DORNER AquaPruf® 7600 SERIES: LPZ Flat Belt End Drive Conveyor

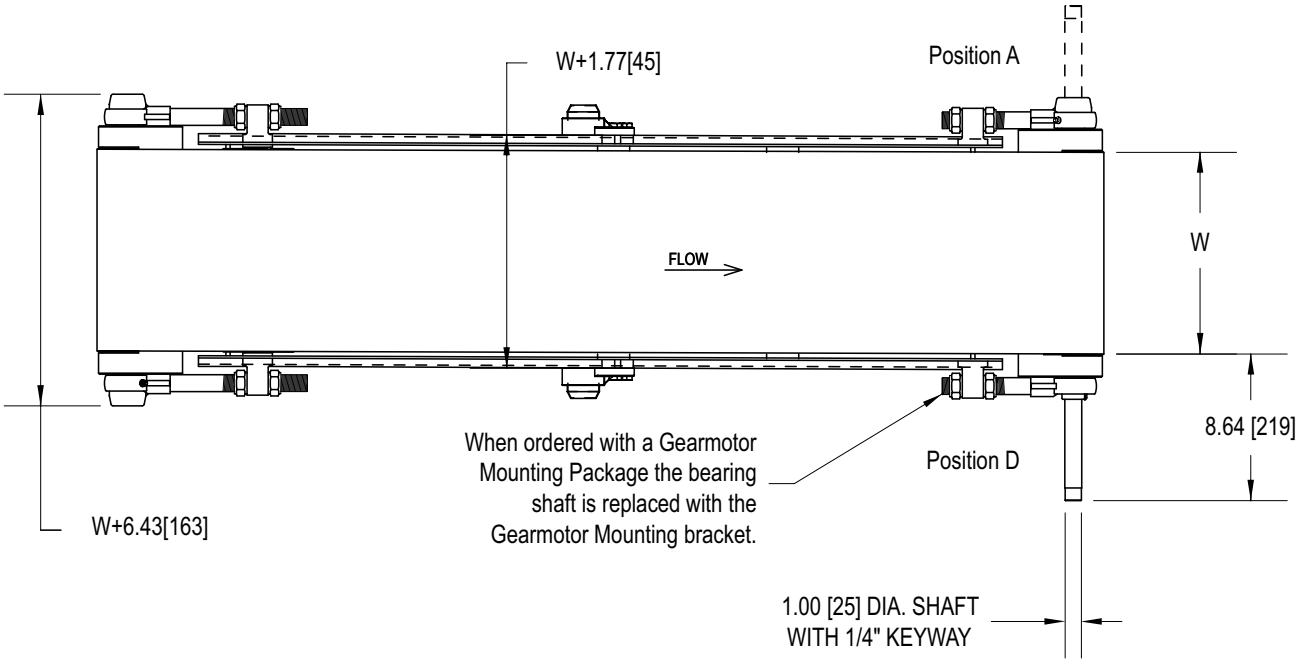

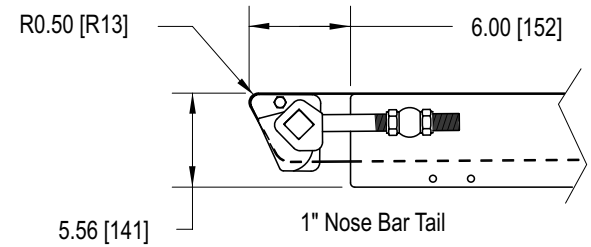

1" Nose Bar Tail

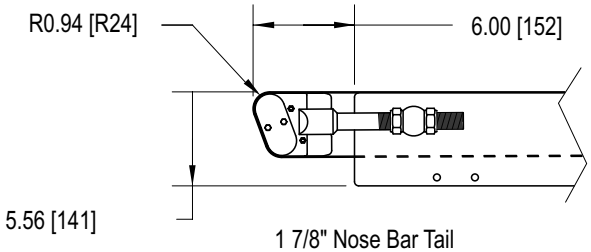

1 7/8" Nose Bar Tail

7600 Flat Available
in 5°, 10° and 15° Angles

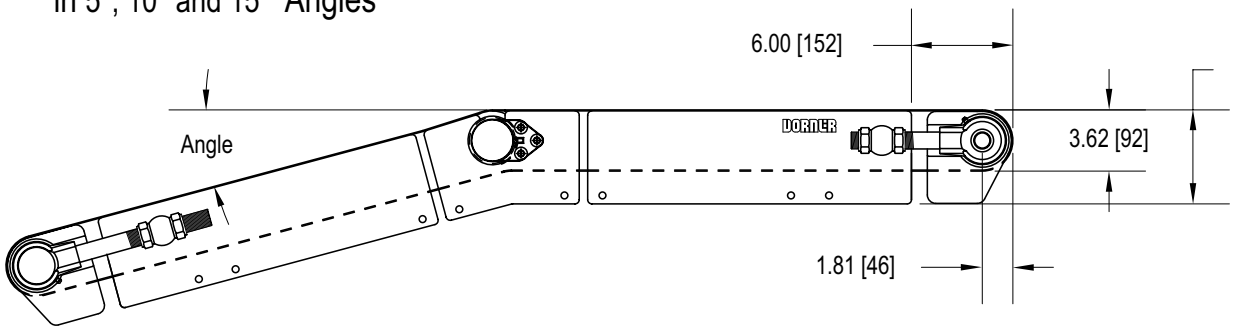

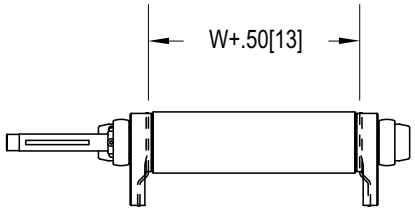

DORNER Performance in motion

DORNER MFG. CORP.
PO Box 20 • 975 Cottonwood Ave
Hartland, WI 53029-0020 USA

INSIDE THE USA
TEL: 800.397.8664
FAX: 800.369.2440

OUTSIDE THE USA
TEL: 262.367.7600
FAX: 262.367.5827

www.dorner.com
info@dorner.com