2200 Precision Move Dual Strand Conveyor

Installation, Maintenance & Parts Manual

DORNER MFG. CORP.
P.O. Box 20 • 975 Cottonwood Ave.
Hartland, WI 53029-0020 USA

INSIDE THE USA
TEL: 1-800-397-8664
FAX: 1-800-369-2440

OUTSIDE THE USA
TEL: 262-367-7600
FAX: 262-367-5827

For other service manuals visit our website at:
www.dorner.com/service_manuals.asp

851-799 Rev. A

Table of Contents

Introduction 3
Warnings – General Safety 4
Product Description 5
Specifications 5
Models: 5
Dual Strand Conveyor 5
Support Stands 5
Conveyor Supports: 5
Maximum Distances: 5
Specifications 6
Table 1: Gearmotor Specifications 6
U.S. Version - Standard Load 6
CE Version - Standard Load 6
U.S. Version - Heavy Load 7
CE Version - Heavy Load 7
Table 2: Belt Speed for Standard Load Fixed Speed Gearmotors 7
U.S. Version (60 Hz Gearmotors) 7
CE Version (50 Hz Gearmotors) 7
Table 3: Belt Speed for Standard Load VFD Gearmotors 8
U.S. Version (60 Hz Gearmotors) 8
CE Version (50 Hz Gearmotors) 8
Table 4: Belt Speed for Heavy Load Fixed Speed Gearmotors 9
U.S. Version (60 Hz Gearmotors) 9
CE Version (50 Hz Gearmotors) 9
Table 5: Belt Speed for Heavy Load VFD Gearmotors... 9
U.S. Version (60 Hz Gearmotors) 9
CE Version (50 Hz Gearmotors) 9
Installation 10
Required Tools 10
Recommended Installation Sequence 10
Conveyors Up to 12ft (3658mm) 10
Conveyors Longer Than 12ft (3658mm) 10
Install Conveyor Tie Kits 10
Install Belt and Bedstrip 11
Attach Conveyor to Stands 12
Mount Motor 12
Preventive Maintenance and Adjustment 13
Required Tools 13
Checklist 13
Lubrication 13
Maintaining Conveyor Belt 13
Troubleshooting 13
Cleaning 13
Conveyor Belt Replacement 13
Single Belt Replacement Option 13
Dual Belt Replacement Option 15
Motor Replacement 16
Gear Reducer Replacement 16
Mid Drive Assembly 17
Mid Drive Cartridge Replacement 17
Tensioner Cam Replacement 19
Service Parts 20
Dual Strand Conveyor 20
Support Stand 22
Corner Support Stand 24
Connector Kit 26
Conveyor Tie Bracket 27
90° Industrial Gearmotors 28
U.S. Version Gearmotors 28
CE Version Gearmotors 28
Conveyor Belt Part Number Configuration 29
Return Policy 30

IMPORTANT

Some illustrations may show guards removed. DO NOT operate equipment without guards.

Upon receipt of shipment:

- Compare shipment with packing slip. Contact factory regarding discrepancies.
- Inspect packages for shipping damage. Contact carrier regarding damage.
- Accessories may be shipped loose. See accessory instructions for installation.

Dorner's Limited Warranty applies.

Dorner has convenient, pre–configured kits of Key Service Parts for all conveyor products. These time saving kits are easy to order, designed for fast installation, and guarantee you will have what you need when you need it. Key Parts and Kits are marked in the Service Parts section of this manual with the Performance Parts Kits logo .

Dorner reserves the right to make changes at any time without notice or obligation.

Warnings – General Safety

⚠ WARNING

The safety alert symbol, black triangle with white exclamation, is used to alert you to potential personal injury hazards.

⚠ DANGER

Climbing, sitting, walking or riding on conveyor will cause severe injury. KEEP OFF CONVEYORS.

⚠ DANGER

DO NOT OPERATE CONVEYORS IN AN EXPLOSIVE ENVIRONMENT.

⚠ WARNING

Exposed moving parts can cause severe injury. LOCK OUT POWER before removing guards or performing maintenance.

⚠ WARNING

Gearmotors may be HOT.

DO NOT TOUCH Gearmotors.

⚠ WARNING

Dorner cannot control the physical installation and application of conveyors. Taking protective measures is the responsibility of the user.

When conveyors are used in conjunction with other equipment or as part of a multiple conveyor system, CHECK FOR POTENTIAL PINCH POINTS and other mechanical hazards before system start-up.

⚠ WARNING

Loosening stand height or angle adjustment screws may cause conveyor sections to drop down, causing severe injury.

SUPPORT CONVEYOR SECTIONS PRIOR TO LOOSENING STAND HEIGHT OR ANGLE ADJUSTMENT SCREWS.

Product Description

Refer to **(Figure 1)** for typical components.

1	Conveyor
2	Gearmotor
3	Support Stand
4	Variable Speed Controller

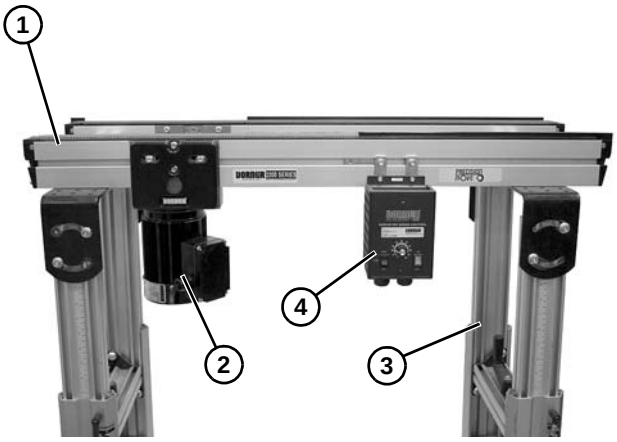

Figure 1

Specifications

Models:

Dual Strand Conveyor

22 D S C M WWW - LLLL M M G - LLLL BB

- BB — Belt Type
- LLLL — Mid Drive Location
- G — Gearmotor Type
- M — Motor Orientation
- M — Motor Side
- LLLL — Conveyor Length
- WWW — Conveyor Width
- M — Documentation Language

Support Stands

22 DS P M WWW - LH UH F

- F — Footing Type
- UH — Tallest Height
- LH — Lowest Height
- WWW — Stand Width
- M — Documentation Language
- P — Post Type

Conveyor Supports:

Maximum Distances:

1 = 18" (457 mm)

2 = 12" (305 mm)

3 = 12 ft (3658 mm)***

4 = 18" (457 mm)

*** For conveyors longer than 12 ft (3658 mm), install support at joint.

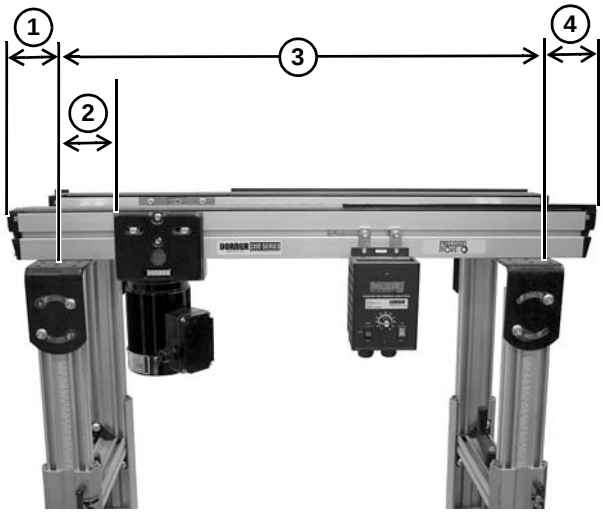

Figure 2

Specifications

Specifications

Conveyor Width Reference (WWW)	160	240	320	400	480
Conveyor Width	6.30" (160 mm)	9.45" (240 mm)	12.60" (320 mm)	15.74" (400 mm)	18.90" (480 mm)
Maximum Load	500 lb. (227 kg)				
Conveyor Startup Torque	7 in-lb (0.79 Nm)				
Belt Travel	7.88" (200 mm) per revolution of pulley				
Maximum Belt Speed	114 ft./minute (35 M/min)				
Conveyor Length Reference	0275 - 7500				
Conveyor Length	275 mm - 7500 mm (10.38" - 295.27")				

Table 1: Gearmotor Specifications

U.S. Version - Standard Load

Item	Standard Load Gearmotors		
	Single Phase	**Three Phase**	**VFD Variable Speed**
Output Power	0.25 Hp (0.19 kW)	0.38 Hp (0.28 kW)	0.38 Hp (0.28 kW)
Input Voltage	115 VAC	208-230/460 VAC	208-230/460 VAC
Input Frequency	60 Hz	60 Hz	10-60 Hz
Input Current (Amperes)	3.1	1.9/0.95	1.9/0.95
Gearmotor Ratio	10:1, 20:1, 40:1, 60:1		
Frame Size	NEMA 42 CZ C Face		
Motor Type	Totally enclosed, fan cooled		

CE Version - Standard Load

Item	Standard Load Gearmotors		
	Single Phase	**Three Phase**	**VFD Variable Speed**
Output Power	0.18 kW	0.25 kW	0.25 kW
Input Voltage	230 Volts AC	230/460 Volts AC	230 Volts AC
Input Frequency	50 Hz	50 Hz	25-63 Hz
Input Current (Amperes)	1.6	1.4/0.8	1.4
Gearmotor Ratio	10:1, 20:1, 40:1, 60:1		
Frame Size	IEC 63 B5 C Face		
Protection Rating	IP 55 Totally enclosed, fan cooled		

U.S. Version - Heavy Load

Item	Heavy Load Gearmotors		
	Single Phase	Three Phase	VFD Variable Speed
Output Power	0.50 Hp (0.37 kW)	0.38 Hp (0.28 kW)	0.38 Hp (0.28 kW)
Input Voltage	115 VAC	208-230/460 VAC	208-230/460 VAC
Input Frequency	60 Hz	60 Hz	10-60 Hz
Input Current (Amperes)	5.7	2.1-2/1.0	2.6/1.3
Gearmotor Ratio	10:1, 20:1, 40:1, 60:1		
Frame Size	NEMA 56 C Face		
Motor Type	Totally enclosed, fan cooled		

CE Version - Heavy Load

Item	Heavy Load Gearmotors		
	Single Phase	Three Phase	VFD Variable Speed
Output Power	0.37 kW		
Input Voltage	230 Volts AC	230/460 Volts AC	230 Volts AC
Input Frequency	50 Hz	50 Hz	25-63 Hz
Input Current (Amperes)	2.6	2.1/1.2	2.1/1.2
Gearmotor Ratio	10:1, 20:1, 40:1, 60:1		
Frame Size	IEC 71 B5 C Face		
Protection Rating	IP 55 Totally enclosed, fan cooled		

Table 2: Belt Speed for Standard Load Fixed Speed Gearmotors

U.S. Version (60 Hz Gearmotors)

Part Number	RPM	In-Lb	N-m	Belt Speed	
				Ft/min	M/min
62M060ES4(vp)FN	29	226	25.5	19	5.8
62M040ES4(vp)FN	43	237	26.8	28	8.5
62M020ES4(vp)FN	86	142	16.0	56	17.1
62M010ES4(vp)FN	173	78	18.8	114	34.7

(vp) = voltage and phase

11 = 115 V, 1 phase

23 = 208-230/460 V, 3 phase

CE Version (50 Hz Gearmotors)

Part Number	RPM	N-m	Belt Speed	
			Ft/min	M/min
62Z060ES4(vp)FN	23	26.4	15	4.6
62Z040ES4(vp)FN	35	28.9	23	7
62Z020ES4(vp)FN	70	19.4	46	14
62Z010ES4(vp)FN	140	10.7	92	28

(vp) = voltage and phase

21 = 230 V, 1 phase

23 = 230 V, 3 phase

43 = 400 V, 3 phase

Table 3: Belt Speed for Standard Load VFD Gearmotors

U.S. Version (60 Hz Gearmotors)

Part Number	RPM	In-Lb	N-m	Belt Speed	
				Ft/min	M/min
62M060ES4(vp)EN	29	226	25.5	1.9 - 19	0.6 - 5.8
62M040ES4(vp)EN	43	237	26.8	2.8 - 28	0.9 - 8.5
62M020ES4(vp)EN	86	142	16.0	5.6 - 56	1.7 - 17.1
62M010ES4(vp)EN	173	78	18.8	11 - 114	3.4 - 34.7

(vp) = voltage and phase

11 = 115 V, 1 phase

23 = 208-230/460 V, 3 phase

CE Version (50 Hz Gearmotors)

Part Number	RPM	N-m	Belt Speed	
			Ft/min	M/min
62Z060ES4(vp)EN	23	26.4	7.5 - 19	2.3 - 5.8
62Z040ES4(vp)EN	35	28.9	12 - 29	3.7 - 8.8
62Z020ES4(vp)EN	70	19.4	23 - 58	7.0 - 17.7
62Z010ES4(vp)EN	140	10.7	46 - 116	14 - 35.3

(vp) = voltage and phase

21 = 230 V, 1 phase

23 = 230 V, 3 phase

43 = 400 V, 3 phase

Table 4: Belt Speed for Heavy Load Fixed Speed Gearmotors

U.S. Version (60 Hz Gearmotors)

Part Number	RPM	In-Lb	N-m	Belt Speed	
				Ft/min	M/min
32M060ES4(vp)FN	29	226	25.5	19	5.8
32M040ES4(vp)FN	43	247	27.9	28	8.5
32M020ES4(vp)FN	86	248	27.9	56	17.1
32M010ES4(vp)FN	173	156	17.6	114	34.7

(vp) = voltage and phase

11 = 115 V, 1 phase

23 = 208-230/460 V, 3 phase

CE Version (50 Hz Gearmotors)

Part Number	RPM	N-m	Belt Speed	
			Ft/min	M/min
62Z060ES4(vp)FN	23	26.4	15	4.6
62Z040ES4(vp)FN	35	28.9	23	7
62Z020ES4(vp)FN	70	19.4	46	14
62Z010ES4(vp)FN	140	10.7	92	28

(vp) = voltage and phase

21 = 230 V, 1 phase

23 = 230 V, 3 phase

43 = 400 V, 3 phase

Table 5: Belt Speed for Heavy Load VFD Gearmotors

U.S. Version (60 Hz Gearmotors)

Part Number	RPM	In-Lb	N-m	Belt Speed	
				Ft/min	M/min
32M060ES423EN	29	226	25.5	1.9 - 19	0.6 - 5.8
32M040ES423EN	43	247	27.9	2.8 - 28	0.9 - 8.5
32M020ES423EN	86	248	27.9	5.6 - 56	1.7 - 17.1
32M010ES423EN	173	156	17.6	11 - 114	3.4 - 34.7

CE Version (50 Hz Gearmotors)

Part Number	RPM	N-m	Belt Speed	
			Ft/min	M/min
62Z060ES423EN	23	26.4	7.5 - 19	2.3 - 5.8
62Z040ES423EN	35	28.9	12 - 29	3.7 - 8.8
62Z020ES423EN	70	19.4	23 - 58	7.0 - 17.7
62Z010ES423EN	140	10.7	46 - 116	14 - 35.3

Installation

NOTE
Conveyor MUST be mounted straight, flat and level within confines of conveyor. Use a level for setup.

Required Tools

- 4 mm Hex Wrench
- 6 mm Hex Wrench
- 8 mm Hex Wrench
- 7/16" Wrench
- 9/16" Wrench

Recommended Installation Sequence

- Assemble conveyor (if applicable)
- Install conveyor tie kits (if applicable)
- Attach conveyor to stands
- Mount motor

Conveyors Up to 12ft (3658mm)

No conveyor assembly required.

Conveyors Longer Than 12ft (3658mm)

Install Conveyor Tie Kits

NOTE
*Be sure all frame sections **(Figure 3, item 1)** are properly supported during assembly.*

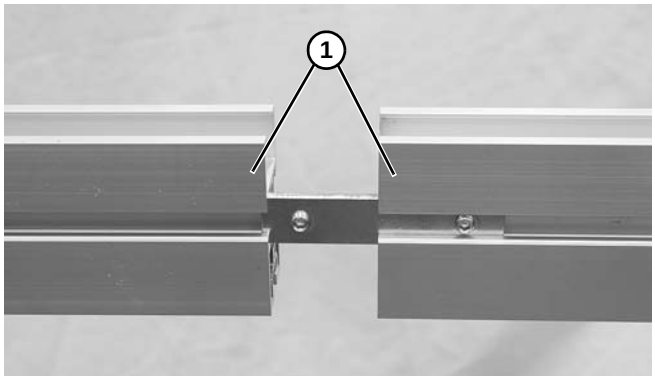

Figure 3

NOTE
Tie bars can be used in either outer or inner slots.

1. Join both conveyor sections, and tighten set screws **(Figure 4, item 1)** on both sides. Tighten all set screws 1/4 turn past contact with frame.

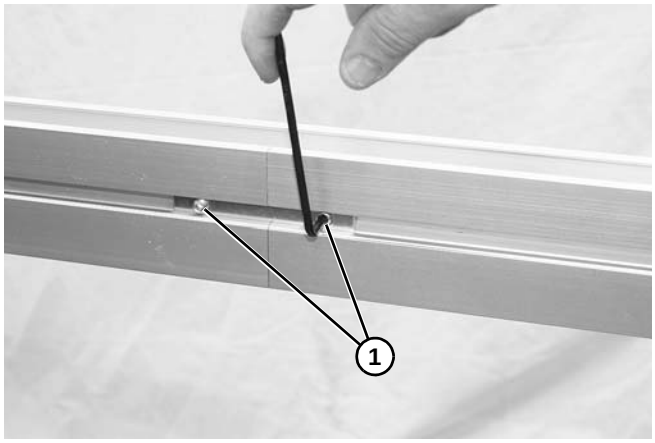

Figure 4

Install Belt and Bedstrip

1. Loop belt **(Figure 5, item 1)** around roller assembly **(Figure 5, item 2)**. Insert roller assembly into end cap **(Figure 5, item 3)**. Insert roller pin **(Figure 5, item 4)** into roller assembly.

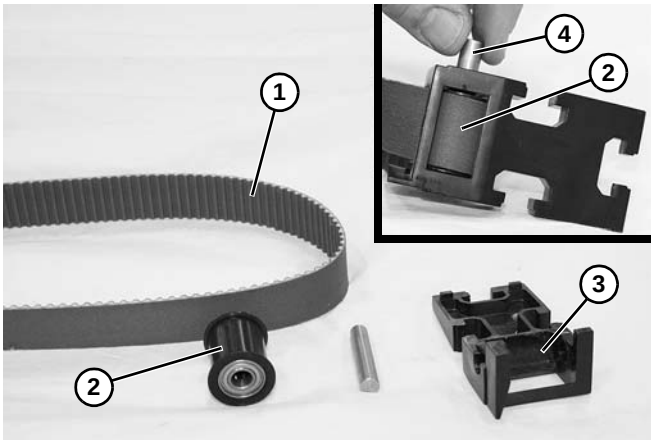

Figure 5

2. Snap the end cap **(Figure 6, item 1)** into the conveyor **(Figure 6, item 2)** on both ends. Make sure that the high side **(Figure 6, item 3)** faces out. Ensure end cap is seated tight against frame on both sides.

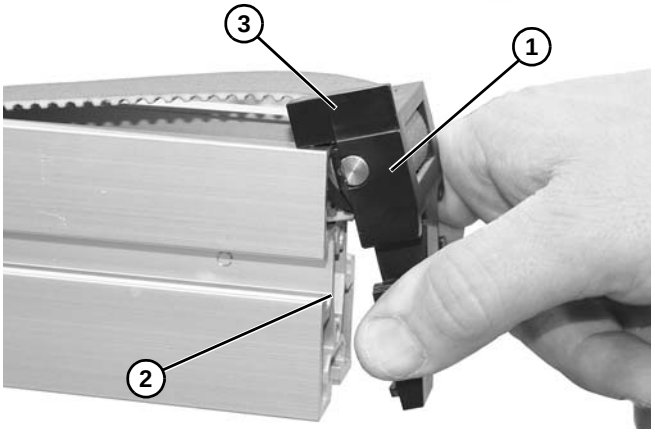

Figure 6

3. Install the bedstrip **(Figure 7, item 1)** between the conveyor **(Figure 7, item 2)** and belt **(Figure 7, item 3)**. Make sure that the high side **(Figure 7, item 4)** faces out and snap bedstrip into place.

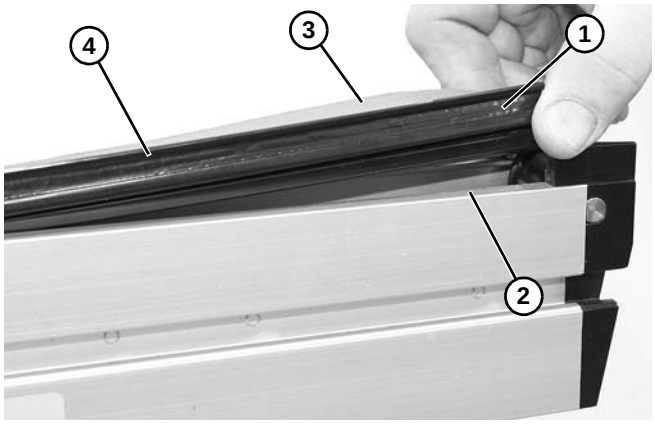

Figure 7

4. Rotate the tensioner cams **(Figure 8, item 1)** in the direction indicated to tension belt.

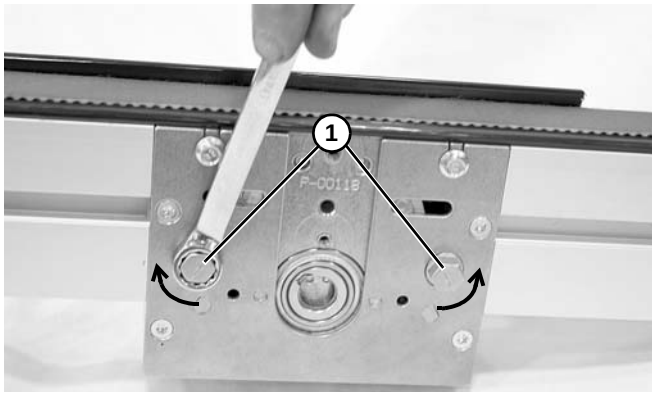

Figure 8

Installation

Attach Conveyor to Stands

NOTE
For detailed assembly instruction, please see your appropriate support stand manual.

1. Assemble washer **(Figure 9, item 1)** onto socket head screw **(Figure 9, item 2)**. Thread bolt into slide-in nut **(Figure 9, item 3)**. Repeat for a second bolt, washer, and nut.

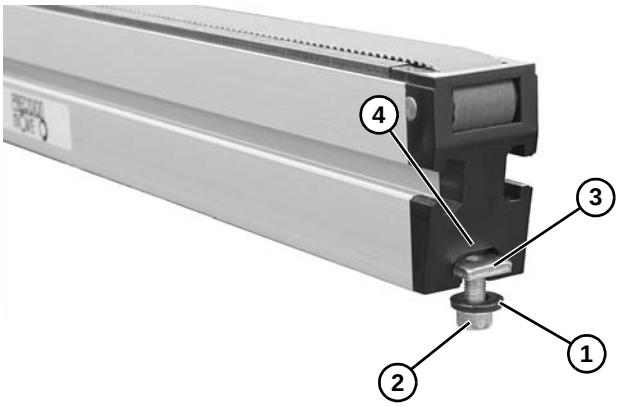

Figure 9

2. Insert bolt and nut assemblies through end cap **(Figure 9, item 4)** and into conveyor channel. Slide one down the channel, keeping the second close to the end of the conveyor.
3. Raise stand leg **(Figure 10, item 1)** to bottom of conveyor. Make sure top plate mounting screws **(Figure 10, item 2)** align into channel.

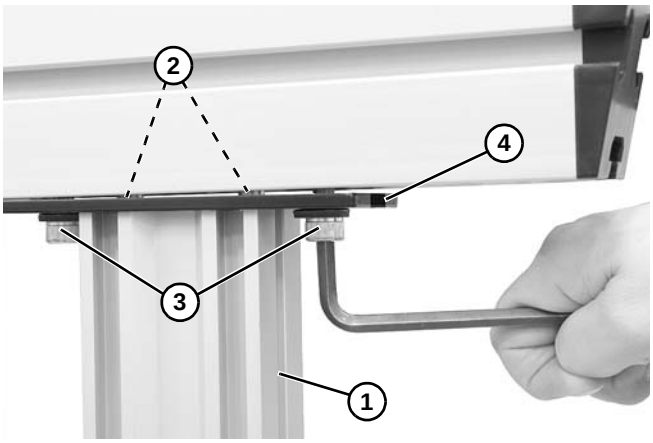

Figure 10

4. Slide mounting hardware **(Figure 10, item 3)** into slot **(Figure 10, item 4)** on both sides of top plate and tighten.
5. Repeat for other leg of stand.

Mount Motor

1. Attach the motor **(Figure 11, item 1)** to the gear reducer **(Figure 11, item 2)** with hex flange screws **(Figure 11, item 3)**. Tighten screws.

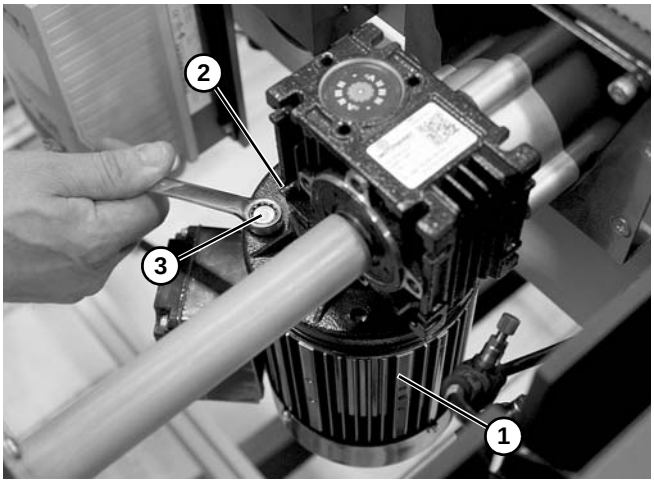

Figure 11

Required Tools

- 4 mm Hex Wrench
- 6 mm Hex Wrench
- 8 mm Hex Wrench
- 7/16" Wrench
- 9/16" Wrench

Checklist

- Keep service parts on hand (see “Service Parts” section for recommendations)
- Keep supply of belt cleaner
- Clean entire conveyor and mid drive while disassembled
- Replace worn or damaged parts

Lubrication

No lubrication is required. Replace roller assemblies if worn.

Maintaining Conveyor Belt

Troubleshooting

Inspect conveyor belt for:

- Surface cuts or wear
- Stalling or slipping

Surface cuts and wear indicate:

- Sharp or heavy parts impacting belt
- Jammed parts
- Foreign material inside the conveyor
- Improperly positioned accessories
- Bolt-on guiding is pinching belt

Stalling or slipping indicates:

- Excessive load on belt
- Conveyor belt not properly tensioned
- Intermittent jamming or drive train problems

Cleaning

Use Dorner Belt Cleaner. Mild soap and water may also be used. Do not soak the belt.

Conveyor Belt Replacement

⚠ WARNING

Exposed moving parts can cause severe injury. LOCK OUT POWER before removing guards or performing maintenance.

- For Single Conveyor Belt, See “Single Belt Replacement Option” on page 13
- For Dual Conveyor Belt, See “Dual Belt Replacement Option” on page 15

Single Belt Replacement Option

1. Rotate tensioner cams **(Figure 12, item 1)** in the direction indicated to release tension on belt.

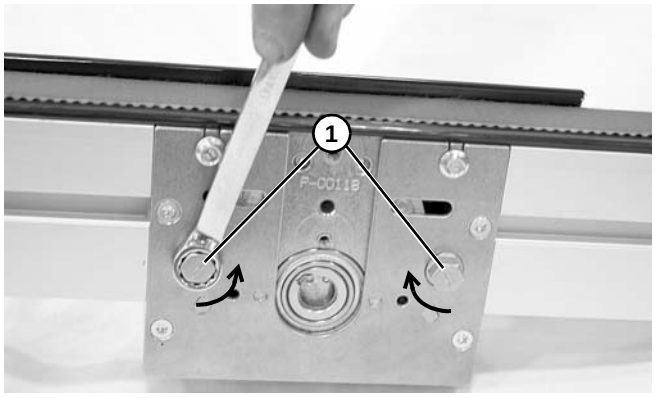

Figure 12

2. Remove the bedstrip **(Figure 13, item 1)** from between the conveyor **(Figure 13, item 2)** and belt **(Figure 13, item 3)**.

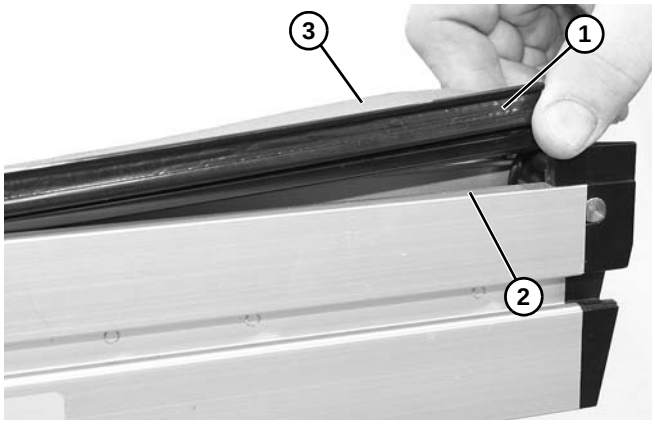

Figure 13

3. Remove the end cap **(Figure 14, item 1)** from the conveyor **(Figure 14, item 2)** on both ends.

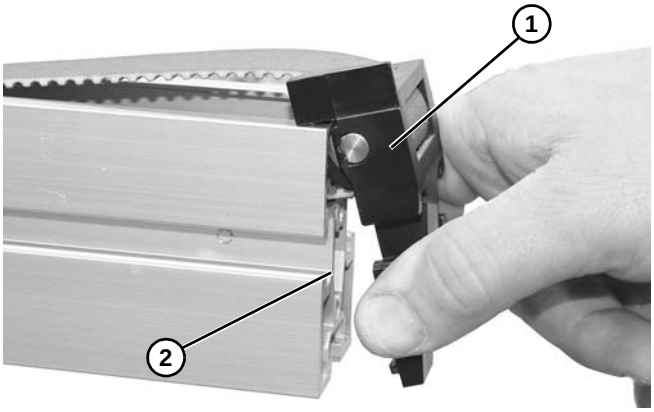

Figure 14

4. Remove button head screws **(Figure 15, item 1)**.

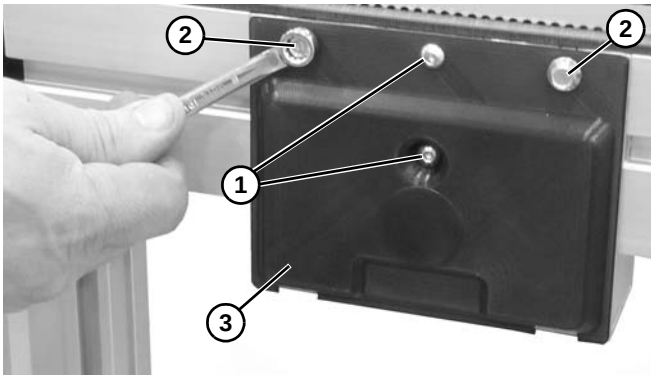

Figure 15

5. Loosen hex flange screws **(Figure 15, item 2)** on both sides of conveyor. Remove mid drive cover **(Figure 15, item 3)**.
6. Remove retaining ring on opposite conveyor.
7. Using a punch and hammer, carefully tap the shaft **(Figure 16, item 1)** out of the mid drive assembly.

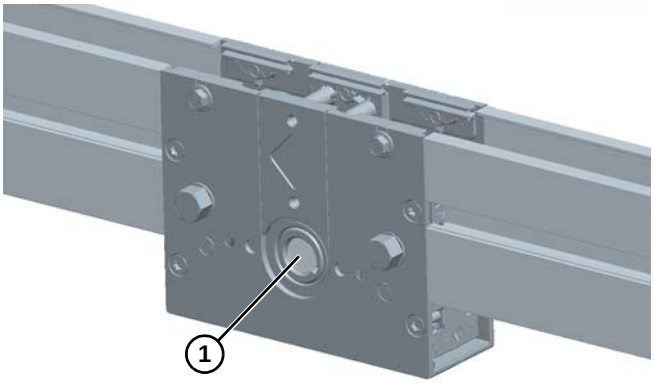

Figure 16

8. While pressing in on hex flange screws, remove mid drive cartridge **(Figure 17, item 1)** from mid drive assembly **(Figure 17, item 2)**.

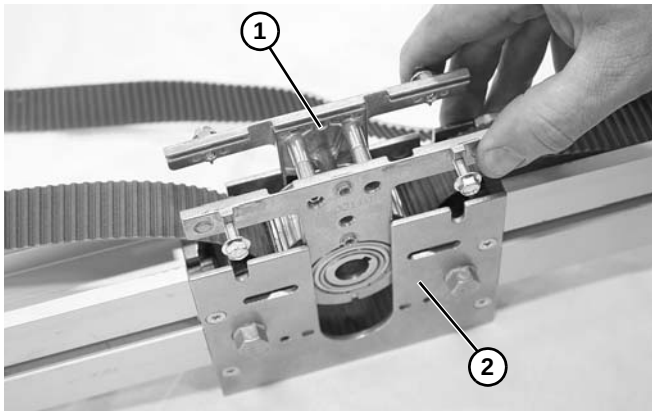

Figure 17

9. Remove belt assembly from mid drive and conveyor channel.
10. Remove roller pin **(Figure 18, item 1)** and roller assembly with belt **(Figure 18, item 2)** from end cap **(Figure 18, item 3)** on both ends of belt.

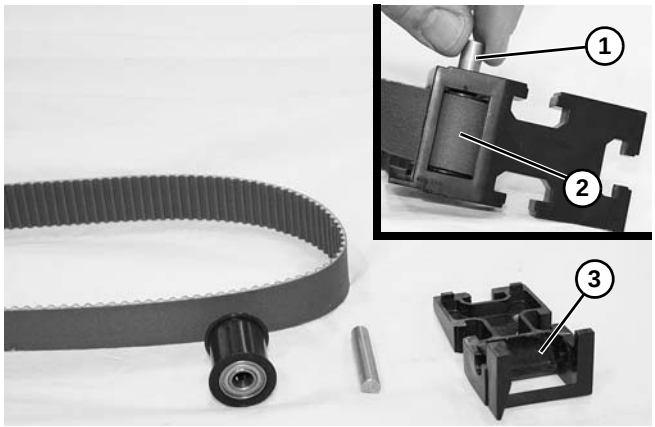

Figure 18

11. Inspect roller assemblies and end caps for wear or damage. Replace as needed.
12. Install new belt in the reverse order of removal.
13. Rotate the tensioner cams **(Figure 19, item 1)** in the direction indicated to tension belt.

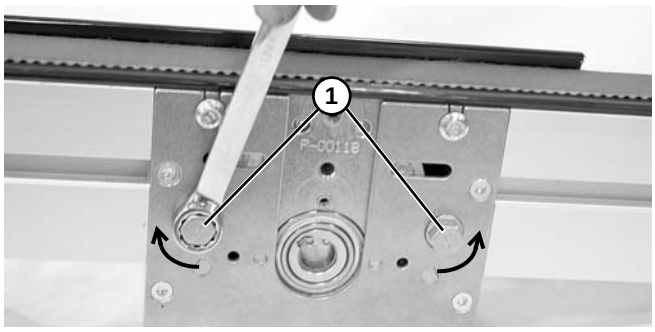

Figure 19

Dual Belt Replacement Option

1. Remove hex flange screws **(Figure 20, item 1)** connecting the motor **(Figure 20, item 2)** to the gear reducer **(Figure 20, item 3)**.

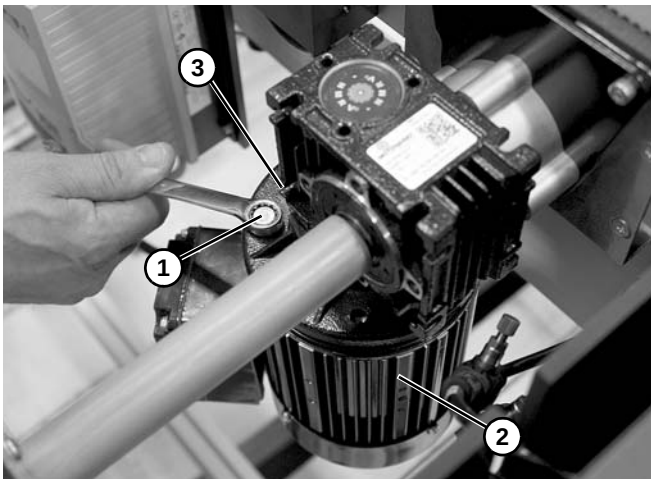

Figure 20

2. Rotate tensioner cams **(Figure 21, item 1)** in the direction indicated to release tension on belt.

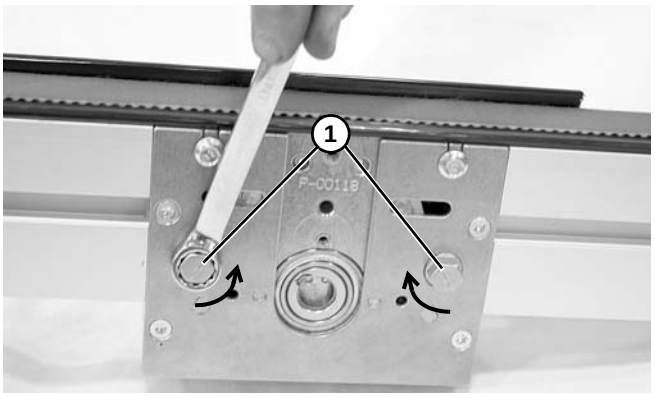

Figure 21

3. Remove the bedstrip **(Figure 22, item 1)** from between the conveyor **(Figure 22, item 2)** and belt **(Figure 22, item 3)**.

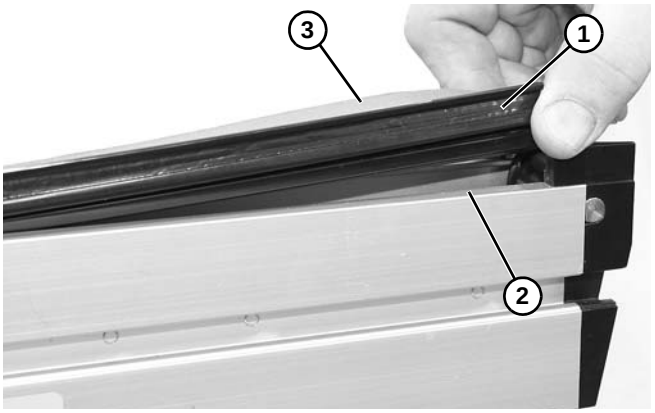

Figure 22

4. Remove the end cap **(Figure 23, item 1)** from the conveyor **(Figure 23, item 2)** on both ends.

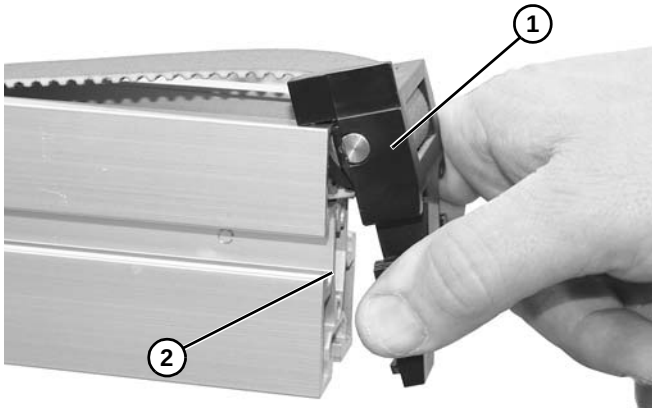

Figure 23

5. Loosen inner and outer screws **(Figure 24, item 1)**. While pressing in on hex flange screws, lift mid drive assembly **(Figure 24, item 2)** from conveyors.

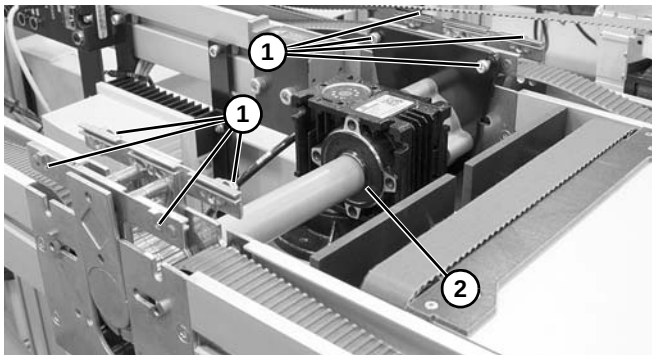

Figure 24

6. Remove belt assembly from mid drive and conveyor channel.
7. Remove roller pin **(Figure 25, item 1)** and roller assembly with belt **(Figure 25, item 2)** from end cap **(Figure 25, item 3)** on both ends of belt.

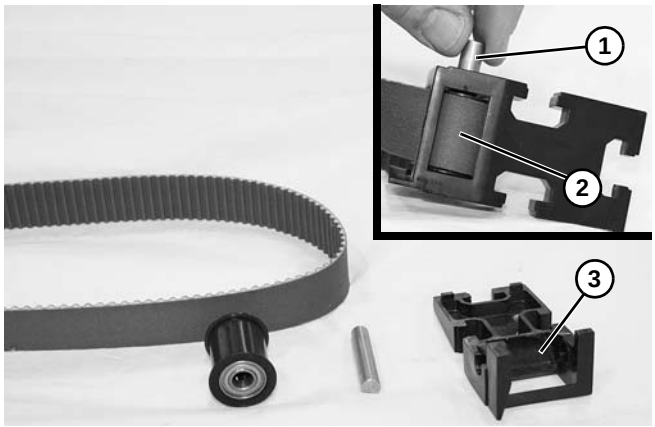

Figure 25

8. Inspect roller assemblies and end caps for wear or damage. Replace as needed.
9. Install new belt in the reverse order of removal.
10. Rotate the tensioner cams **(Figure 26, item 1)** in the direction indicated to tension belt.

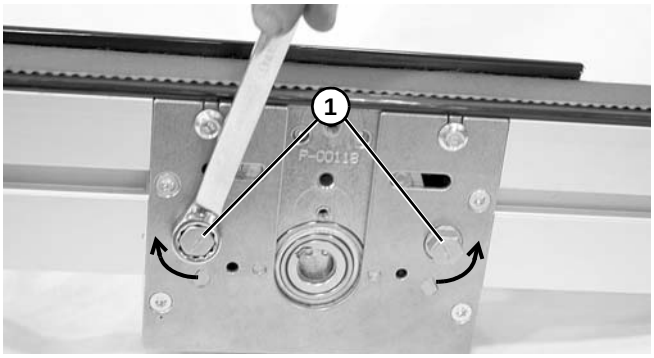

Figure 26

Motor Replacement

⚠ WARNING

Exposed moving parts can cause severe injury. LOCK OUT POWER before removing guards or performing maintenance.

1. Remove hex flange screws **(Figure 27, item 1)** connecting the motor **(Figure 27, item 2)** to the gear reducer **(Figure 27, item 3)**.

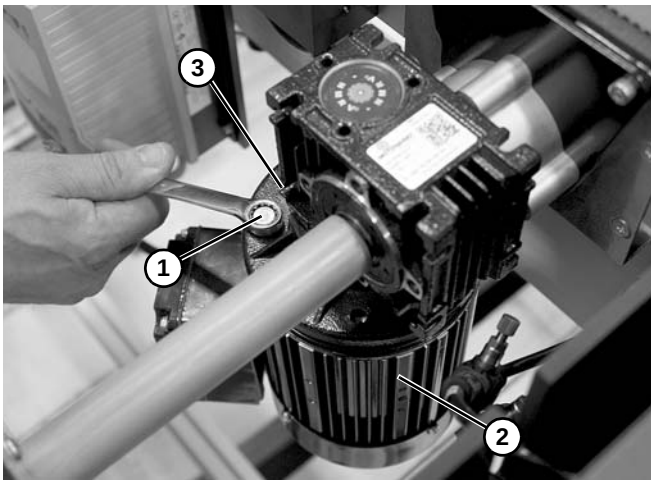

Figure 27

2. If the shaft of the motor is seized in the gear reducer, install hex flange screws **(Figure 28, item 1)** into the threaded holes of the gear reducer. Turn screws evenly clockwise to free motor from gear reducer.

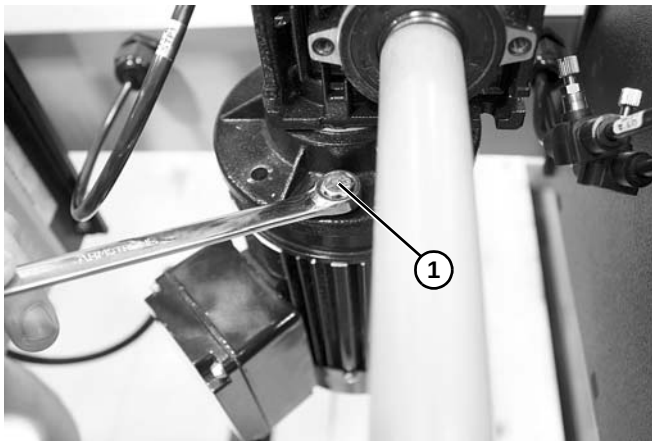

Figure 28

Gear Reducer Replacement

⚠ WARNING

Exposed moving parts can cause severe injury. LOCK OUT POWER before removing guards or performing maintenance.

1. Remove motor. See "Motor Replacement" on page 16
2. Remove button head screws **(Figure 29, item 1)**.

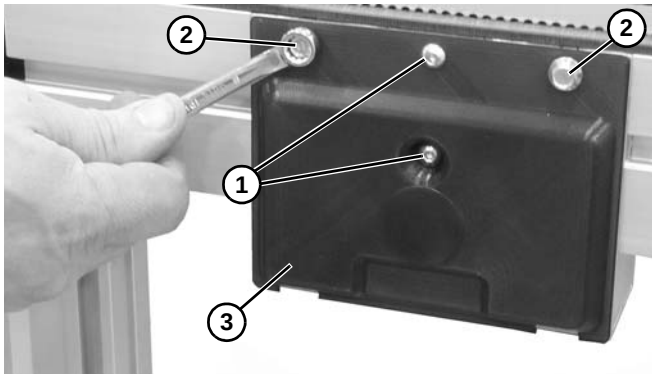

Figure 29

3. Remove hex flange screws **(Figure 29, item 2)** and mid drive cover **(Figure 29, item 3)**.
4. Remove retaining ring.

5. From opposite side, using a punch and hammer, carefully tap the shaft **(Figure 30, item 1)** out of the mid drive assembly.

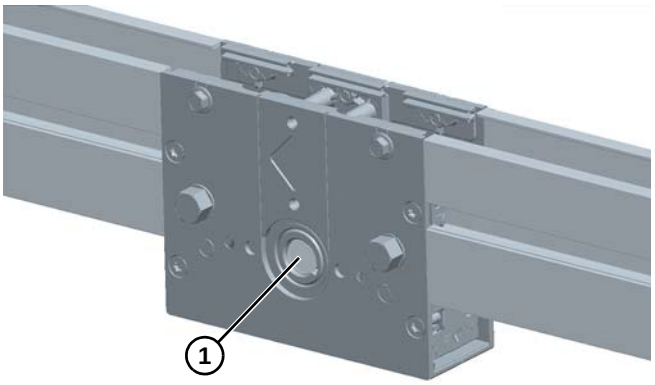

Figure 30

6. Remove flat screws **(Figure 31, item 1)**, mounting plate **(Figure 31, item 2)**, and stand-off extrusion **(Figure 31, item 3)** from gear reducer.

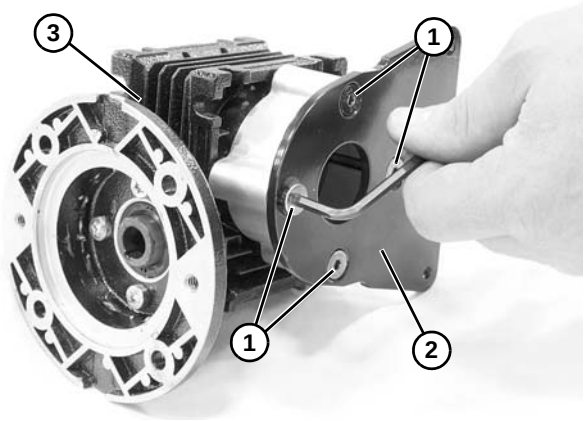

Figure 31

7. Install new gear reducer and assemble in reverse order of removal.

Mid Drive Assembly

⚠ WARNING

Exposed moving parts can cause severe injury. LOCK OUT POWER before removing guards or performing maintenance.

Mid Drive Cartridge Replacement

1. Remove motor. See "Motor Replacement" on page 16
2. Remove button head screws **(Figure 32, item 1)**.

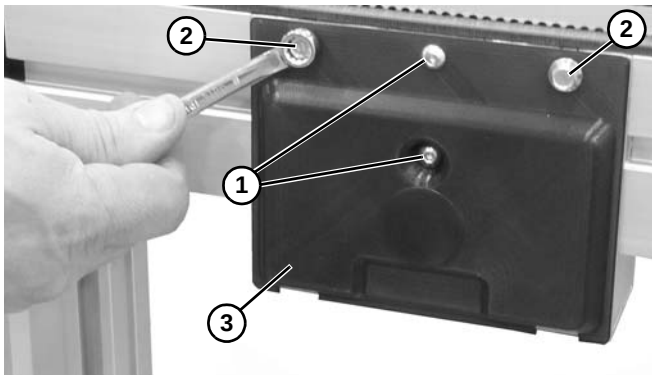

Figure 32

3. Remove hex flange screws **(Figure 32, item 2)** and mid drive cover **(Figure 32, item 3)**. Replace hex flange screws **(Figure 32, item 2)**, but do not tighten.
4. Repeat steps 2 and 3 for cover on opposite conveyor.
5. Rotate tensioner cams **(Figure 33, item 1)** in the direction indicated to release tension on belt.

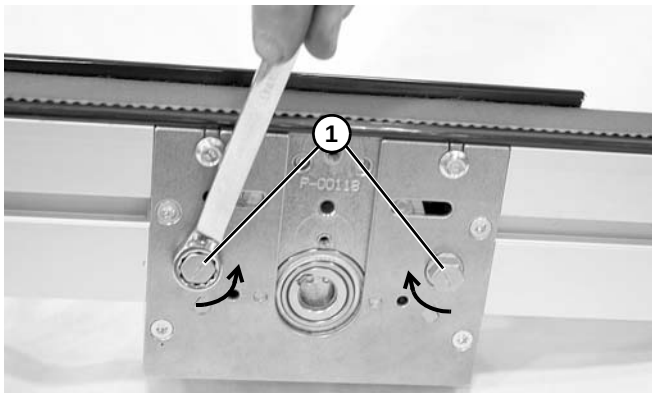

Figure 33

6. Remove the bedstrip **(Figure 34, item 1)** from between the conveyor **(Figure 34, item 2)** and belt **(Figure 34, item 3)**.

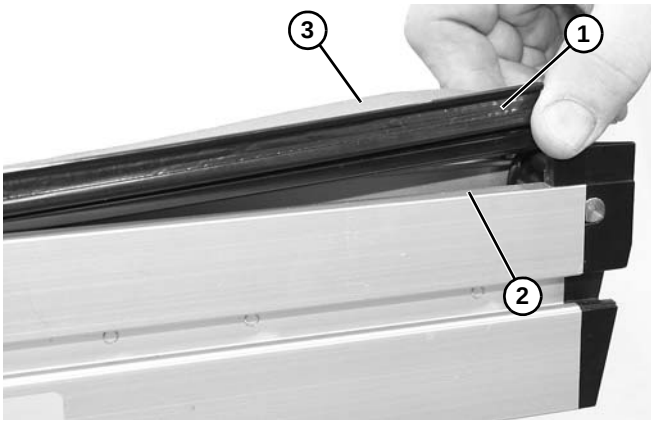

Figure 34

7. Remove the end cap **(Figure 35, item 1)** from the conveyor **(Figure 35, item 2)** on both ends.

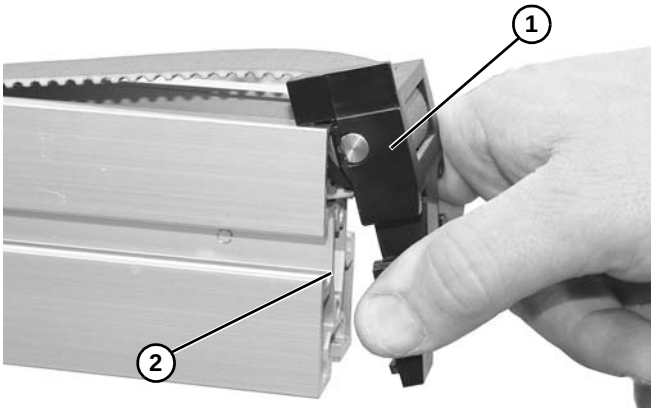

Figure 35

8. Remove retaining ring.
9. Using a punch and hammer, carefully tap the shaft **(Figure 36, item 1)** out of the mid drive assembly.

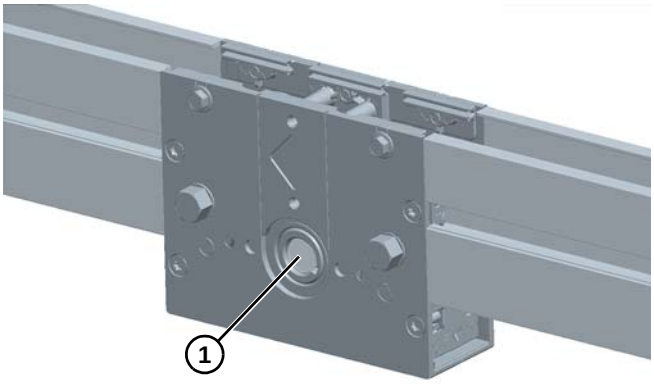

Figure 36

10. Remove mid drive cartridge:

    a. **Non-Drive Side:** Loosen hex flange screws **(Figure 37, item 1)**. While pressing in on hex flange screws lift mid drive cartridge **(Figure 37, item 2)** from mid drive assembly **(Figure 37, item 3)**.

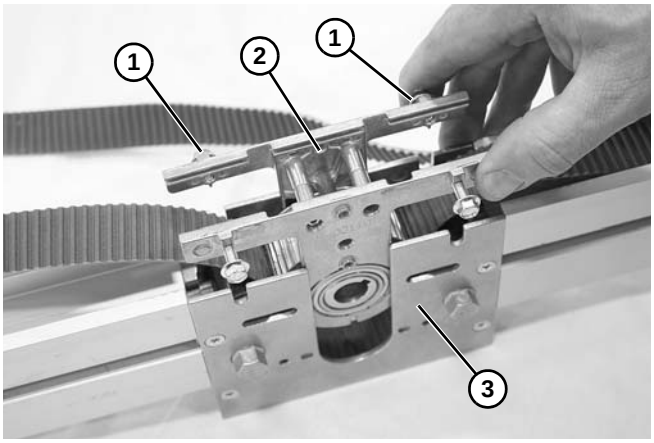

Figure 37

    b. **Drive Side:** Remove hex flange screws **(Figure 38, item 1)**. Press in on hex flange screws **(Figure 38, item 2)** and lift mid drive cartridge **(Figure 38, item 3)** from mid drive assembly **(Figure 38, item 4)**.

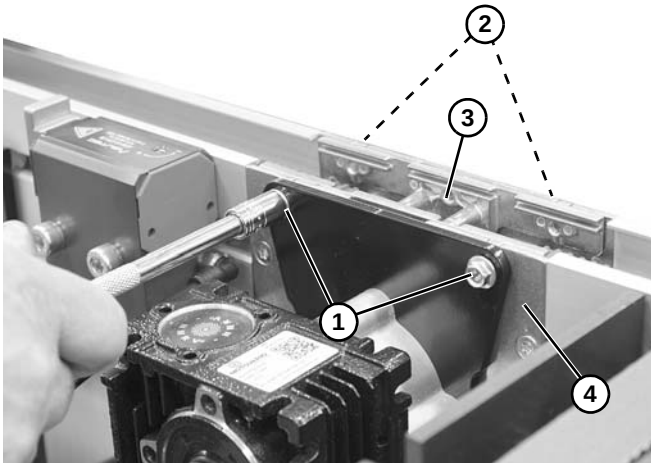

Figure 38

11. Inspect mid drive cartidge for wear or damage and replace as needed.
12. Installation is the reverse order of removal.

Tensioner Cam Replacement

1. Remove motor. See "Motor Replacement" on page 16
2. Remove mid drive cartridge. See "Mid Drive Cartridge Replacement" on page 17
3. Remove belt assembly from mid drive and conveyor channel.
4. Remove torx screws **(Figure 39, item 1)** and mid drive side plate **(Figure 39, item 2)**.

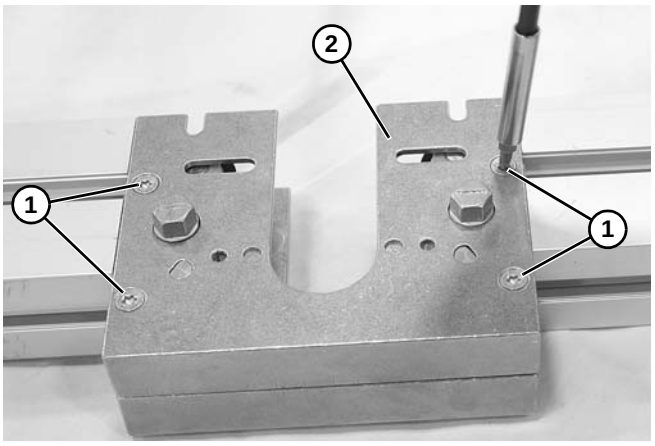

Figure 39

5. Remove tensioner block assemblies **(Figure 40, item 1)**.

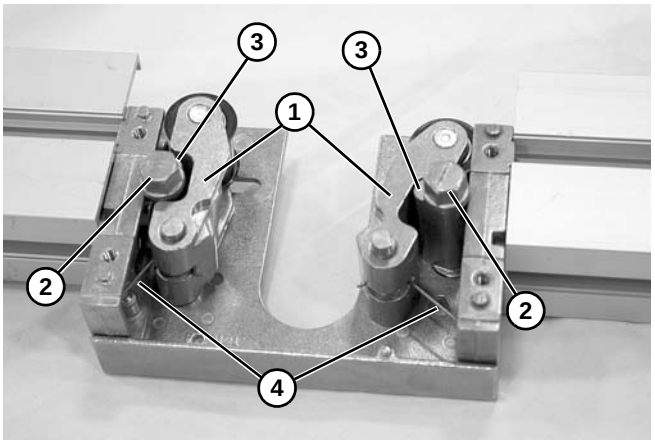

Figure 40

6. Remove tensioner cams **(Figure 40, item 2)**. Inspect for wear and replace as needed.
7. Remove roller pin **(Figure 41, item 1)**, roller assembly **(Figure 41, item 2)**, tensioner axle **(Figure 41, item 3)** and tensioner spring **(Figure 41, item 4)** from tensioner block.

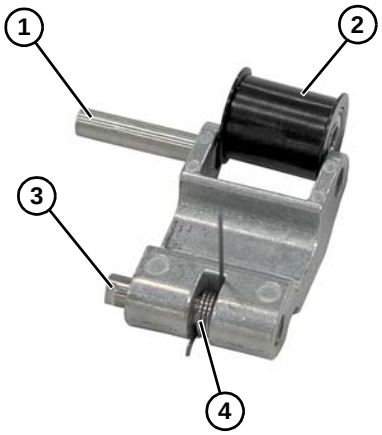

Figure 41

8. Inspect and replace worn or damaged parts.

NOTE
*When installing tensioner block assemblies **(Figure 40, item 1)** into side plate, make sure that the tensioner cam lobes **(Figure 40, item 3)** are facing up.*

9. Assemble components in the reverse order of removal. Ensure that the springs are installed correctly; note the direction of the long leg as shown in **(Figure 40, item 4)**

Service Parts

NOTE
For replacement parts other than those shown in this section, contact an authorized Dorner Service Center or the factory. Key Service Parts and Kits are identified by the Performance Parts Kits logo . Dorner recommends keeping these parts on hand.

Dual Strand Conveyor

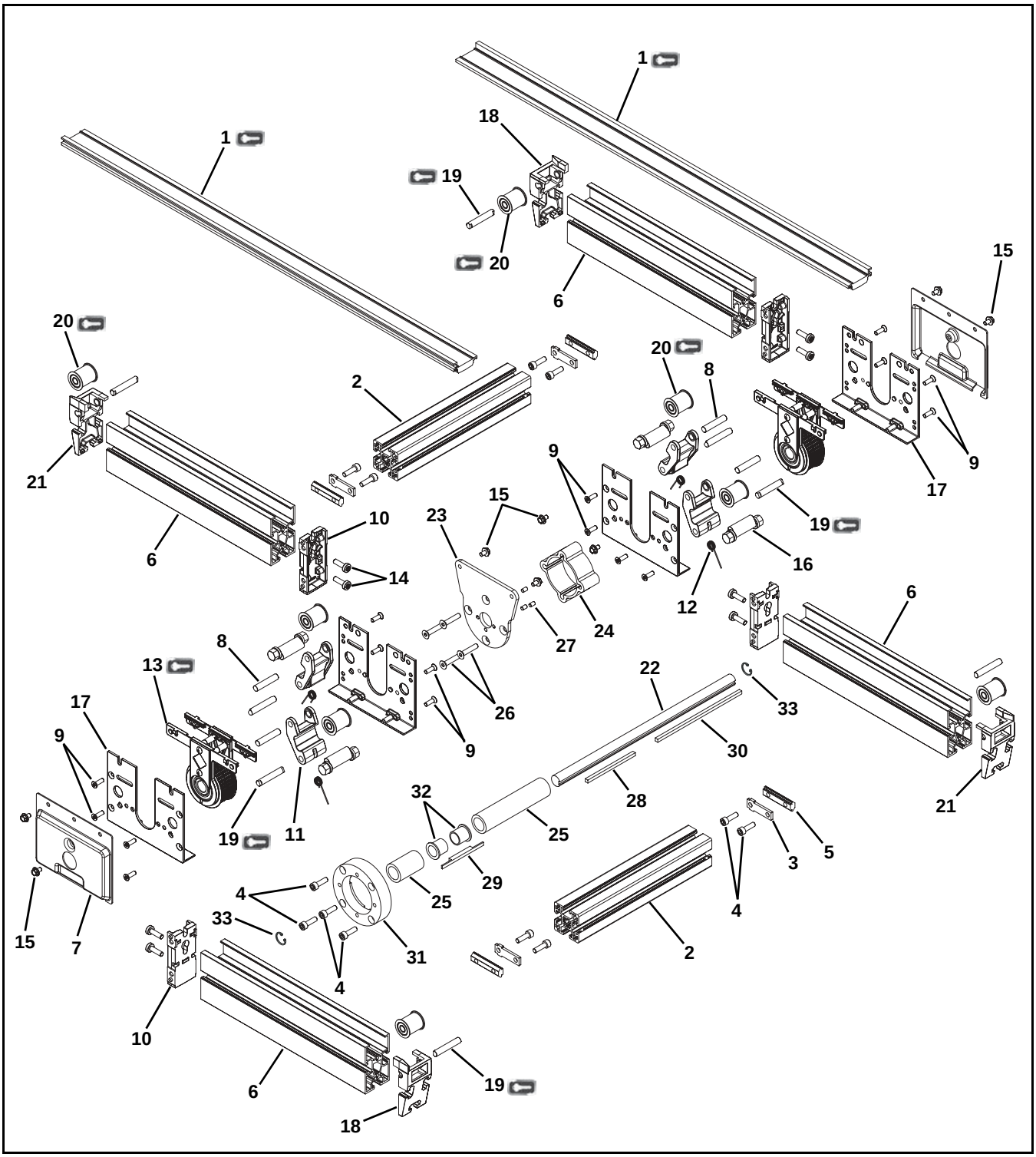

Item	Part Number	Description
1	835-001	Bedstrip, High Side
2	205563-WWW	Crossmember
3	204537	Key Bar
4	920620M	Socket Head Screw, M6-1.00 x 20mm
5	639717M	Drop-In Tee Bar
6	203580-LLLLL	Frame Rail
7	204547	Mid Drive Cover
8	835-133	Tensioner Axle
9	835-122	Torx Screw, M5 x 12
10	835-118	Mid Drive End Cover
11	835-132	Tensioner Block
12	835-130	Tensioner Spring
13	835-007	Mid Drive Cartridge
14	807-2668	Torx Screw, M6-1.00 x 20mm
15	807-2669	Hex Flange Screw, M5-0.80 x 20mm
16	835-131	Tensioner Cam
17	835-134	Mid Drive Side Plate
18	835-125	Right End Cap with High Side
19	835-127	Roller Pin
20	835-101	Roller Assembly
21	835-124	Left End Cap with High Side
22	204543-WWW	Shaft
23	204541	Mounting Plate
24	202270-00113	Stand-Off Extrusion
25	204544-LLLLL	Shaft Guard
26	930640M	Flat Screw, M6-1.00 x 40 mm for 42CZ C Faced Motors Only
	930630M	Flat Screw, M6-1.00 x 30 mm for 56 C Faced Motors Only
27	913-401	Dowel Pin
28	205561-WWW	Square Key for 42CZ C Faced Motors Only
29	204542	Square Key for 56 C Faced Motors Only
	204431	Square Key for IEC 63 or 71 B5 C Faced Motors Only
30	205561-LLLLL	Square Key for 56 C Faced Motors Only
31	350115	Adapter Ring for 56 C Faced Motors Only
32	801-162	Flanged Bearing for 56 C Faced Motors Only
	801-163	Flanged Bearing for IEC 63 or 71 B5 C Faced Motors Only
33	915-076	Retaining Ring
WWW = Conveyor width reference: 160, 240, 320, 400, 480		
LLLLL = Part length in inches with two decimal places.		
Length Example: Length = 95.25" LLLLL = 09525		

Service Parts

Support Stand

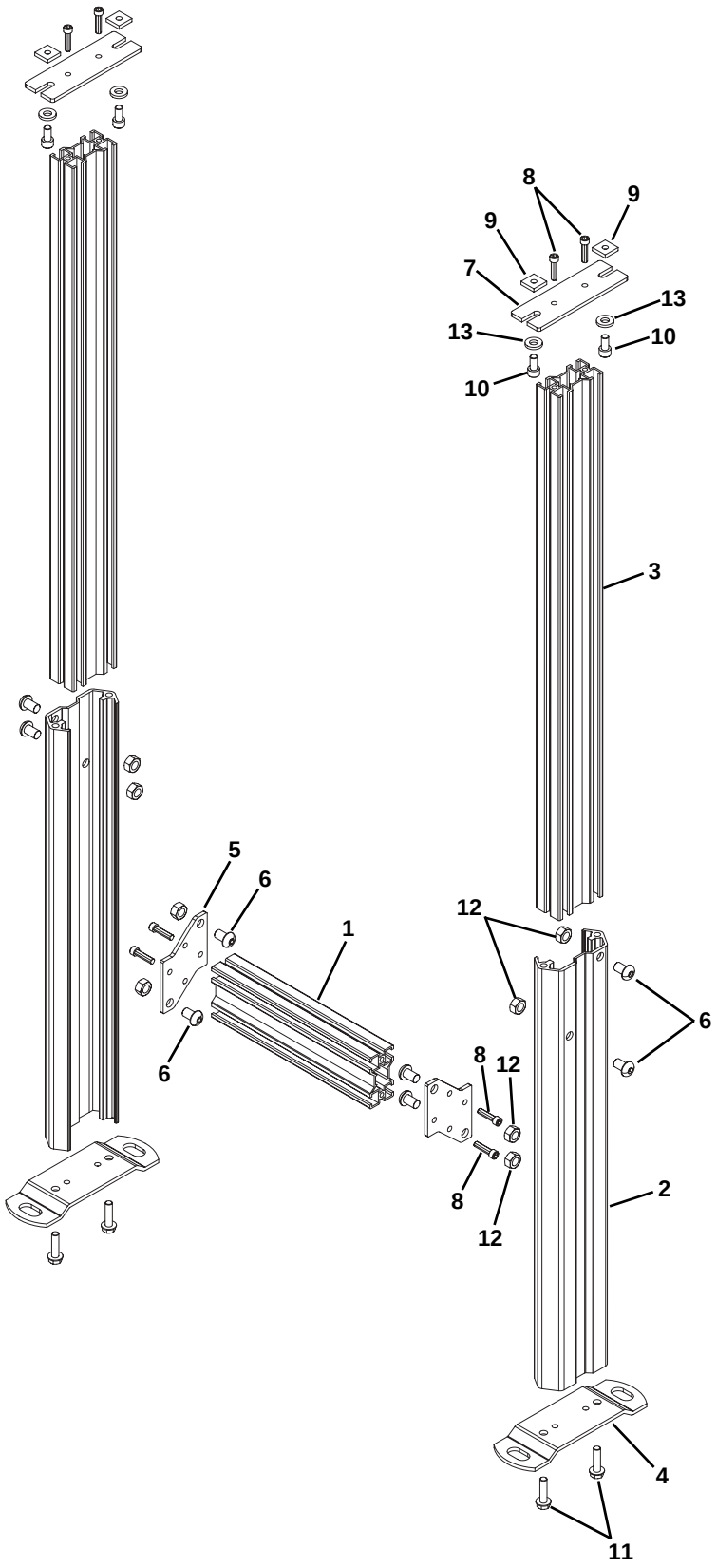

Item	Part Number	Description
1	710210-LLLLL	Crossmember
2	710021-LLLLL	Boot
3	710211-LLLLL	Leg
4	710004	Foot
5	710006	End Plate
6	911016M	Button Head Screw, M10-1.50 x 16 mm
7	205188	Top Plate
8	708180P	Trilobe Screw, M6-1.00 x 25 mm
9	834-014	Slide-In Nut, M8
10	920816M	Socket Head Screw, M8-1.25 x 16 mm
11	960897M	hex flange Cap Screw, M8-1.25 x 30 mm
12	991011M	Hex Nut, M10
13	605280P	Washer
LLLLL = Part length in inches with two decimal places.		
Length Example: Length = 95.25" LLLLL = 09525		

Service Parts

Corner Support Stand

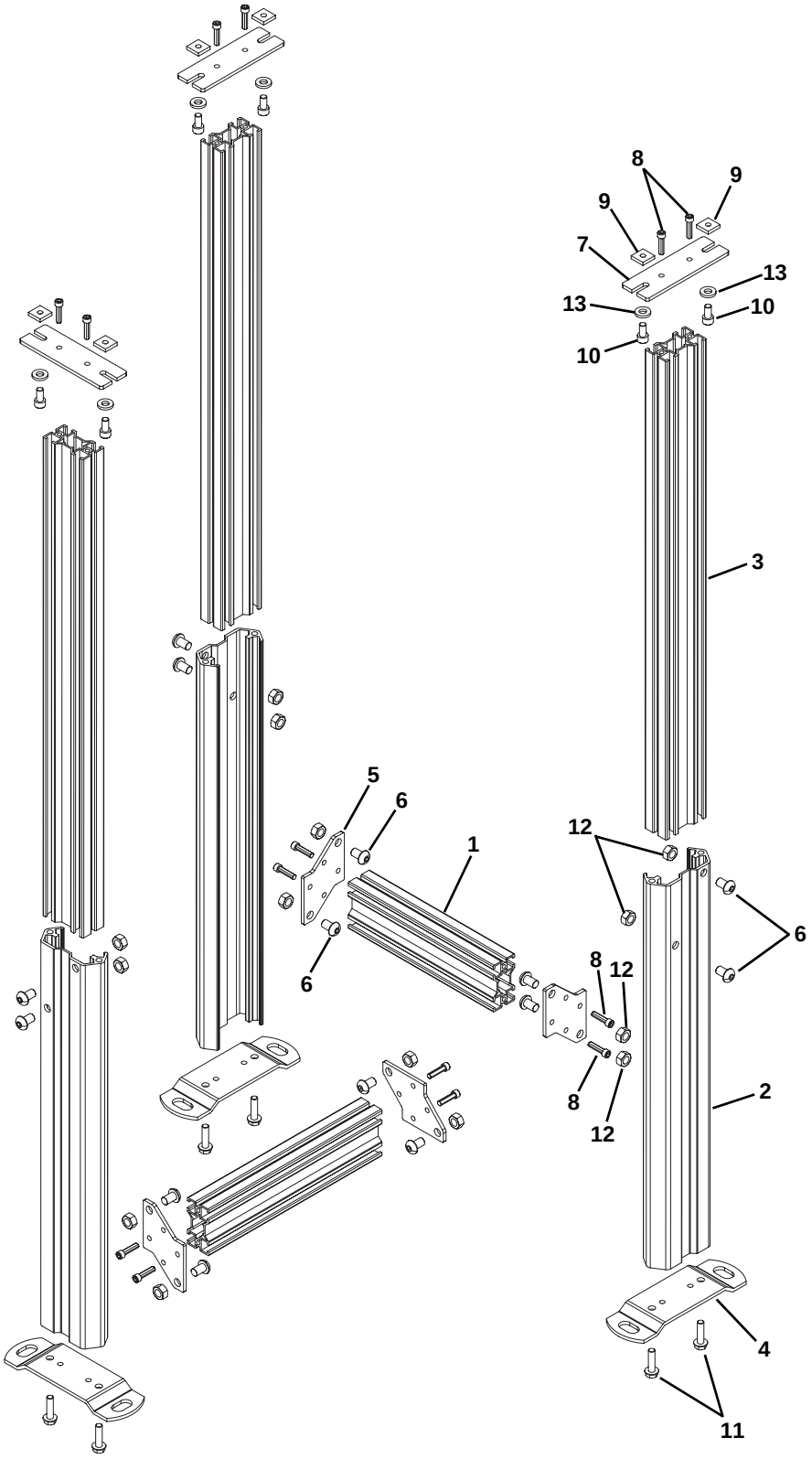

Item	Part Number	Description
1	710210-LLLLL	Crossmember
2	710021-LLLLL	Boot
3	710211-LLLLL	Leg
4	710004	Foot
5	710006	End Plate
6	911016M	Button Head Screw, M10-1.50 x 16 mm
7	205188	Top Plate
8	708180P	Trilobe Screw, M6-1.00 x 25 mm
9	834-014	Slide-In Nut, M8
10	920816M	Socket Head Screw, M8-1.25 x 16 mm
11	960897M	hex flange Cap Screw, M8-1.25 x 30 mm
12	991011M	Hex Nut, M10
13	605280P	Washer
LLLLL = Part length in inches with two decimal places.		
Length Example: Length = 95.25" LLLLL = 09525		

Service Parts

Connector Kit

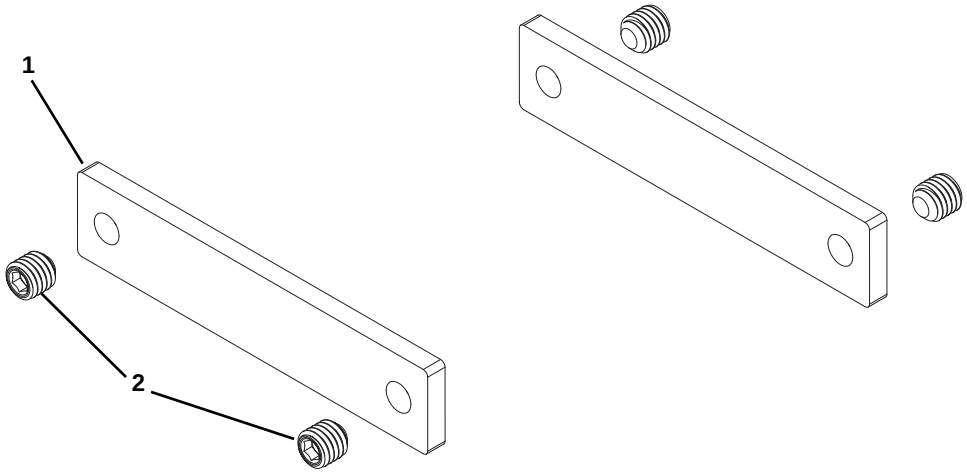

Item	Part Number	Description
1	834-017	Connector
2	970808M	Set Screw, M8-1.25 x 8 mm

Conveyor Tie Bracket

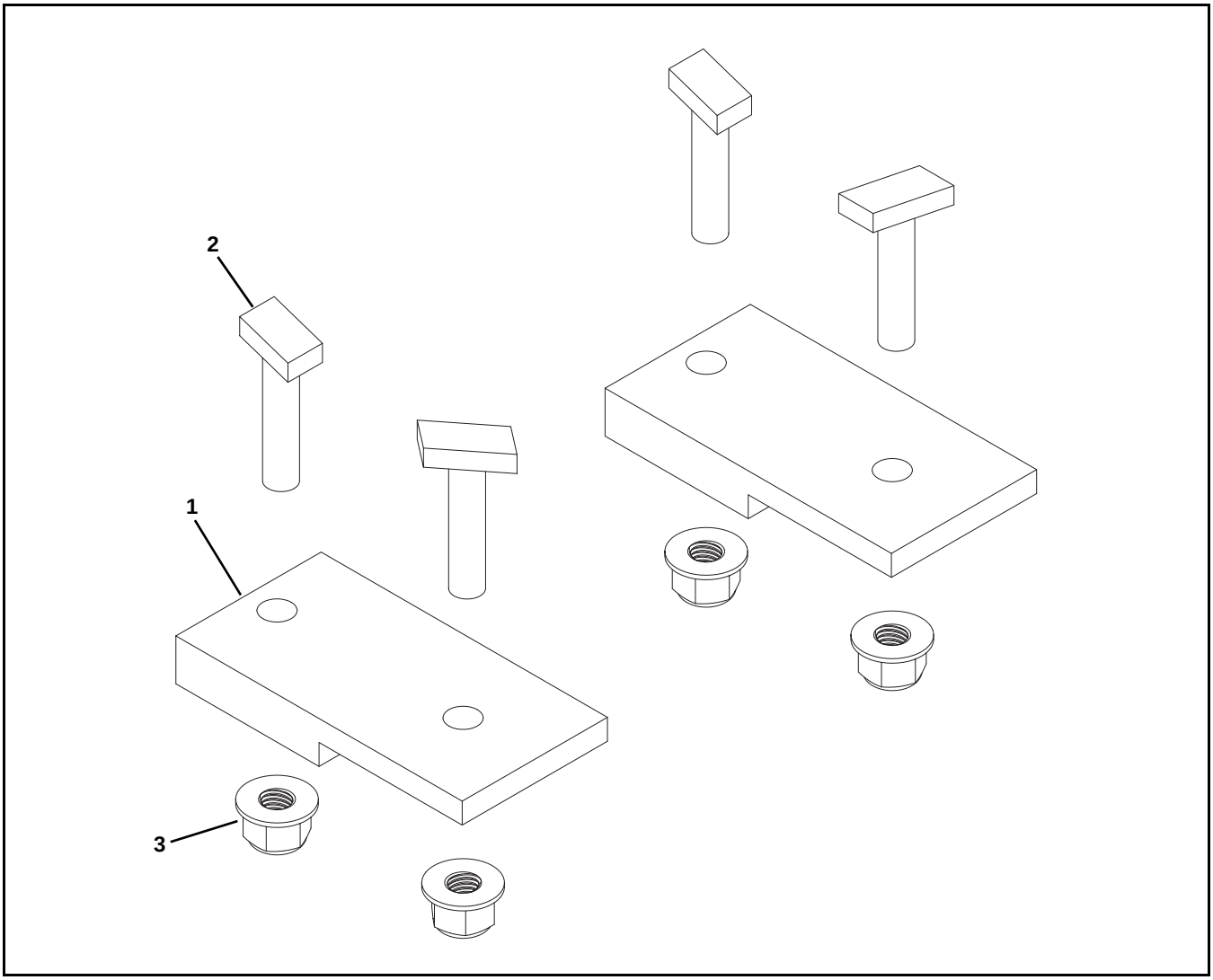

Item	Part Number	Description
1	205580	Plate
2	834-018	Twist-In Stud, M8 x 35 mm
3	990812M	Lock Nut

Service Parts

90° Industrial Gearmotors

U.S. Version Gearmotors

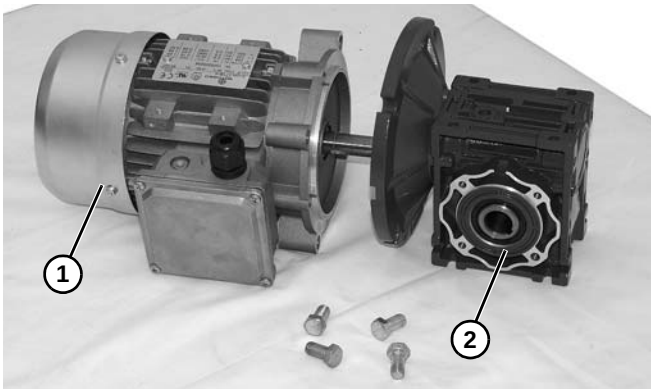

Item	Part No.	Part Description
1	62MES411FN	Motor, 0.25 Hp (0.19 Kw) 115/230 Volts, 60 Hz, 1-Phase
	62MES423FN	Motor, 0.25 Hp (0.19 Kw) 208-230/460 Volts, 60 Hz, 3-Phase
	32MS423EI	Motor, 0.25 Hp (0.19 Kw) 230/460 Volts DC, 60 Hz, 3-Phase Variable Frequency
	62MEH411FN	Motor, 0.5 hp (0.37 Kw) 115/230 Volts, 60 Hz, 1-Phase, non–reversing
	32MES423EN	Motor, 0.5 hp (0.37 Kw) 230V, 10–60Hz, 3 Phase
	32MEH423FN	Motor, 0.5 hp (0.37 Kw) 208–230/460 Volts, 60 Hz, 3-Phase
2	32M010EL	Gear Reducer, 10:1, 42CZ
	32M020EL	Gear Reducer, 20:1, 42CZ
	32M040EL	Gear Reducer, 40:1, 42CZ
	32M060EL	Gear Reducer, 60:1, 42CZ
	32M010ES	Gear Reducer, 10:1, 56C
	32M020ES	Gear Reducer, 20:1, 56C
	32M040ES	Gear Reducer, 40:1, 56C
	32M060ES	Gear Reducer, 60:1, 56C

CE Version Gearmotors

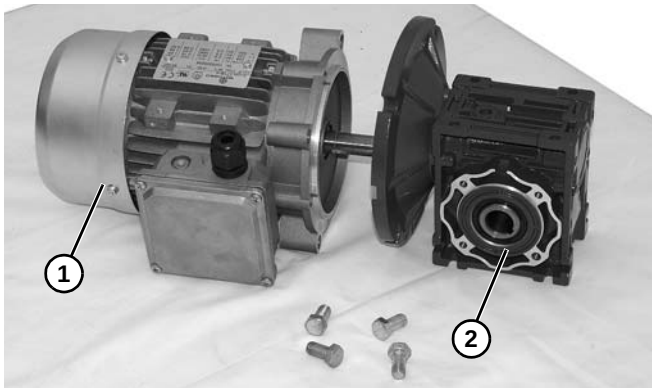

Item	Part Number	Description
1	826-281	Motor, 0.19 Kw 230 Volts, 1400 RPM 50 Hz, 1-Phase
	826-284	Motor, 0.19 Kw 230/400 Volts, 1400 RPM 50 Hz, 3-Phase
	826-342	Motor, 0.19 Kw 230/400 Volts, 50 Hz, 3-Phase
2	62Z010ES	Gear Reducer, 10:1, 63 B5
	62Z020ES	Gear Reducer, 20:1, 63 B5
	62Z040ES	Gear Reducer, 40:1, 63 B5
	62Z060ES	Gear Reducer, 60:1, 63 B5

Conveyor Belt Part Number Configuration

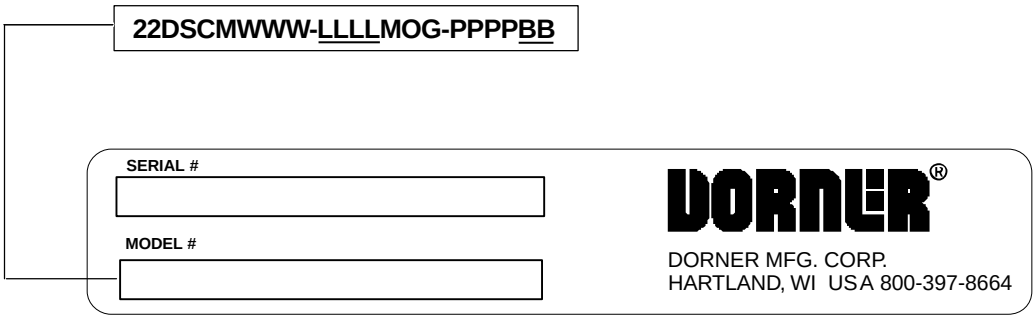

Figure 42

Refer to Dorner serial number plate **(Figure 42)**. From the model number, determine conveyor length ("LLLL") and belt type ("BB"). Use data to configure belt part number as indicated below.

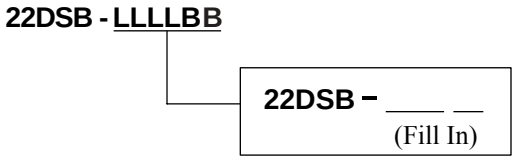

Return Policy

Returns must have prior written factory authorization or they will not be accepted. Items that are returned to Dorner without authorization will not be credited nor returned to the original sender. When calling for authorization, please have the following information ready for the Dorner factory representative or your local distributor:

1. Name and address of customer.
2. Dorner part number(s) of item(s) being returned.
3. Reason for return.
4. Customer's original order number used when ordering the item(s).
5. Dorner or distributor invoice number (if available, part serial number).

A representative will discuss action to be taken on the returned items and provide a Returned Goods Authorization (RMA) number for reference. RMA will automatically close 30 days after being issued. To get credit, items must be new and undamaged. There will be a return charge on all items returned for credit, where Dorner was not at fault. It is the customer's responsibility to prevent damage during return shipping. Damaged or modified items will not be accepted. The customer is responsible for return freight.

<table>
<tr><th></th><th colspan="9">Product Type</th></tr>
<tr><th></th><th colspan="8">Standard Products</th><th>Engineered to order parts</th></tr>
<tr><th>Product Line</th><th>Conveyors</th><th>Gearmotors & Mounting Packages</th><th>Support Stands</th><th>Accessories</th><th>Spare Parts (non-belt)</th><th>Spare Belts - Standard Flat Fabric</th><th>Spare Belts - Cleated & Specialty Fabric</th><th>Spare Belts - Plastic Chain</th><th>All equipment and parts</th></tr>
<tr><td>1100</td><td colspan="6" rowspan="13">30% return fee for all products except:
50% return fee for conveyors with modular belt, cleated belt or specialty belts</td><td colspan="2" rowspan="13">non-returnable</td><td rowspan="13">case-by-case</td></tr>
<tr><td>2200</td></tr>
<tr><td>2200 Modular Belt</td></tr>
<tr><td>2200 Precision Move</td></tr>
<tr><td>2300</td></tr>
<tr><td>2300 Modular Belt</td></tr>
<tr><td>3200</td></tr>
<tr><td>3200 LPZ</td></tr>
<tr><td>3200 Precision Move</td></tr>
<tr><td>4100</td></tr>
<tr><td>5200</td></tr>
<tr><td>5300</td></tr>
<tr><td>6200</td></tr>
<tr><td>Controls</td></tr>
<tr><td>7200 / 7300</td><td colspan="6">50% return fee for all products</td></tr>
<tr><td>7350</td><td colspan="9" rowspan="4">non-returnable</td></tr>
<tr><td>7360</td></tr>
<tr><td>7400</td></tr>
<tr><td>7600</td></tr>
</table>

Returns will not be accepted after 60 days from original invoice date. The return charge covers inspection, cleaning, disassembly, disposal and reissuing of components to inventory. If a replacement is needed prior to evaluation of returned item, a purchase order must be issued. Credit (if any) is issued only after return and evaluation is complete.

Dorner has representatives throughout the world. Contact Dorner for the name of your local representative. Our Customer Service Team will gladly help with your questions on Dorner products.

For a copy of Dorner's Warranty, contact factory, distributor, service center or visit our website at www.dorner.com.

For replacement parts, contact an authorized Dorner Service Center or the factory.

Dorner Mfg. Corp. reserves the right to change or discontinue products without notice. All products and services are covered in accordance with our standard warranty. All rights reserved. © Dorner Mfg. Corp. 2015

DORNER MFG. CORP.
975 Cottonwood Ave., PO Box 20
Hartland, WI 53029-0020 USA
TEL 1-800-397-8664 (USA)
FAX 1-800-369-2440 (USA)
Internet: www.dorner.com

Outside the USA:
TEL 1-262-367-7600
FAX 1-262-367-5827