2200 Series
SmartFlex Conveyors

Installation, Maintenance & Parts Manual

DORNER MFG. CORP.
P.O. Box 20 • 975 Cottonwood Ave.
Hartland, WI 53029-0020 USA

INSIDE THE USA
TEL: 1-800-397-8664
FAX: 1-800-369-2440

OUTSIDE THE USA
TEL: 262-367-7600
FAX: 262-367-5827

For other service manuals visit our website at:
www.dorner.com/service_manuals.asp

851-757 Rev. B

Table of Contents

Introduction 4
Warnings – General Safety 5
Product Description 6
Specifications 7
Modules: 7
Infeed Module 7
Curve Module 7
Intermediate Module 7
Incline/Decline Module 7
Drive Module 7
Top Running Drive Module 7
Conveyor Supports: 8
Maximum Distances: 8
Specifications: 8
Table 1: Gearmotor Specifications 8
U.S. Version 8
CE Version 8
SEW Gearmotor Specifications 9
Table 2: Belt Speed for Standard Load Fixed Speed 90° Gearmotors 9
U.S. Version (60 Hz Gearmotors) 9
CE Version (50 Hz Gearmotors) 9
Table 3: Belt Speeds for Standard Load Variable Speed 90° DC Gearmotors 9
U.S. Version (60 Hz Gearmotors) 9
Table 4: Belt Speeds for Standard Load Variable Speed 90° VFD Gearmotors 10
U.S. Version (60 Hz Gearmotors) 10
CE Version (50 Hz Gearmotors) 10
Table 5: Belt Speeds for Standard Load SEW Fixed Speed Gearmotors 10
Table 6: Belt Speeds for Standard Load SEW Variable Speed Gearmotors 10
Table 7: Belt Speed for Heavy Load Fixed Speed 90° Gearmotors 10
U.S. Version (60 Hz Gearmotors) 10
Table 8: Belt Speed for Heavy Load Variable Speed 90° VFD Gearmotors 11
U.S. Version (60 Hz Gearmotors) 11
Table 9: Belt Speeds for Heavy Load SEW Fixed Speed Gearmotors 11
Table 10: Belt Speeds for Heavy Load SEW Variable Speed Gearmotor 11
Installation 12
Required Tools 12
Recommended Installation Sequence 12
Module Lengths Longer Than 10 ft (3048 mm) 12
Knuckles 13
Curves 13
Tails 14
Unroll Wear Strips 14
Mounting Brackets 15
Install Support Stands 15
Belt Installation 15
Weighted Take-Up 17
Top Running Drive 18
Install Guiding 19
Standard 1.5” Guiding 19
Fully Adjustable Guiding 20
Install Drive Package 22
Preventive Maintenance and Adjustment 23
Required Tools 23
Checklist 23
Lubrication 23
Maintaining the Conveyor Belt 23
Troubleshooting 23
Conveyor Belt Replacement 23
Replacing a Section of Belt 23
Replacing the Entire Belt 24
Conveyor Belt Tensioning 24
Wear Strip Removal 25
Wear Strip Installation 25
Attaching Wear Strip on Straight Frame 25
Attaching Wear Strip on Conveyor Frame 26
Attaching Wear Strip at Wheel Bend 27
Attaching Wear Strip 27
Idler Pulley Assembly 28
Drive Spindle Shaft Assembly 29
Retaining Guide Replacement 30
Drive End 30
Idler End 31
Top Running Drive 32
Curve Assembly 33
Weighted Take-Up 34
Power Transfer 36
Removal 36
Installation 39
Roller Transfer 42
Notes 43
Service Parts 44
Drive Tail 44
Weighted Take-Up 46
Weighted Take-Up Drive Tail 48
Idler Tail 49
Top Running Drive 50
Frame Assembly 52
Wear Strip Replacement Tool 53
65 Width Curve Frame Assembly 54
105 Width Curve Frame Assembly 55
150 Width Curve Frame Assembly 56
65 Width Knuckle Frame Assembly 57
105 Width Knuckle Frame Assembly 58
150 Width Knuckle Frame Assembly 59
04 3" High Sides for Straight Modules 60
04 3" High Sides for Curve Modules 61
04 3" High Sides for Incline/Decline Modules 62
05 1.50" High Sides for Straight Modules 63
05 1.50" High Sides for Curve Modules 64
05 1.50" High Sides for Incline/Decline Modules 65
13 Fully Adjustable Guiding for Straight Modules 66

13 Fully Adjustable Guiding for Curve Modules..... 67
14 Tool-Less Fully Adjustable Guiding for Straight Modules..... 68
14 Tool-Less Fully Adjustable Guiding for Curve Modules..... 69
16 Gull Wing Guiding for Straight Modules..... 70
16 Gull Wing Guiding for Curve Modules..... 71
#13 & #14 - Adjustable Guiding and #16 - Gull Wing Guiding for Incline/Decline Modules..... 72
Power Transfer 73
Transfer Roller..... 74
Transfer Roller to 2200 Series Conveyor..... 75
Mounting Brackets 76
Motor Mounting Assembly 77
Connecting Assembly..... 78
Gearmotor Mounting Package..... 79
SEW Gearmotor Mounting Package 80
90° SEW Gearmotors 81
90° Industrial Gearmotors 81
U.S. Version..... 81
CE Version..... 82
Ordering a Replacement Chain 82
Belt Removal Tool 82
Notes 83
Return Policy..... 84

Introduction

IMPORTANT

Some illustrations may show guards removed. DO NOT operate equipment without guards.

Upon receipt of shipment:

- Compare shipment with packing slip. Contact factory regarding discrepancies.
- Inspect packages for shipping damage. Contact carrier regarding damage.
- Accessories may be shipped loose. See accessory instructions for installation.

Dorner's Limited Warranty applies.

Dorner has convenient, pre–configured kits of Key Service Parts for all conveyor products. These time saving kits are easy to order, designed for fast installation, and guarantee you will have what you need when you need it. Key Parts and Kits are marked in the Service Parts section of this manual with the Performance Parts Kits logo .

Dorner reserves the right to make changes at any time without notice or obligation.

⚠ WARNING

The safety alert symbol, black triangle with white exclamation, is used to alert you to potential personal injury hazards.

⚠ DANGER

Climbing, sitting, walking or riding on conveyor will cause severe injury. KEEP OFF CONVEYORS.

⚠ DANGER

DO NOT OPERATE CONVEYORS IN AN EXPLOSIVE ENVIRONMENT.

⚠ WARNING

Exposed moving parts can cause severe injury. LOCK OUT POWER before removing guards or performing maintenance.

⚠ WARNING

Gearmotors may be HOT.

DO NOT TOUCH Gearmotors.

⚠ WARNING

Dorner cannot control the physical installation and application of conveyors. Taking protective measures is the responsibility of the user.

When conveyors are used in conjunction with other equipment or as part of a multiple conveyor system, CHECK FOR POTENTIAL PINCH POINTS and other mechanical hazards before system start-up.

⚠ WARNING

Loosening stand height or angle adjustment screws may cause conveyor sections to drop down, causing severe injury.

SUPPORT CONVEYOR SECTIONS PRIOR TO LOOSENING STAND HEIGHT OR ANGLE ADJUSTMENT SCREWS.

Product Description

Refer to **Figure 1** for typical components.

1	Infeed Module
2	Curve Module
3	Incline Module
4	Decline Module
5	Intermediate Module
6	Drive Module
7	Gearmotor
8	Stands

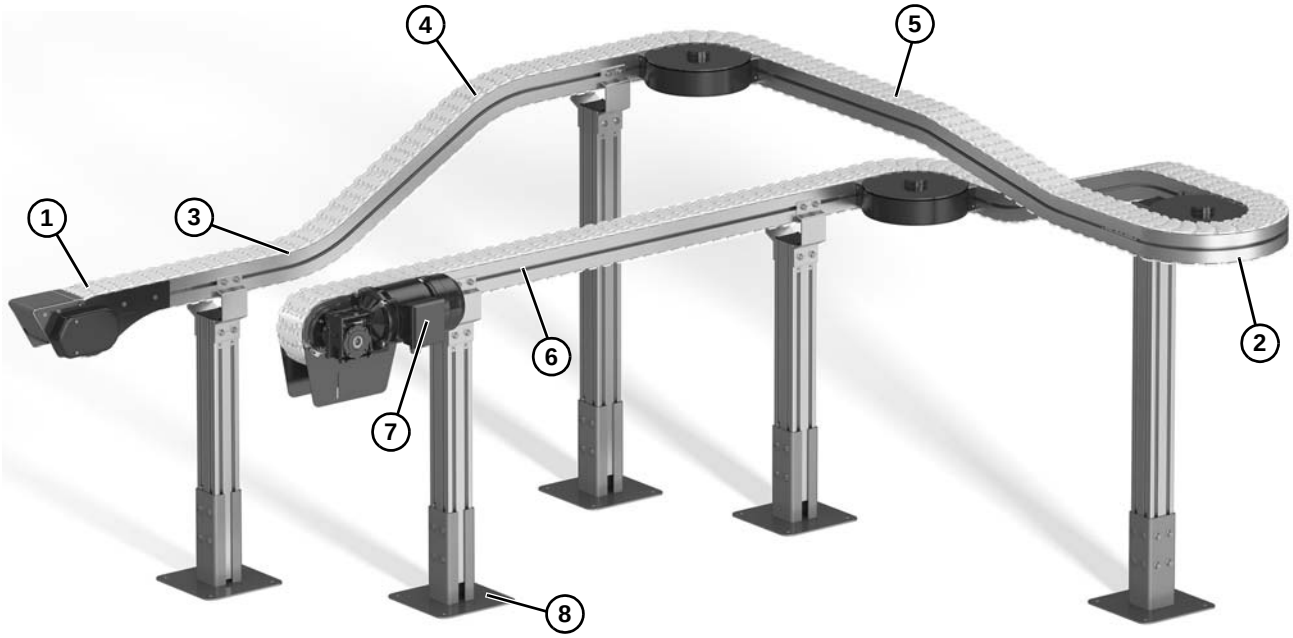

Figure 1

Modules:

Infeed Module

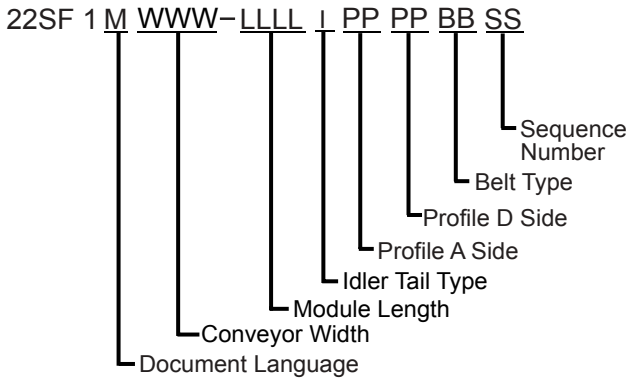

Curve Module

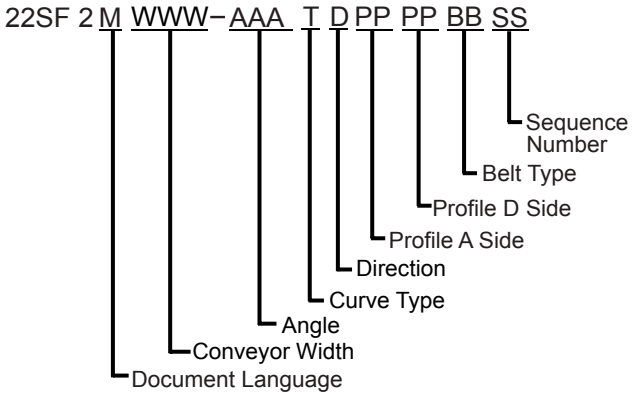

Intermediate Module

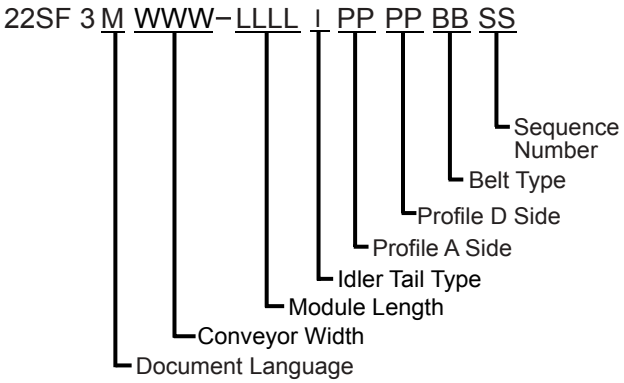

Incline/Decline Module

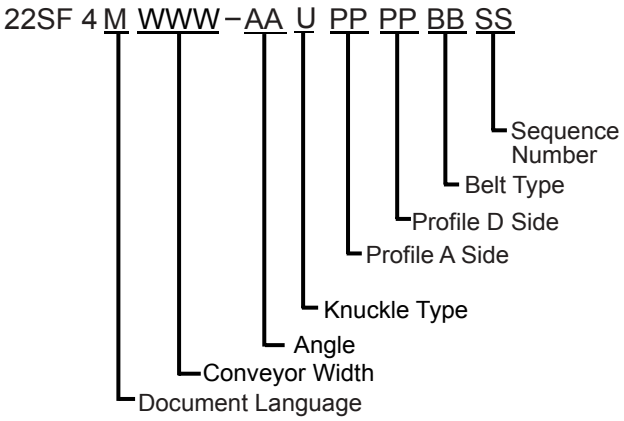

Drive Module

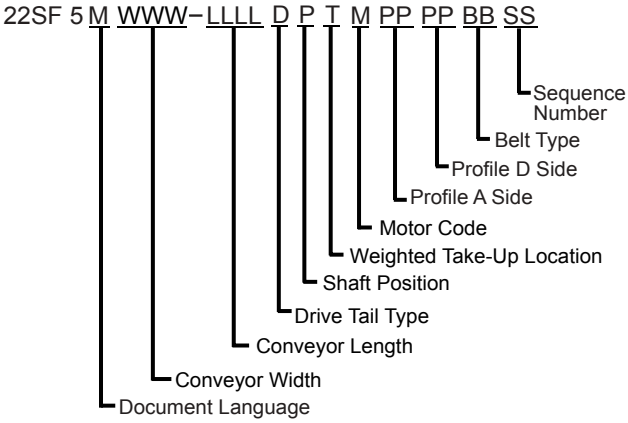

Top Running Drive Module

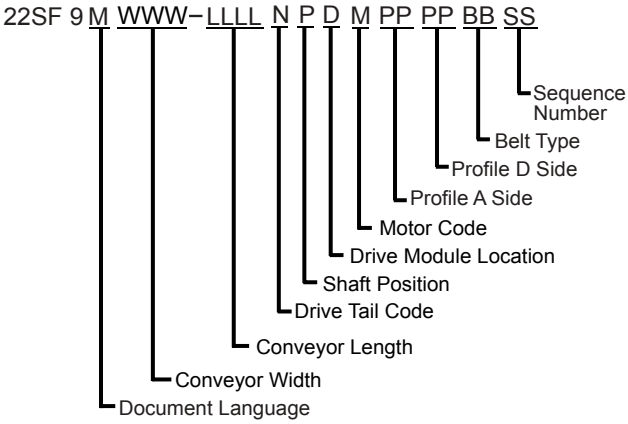

Specifications

Conveyor Supports:

Maximum Distances:

1 = 36" (914 mm)

2 = 10 ft (3048 mm)*

3 = 36" (914 mm)

* For conveyors longer than 10 ft (3048 mm), install support at joint.

Note: Additional support required on 180° curve modules.

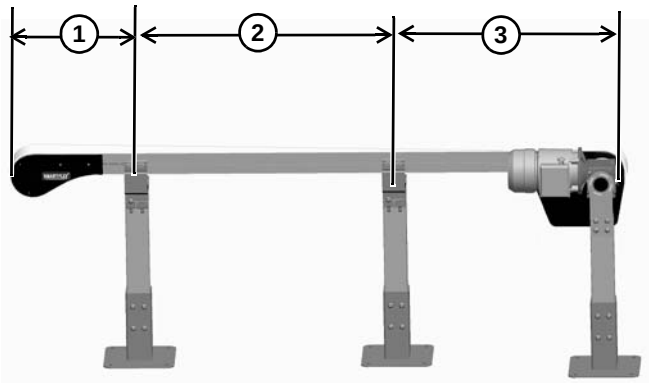

Figure 2

Specifications:

Conveyor Widths Reference (WW)	065	105	150
Conveyor Belt Width	2.47" (63 mm)	4.05" (103 mm)	5.91" (150 mm)
Maximum Load	330 lb (149 kg)	660 lb (299 kg)	660 lb (299 kg)
Maximum Belt Speed	250 RPM		
Belt Takeup (Standard Weighted Take-up)	6" / 8" (152 mm / 203 mm)	6" / 8" (152 mm / 203 mm)	6" / 8" (152 mm / 203 mm)
Module Length Reference	0167-5000		
Module Length	1.67' (509 mm)- 50.00' (15,240 mm)		
Total Conveyor Length	99 ft (30,175 mm) maximum		

Table 1: Gearmotor Specifications

U.S. Version

Item	Standard Load Gearmotor			
	Single-Phase	**Three Phase**	**VFD Variable Speed**	**DC Variable Speed**
Output Power	0.5 hp (0.37 kw)			
Input Voltage	115 VAC	208 – 230/460 VAC	230 VAC	90VDC
Input Frequency	60Hz		10 – 60Hz	N/A
Input Current (Amperes)	7.4	2.1 – 2/1	1.6	5.0
Gearmotor Ratios	5:1, 10:1, 20:1			
Frame Size	NEMA 56C			
Motor Type	Totally enclosed, Fan cooled			

CE Version

Item	Standard Load Gearmotor		
	Single Phase	**Three Phase**	**VFD Variable Speed**
Output Power	0.37 kW		
Input Voltage	230 VAC	230/400 VAC	230 VAC
Input Frequency	50 Hz		25 to 63 Hz
Input Current	2.6 Amperes	2.1/1.2 Amperes	2.1Amperes
Gearmotor Ratios	5:1, 10:1, 20:1		
Protection Rating	IP55		
Frame Size	IEC 71 B5		

SEW Gearmotor Specifications

	Three Phase			VFD Vari Speed		
Output Power	0.5 Hp (0.37 kW)	0.75 Hp (0.56 kW)	1 Hp (0.75 kW)	0.5 Hp (0.37 kW)	0.75 Hp (0.56 kW)	1 Hp (0.75 kW)
Input Voltage	230/460			230/460		
Input Frequency	60 Hz			10 to 60 Hz		
Input Current	1.84/0.92	2.50/1.25	2.90/1.44	1.84/0.92	2.50/1.25	2.90/1.44
RPM	47	134	264	8 to 47	22 to 134	44 to 264
Ratio	37.7:1	13.4:1	6.8:1	37.7:1	13.4:1	6.8:1
Motor Frame	IEC71	IEC71	IEC80	IEC71	IEC71	IEC80
Motor Type	IP54 Totally Enclosed Fan Cooled			IP54 Totally Enclosed Fan Cooled		

Table 2: Belt Speed for Standard Load Fixed Speed 90° Gearmotors

U.S. Version (60 Hz Gearmotors)

Part Number	RPM	In-lb	N-m	Belt Speed			
				65 mm		105 mm & 150mm	
				Ft/min	M/min	Ft/min	M/min
32M060ES4(vp)FN	29	226	25.5	38	11.6	40	12.2
32M040ES4(vp)FN	43	247	27.9	58	17.7	60	18.3
32M020ES4(vp)FN	86	248	27.9	115	35.1	121	36.9
32M010ES4(vp)FN	173	156	17.6	230	70.1	241	73.5

(vp) = voltage and phase

11 = 115 V, 1-phase

23 = 208 – 230/460 V, 3-phase

CE Version (50 Hz Gearmotors)

Part Number	RPM	N-m	Belt Speed			
			65 mm		105 mm & 150 mm	
			Ft/min	M/min	Ft/min	M/min
62Z060ES4(vp)FN	23	26.8	31	9.4	33	10.1
62Z040ES4(vp)FN	35	29.4	47	14.3	49	14.9
32Z020ES4(vp)FN	70	29.9	93	28.3	98	29.9
32Z010ES4(vp)FN	140	21.5	187	57.0	196	59.7

(vp) = voltage and phase

21 = 230 V, 1-phase

23 = 230 V, 3-phase

43 = 400 V, 3-phase

Table 3: Belt Speeds for Standard Load Variable Speed 90° DC Gearmotors

U.S. Version (60 Hz Gearmotors)

Part Number	RPM	In-lb	N-m	Belt Speed			
				65 mm		105 mm & 150 mm	
				Ft/min	M/min	Ft/min	M/min
32M060ESD9DEN	42	198	22.4	6.8 - 56	2.1 - 17.1	7.0 - 58	2.1 - 17.7
32M040ESD9DEN	63	215	24.3	10 - 83	3.0 - 25.3	11 - 87	3.3 - 26.5
62M020ESD9DEN	125	196	22.1	20 - 167	6.1 - 50.9	21 - 175	6.4 - 53.3
62M010ESD9DEN	250	108	12.2	40 - 333	12.2 - 76.2	42 - 349	12.8 - 76.2

Table 4: Belt Speeds for Standard Load Variable Speed 90° VFD Gearmotors

U.S. Version (60 Hz Gearmotors)

Part Number	RPM	In-lb	N-m	Belt Speed			
				65 mm		105 mm & 150mm	
				Ft/min	M/min	Ft/min	M/min
32M060ES423EN	29	226	25.5	3.8 - 38	1.2 - 11.6	4.0 - 40	1.2 - 12.2
32M040ES423EN	43	247	27.9	5.8 - 58	1.8 - 17.7	6.0 - 60	1.8 - 18.3
32M020ES423EN	86	248	27.9	12 -115	3.7 - 35.1	12 - 121	3.7 - 36.9
32M010ES423EN	173	156	17.6	23 - 230	7.0 - 70.1	24 - 241	7.3 - 73.5

CE Version (50 Hz Gearmotors)

Part Number	RPM	N-m	Belt Speed			
			65 mm		105 mm & 150mm	
			Ft/min	M/min	Ft/min	M/min
62Z060ES423EN	23	26.8	16 - 39	4.9 - 11.9	17 - 42	5.2 - 12.8
62Z040ES423EN	35	29.4	24 - 59	7.3 - 18.0	25 - 62	7.6 - 18.9
32Z020ES423EN	70	29.9	47 -117	14.3 - 35.7	49 - 123	14.9 - 37.5
32Z010ES423EN	140	21.5	94 - 236	28.7 - 71.9	98 - 247	29.9 - 75.3

Table 5: Belt Speeds for Standard Load SEW Fixed Speed Gearmotors

Part Number	RPM	In-lb	N-m	Belt Speed			
				65 mm		105 mm & 150 mm	
				Ft/min	M/min	Ft/min	M/min
32M038WS423EN	47	548	61.9	63	19.2	66	20.1
32M013WS423EN	134	327	37.0	179	54.6	187	57.0

Table 6: Belt Speeds for Standard Load SEW Variable Speed Gearmotors

Part Number	RPM	In-lb	N-m	Belt Speed			
				65 mm		105 mm & 150 mm	
				Ft/min	M/min	Ft/min	M/min
32M038WS423EN	47	548	61.9	6.3 - 63	1.9 - 19.2	6.6 - 66	2.0 - 20.1
32M013WS423EN	134	327	37.0	18 - 179	5.5 - 54.6	19 - 187	5.8 - 57.0
32M007WS423EN	264	221	25.0	35 - 352	10.7 - 76.2	37- 369	11.3 - 76.2

Table 7: Belt Speed for Heavy Load Fixed Speed 90° Gearmotors

U.S. Version (60 Hz Gearmotors)

Part Number	RPM	In-lb	N-m	Belt Speed			
				65 mm		105 mm & 150 mm	
				Ft/min	M/min	Ft/min	M/min
32M100EH4(vp)FN	17	913	103	23	7.0	24	7.3
32M080EH4(vp)FN	22	833	94	29	8.8	31	9.4
32M060EH4(vp)FN	29	680	76	39	11.9	41	12.5
32M050EH423FN	35	1206	136	47	14.3	49	14.9
32M040EH423FN	43	1023	115	57	17.4	60	18.3
32M030EH423FN	58	1217	137	77	23.5	81	24.7
32M025EH423FN	69	1069	121	92	28.0	96	29.3
32M020EH423FN	86	1184	134	115	35.1	120	36.6
32M015EH423FN	115	910	103	153	46.6	161	49.1
32M010EH423FN	173	636	72	231	70.4	242	73.8

Table 8: Belt Speed for Heavy Load Variable Speed 90° VFD Gearmotors

U.S. Version (60 Hz Gearmotors)

Part Number	RPM	In-lb	N-m	Belt Speed			
				65 mm		105 mm & 150 mm	
				Ft/min	M/min	Ft/min	M/min
32M100HH423EN	17	913	103	2.3 - 23	0.7 - 7.0	2.4 - 24	0.7 - 7.3
32M080HH423EN	22	833	94	2.9 - 29	0.9 - 8.8	3.1 - 31	0.9 - 9.4
32M060HH423EN	29	680	76	3.9 - 39	1.2 - 11.9	4.1 - 41	1.2 - 12.5
32M050HH423EN	35	1206	136	4.7 - 47	1.4 - 14.3	4.9 - 49	1.5 - 14.9
32M040HH423EN	43	1023	115	5.7 - 57	1.7 - 17.4	6.0 - 60	1.8 - 18.3
32M030HH423EN	58	1217	137	7.7 - 77	2.3 - 23.5	8.1 - 81	2.5 - 24.7
32M025HH423EN	69	1069	121	9.2 - 92	2.8 - 28.0	9.6 - 96	2.9 - 29.3
32M020HH423EN	86	1184	134	12 - 115	3.7 - 35.1	12 - 120	3.7 - 36.6
32M015HH423EN	115	910	103	15 - 153	4.6 - 46.6	16 - 161	4.9 - 49.1
32M010HH423EN	173	636	72	23 - 231	7.0 - 70.4	24 - 242	7.3 - 73.8

Table 9: Belt Speeds for Heavy Load SEW Fixed Speed Gearmotors

Part Number	RPM	In-lb	N-m	Belt Speed			
				65 mm		105 mm & 150 mm	
				Ft/min	M/min	Ft/min	M/min
32M128WH423EN	13	991	112.0	17	5.2	18	5.5
32M044WH423EN	38	973	109.9	51	15.5	53	16.2
32M016WH423EN	106	787	88.9	141	43.0	148	45.1
32M008WH423EN	201	575	65.0	268	81.7	281	85.6

Table 10: Belt Speeds for Heavy Load SEW Variable Speed Gearmotor

Part Number	RPM	In-lb	N-m	Belt Speed			
				65 mm		105 mm & 150 mm	
				Ft/min	M/min	Ft/min	M/min
32M128WH423EN	13	991	112.0	1.7 - 17	0.5 - 5.2	1.8 - 18	0.5 - 5.5
32M044WH423EN	38	973	109.9	5.1 - 51	1.6 - 15.5	5.3 - 53	1.6 - 16.2
32M016WH423EN	106	787	88.9	14 - 141	4.3 - 43.0	15 - 148	4.6 - 45.1
32M008WH423EN	201	575	65.0	27 - 268	8.2 - 81.7	28 - 281	8.5 - 85.6

Installation

Required Tools

- 3/32” hex wrench
- 3 mm hex wrench
- 4 mm hex wrench
- 5 mm hex wrench
- 6 mm hex wrench
- 8 mm hex wrench
- 10 mm wrench
- 13 mm wrench
- 16 mm wrench
- Belt Removal Tool #203480

Recommended Installation Sequence

- Locate and arrange sections by section labels:
- Assemble conveyor (Module lengths longer than 10 ft. (3000 mm)
- Install knuckles
- Install curves
- Install tails
- Unroll wear strips
- Install mounting bracket
- Install support stands
- Install belt
- Install weighted take-up
- Install guiding
- Install drive package
  - Motor mounting package
  - Gearmotor

Typical Connecting Components **(Figure 3)**

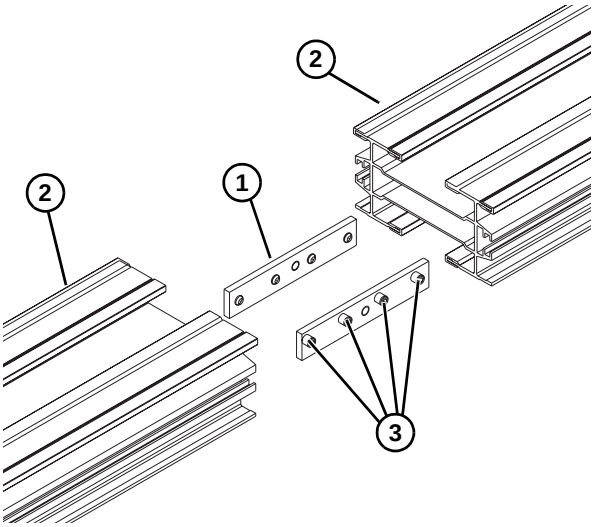

Figure 3

1	Clamp Plate
2	Conveyor frames
3	Set Screw, M8 - 1.25 x 10 mm

Module Lengths Longer Than 10 ft (3048 mm)

1. Locate and arrange conveyor sections by section labels **(Figure 4, item 1)**.

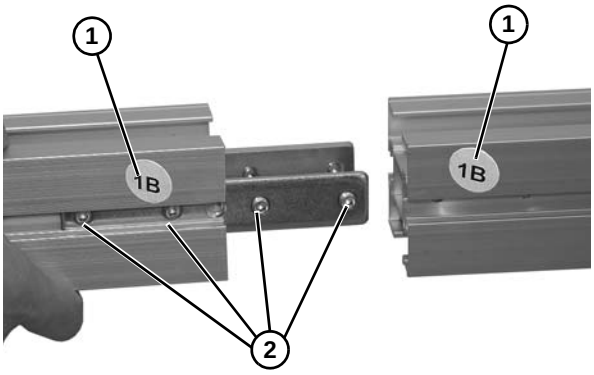

Figure 4

2. Join both conveyor sections, and tighten two set screws **(Figure 4, item 2)** on both sides. Tighten all set screws 1/4 turn past contact with frame.

Knuckles

NOTE
*Be sure all frame sections **(Figure 5, item 1)** are properly supported during knuckle assembly.*

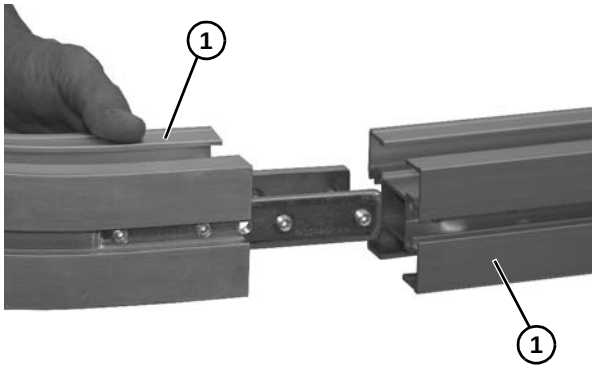

Figure 5

1. Join knuckle conveyor frame section **(Figure 6, item 1)**, and conveyor frame **(Figure 6, item 2)** and secure with two set screws **(Figure 6, item 3)** on both sides. Tighten all set screws 1/4 turn past contact with frame.

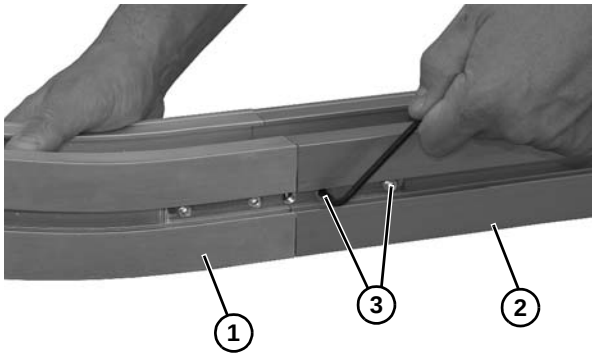

Figure 6

Curves

Typical Curve Connecting Components **(Figure 7)**

1	Clamp Plate
2	Conveyor Frames
3	Curve Assembly
4	Set Screw, M8 - 1.25 x 10 mm

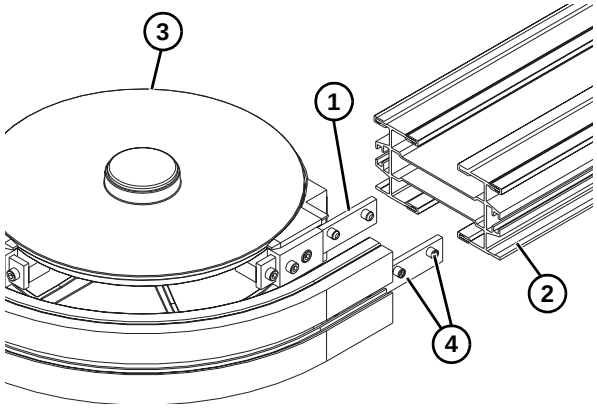

Figure 7

1. Remove two screws **(Figure 8, item 1)** and guard **(Figure 8, item 2)** from curve assembly.

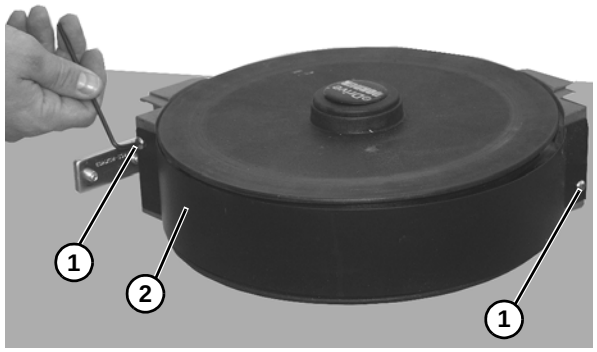

Figure 8

2. Install curve assembly **(Figure 9, item 1)** clamp plates **(Figure 9, item 2)** into one conveyor section **(Figure 9, item 3)** by lining up clamp plate with slot in conveyor frame.

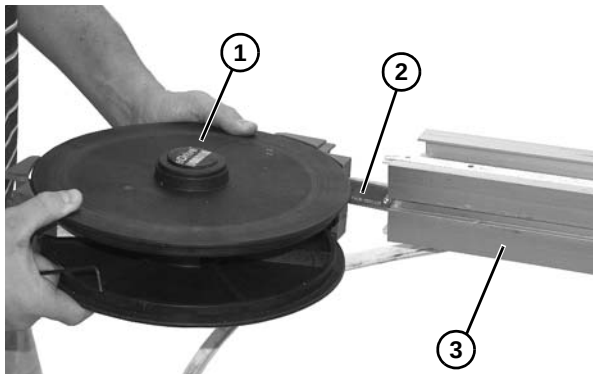

Figure 9

3. Secure with two set screws **(Figure 10, item 1)**. Tighten all set screws 1/4 turn past contact with frame.

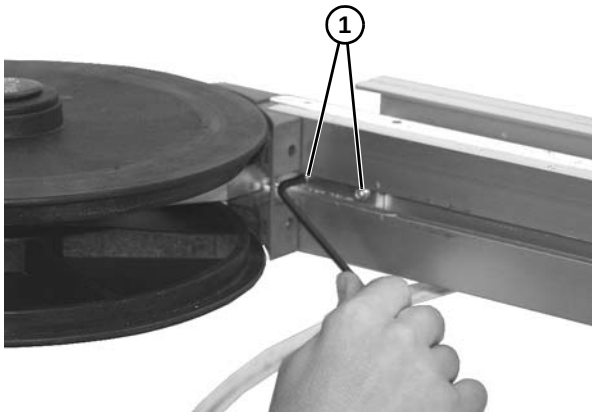

Figure 10

4. Install outer curve frame assembly **(Figure 11, item 1)** clamp plate **(Figure 11, item 2)** into conveyor frame section **(Figure 11, item 3)** by lining up clamp plate with slot in conveyor frame.

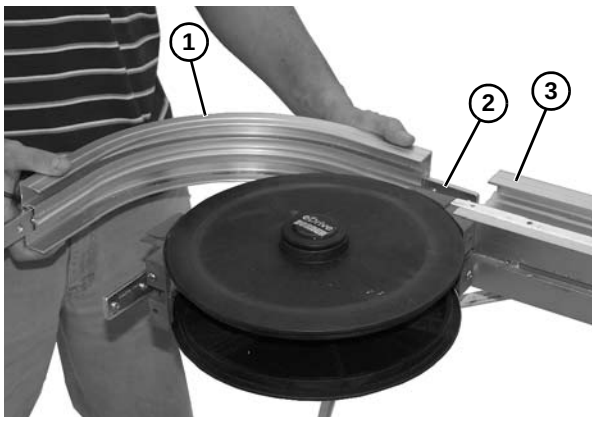

Figure 11

5. Install opposite end of conveyor onto curve assembly, repeating procedure. Tighten all set screws 1/4 turn past contact with frame.
6. Install guard with **(Figure 12, item 1)** two screws **(Figure 12, item 2)**.

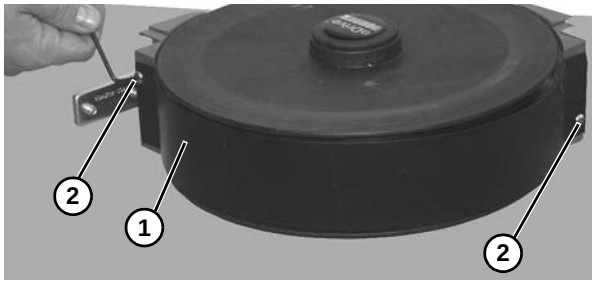

Figure 12

Tails

1. Install tail assembly **(Figure 13, item 1)** clamp plate into conveyor frame section **(Figure 9, item 2)** by lining up clamp plate with slot in conveyor frame.

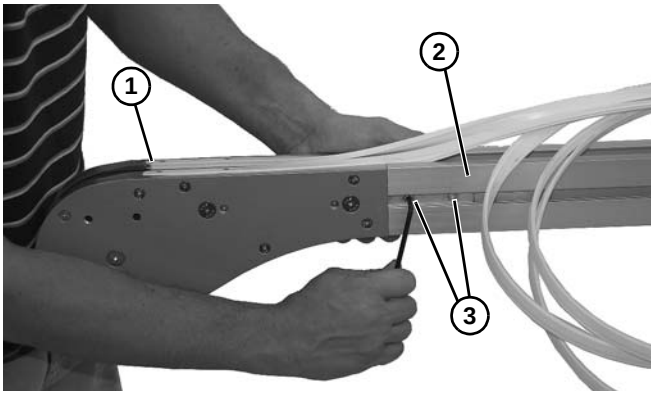

Figure 13

2. Secure with two set screws **(Figure 13, item 3)**. Tighten all set screws 1/4 turn past contact with frame.

Unroll Wear Strips

NOTE
Top and bottom wear strips are shipped pinned/attached at various places on conveyor.

1. **U**nroll wear strip **(Figure 14, item 1)**.

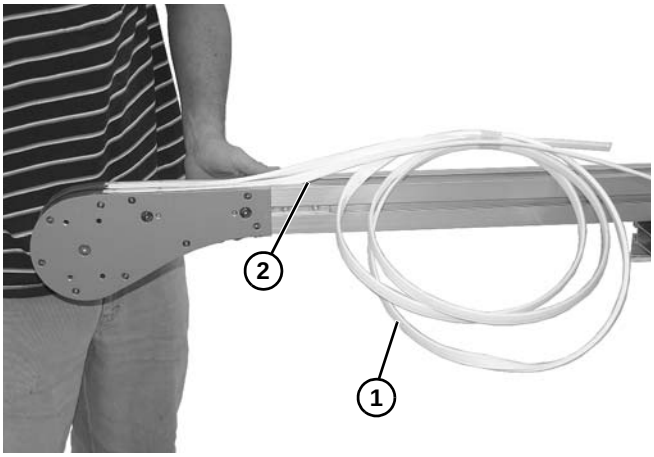

Figure 14

2. Guide wear strip into channel **(Figure 14, item 2)** on conveyor frame.

Mounting Brackets

1. Locate brackets. Exploded views shown in **Figure 15**.

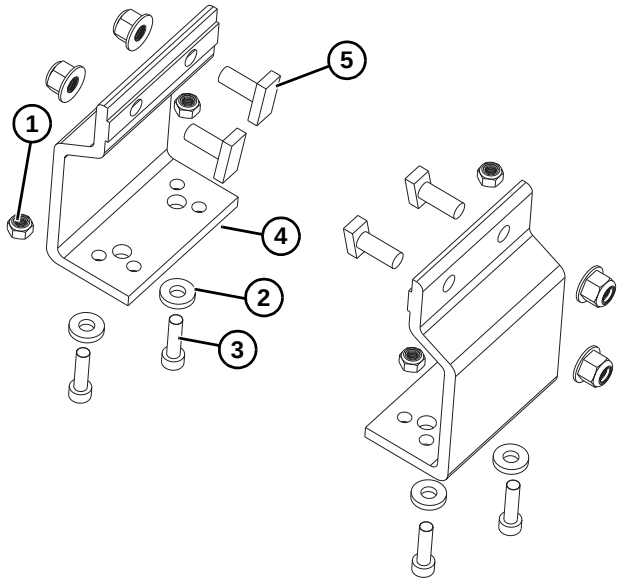

Figure 15

2. Remove nuts **(Figure 15, item 1)**, washers **(Figure 15, item 2)**, and screws **(Figure 15, item 3)** from brackets **(Figure 15, item 4)**.
3. Insert bracket with studs **(Figure 15, item 5)** with head parallel to slot into conveyor side slots.
4. Fasten brackets **(Figure 16, item 1)** to conveyor with nuts **(Figure 16, item 2)** on studs. Turn nuts clockwise to rotate studs in side slots.

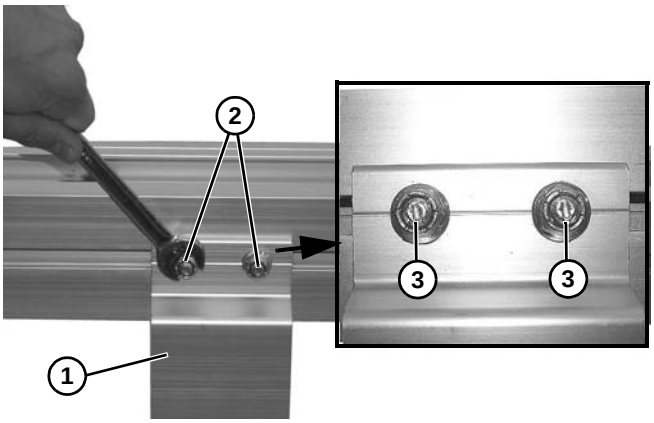

Figure 16

NOTE
*Be certain that stud slot **(Figure 16, item 3)** is close to vertical when finished tightening nut.*

5. Tighten nuts **(Figure 16, item 2)**.

Install Support Stands

NOTE
For detailed assembly instructions, please see your appropriate support stand manual.

1. Fasten brackets **(Figure 17, item 1)** to support stand **(Figure 17, item 2)** with mounting screws, washers, and nuts **(Figure 17, item 3)**.

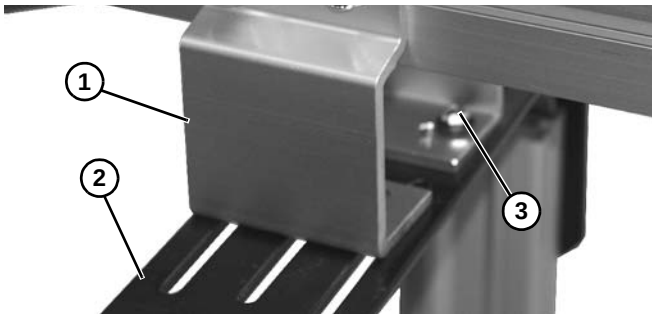

Figure 17

Belt Installation

Typical Belt Components **(Figure 18)**.

1	Chain Belt
2	Belt Rod

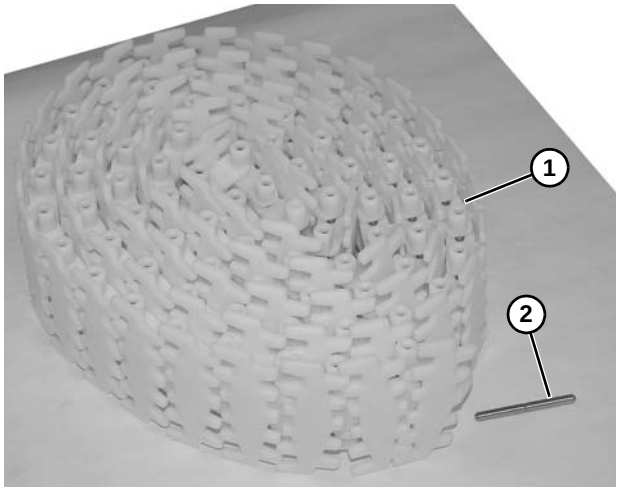

Figure 18

1. Position the belt on the conveyor frame.

2. Install the belt with direction arrow **(Figure 19, item 1)** pointing in direction of belt travel **(Figure 19, item 2)**. Install belt from under tail end **(Figure 19, item 3)** and onto cogs **(Figure 19, item 4)** of shaft.

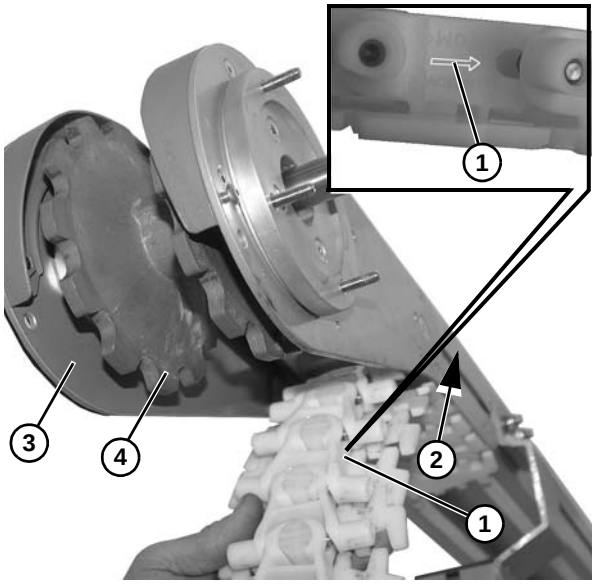

Figure 19

3. Continue wrapping belt **(Figure 20, item 1)** on top of idler tail retaining guide **(Figure 20, item 2)**, continuing to turn shaft **(Figure 20, item 3)** to guide belt around cogs **(Figure 20, item 4)** of shaft.

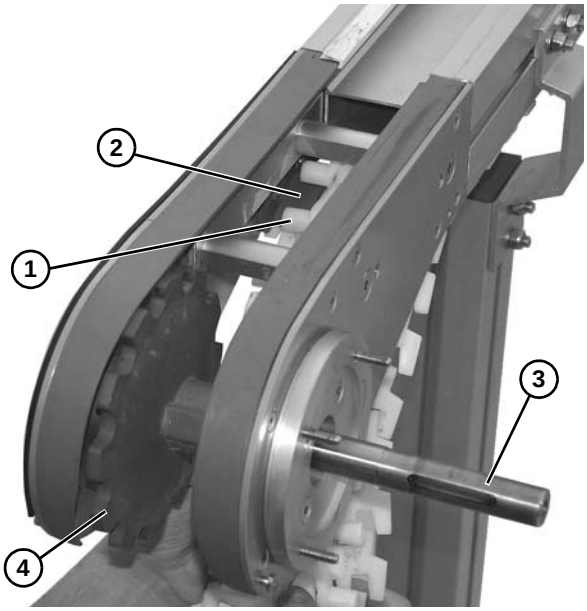

Figure 20

4. Insert the belt rod:

Standard Tail

- Install belt around drive end of conveyor and bring the ends of the belt **(Figure 22, item 1)** together.
- Insert rod **(Figure 22, item 2)**.

NOTE
*Before inserting belt rod to connect belt ends, be certain that the slack on belt is showing in slotted area **(Figure 21, item 1)** on conveyor drive end.*

- Use punch and hammer or belt removal tool #203480 to press pin just below flush with side of belt. Stop when pin detent is felt.

Figure 21

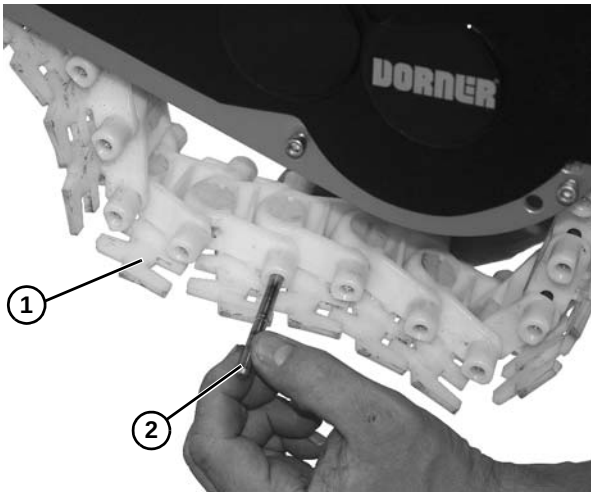

Figure 22

Weighted Take Up Tail

- Install belt around drive end of conveyor and bring the ends **(Figure 23, item 1)** of the belt together.
- Insert rod **(Figure 23, item 2)**.
- Use punch and hammer or belt removal tool #203480 to press pin just below flush with side of belt. Stop when pin detent is felt.

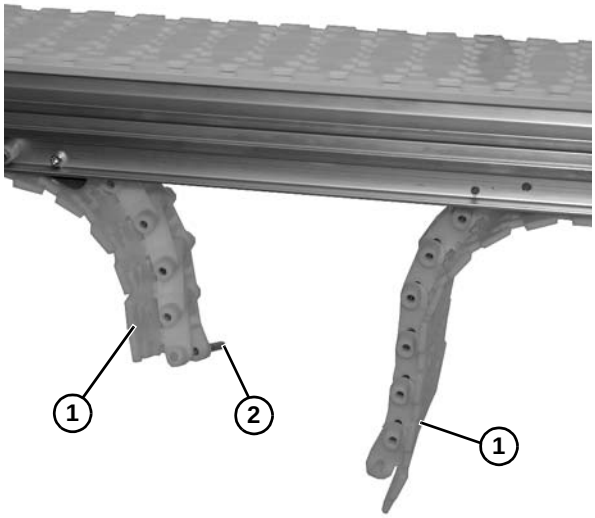

Figure 23

Weighted Take-Up

1. Install idler pulley assembly **(Figure 24, item 1)** onto belt **(Figure 24, item 2)**.

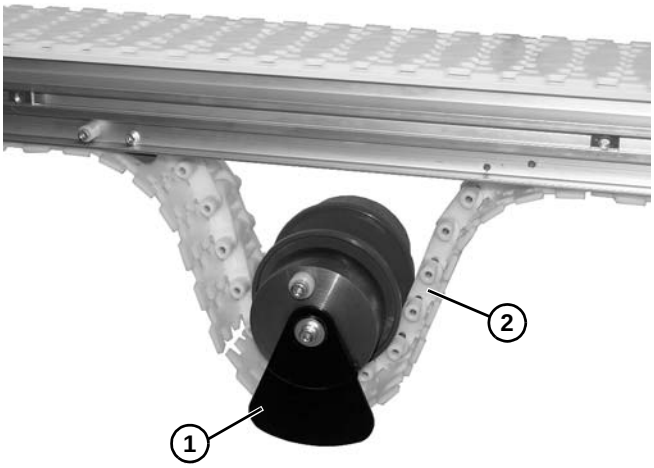

Figure 24

2. Make sure teeth on pulley and guard are facing mating teeth on take up box assembly.
3. Raise weighted take up box assembly, with plate **(Figure 25, item 1)** on idler pulley assembly on outside of outer plate **(Figure 25, item 2)** weighted take up assembly.

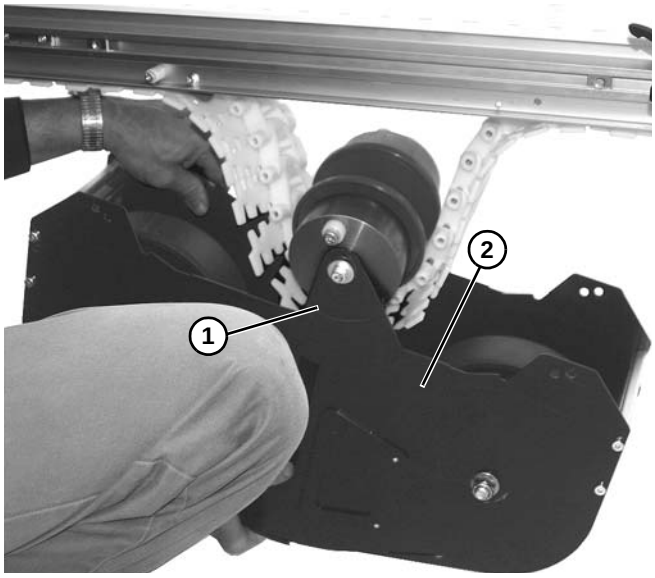

Figure 25

4. Raise weighted take up assembly **(Figure 26, item 1)** with notch **(Figure 26, item 2)** in assembly mating with stud **(Figure 26, item 3)** on conveyor frame.

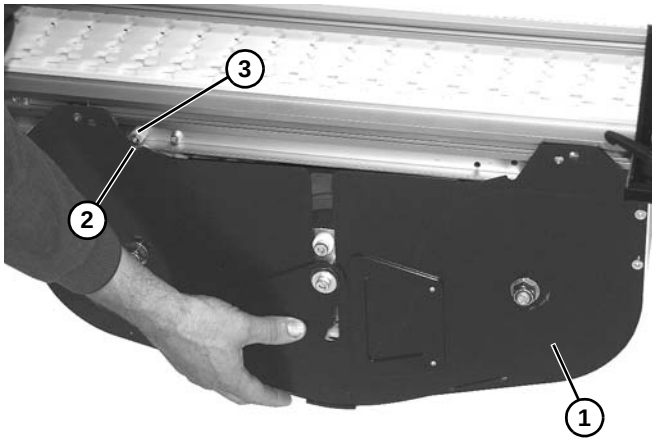

Figure 26

5. Install and tighten two hex head screws **(Figure 27, item 1)** on each side to secure assembly to frame.

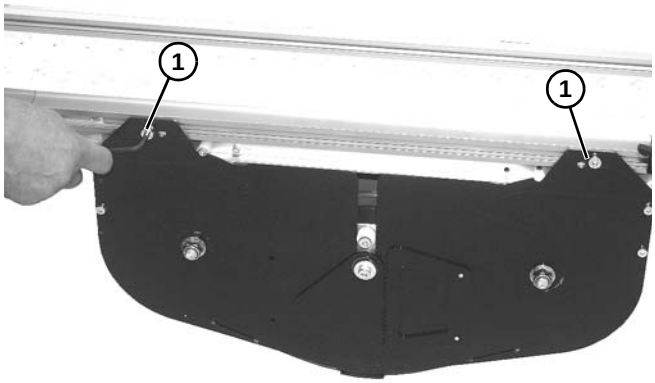

Figure 27

Top Running Drive

1. Install top running drive assembly **(Figure 28, item 1)** clamp plates into conveyor frame sections **(Figure 28, item 2)** by lining up clamp plates with slots in conveyor frame.

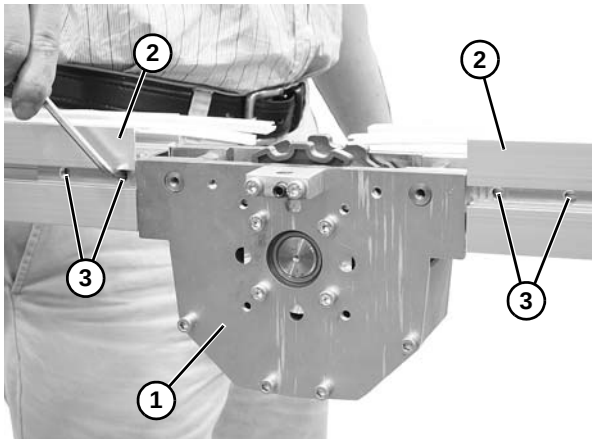

Figure 28

2. Secure with four set screws **(Figure 28, item 3)** on both sides of conveyor. Tighten all set screws 1/4 turn past contact with frame.
3. Install belt with the direction arrow pointing in the direction of belt travel.
4. Install belt around conveyor ends and bring the ends of the belt **(Figure 29, item 1)** together.

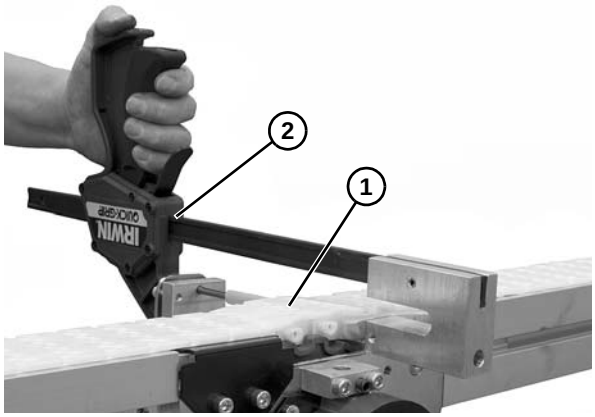

Figure 29

5. Insert the belt rod. Use a punch and hammer or belt removal tool #203480 **(Figure 29, item 2)** to press pin just below flush with side of belt. Stop when pin detent is felt.
6. Install drive motor mounting plate **(Figure 30, item 1)** using four hex head cap screws **(Figure 30, item 2)**.

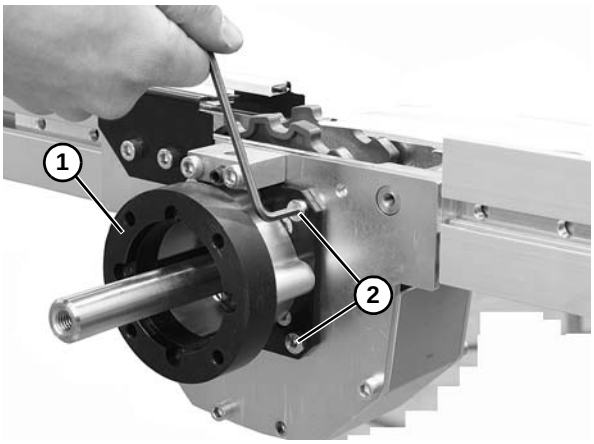

Figure 30

7. Install belt hold down tabs **(Figure 31, item 1)** to drive assembly **(Figure 31, item 2)** using four socket head screws **(Figure 31, item 3)**.

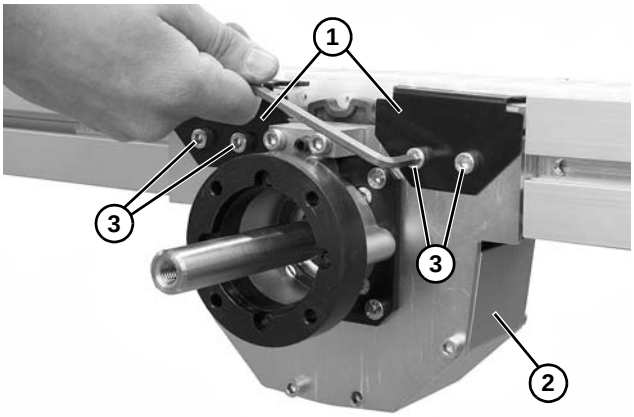

Figure 31

8. Repeat on opposite side.
9. Install belt hold down wheel **(Figure 32, item 1)** and tighten set screw **(Figure 32, item 2)**.

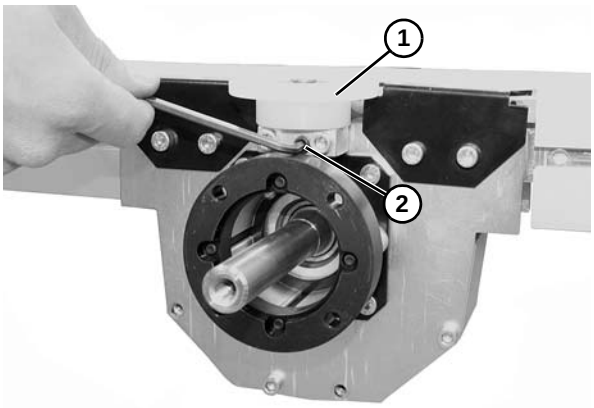

Figure 32

10. Install drive package **(Figure 33, item 1)** to drive motor mounting bracket **(Figure 33, item 2)** using four socket head screws **(Figure 33, item 3)**.

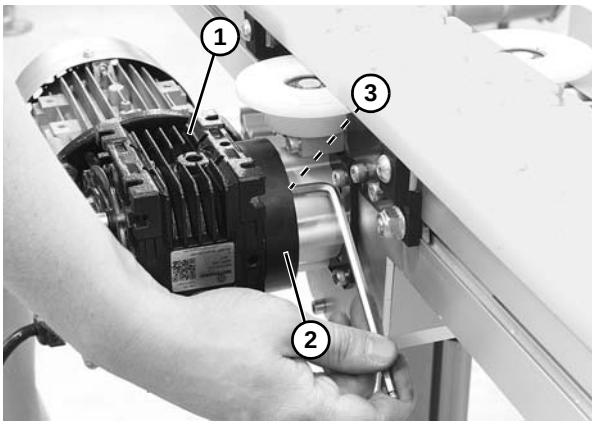

Figure 33

Install Guiding

All guiding must be located and installed by the end user.

Standard 1.5” Guiding

1. Install stud **(Figure 34, item 1)** onto retaining clip **(Figure 34, item 2)** with nut **(Figure 34, item 3)**.

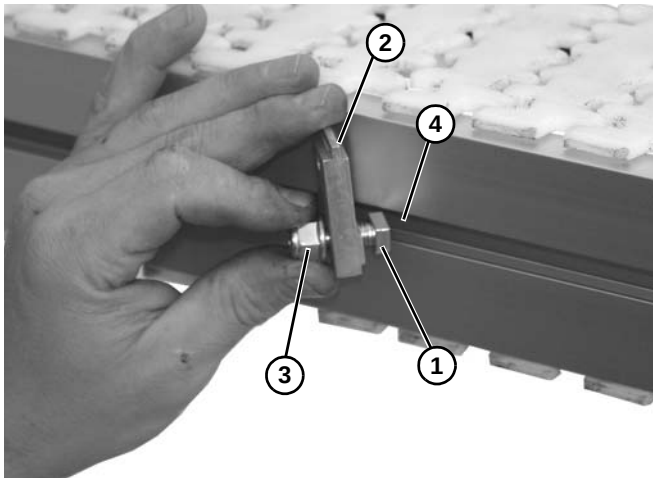

Figure 34

2. Install stud **(Figure 34, item 1)** into side rail channel **(Figure 34, item 4)**. The end clips should be no greater than 12" from end of the conveyor.

3. Fasten retaining clip **(Figure 35, item 1)** to conveyor with nut **(Figure 35, item 2)** on stud.

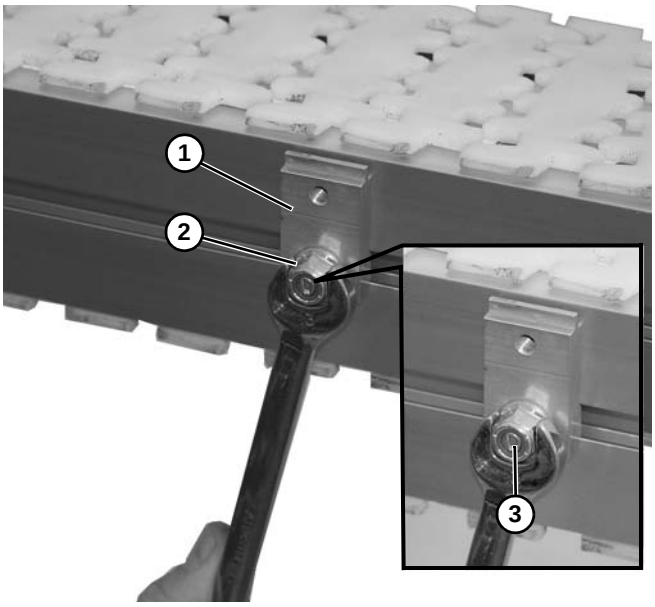

Figure 35

NOTE
*Be certain that slot **(Figure 35, item 3)** is close to vertical when finished tightening nut.*

4. Tighten nuts **(Figure 35, item 2)**.
5. Install guide **(Figure 36, item 1)** and retaining clip **(Figure 36, item 2)** to conveyor side rail with socket head screw **(Figure 36, item 3)**.

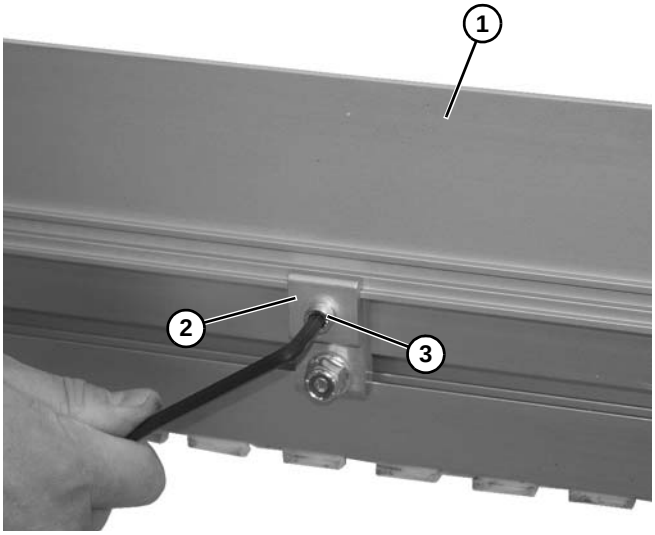

Figure 36

Fully Adjustable Guiding

1. Install stud **(Figure 37, item 1)** on guiding assembly **(Figure 37, item 2)** into side rail channel **(Figure 37, item 3)**. The end guiding assemblies should be no greater than 12" from end of the conveyor.

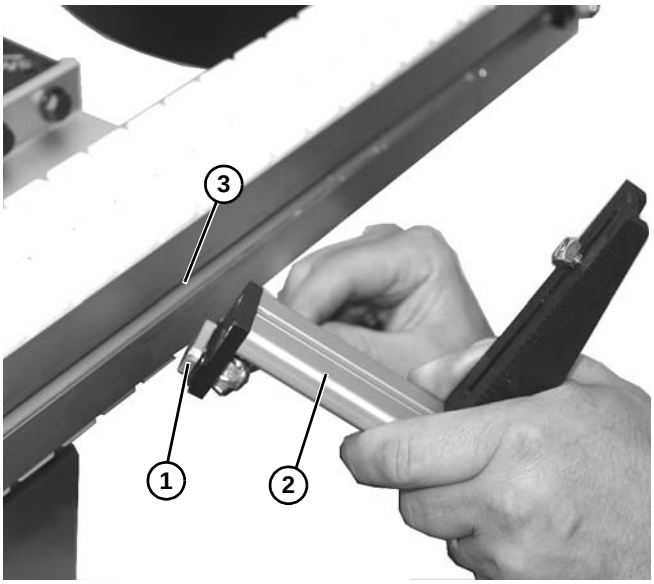

Figure 37

2. Tighten stud on guiding assembly **(Figure 38, item 1)** to conveyor with nut **(Figure 38, item 2)** on stud.

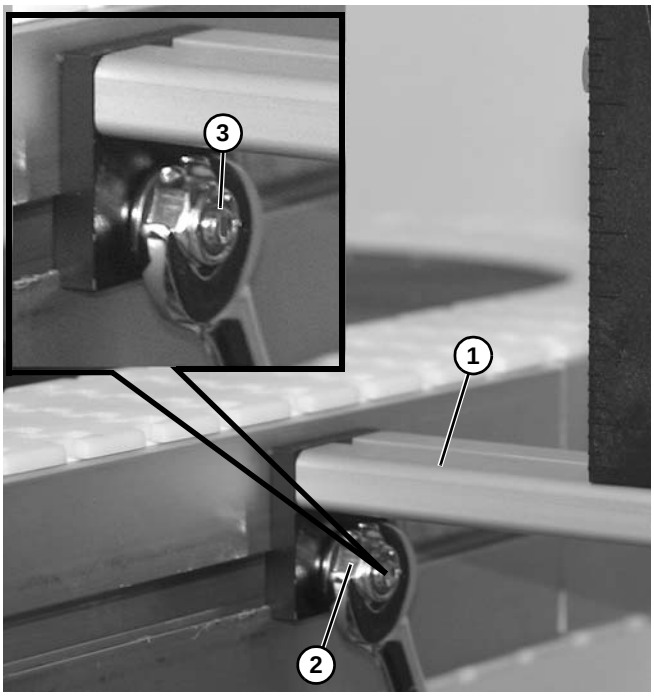

Figure 38

NOTE

*Be certain that slot **(Figure 38, item 3)** is close to vertical when finished tightening nut.*

3. Tighten nuts **(Figure 38, item 2)**.
4. Install guide rail **(Figure 39, item 1)** onto square nut **(Figure 39, item 2)** onto mounting bracket **(Figure 39, item 3)** with socket head screw **(Figure 39, item 4)** or handle **(Figure 40, item 1)** for tool-less guiding.

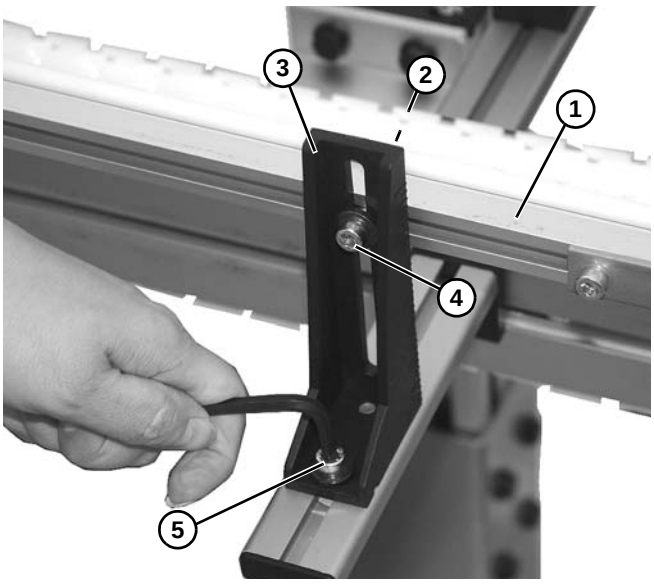

Figure 39

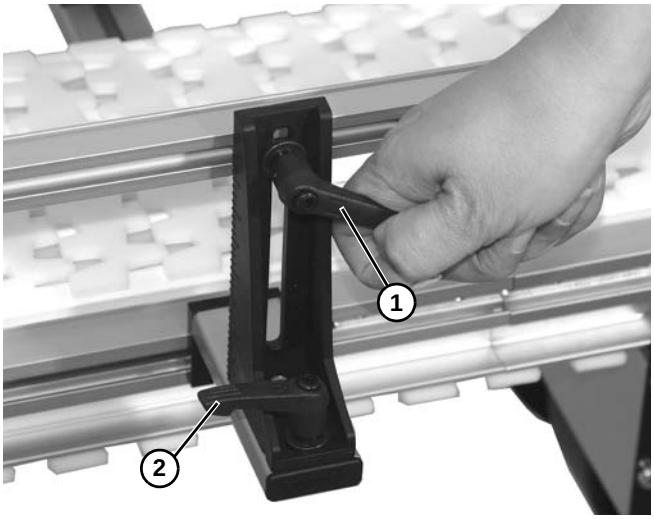

Figure 40

5. Loosen socket head screw **(Figure 39, item 5)** or handle **(Figure 40, item 2)** and adjust mounting bracket **(Figure 39, item 3)** as needed.

6. For curves, install inside of curve guide rail **(Figure 41, item 1)** to straight guide rails **(Figure 41, item 2)**. Tighten set screws **(Figure 41, item 3)**.

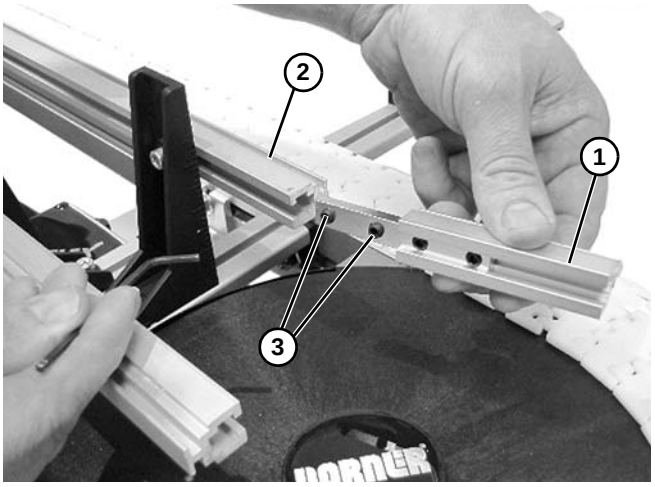

Figure 41

7. To install curve assembly guiding, start at one end of the conveyor and slide the guiding over the guide rails.
8. On the inside of the curve, install inner guiding **(Figure 42, item 1)** onto both of the inner guide rails **(Figure 42, item 2)**.

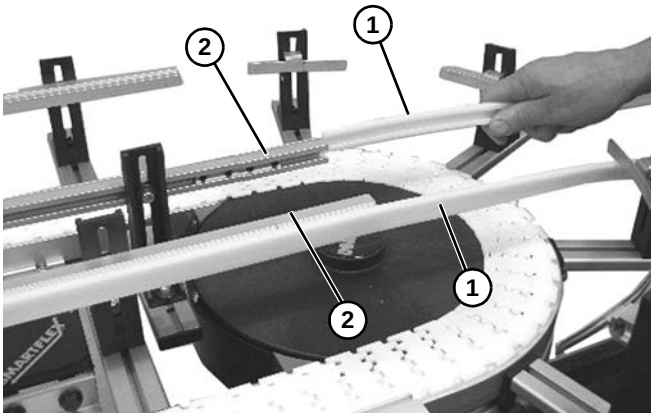

Figure 42

9. On outside of curve, install guiding **(Figure 43, item 1)** on the guide supports **(Figure 43, item 2)**.

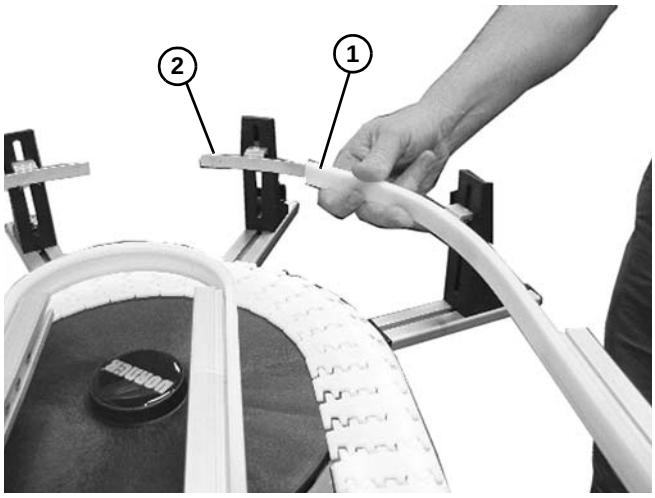

Figure 43

10. To adjust guiding width loosen screws **(Figure 39, item 5)** or handle **(Figure 40, item 2)**. Adjust to desired width. Tighten screw or handle.
11. To adjust guiding height loosen screws **(Figure 39, item 4)** or handle **(Figure 40, item 1)**. Adjust to desired height. Tighten screw or handle.

Install Drive Package

NOTE
For detailed assembly instructions, refer to the appropriate Drive Packages Installation, Maintenance and Parts Manual.

1. Install spacer (when applicable) **(Figure 44, item 1)**, washer **(Figure 44, item 2)**, and key **(Figure 44, item 3)** onto drive shaft.

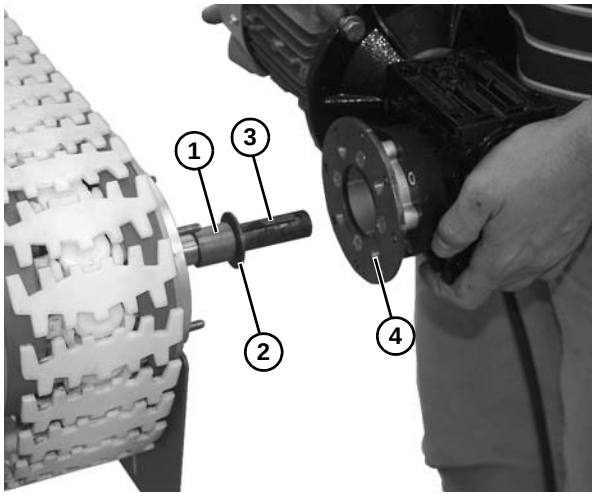

Figure 44

2. Attach the motor **(Figure 44, item 4)** onto the drive shaft.
3. Install four washers **(Figure 45, item 1)** and nuts **(Figure 45, item 2)** to secure motor to conveyor.

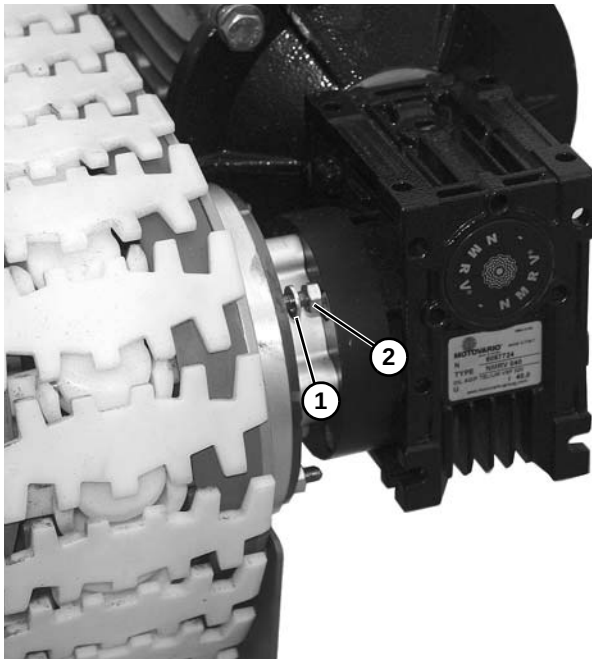

Figure 45

4. Install and tighten flat head screw **(Figure 46, item 1)** onto the drive shaft.

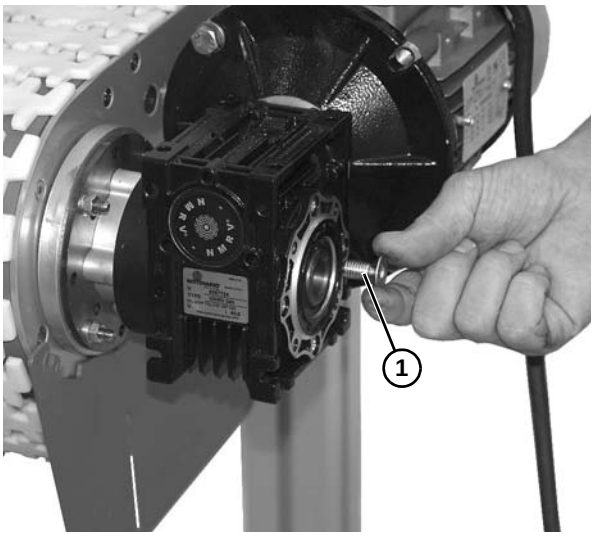

Figure 46

5. Install drive motor stand mounting bracket **(Figure 47, item 1)** onto the drive motor **(Figure 47, item 2)** with four washers and socket head screws **(Figure 47, item 3)**.

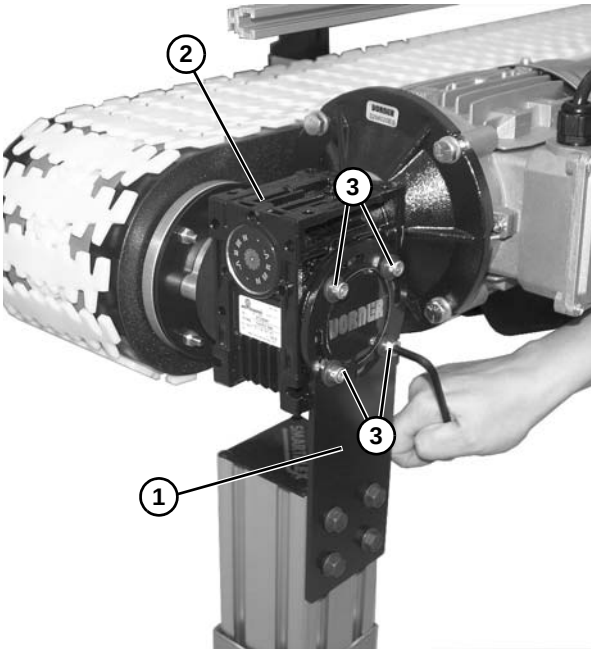

Figure 47

Required Tools

- 3/32” hex wrench
- 3 mm hex wrench
- 4 mm hex wrench
- 5 mm hex wrench
- 6 mm hex wrench
- 8 mm hex wrench
- 10 mm wrench
- 13 mm wrench
- 16 mm wrench
- Belt Removal Tool #203480

Checklist

- Keep service parts on hand. Refer to the "Service Parts" section starting on page 44 for recommendations.
- Replace any worn or damaged parts.

Lubrication

No lubrication is required. Replace bearings if worn.

Maintaining the Conveyor Belt

Troubleshooting

NOTE

Visit www.dorner.com for complete list of troubleshooting solutions.

Inspect conveyor belt for:

- Surface cuts or wear
- Skipping

Damage to belt links or rods, surface cuts and / or wear indicate:

- Sharp or heavy parts impacting belt
- Jammed parts
- Accumulated dirt
- Foreign material inside the conveyor
- Improperly positioned accessories

Skipping indicates:

- Excessive load on belt
- Worn spindle or impacted dirt on drive spindle

Conveyor Belt Replacement

⚠ WARNING

SEVERE HAZARD!

LOCK OUT POWER before removing guards or performing maintenance. Exposed moving parts can cause serious injury.

Replacing a Section of Belt

1. Use a punch and hammer or belt removal tool #203480 to push the belt rod **(Figure 48, item 1)** out by striking the rod end.

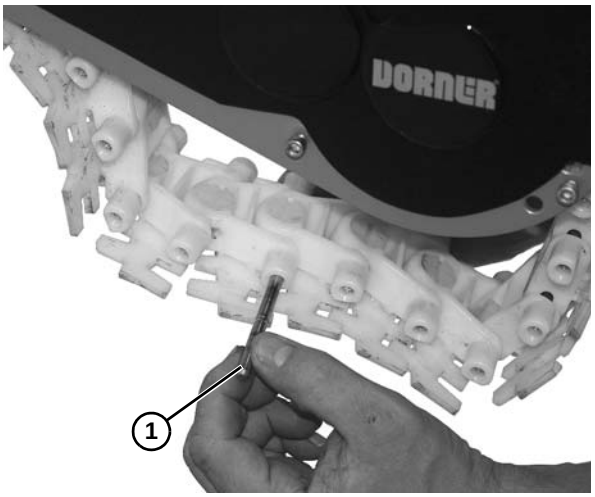

Figure 48

⚠ WARNING

SEVERE HAZARD!

If conveyor belt is damaged or worn, replace belt section.

2. Remove the belt rods on both sides of the section of belt being replaced.
3. Replace old section of belt.

⚠ CAUTION

DO NOT reuse belt rods that are damaged or show signs of wear.

NOTE

*Before inserting belt rod to connect belt ends, be certain that the slack on belt is showing in slotted area **(Figure 49, item 1)** on convey or drive end.*

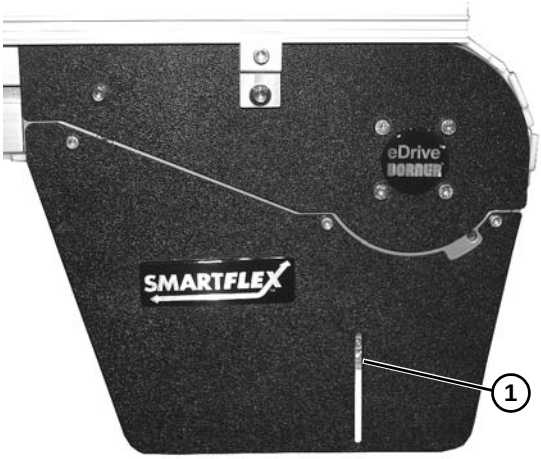

Figure 49

Replacing the Entire Belt

1. Use a punch and hammer or belt removal tool #203480 to push the belt rod **(Figure 50, item 1)** out by striking the rod end.

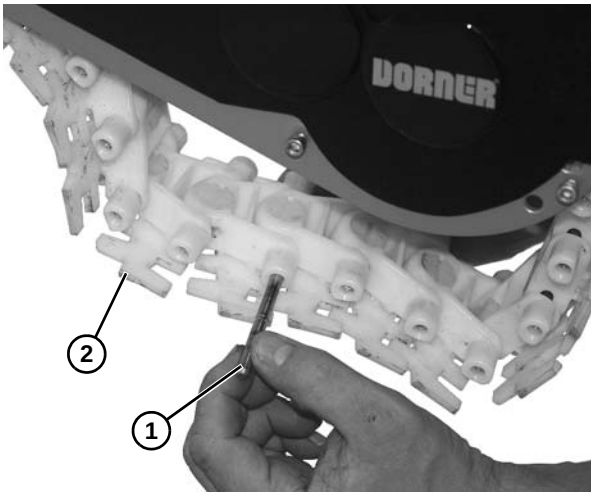

Figure 50

2. Slide the old belt **(Figure 50, item 2)** off the conveyor frame.
3. Replace the old belt with a new one. Refer to "Belt Installation" on page 15.

NOTE

Drive spindle shaft assembly replacement is recommended with belt replacement (see "Drive Spindle Shaft Assembly" on page 29).

⚠ CAUTION

DO NOT reuse belt rods that are damaged or show signs of wear.

Conveyor Belt Tensioning

⚠ WARNING

SEVERE HAZARD!

LOCK OUT POWER before removing guards or performing maintenance. Exposed moving parts can cause serious injury.

NOTE

Belt should not be stretched during installation. A proper length of belt can be installed by interlocking the ends by hand without excess links.

1. Remove one or more belt links to take up tension. Refer to "Replacing a Section of Belt" on page 23.

NOTE

*Before inserting belt rod to connect belt ends, be certain that the slack on belt is showing in slotted area **(Figure 51, item 1)** on convey or drive end.*

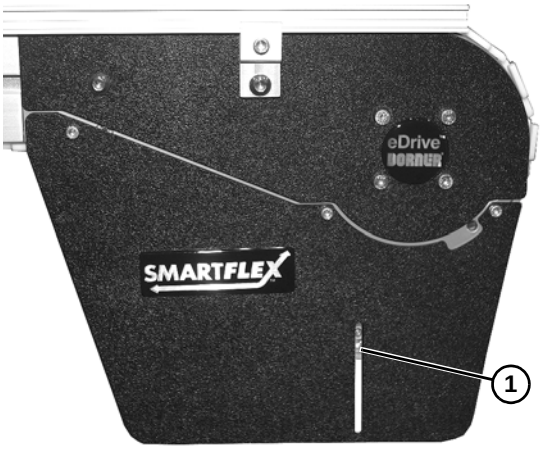

Figure 51

Wear Strip Removal

Replace the wear strips if they become worn.

NOTE
Top and bottom wear strips are shipped pinned/attached at various places on conveyor.

1. Remove belt. See “Conveyor Belt Replacement” on page 23.
2. Remove wear strip **(Figure 52, item 1)** from top of frame assembly up to pinned end **(Figure 52, item 2)**.

Figure 52

3. Cut and remove worn wear strip section and replace with new wear strip. See “Wear Strip Installation” on page 25.
4. Remove lower wear strips, as needed, repeat procedure used for upper wear strips.

Wear Strip Installation

1. Remove wear strips. See “Wear Strip Removal” on page 25.

Attaching Wear Strip on Straight Frame

1. Start the wear strips **(Figure 53, item 1)** at an idler end **(Figure 53, item 2)** of conveyor. Separate the top and bottom flange of the wear strip at the end of rail and press into place.

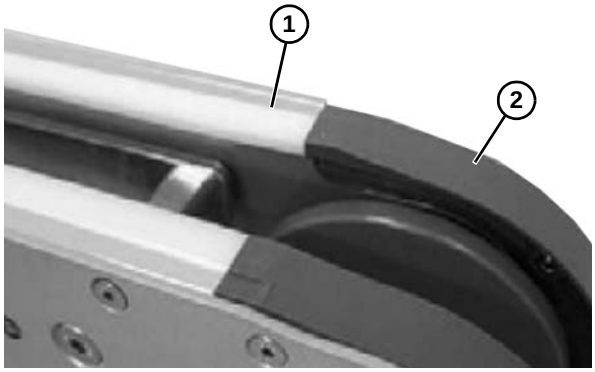

Figure 53

2. Make sure the wear strip **(Figure 54, item 1)** is properly mounted and snaps onto the frame **(Figure 54, item 2)**. Please identify the longer flange of the wear strip must always face the inside of the conveyor.

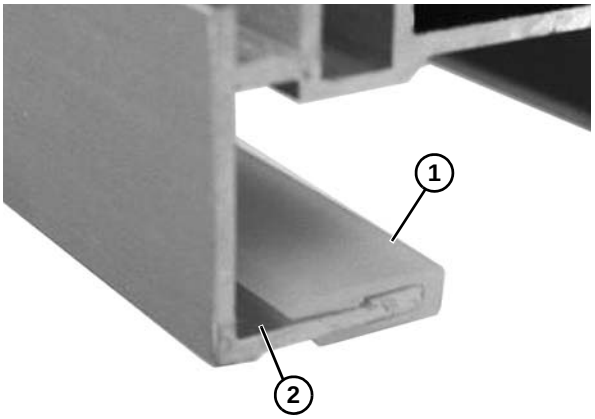

Figure 54

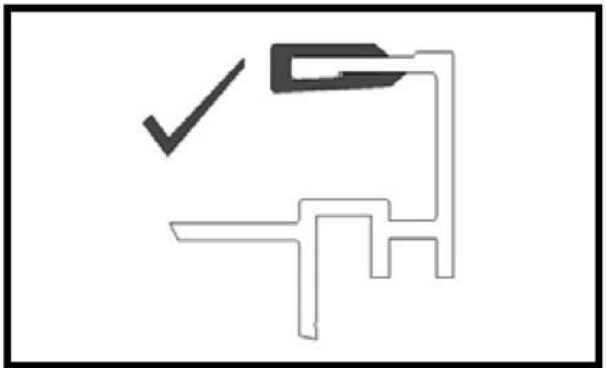

Correct Installation

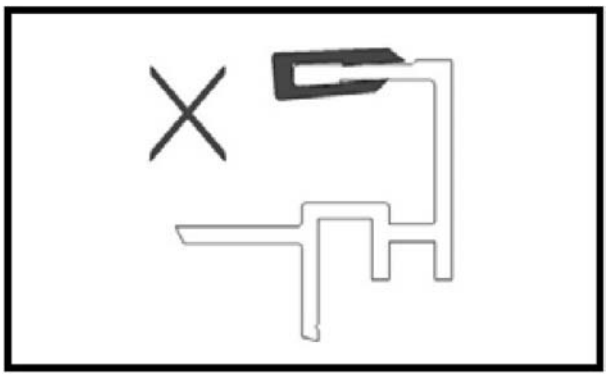

Wrong Installation

Attaching Wear Strip on Conveyor Frame

1. Cut both wear strip **(Figure 55, item 1)** ends in a 45° angle. The beginning of a new wear strip (in the direction of travel) must cut back a small angle.

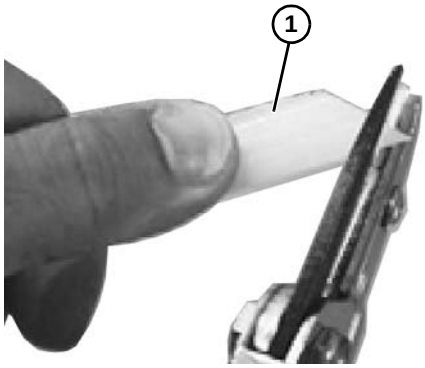

Figure 55

2. Allow a space of approximately 1/16” to 1/8” **(Figure 56, item 1)** between two wear strip ends. The travel direction is indicated by arrow.

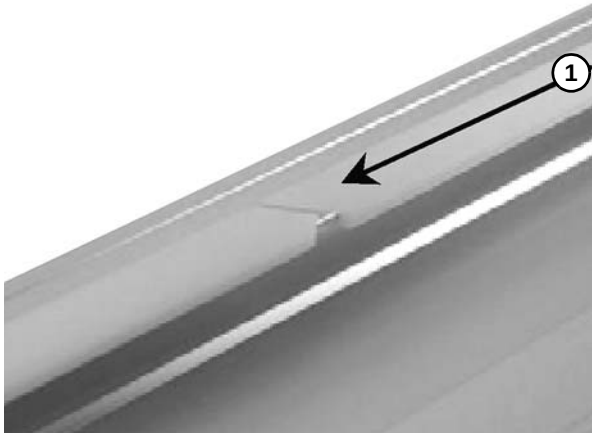

Figure 56

3. Do not place two wear strip joints opposite each other. Make sure there is a distance of at least 4” **(Figure 57, item 1)** between them to make the chain run smoother. This does not apply to a wear strip that begins by an idler unit or after a drive tail, where joints are always parallel.

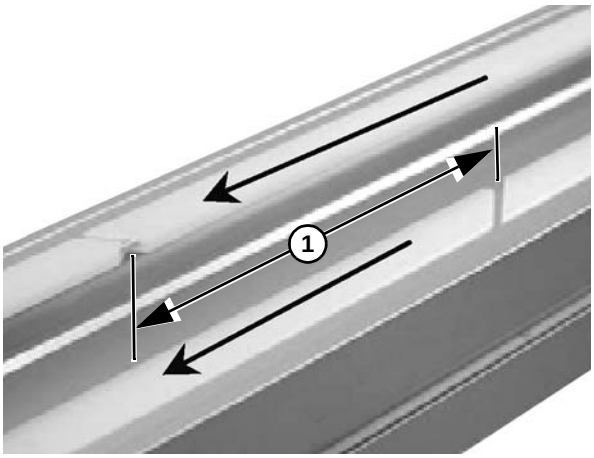

Figure 57

NOTE

Try to let the wear strip run in as continuous lengths as possible by reducing number of breaks, except in circumstances stated below:

- *It is recommended to use short wear strips (75” - 100”) where chemicals may have an effect on the wear strip composition.*
- *It is important to cut the wear strip and allow for elongation in high load areas. Cutting is required in wheel bends (see following page), at idler tails and where the conveyor will be heavily loaded, especially at drive unit. This prevents the wear strip from stretching out and entering into the drive tail, which may block the chain movement.*
- *Never join wear strip in horizontal or vertical bends, since forces are higher on the wear strip side in these sections. Instead, place the joint before the bend.*
- *Avoid joining wear strips on top of the conveyor frame joints.*

Attaching Wear Strip at Wheel Bend

1. Cut the wear strip end flat **(Figure 58, item 1)**. Make sure there is no gap created at the plastic molding part.

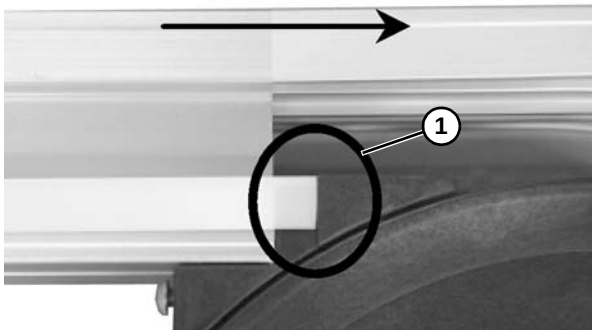

Figure 58

2. The step is applied onto out feed end **(Figure 59, item 1)** as well.

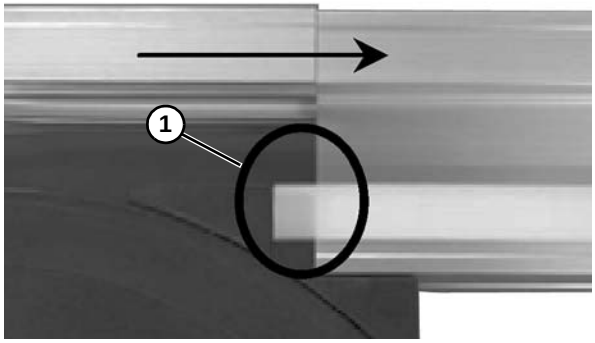

Figure 59

3. In the outer bend **(Figure 60, item 1)**, make sure that the wear strip is properly connected to the conveyor frame.

Figure 60

Attaching Wear Strip

1. Attach wear strip replacement tool **(Figure 61, item 1)** over wear strip **(Figure 61, item 2)** and frame near the beginning of each wear strip section. Tightly secure in place.

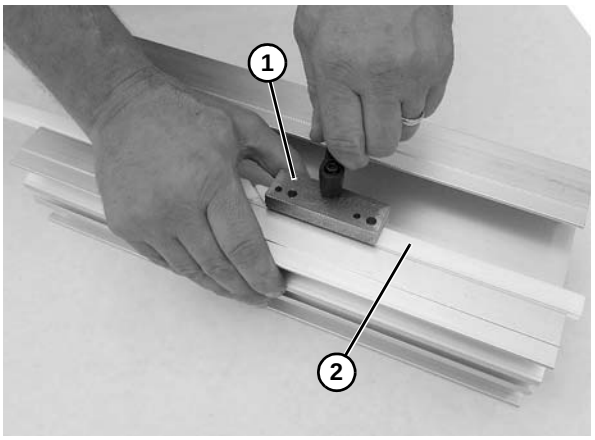

Figure 61

2. Using the wear strip replacement tool **(Figure 62, item 1)** drill two holes through the two small location holes **(Figure 62, item 2)** through the wear strip and frame using the #18 drill bit from the wear strip replacement kit.

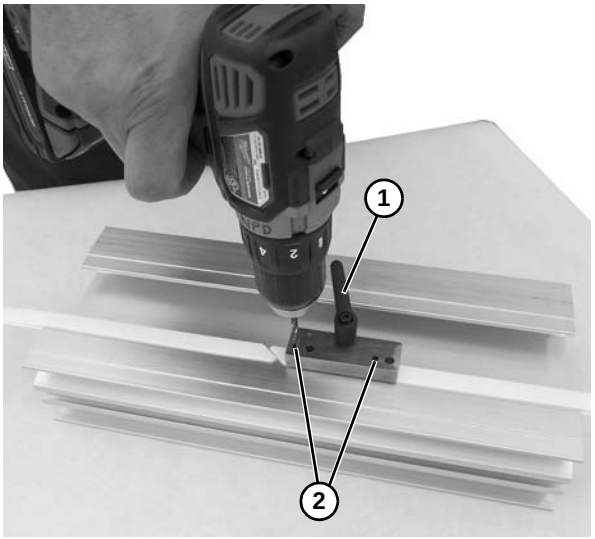

Figure 62

3. Remove debris from conveyor frame.
4. Relocate wear strip replacement tool to align the two larger guide holes with the holes drilled in the frame.

5. Pressing down firmly, install nylon set screws **(Figure 63, item 1)** through larger guide holes **(Figure 63, item 2)** into conveyor frame.

NOTE
Nylon set screw should be almost flush with the wear strip top when installed correctly.

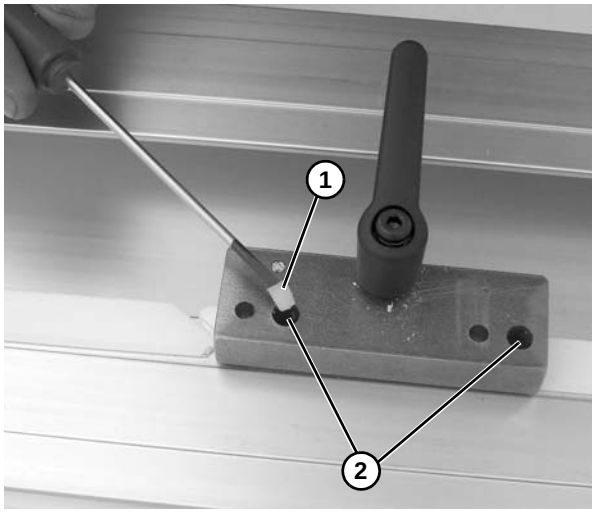

Figure 63

6. Using a file, scrape off the top of the nylon set screw above the wear strip **(Figure 64, item 1)** to assure a smooth surface for the belt.

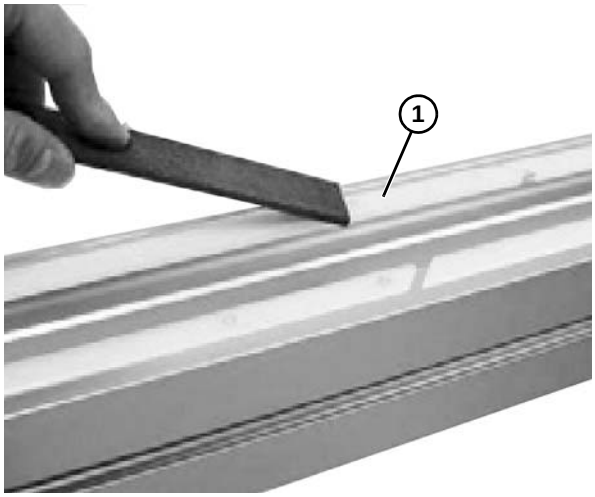

Figure 64

Idler Pulley Assembly

⚠ WARNING
Exposed moving parts can cause severe injury. LOCK OUT POWER before removing guards or performing maintenance.

1. Remove four (4) head plate fastening screws **(Figure 65, item 1)** and remove cover plate **(Figure 65, item 2)**. Repeat on opposite side of idler tail assembly.

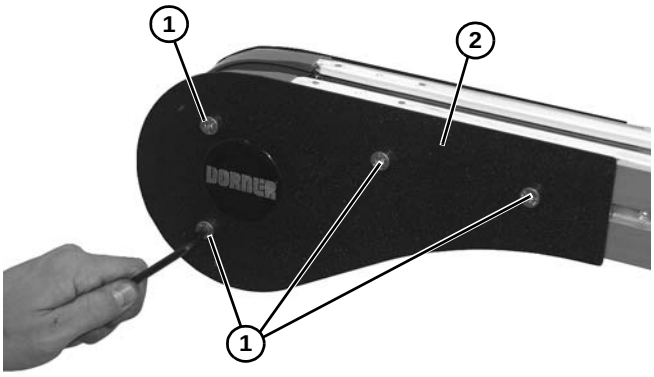

Figure 65

2. Remove two flat head screws **(Figure 66, item 1)** from idler head plate assembly.

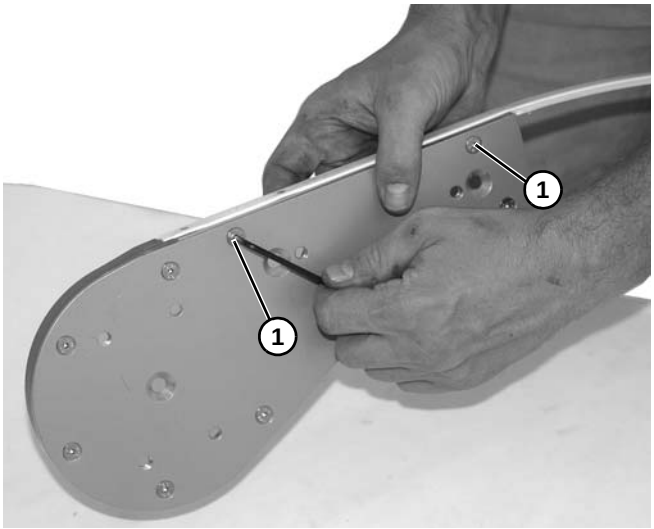

Figure 66

3. Remove three flat head screws **(Figure 67, item 1)**.

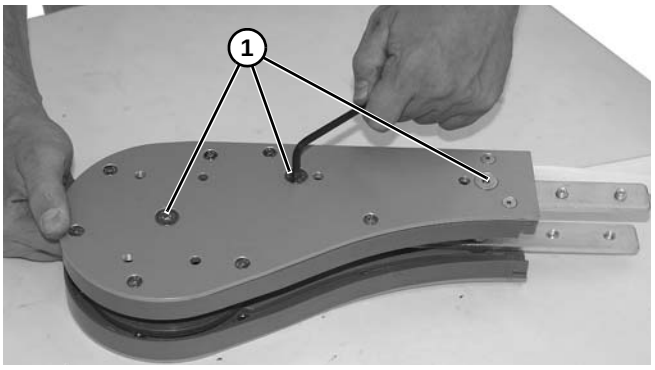

Figure 67

4. Remove the head plate **(Figure 68, item 1)** from the idler end, making note of two spacers **(Figure 68, item 2)** on idler head plate assembly.

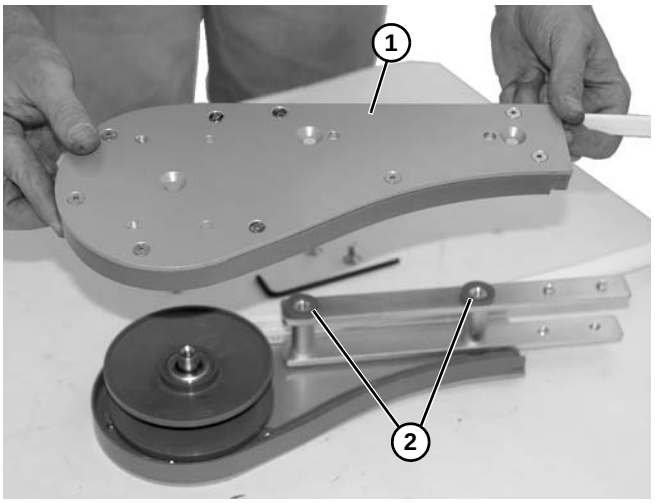

Figure 68

5. Remove flat head screw **(Figure 69, item 1)** and remove idler pulley **(Figure 69, item 2)** from idler head plate assembly.

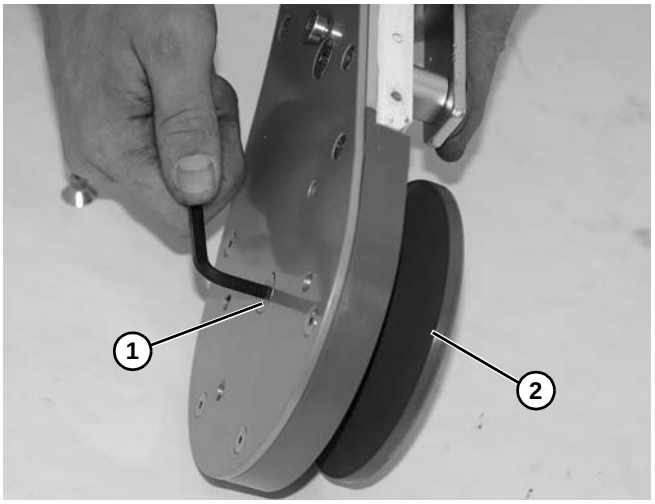

Figure 69

6. Install components reverse of removal.

Drive Spindle Shaft Assembly

⚠ WARNING

Exposed moving parts can cause severe injury. LOCK OUT POWER before removing guards or performing maintenance.

1. Remove the gearmotor. For detailed instructions, refer to the appropriate drive package manual.
2. Loosen two socket head set screws **(Figure 70, item 1)** on each side of conveyor, and remove the drive tail assembly **(Figure 70, item 2)** from the conveyor frame **(Figure 70, item 3)**.

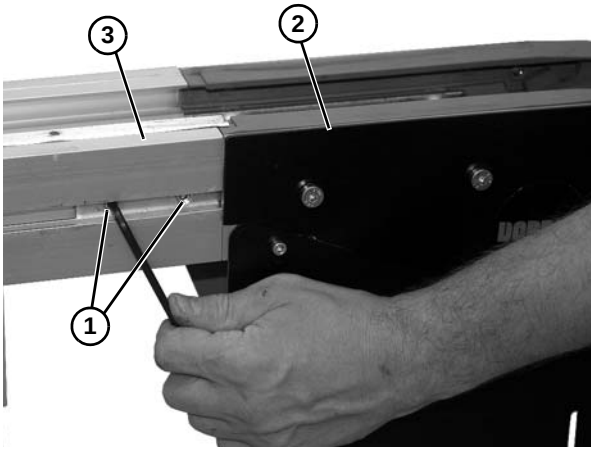

Figure 70

3. Remove two (2) head plate cover fastening screws **(Figure 71, item 1)** and remove cover plate **(Figure 71, item 2)**.

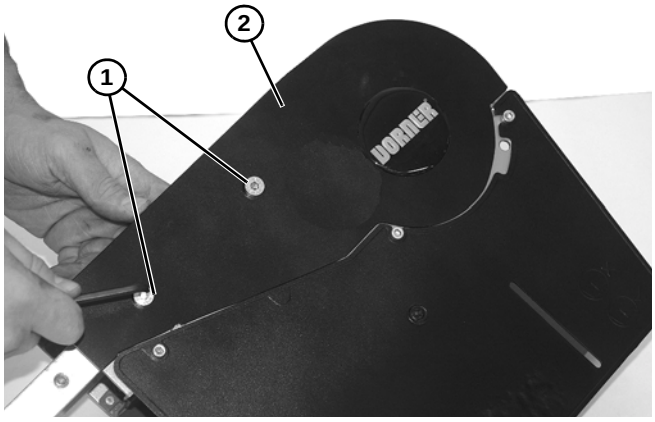

Figure 71

4. Remove four (4) socket head screws **(Figure 72, item 1)** on side of drive spindle.

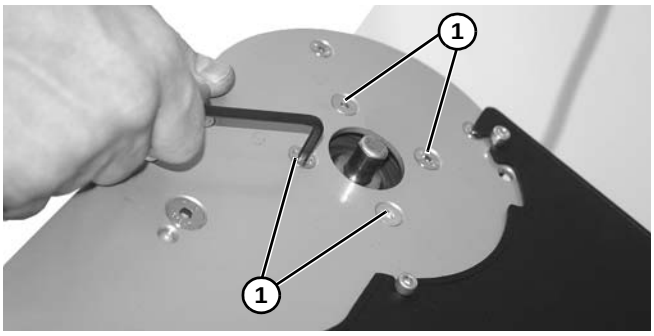

Figure 72

5. Remove two (2) socket head screws **(Figure 73, item 1)** on side of drive spindle.

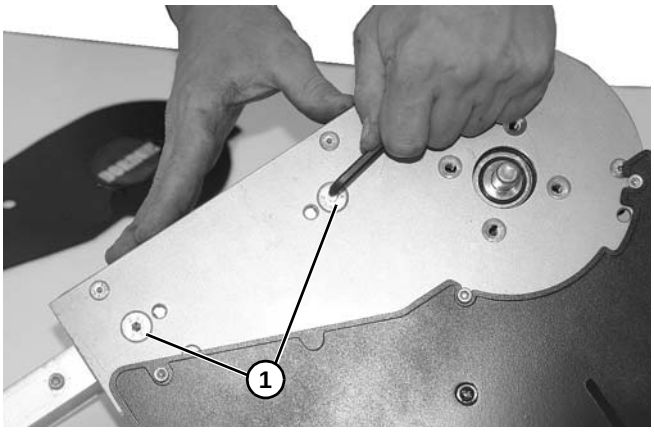

Figure 73

6. Remove the head plate **(Figure 74, item 1)** from the drive end, making note of two spacers **(Figure 74, item 2)** on idler head plate assembly.

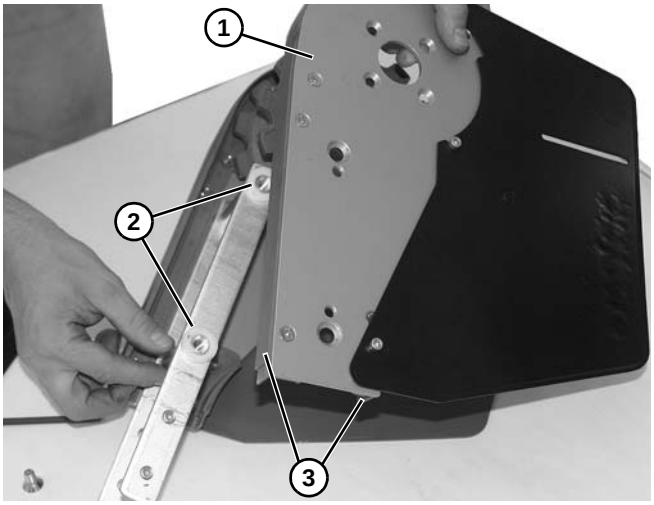

Figure 74

7. To remove upper and lower retaining guides **(Figure 74, item 3)**, see "Retaining Guide Replacement" on page 30.

8. Remove spindle shaft assembly **(Figure 75, item 1)** from idler head plate assembly.

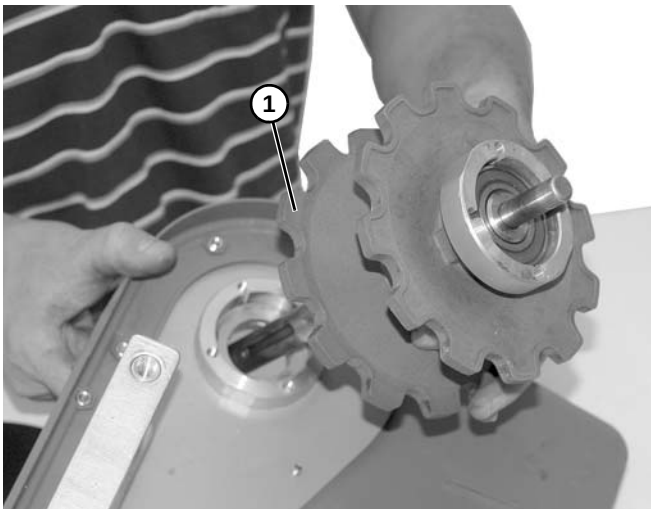

Figure 75

9. Install components reverse of removal.

Retaining Guide Replacement

Drive End

1. Remove drive spindle shaft assembly. See "Drive Spindle Shaft Assembly" on page 29.
2. Remove three socket head screws **(Figure 76, item 1)** and remove drive plate guard **(Figure 76, item 2)** from drive plate **(Figure 76, item 3)**.

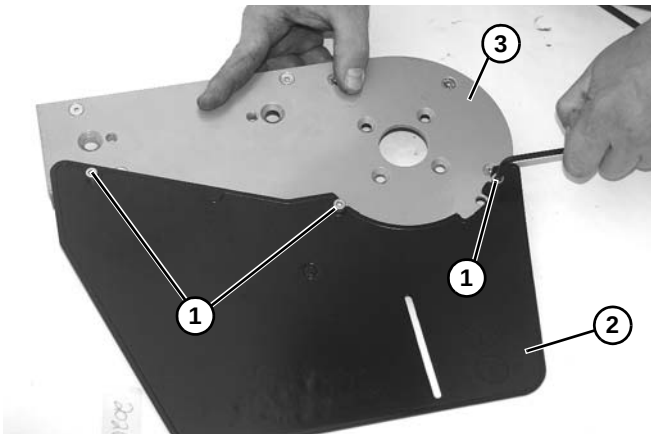

Figure 76

3. Remove two socket head screws **(Figure 77, item 1)**.

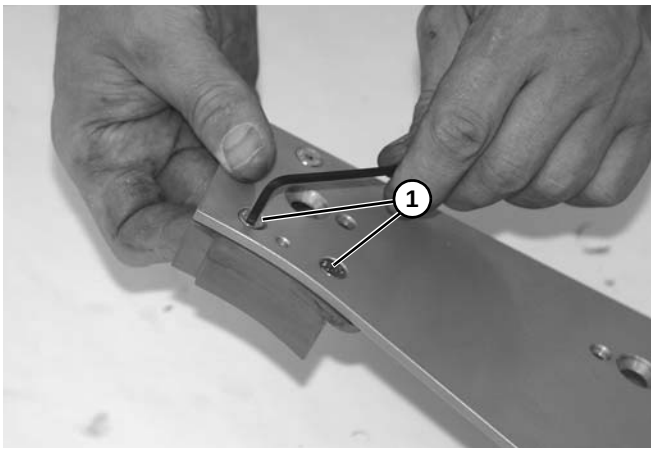

Figure 77

4. Remove lower retaining guide **(Figure 78, item 1)** from drive plate **(Figure 78, item 2)**.

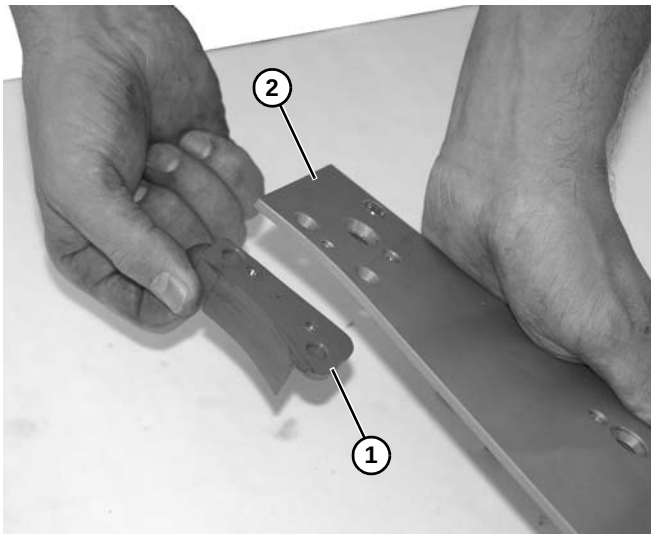

Figure 78

5. Remove five (5) socket head screws **(Figure 79, item 1)**.

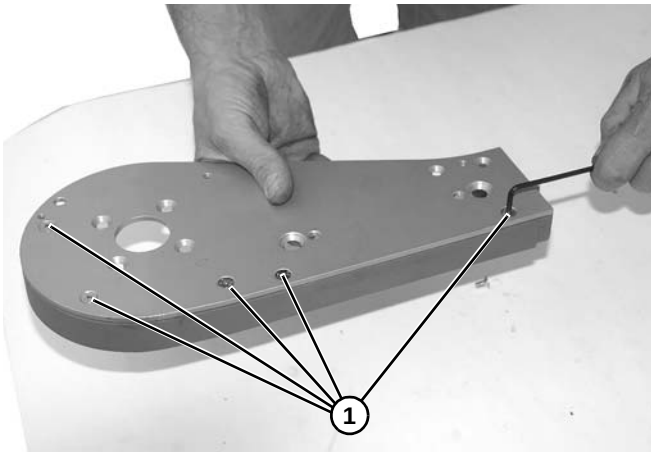

Figure 79

6. Remove upper retaining guide **(Figure 80, item 1)** from drive plate **(Figure 80, item 2)**.

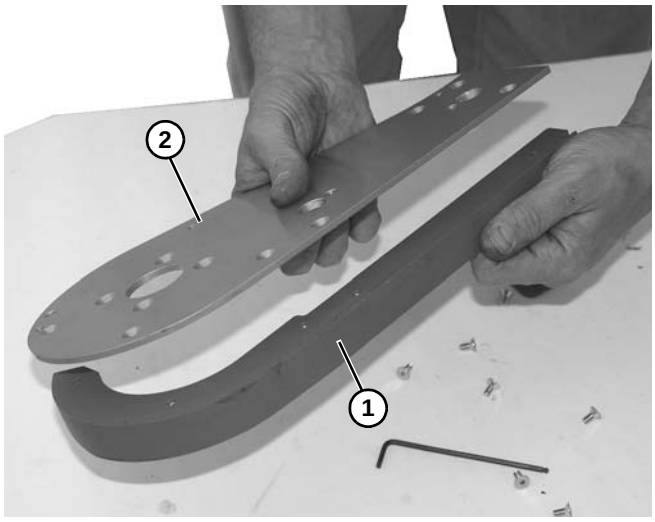

Figure 80

7. Install components reverse of removal.

Idler End

1. Remove idler pulley assembly. See “Idler Pulley Assembly” on page 28.
2. Remove seven (7) socket head screws **(Figure 81, item 1)** from idler head plate assembly.

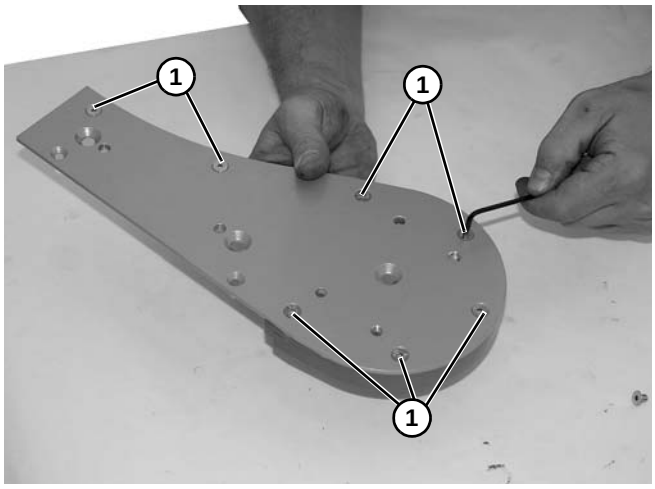

Figure 81

3. Remove retaining guide **(Figure 82, item 1)** from idler head plate assembly **(Figure 82, item 2)**. Replace components, as needed.

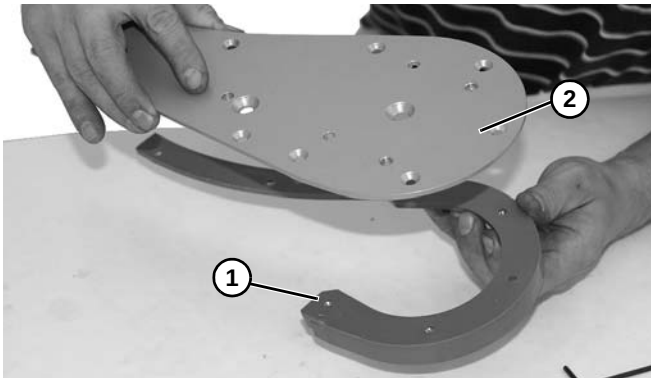

Figure 82

4. Install components reverse of removal.

Top Running Drive

1. Remove four socket head screws **(Figure 83, item 1)**. Remove drive package **(Figure 83, item 2)** from drive motor mounting bracket **(Figure 83, item 3)**.

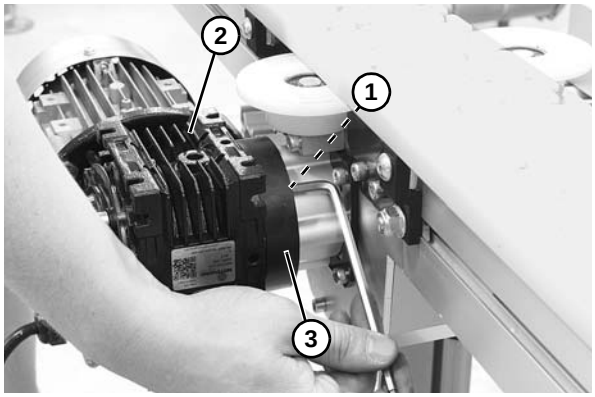

Figure 83

2. Loosen set screw **(Figure 84, item 1)** and remove belt hold down wheel **(Figure 84, item 2)**.

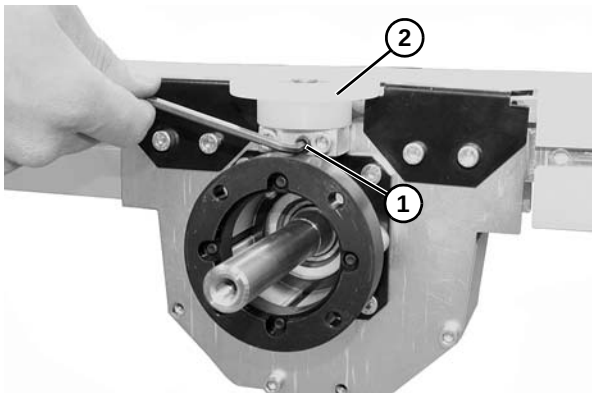

Figure 84

3. Repeat on opposite side.

4. Remove four socket head screws **(Figure 85, item 1)** securing belt hold down tabs **(Figure 85, item 2)** to drive assembly **(Figure 85, item 3)**.

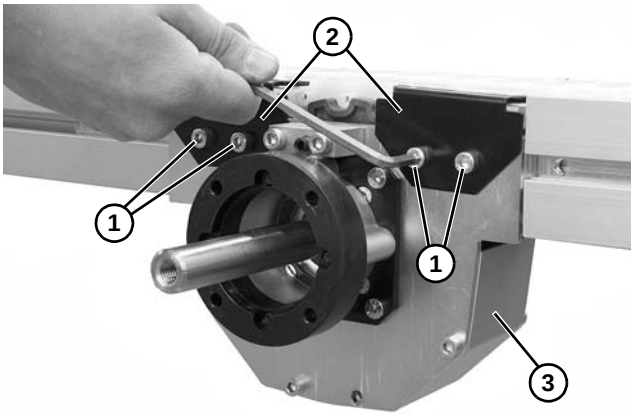

Figure 85

5. Repeat on opposite side.
6. Use belt removal tool #203480 **(Figure 86, item 1)** or a punch and hammer to push the belt rod out by striking the rod end.

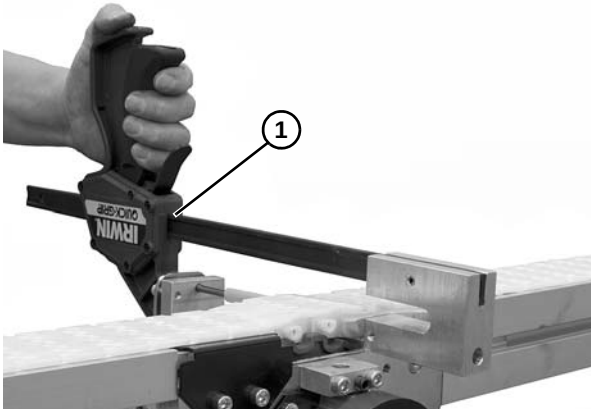

Figure 86

⚠ WARNING

SEVERE HAZARD!

If conveyor belt is damaged or worn, replace belt section.

7. Remove four hex head cap screws **(Figure 87, item 1)** and remove drive motor mounting plate **(Figure 87, item 2)**.

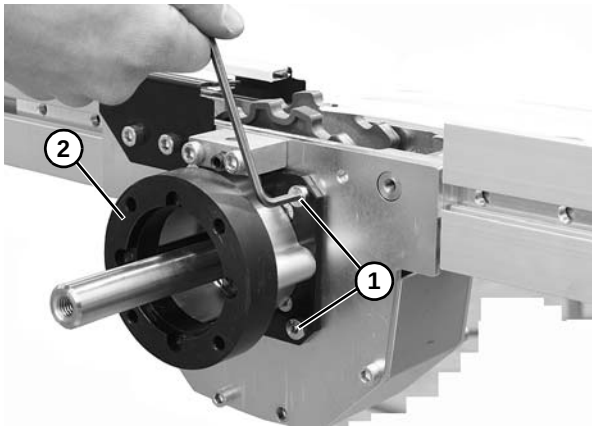

Figure 87

8. Loosen set screws **(Figure 88, item 1)** on both sides of conveyor.

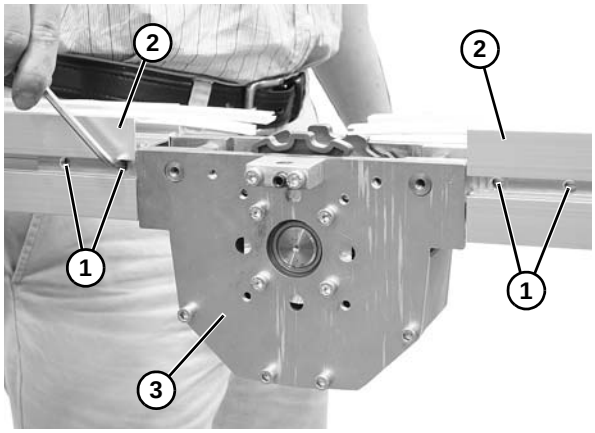

Figure 88

9. Separate conveyor halfs **(Figure 88, item 2)** and remove drive assembly **(Figure 88, item 3)**.

10. Remove four socket head screws **(Figure 89, item 1)**.

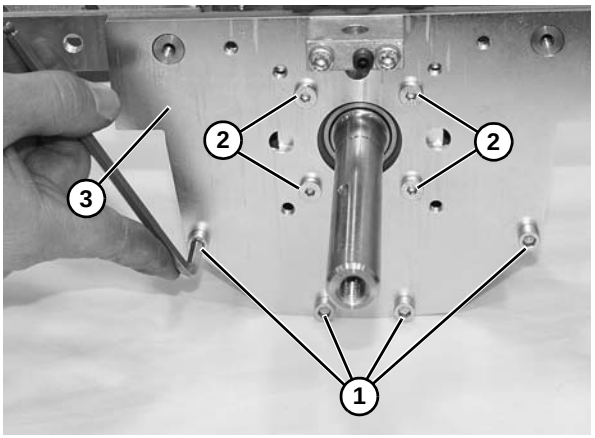

Figure 89

11. Remove four low head cap screws **(Figure 89, item 2)** and remove side plate **(Figure 89, item 3)**.
12. Remove four low head cap screws securing spindle assembly to side plate on the opposite side.
13. Replace spindle assembly.

Curve Assembly

⚠ WARNING

Exposed moving parts can cause severe injury. LOCK OUT POWER before removing guards or performing maintenance.

1. Remove socket head screw **(Figure 90, item 1)** and socket head screw **(Figure 90, item 2)** from corner wheel assembly pinch bracket **(Figure 90, item 3)**.

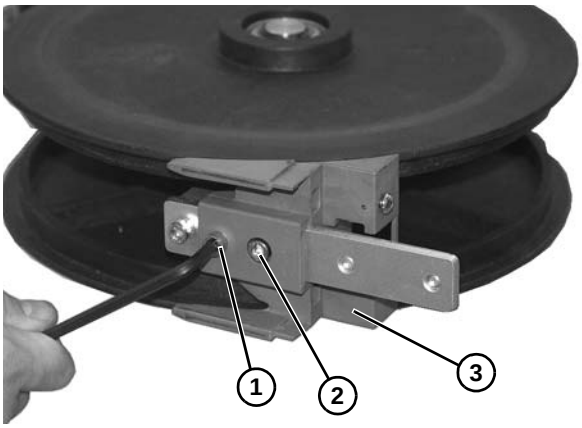

Figure 90

2. Install components reverse of removal.

Weighted Take-Up

1. Remove two socket head screws **(Figure 91, item 1)** on each side securing assembly to frame.

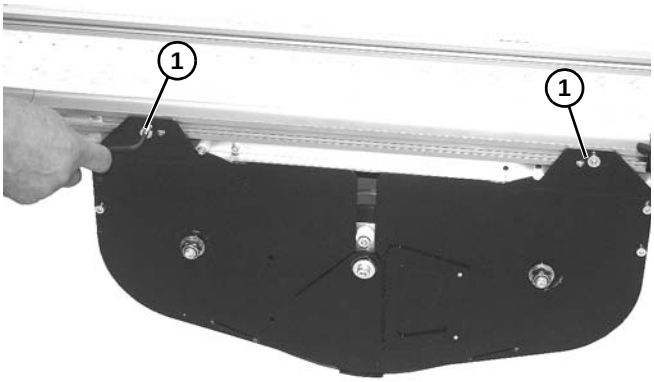

Figure 91

2. Lower weighted take up assembly **(Figure 92, item 1)** from conveyor **(Figure 92, item 2)** by disengaging locking teeth **(Figure 92, item 3)** on both sides.

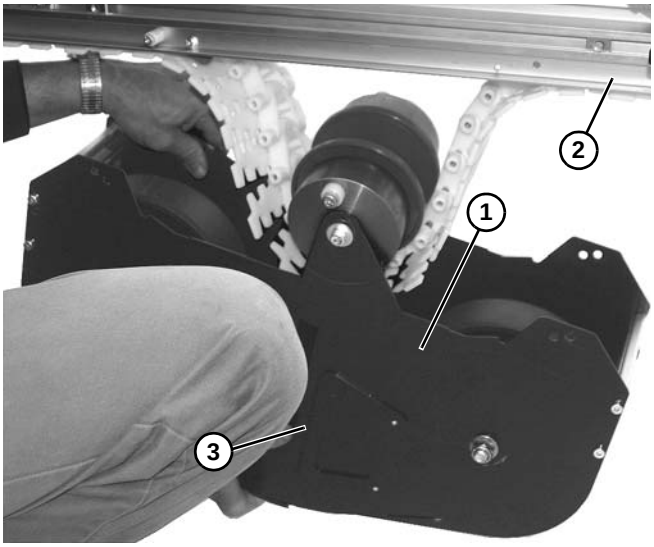

Figure 92

3. Use two wrenches to remove nut **(Figure 93, item 1)** on bolt securing wheel **(Figure 93, item 2)** onto weighted take up assembly housing **(Figure 93, item 3)**.

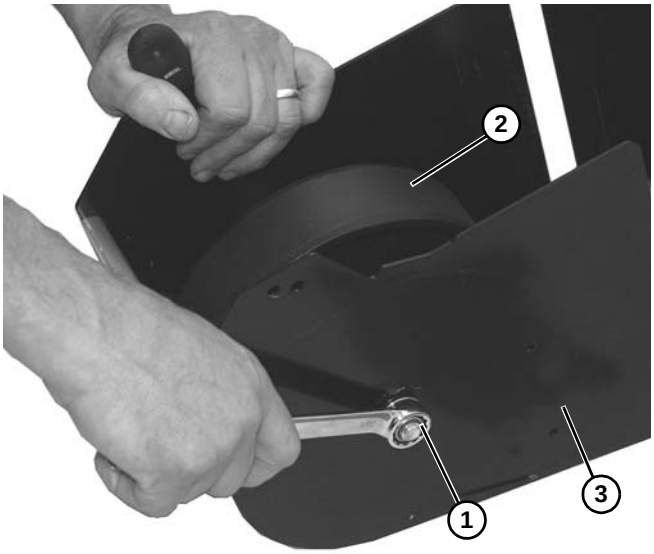

Figure 93

4. Remove bolt **(Figure 94, item 1)**, washer **(Figure 94, item 2)**, two spacers **(Figure 94, item 3)**, and wheel **(Figure 94, item 4)** from take up assembly housing **(Figure 94, item 5)**.

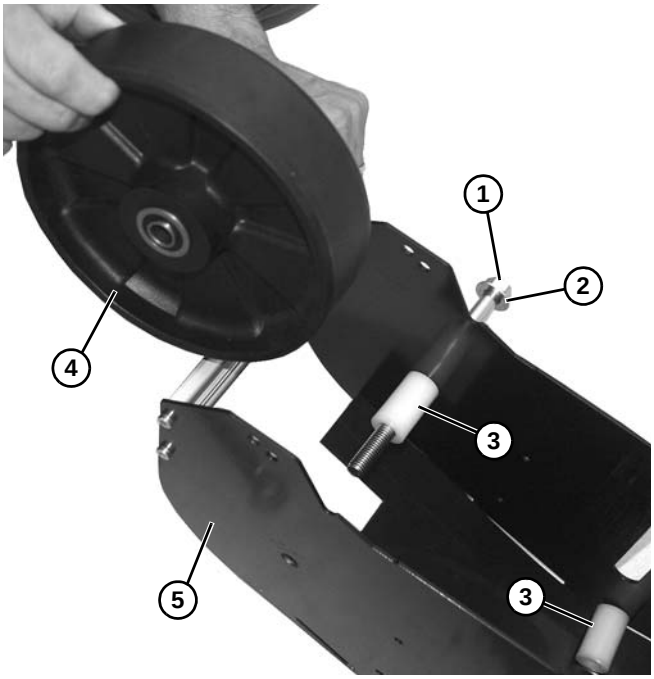

Figure 94

5. Remove idler pulley assembly **(Figure 95, item 1)** from belt **(Figure 95, item 2)**.

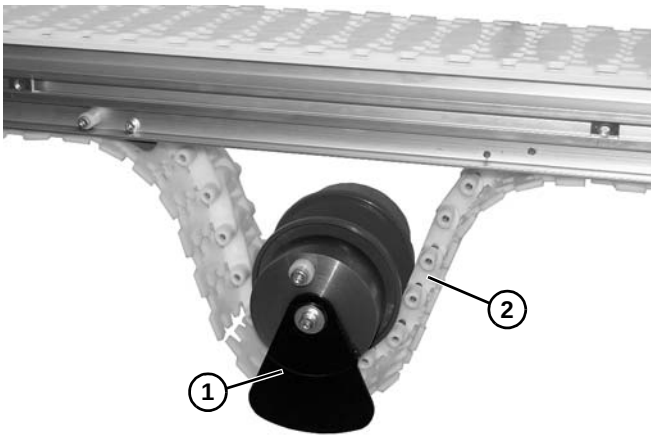

Figure 95

6. Remove socket head screw **(Figure 96, item 1)** from end of idler pulley assembly.

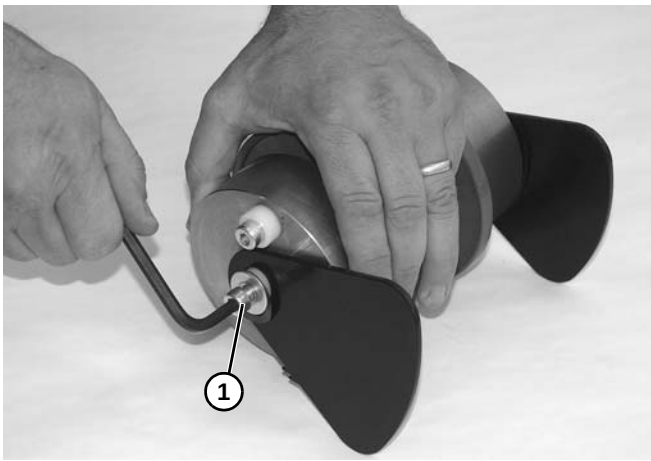

Figure 96

7. Remove bolt **(Figure 97, item 1)**, washer **(Figure 97, item 2)**, spacer **(Figure 97, item 3)**, wave washer **(Figure 97, item 4)**, and plate **(Figure 97, item 5)** from end of idler assembly **(Figure 97, item 6)**.

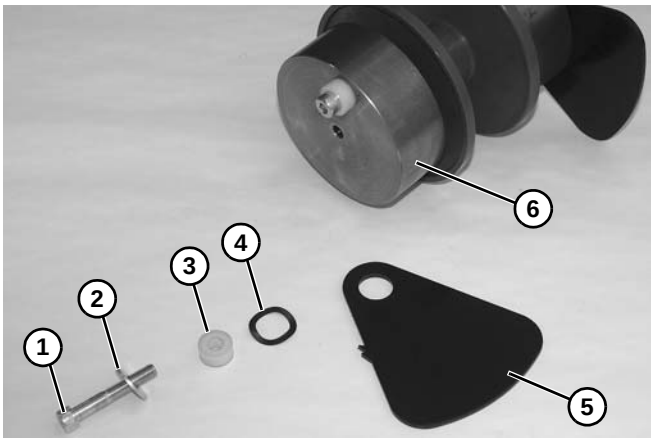

Figure 97

8. Repeat on opposite side.
9. Remove two weights **(Figure 98, item 1)** from each side of pulley **(Figure 98, item 2)**.

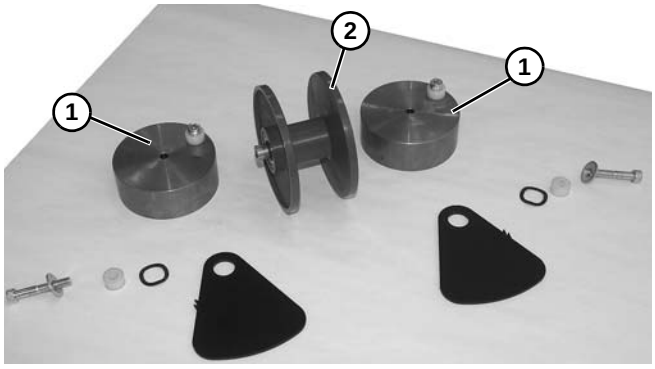

Figure 98

10. Install components reverse of removal, using two hex wrenches **(Figure 99, item 1)** on each side of idler assembly to tighten components.

NOTE
*Be certain that notches **(Figure 99, item 2)** on both plates are on top side, and spacers are in same orientation, as shown, before tightening components.*

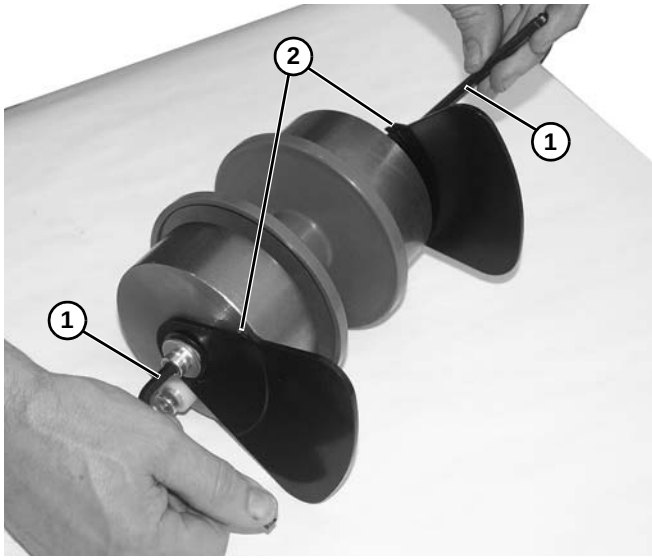

Figure 99

11. Install idler pulley assembly **(Figure 100, item 1)** onto weighted take up assembly **(Figure 100, item 2)**.

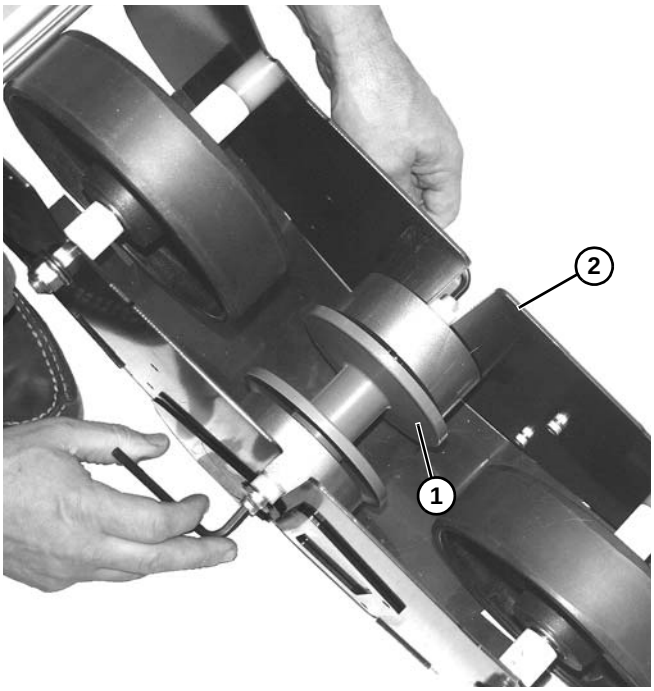

Figure 100

12. Install remaining components reverse of removal.

Power Transfer

Removal

1. Remove two hex head screws **(Figure 101, item 1)** and cover **(Figure 101, item 2)** from power transfer assembly.

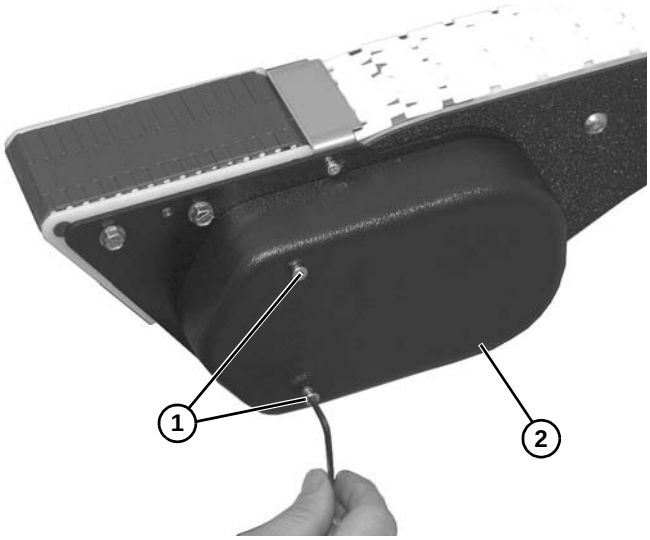

Figure 101

2. Remove power transfer cover **(Figure 102, item 1)** from power transfer assembly **(Figure 102, item 2)**.

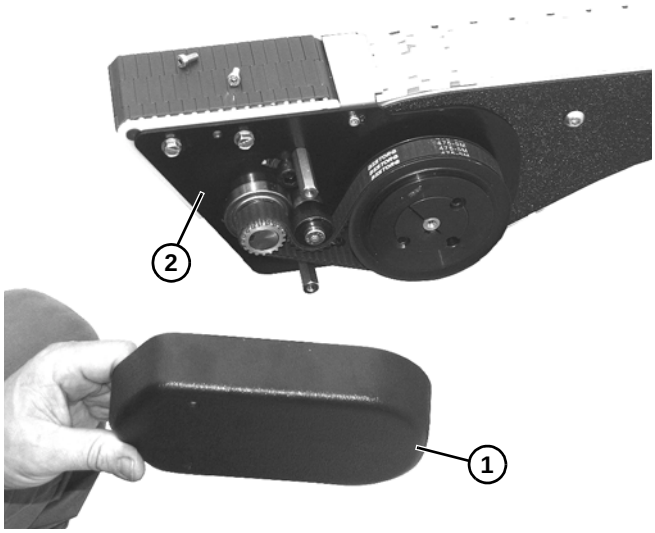

Figure 102

3. Loosen two socket head screws **(Figure 103, item 1)** holding tensioning pulley **(Figure 103, item 2)** onto timing belt **(Figure 103, item 3)**.

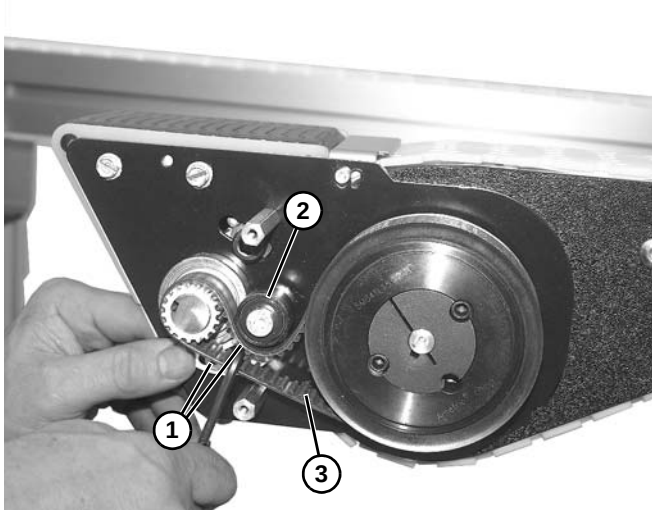

Figure 103

4. Remove timing belt **(Figure 103, item 3)** from assembly.

5. While holding onto nut with a wrench **(Figure 104, item 1)** loosen socket head screw **(Figure 104, item 2)** to loosen tension on belt **(Figure 104, item 3)**.

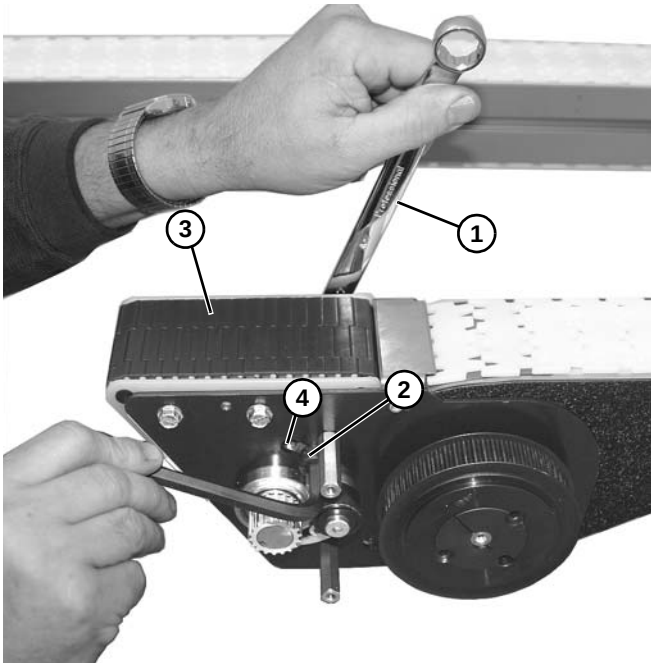

Figure 104

6. Slide assembly within slot **(Figure 104, item 4)** to remove tension on belt.
7. Remove two socket head screws **(Figure 105, item 1)** and tensioner plate **(Figure 105, item 2)**.

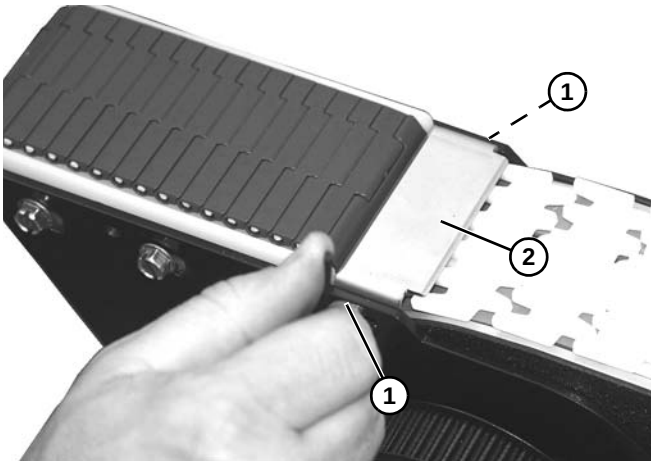

Figure 105

8. Lift slightly on belt **(Figure 106, item 1)** and push pin **(Figure 106, item 2)** out of belt.

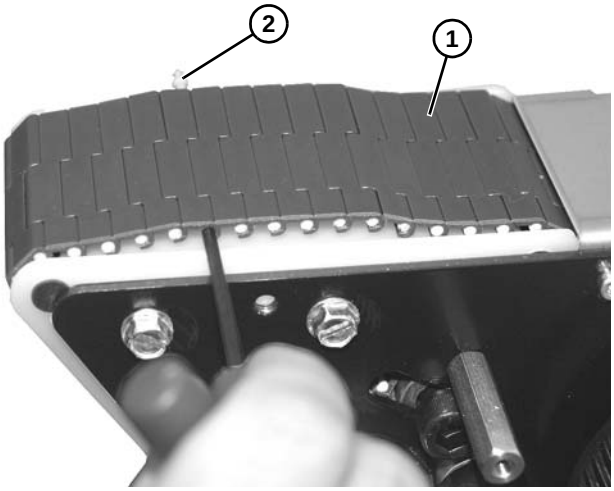

Figure 106

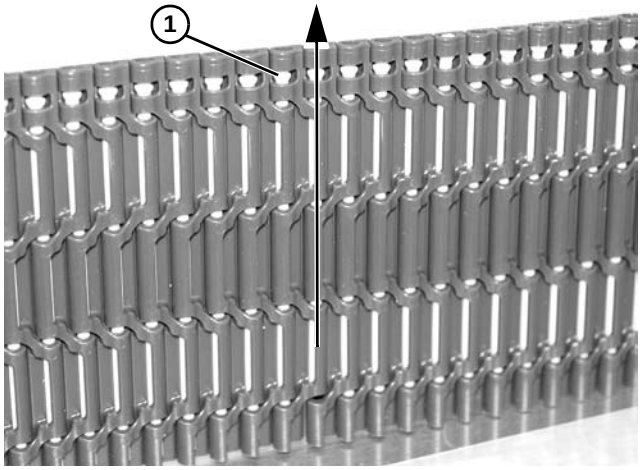

Figure 107

NOTE
*Note that head of pin **(Figure 107, item 1)** should be removed in direction shown.*

9. Remove belt.

10. Remove four bolts **(Figure 108, item 1)** holding wear bar assembly **(Figure 108, item 2)** onto power transfer.

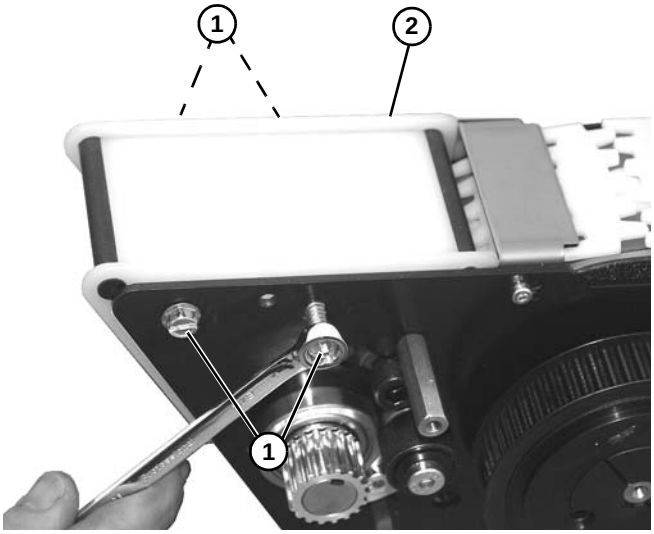

Figure 108

11. Remove wear bar assembly **(Figure 109, item 1)** from power transfer.

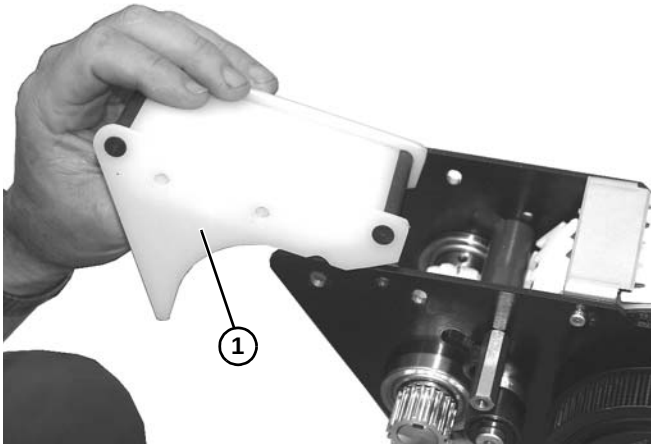

Figure 109

12. Disassemble side guide plates **(Figure 110, item 1)**, wear rods **(Figure 110, item 2)**, and wear bar **(Figure 110, item 3)**. Replace worn components.

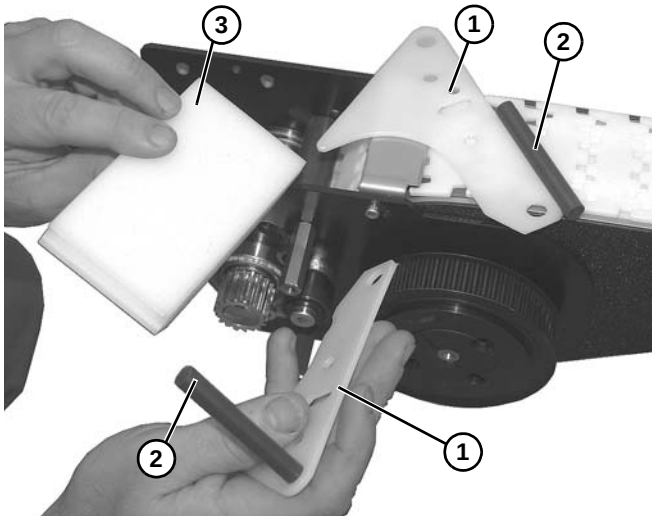

Figure 110

13. Remove nut **(Figure 111, item 1)**, bolt **(Figure 111, item 2)**, and wear tube **(Figure 111, item 3)**.

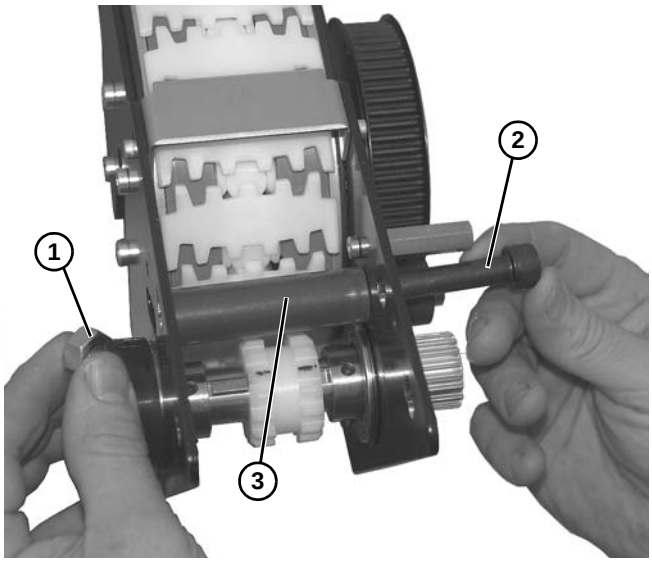

Figure 111

14. Replace wear tube and install bolt and nut to secure.

15. Loosen four set screws **(Figure 112, item 1)** on two bearings **(Figure 112, item 2)**.

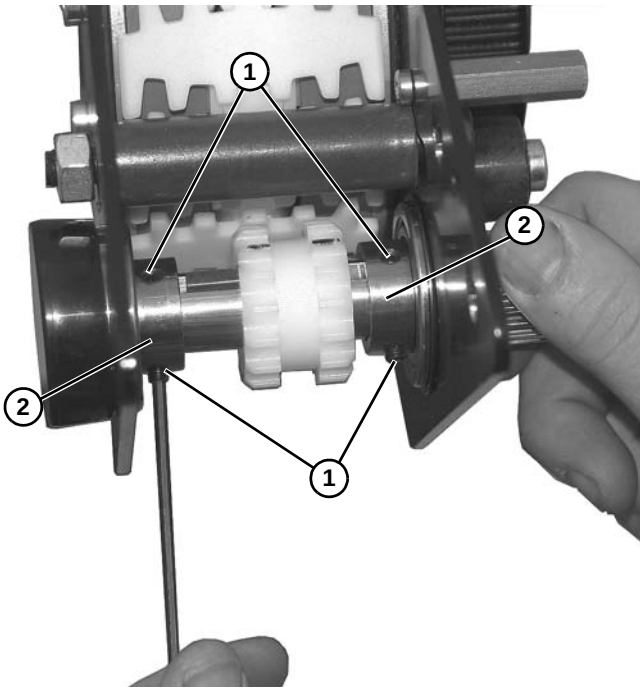

Figure 112

16. Remove drive shaft **(Figure 113, item 1)**, making certain not to loose key **(Figure 113, item 2)** when removing gear **(Figure 113, item 3)**.

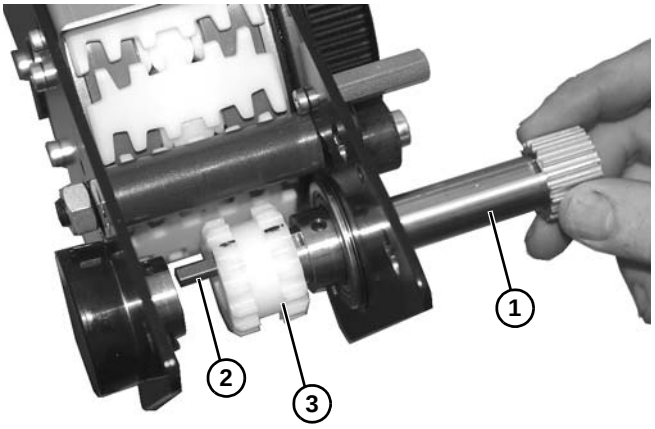

Figure 113

17. Remove key **(Figure 114, item 1)** from gear **(Figure 114, item 2)**.

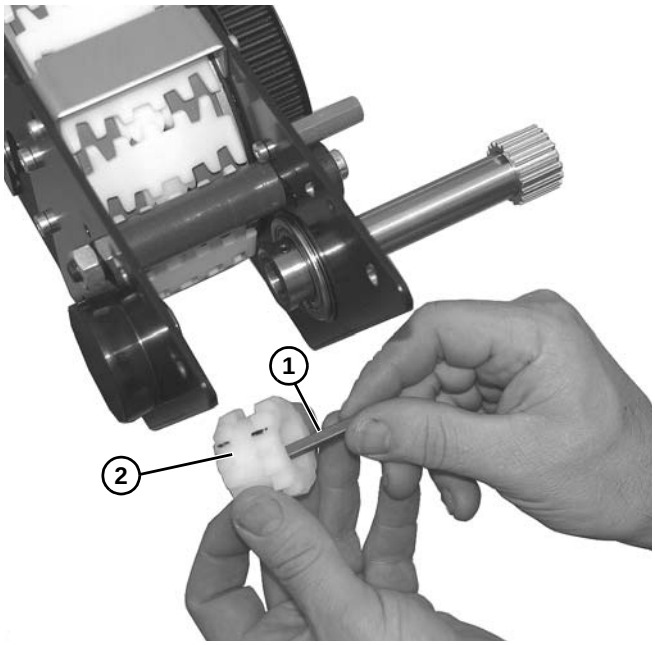

Figure 114

Installation

1. Install drive shaft **(Figure 115, item 1)** on two bearings **(Figure 115, item 2)** and press outward as shown.

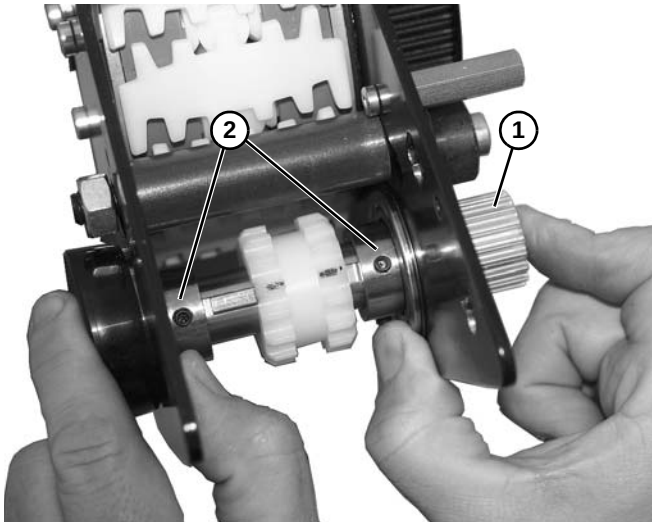

Figure 115

2. Secure drive shaft onto bearings with four set screws **(Figure 116, item 1)**.

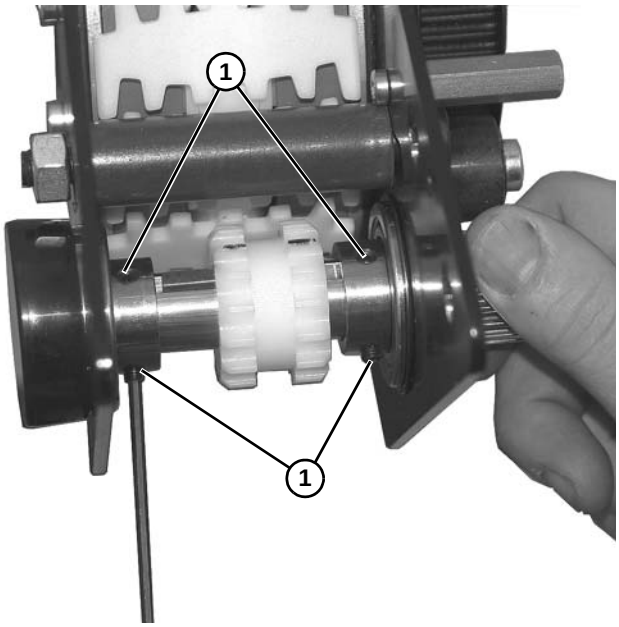

Figure 116

3. Raise belt **(Figure 117, item 1)** into position, and move gear **(Figure 117, item 2)** so that cogs line up with belt, as shown.

Figure 117

4. Install wear bar assembly **(Figure 118, item 1)** with four bolts **(Figure 118, item 2)**.

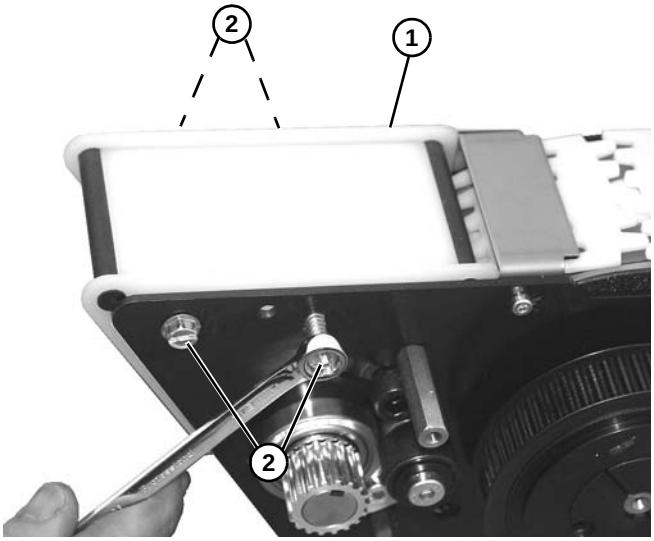

Figure 118

5. Guide belt **(Figure 119, item 1)** through wear bar assembly with belt routing under gear **(Figure 119, item 2)** and over wear tube **(Figure 119, item 3)**.

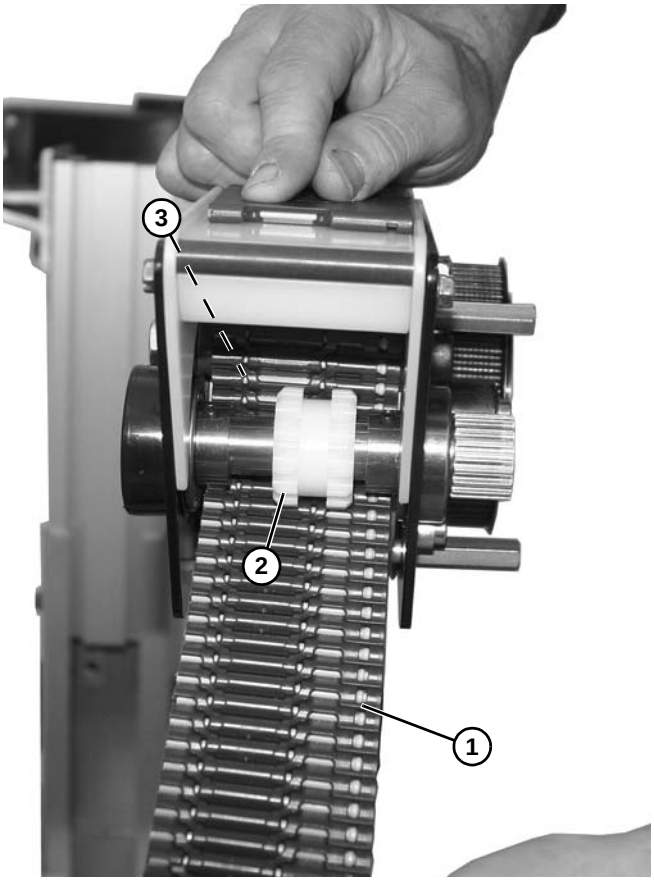

Figure 119

6. Bring ends of belt together and install pin **(Figure 120, item 1)**.

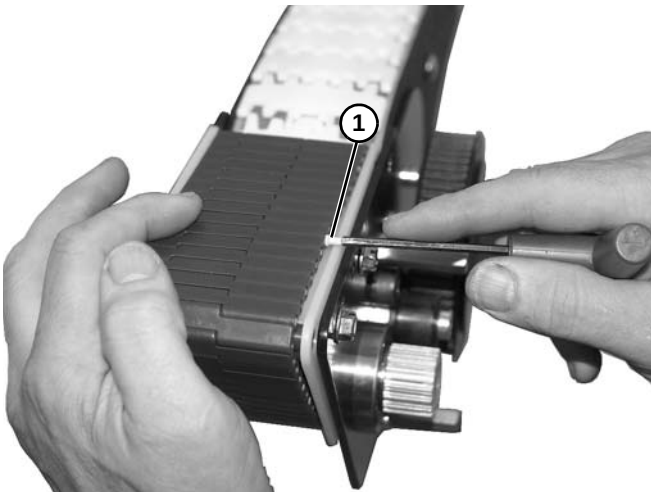

Figure 120

7. Install tensioner plate **(Figure 121, item 1)** with two socket head screws **(Figure 121, item 2)**.

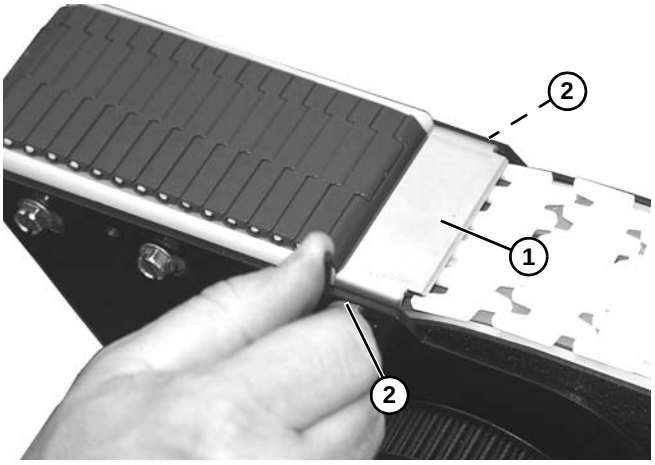

Figure 121

8. While holding onto nut with a wrench **(Figure 122, item 1)**, slide assembly within slot **(Figure 122, item 2)** to remove excess slack from belt **(Figure 122, item 3)**. Tighten hex head screw **(Figure 122, item 4)**.

⚠ CAUTION

DO NOT overtighten belt or excessive wear will occur.

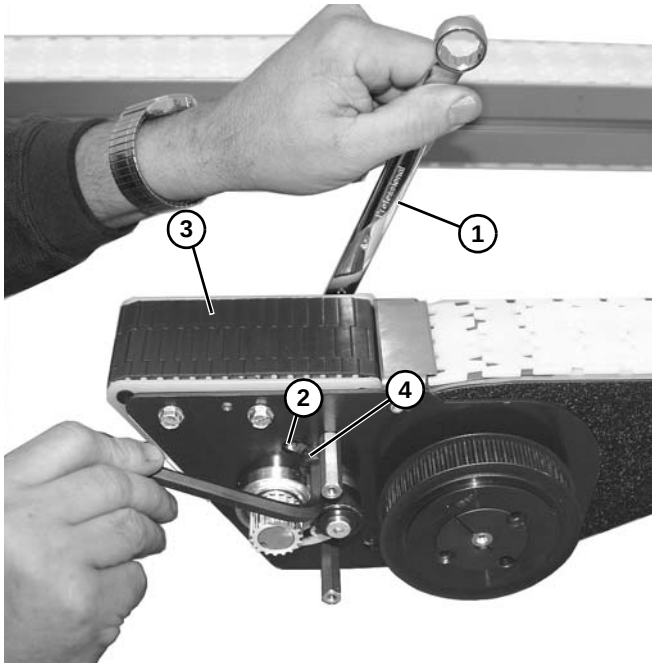

Figure 122

9. Rotate drive shaft **(Figure 123, item 1)** to verify tightness of belt **(Figure 123, item 2)**. Belt should turn freely. Loosen hex head screw **(Figure 123, item 3)** and adjust, if necessary.

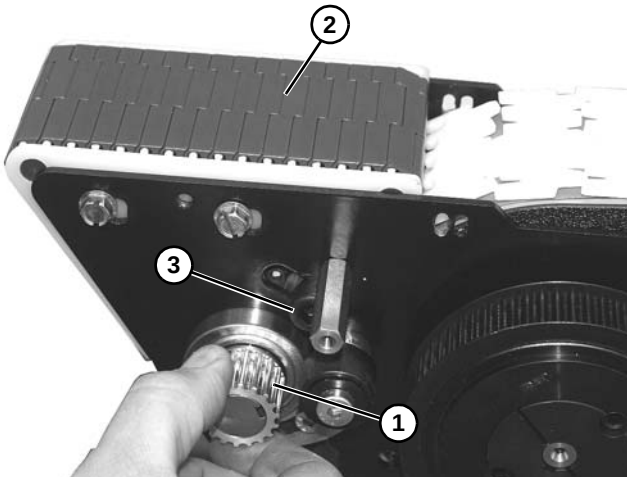

Figure 123

10. Install timing belt:

- On idler end, route and install belt **(Figure 124, item 1)** as shown. Press down on tensioner **(Figure 124, item 2)** and tighten two hex head screws **(Figure 124, item 3)**.

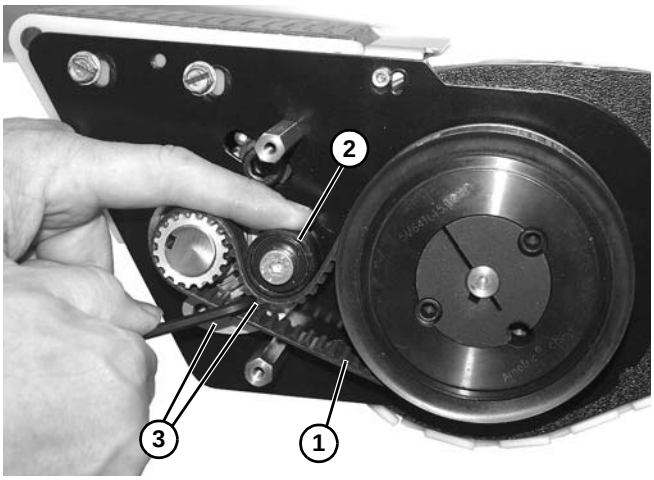

Figure 124

- On drive end, route and install belt **(Figure 125, item 1)** as shown. Press upward on tensioner **(Figure 125, item 2)** and tighten two hex head screws **(Figure 125, item 3)**

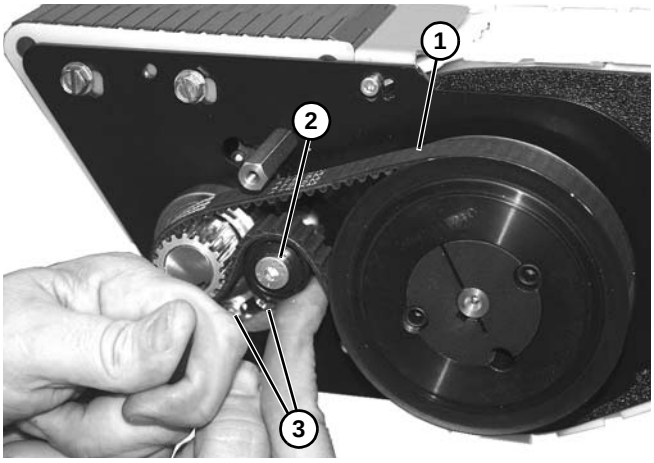

Figure 125

11. Install cover **(Figure 126, item 1)** with two hex head screws **(Figure 126, item 2)**.

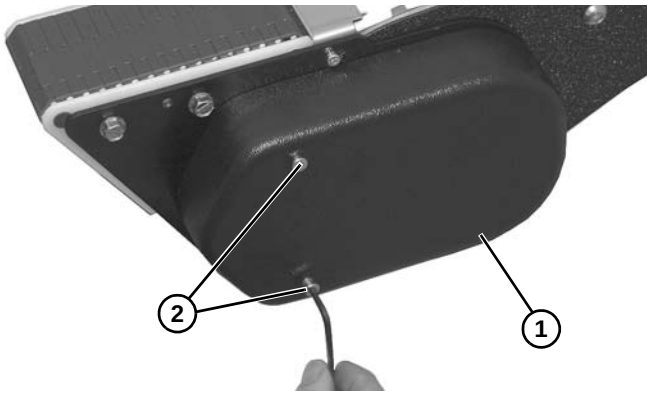

Figure 126

Roller Transfer

1. Remove two hex head screws **(Figure 127, item 1)** on each side of conveyor, and remove roller transfer assembly **(Figure 127, item 2)** from conveyor.

Figure 127

2. Remove two nuts **(Figure 128, item 1)** from one end of roller transfer assembly.

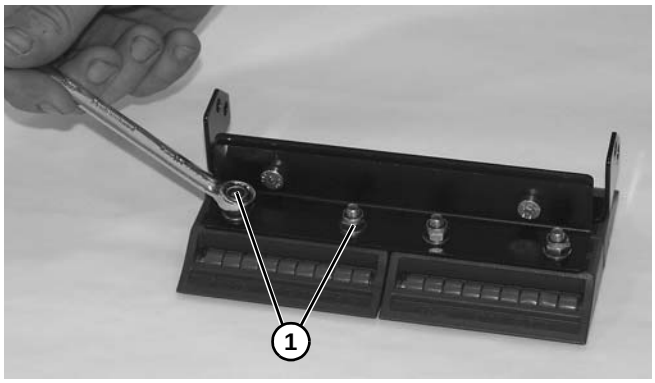

Figure 128

3. Remove nuts **(Figure 129, item 1)**, washers **(Figure 129, item 2)**, and roller transfer **(Figure 129, item 3)** from frame **(Figure 129, item 4)**.

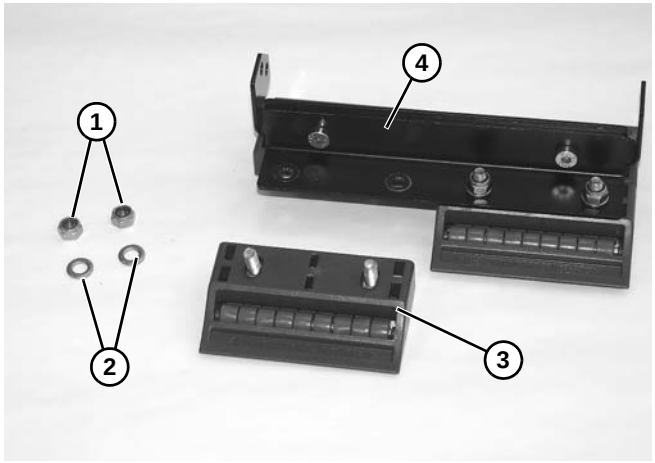

Figure 129

Notes

Service Parts

NOTE
For replacement parts other than those shown in this section, contact an authorized Dorner Service Center or the factory. Key Service Parts and Kits are identified by the Performance Parts Kits logo. Dorner recommends keeping these parts on hand.

Drive Tail

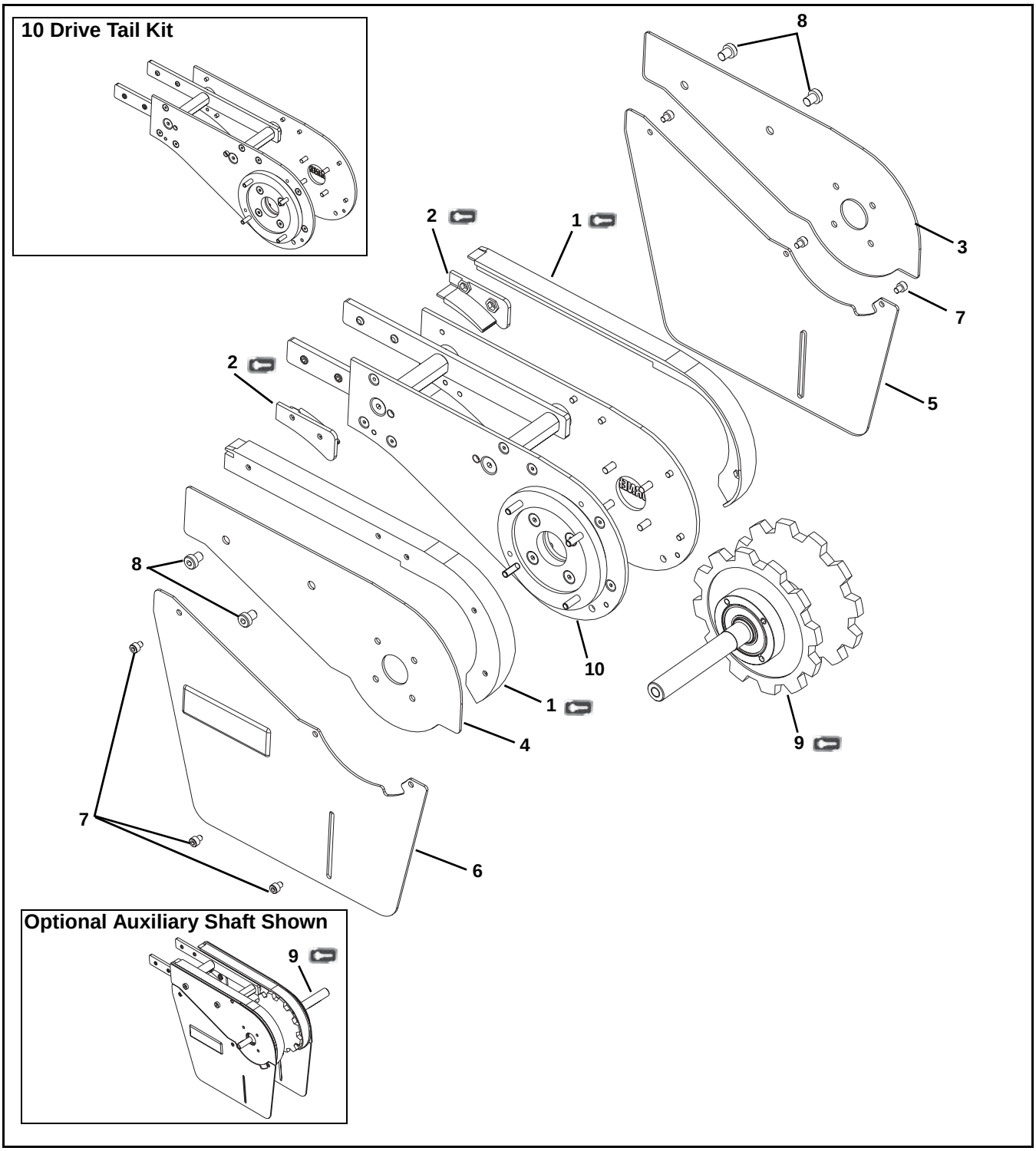

Item	Part Number	Description
1	834-120	Retaining Guide Set for 65 width Conveyor
	834-149	Retaining Guide Set for 105 & 150 width Conveyors
2	834-124	Belt Capture Guide Set for 65 width Conveyors
	834-151	Belt Capture Guide Set for 105 & 150 width Conveyors
3	202995-WWWLH	Drive Plate Guard - Left Hand
4	202995-WWWRH	Drive Plate Guard - Right Hand
5	203365-LH	Bottom Drive Guard - Left Hand
6	203365-RH	Bottom Drive Guard - Right Hand
7	910506M	Button Head Screw, M5-0.80 x 6 mm
8	920812M	Button Head Cap Screw, M8-1.25 x 12 mm
9	204170-WWW	Spindle Shaft Assembly
	203170-WWW	CE Spindle Shaft Assembly
	204071-WWW	Spindle Shaft Assembly with Auxiliary Shaft
	203171-WWW	CE Spindle Shaft Assembly with Auxiliary Shaft
10	204072-WWW	Drive Tail Kit
	204073-WWW	CE Drive Tail Kit
	207079-WWW	Drive Tail with Auxiliary Shaft Kit
	204080-WWW	CE Drive Tail with Auxiliary Shaft Kit
WWW= Conveyor width reference: 065, 105, 150		

Service Parts

Weighted Take-Up

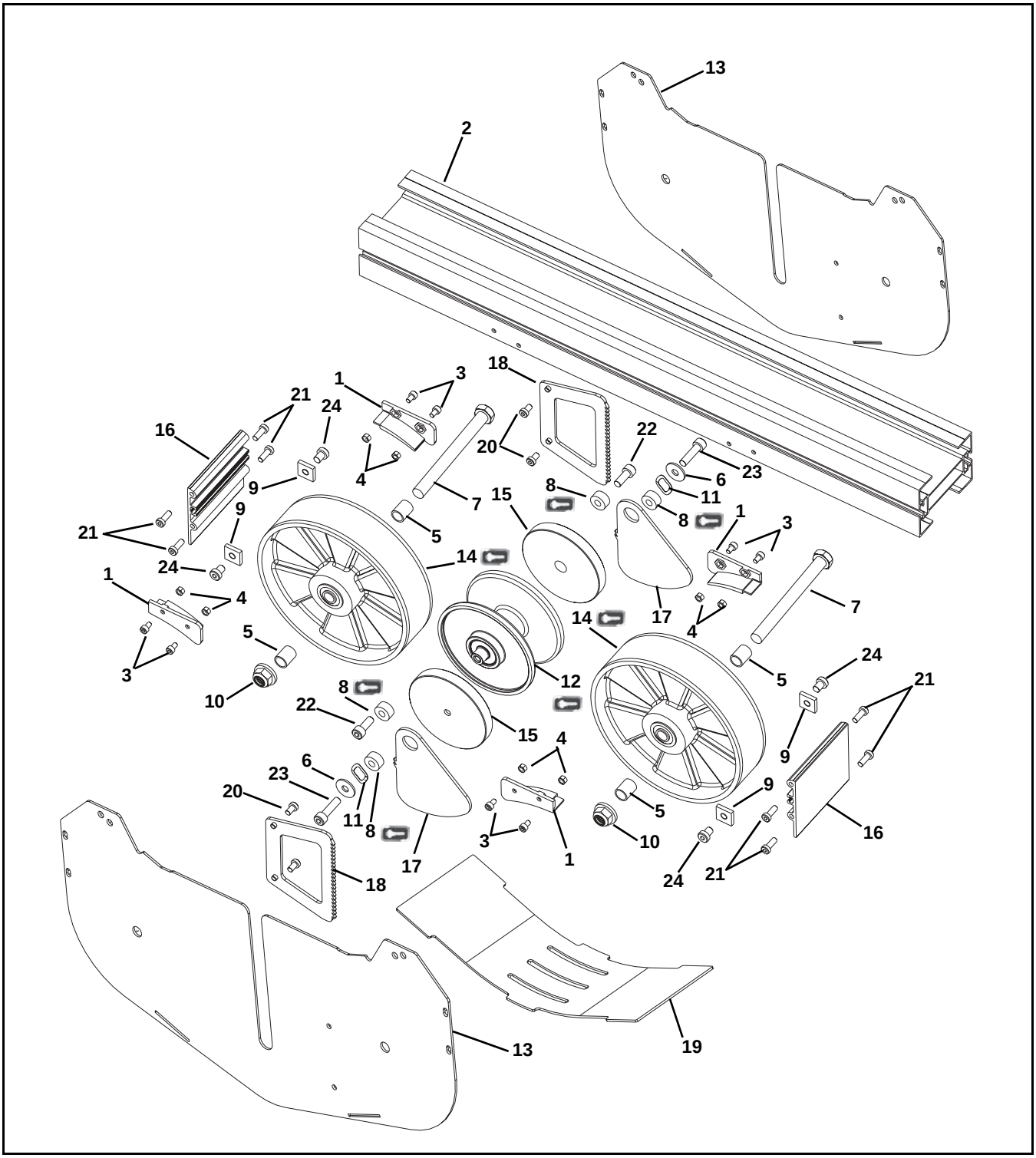

Item	Part Number	Description
1	834-124	Belt Capture Guide Set, for 65 width Conveyors
	834-151	Belt Capture Guide Set, for 105 & 150 width Conveyors
2	203345-WWW-LLL	Conveyor Section
3	920508M	Socket Head Screw, M5-.80 x 8 mm
4	990501M	Hex Nut, M5-0.80
5	203455	Bushing, 0.50" x 0.75" for 105 width Conveyors
	203456	Bushing 0.50" x 1.125" for 150 width Conveyors
6	807-1760	Washer
7	807-2290	Hex Bolt, 1/2-13 x 3.5" for 65 width Conveyors
	807-2291	Hex Bolt, 1/2-13 x 5" for 105 width Conveyors
	807-2292	Hex Bolt, 1/2-13 x 7" for 150 width Conveyors
8	807-2297	Nylon Spacer, 0.75" x 0.32" x 0.375"
9	834-014	Slide Nut
10	910-320	Lock Nut
11	807-2314	Spring Washer
12	201716	Idler Pulley Assembly for 65 width Conveyors
	201756	Idler Pulley Assembly for 105 & 150 width Conveyors
13	203330	Weighted Take-Up Plate
14	203331	Wheel
15	203343	Weighted Take-Up Disk for 65 & 105 width Conveyors
	203363	Weighted Take-Up Disk for 150 width Conveyors
16	203344-WWW	End Guard
17	203349	Latching Cover
18	203351	Ratchet Plate
19	203457-WWW	Bottom Guard
20	920691M	Low Head Cap Screw, M6-1.00 x 10 mm
21	920693M	Low Head Cap Screw, M6-1.00 x 16 mm
22	920820M	Socket Head Cap Screw, M8-125 x 20 mm
23	920830M	Socket Head Cap Screw, M8-125 x 30 mm for 65 & 105 width Conveyors
	920850M	Socket Head Cap Screw, M8-125 x 50 mm for 150 width Conveyors
24	920891M	Low Head Cap Screw, M8-1.25 x 10 mm
WWW= Conveyor width reference: 065, 105, 150		
LLL= Conveyor frame section in inches: 029, 035, 047, 059		
Length Example: Length = 29" LLL = 029		

Service Parts

Weighted Take-Up Drive Tail

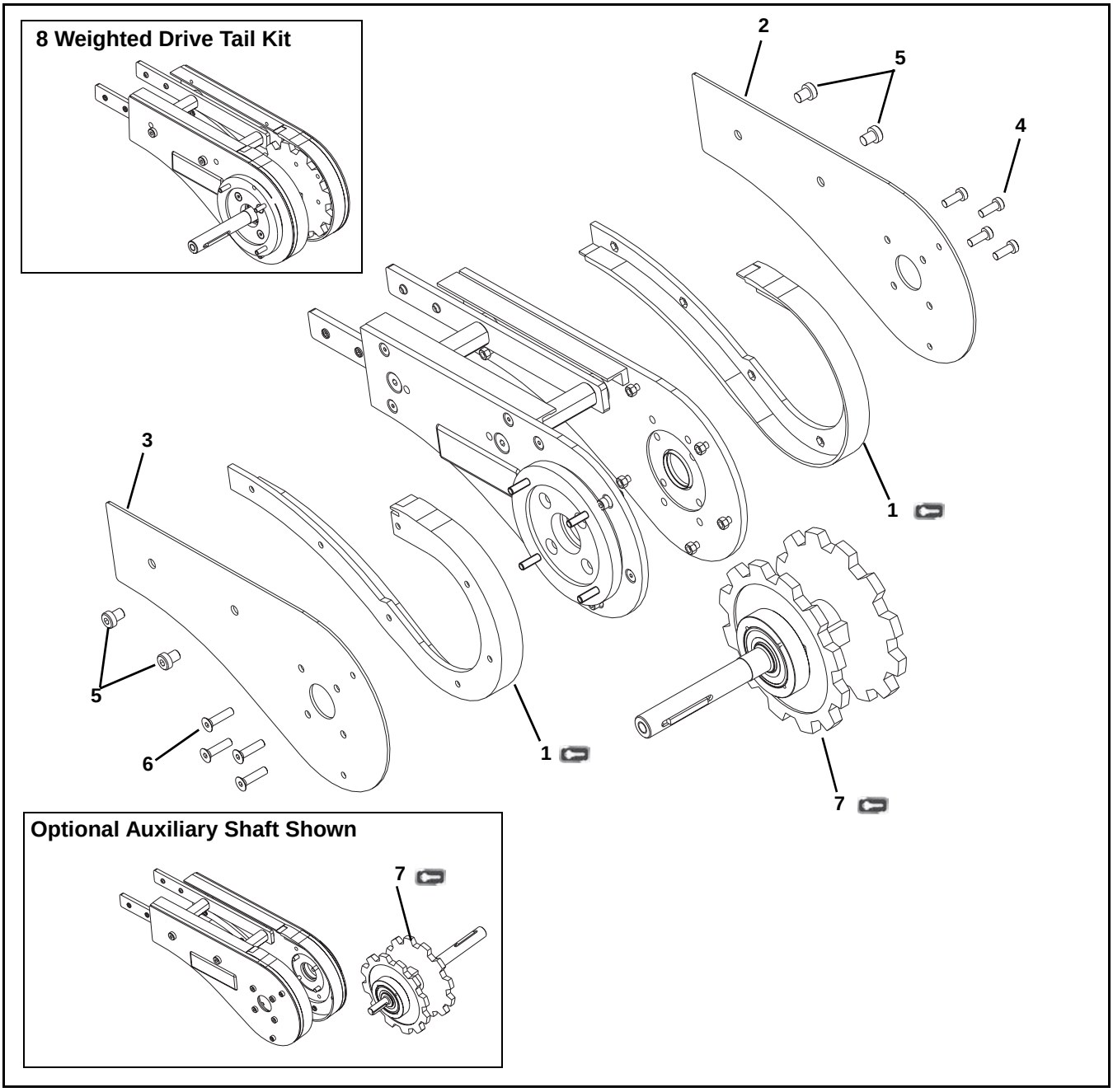

Item	Part Number	Description
1	834-130	Retaining Guide Set for 65 width Conveyors
	834-157	Retaining Guide Set for 105 & 150 width Conveyors
2	202997-WWWLH	Drive Plate Guard - Left Hand
3	202997-WWWRH	Drive Plate Guard - Right Hand
4	920694M	Button Head Cap Screw, M6-1.00 x 16 mm
5	910812M	Button Head Cap Screw, M8-1.25 x 12 mm
6	930625M	Flat Head Screw, M6-1.00 x 25 mm

Item	Part Number	Description
7	203168-WWW	Spindle Shaft Assembly
	203184-WWW	CE Spindle Shaft Assembly
	203183-WWW	Spindle Shaft Assembly with Auxiliary Shaft
	203185-WWW	CE Spindle Shaft Assembly with Auxiliary Shaft
8	204083-WWW	Drive Tail Kit
	204085-WWW	CE Drive Tail Kit
	207084-WWW	Drive Tail with Auxiliary Shaft Kit
	204086-WWW	CE Drive Tail with Auxiliary Shaft Kit
WWW= Conveyor width reference: 065, 105, 150		

Idler Tail

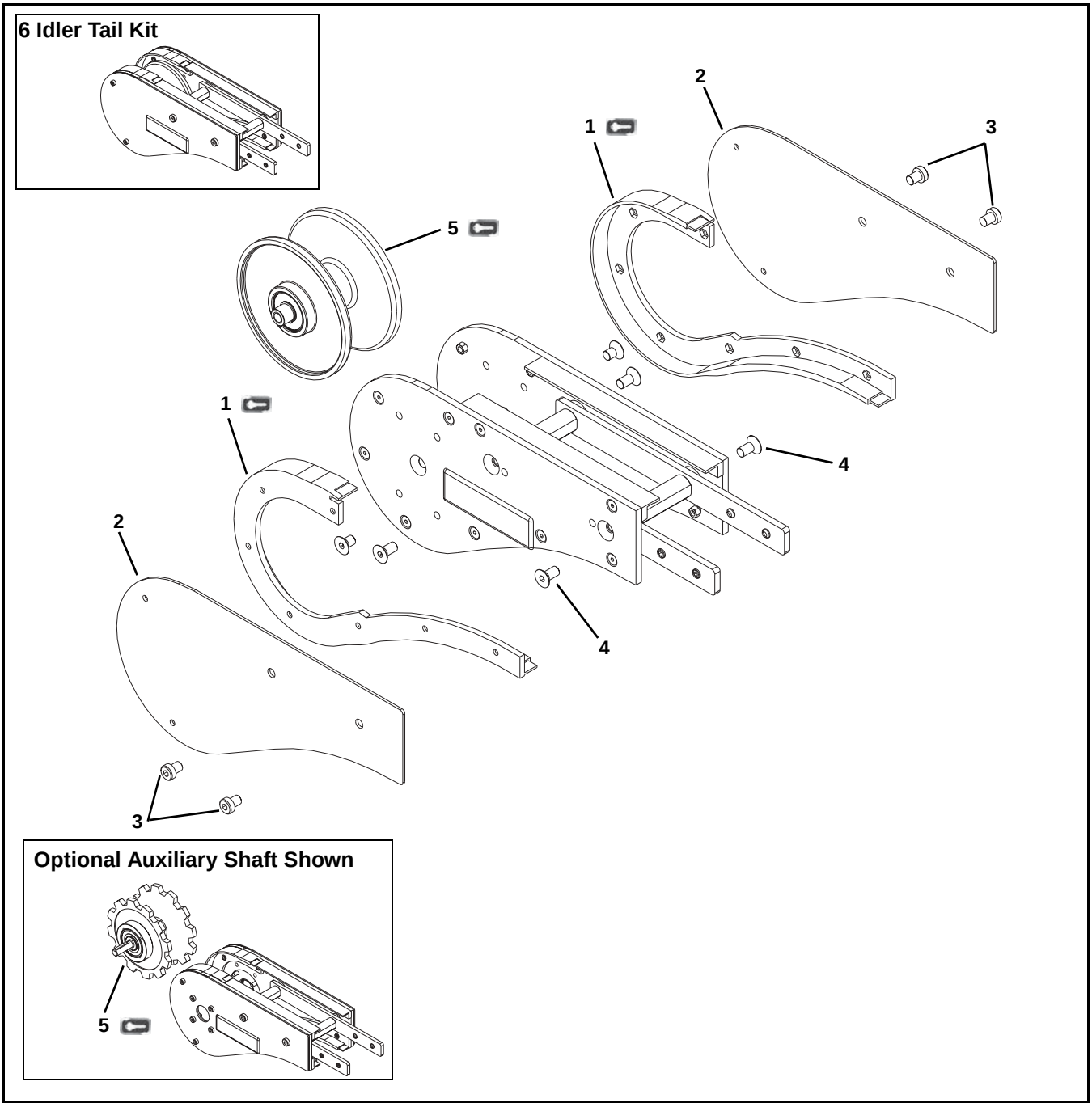

Item	Part Number	Description
1	834-130	Retaining Guide Left Hand for 65 width Conveyors
	834-157	Retaining Guide Left Hand for 105 & 150 width Conveyors
2	202997-WWWLH	Drive Plate Guard - Left Hand
	202997-WWWRH	Drive Plate Guard - Right Hand
3	910812M	Button Head Cap Screw, M8-1.00 x 12 mm
4	920891M	Flat Head Cap Screw, M8-1.25 x 10 mm

Item	Part Number	Description
5	201716	Idler Pulley Assembly for 65 width Conveyors
	201756	Idler Pulley Assembly for 105 & 150 width Conveyors
	203169-WWW	Idler Pulley Assembly with Auxiliary Shaft
6	202996-WWW	Idler Tail Kit
	204082-WWW	Idler Tail with Auxiliary Shaft Kit
WWW= Conveyor width reference: 065, 105, 150		

Service Parts

Top Running Drive

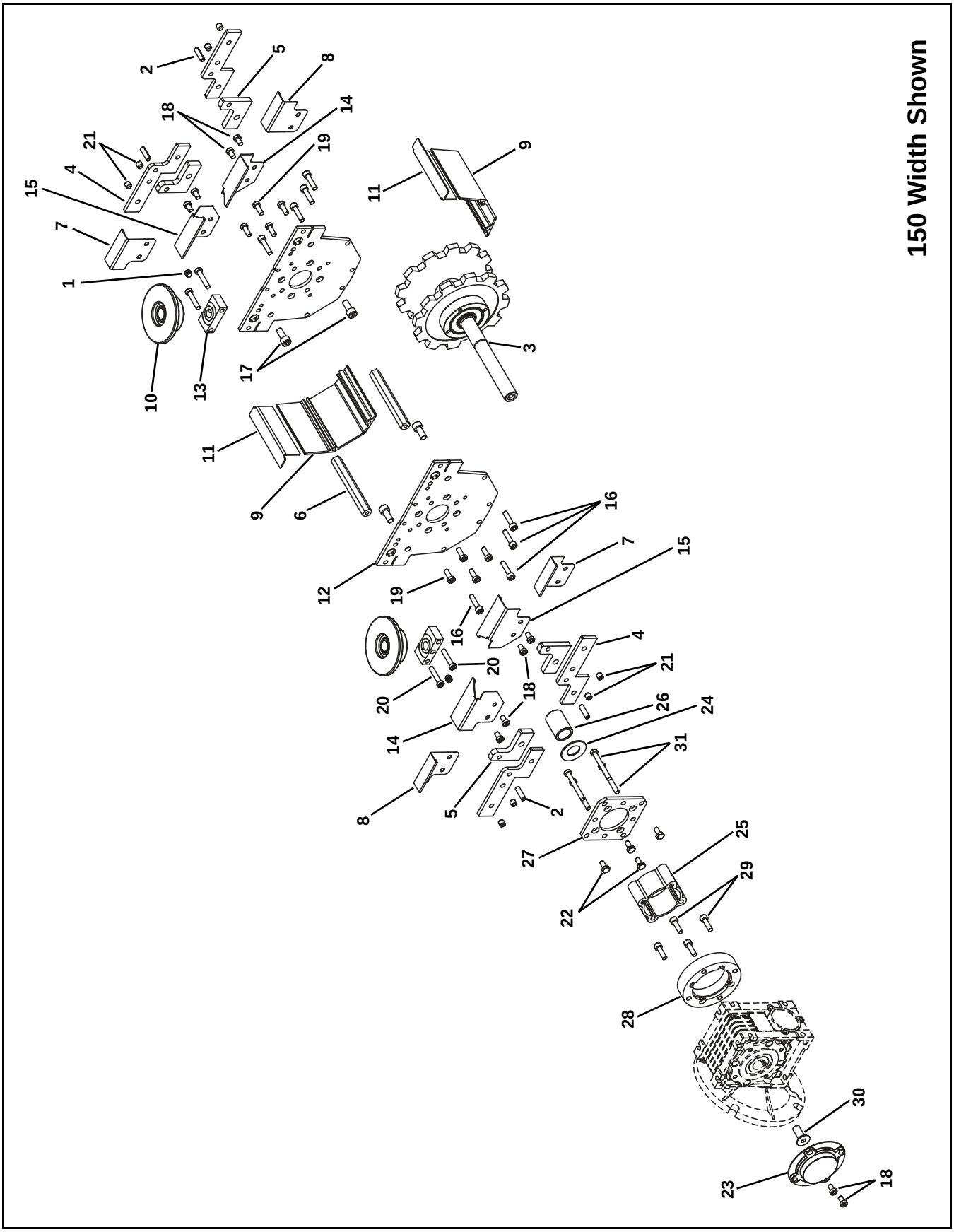

Item	Part Number	Description
1	807-2555	Set Screw, M8-1.25 x 10 mm
2	913-051	Pin for 065 width Conveyors
	913-509	Pin for 150 width Conveyors
3	203168-WWW	Spindle Assembly
4	205140	Connecting Bar for 065 width Conveyors
	205142	Connecting Bar for 105 width Conveyors
	204290	Connecting Bar for 150 width Conveyors
5	205141	Spacing Bar for 065 width Conveyors Only
	204291	Spacing Bar for 150 width Conveyors Only
6	205147	Hex Post for 065 width Conveyors
	205116	Hex Post for 105 width Conveyors
	204292	Hex Post for 150 width Conveyors
7	204293-LH	Wear Strip Support Left Hand for 150 width Conveyors Only
8	204293-RH	Wear Strip Support Right Hand for 150 width Conveyors Only
9	205125	Extrusion Guard for 065 width Conveyors
	204380	Extrusion Guard for 105 & 150 width Conveyors
10	204379	Hold Down Assembly for 065 width Conveyors
	204381	Hold Down Assembly for 105 & 150 width Conveyors
11	204790	Pinch Guard for 065 width Conveyors
	204791	Pinch Guard for 105 & 150 width Conveyors
12	205115	Side Plate
13	205134	Wheel Block
14	205139-LH	Wear Strip Support Left Hand for 065 width Conveyors
	205137-LH	Wear Strip Support Left Hand for 105 & 150 width Conveyors
15	205139-RH	Wear Strip Support Right Hand for 065 width Conveyors
	205137-RH	Wear Strip Support Right Hand for 105 & 150 width Conveyors
16	708180P	Trilobe Screw, M6-1.00 x 25 mm
17	920818M	Socket Head Screw, M8-1.25 x 18 mm for 150 width Conveyors Only
18	950610M	Low Head Cap Screw, M6-1.00 x 10 mm
19	950616M	Low Head Cap Screw, M6-1.00 x 16 mm
20	950630M	Low Head Cap Screw, M6-1.00 x 30 mm
21	970808M	Set Screw, M8-1.25 x 10 mm
22	960612MSS	Hex Head Cap Screw, M6-1.00 x 12 mm
23	807-2016	Cover
24	807-2277	Disc Spring

Item	Part Number	Description
25	202270-00134	Extrusion for 065 & 105 width Conveyors
	202270-00223	Extrusion for 150 width Conveyors
26	203065	Drive Spacer
27	205132	Motor Mount
28	350115	Adapter Ring
29	920620M	Socket Head Screw, M6-1.00 x 20 mm
30	931025M	Flat Head Screw, M10-.50 x 25 mm
31	950650M	Low Head Cap Screw, M6-1.00 x 50 mm
WWW= Conveyor width reference: 065, 105, 150		

Service Parts

Frame Assembly

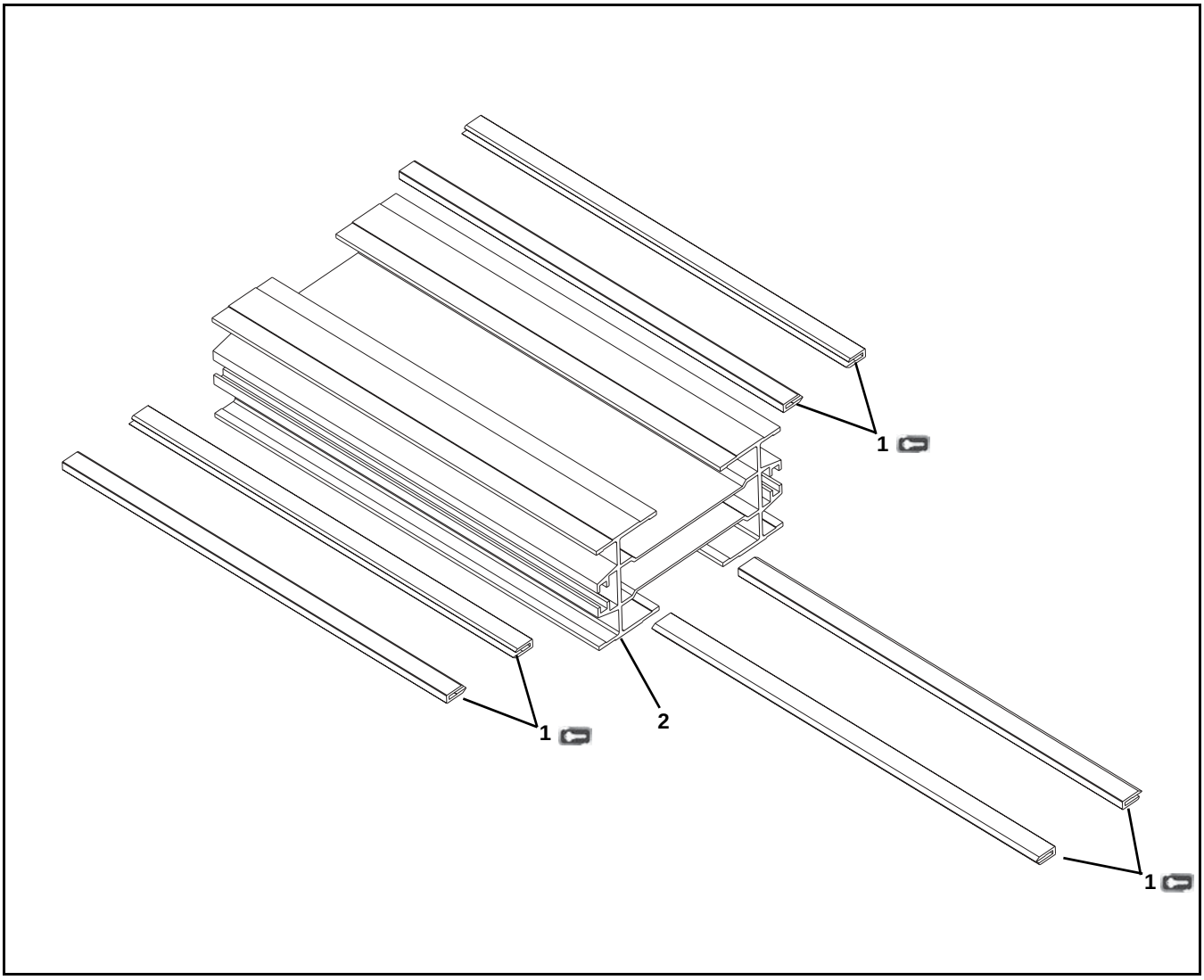

Item	Part Number	Description
1	834-001-LLLLL	Wear Strips
2	834-021-LLLLL	Frame for 65 width Conveyors
	834-041-LLLLL	Frame for 105 width Conveyors
	834-061-LLLLL	Frame for 150 width Conveyors
LLLLL = Part length in inches with two decimal places.		
Length Example: Length = 95.25" LLLLL = 09525		

Wear Strip Replacement Tool

Item	Part Number	Description
1	203475	Wear Strip Replacement Tool Kit
2	834-003	Nylon Set Screws, M5 x 6 mm
3	896-1008	Drill Bit, #18, 0.1695"

65 Width Curve Frame Assembly

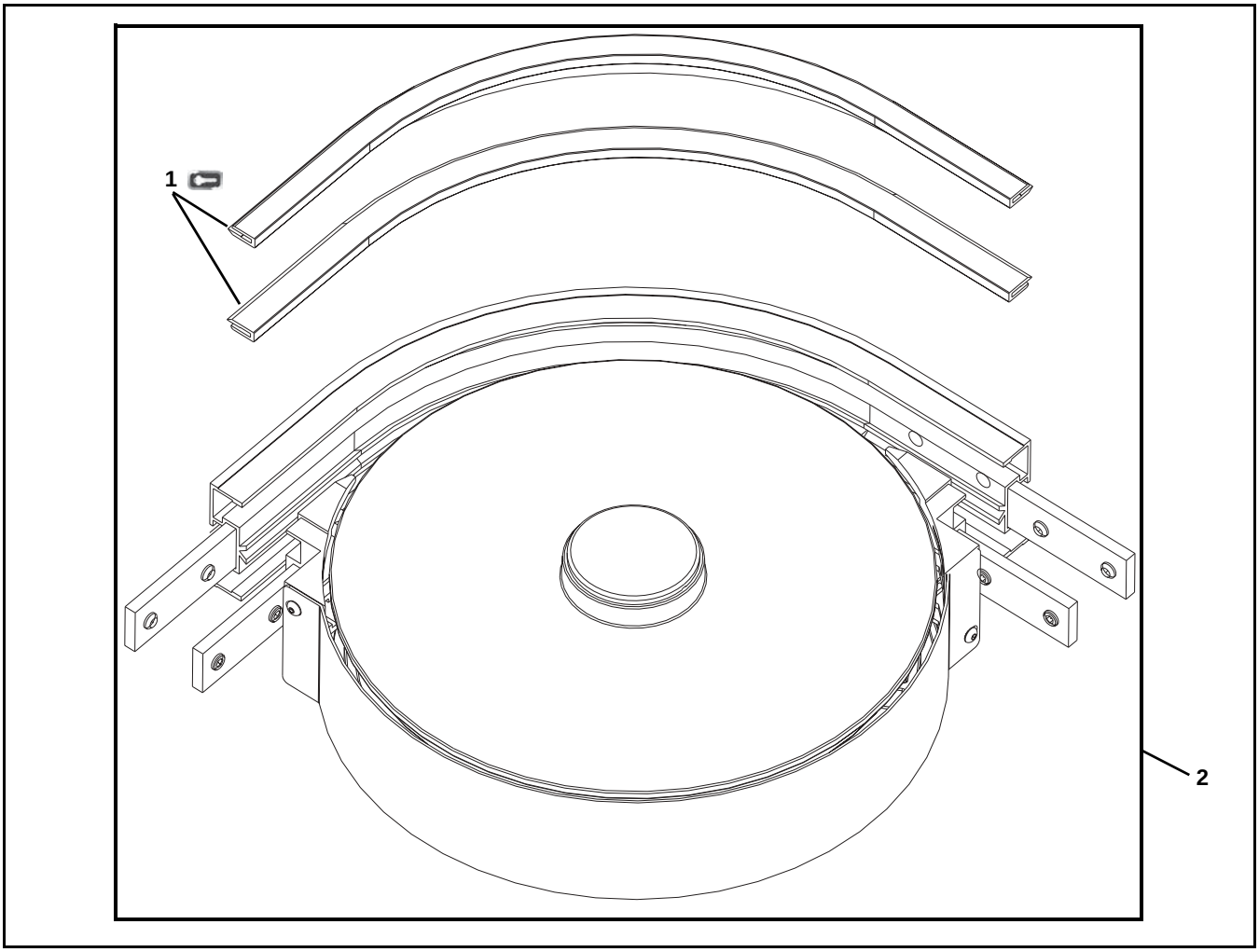

Item	Part Number	Description
1	834-001-LLLLL	Wear Strips
2	203458-045	45° Wheel Curve Kit
	203458-090	90° Wheel Curve Kit
	203458-180	180° Wheel Curve Kit
	834-034	90° 500 Radius Plain Bend Curve Kit
	834-035	90° 700 Radius Plain Bend Curve Kit
3	205165-065	Guard Assembly for Top Running Drive Only (Not Shown)
LLLLL = Part length in inches with two decimal places.		
Length Example: Length = 95.25" LLLLL = 09525		

105 Width Curve Frame Assembly

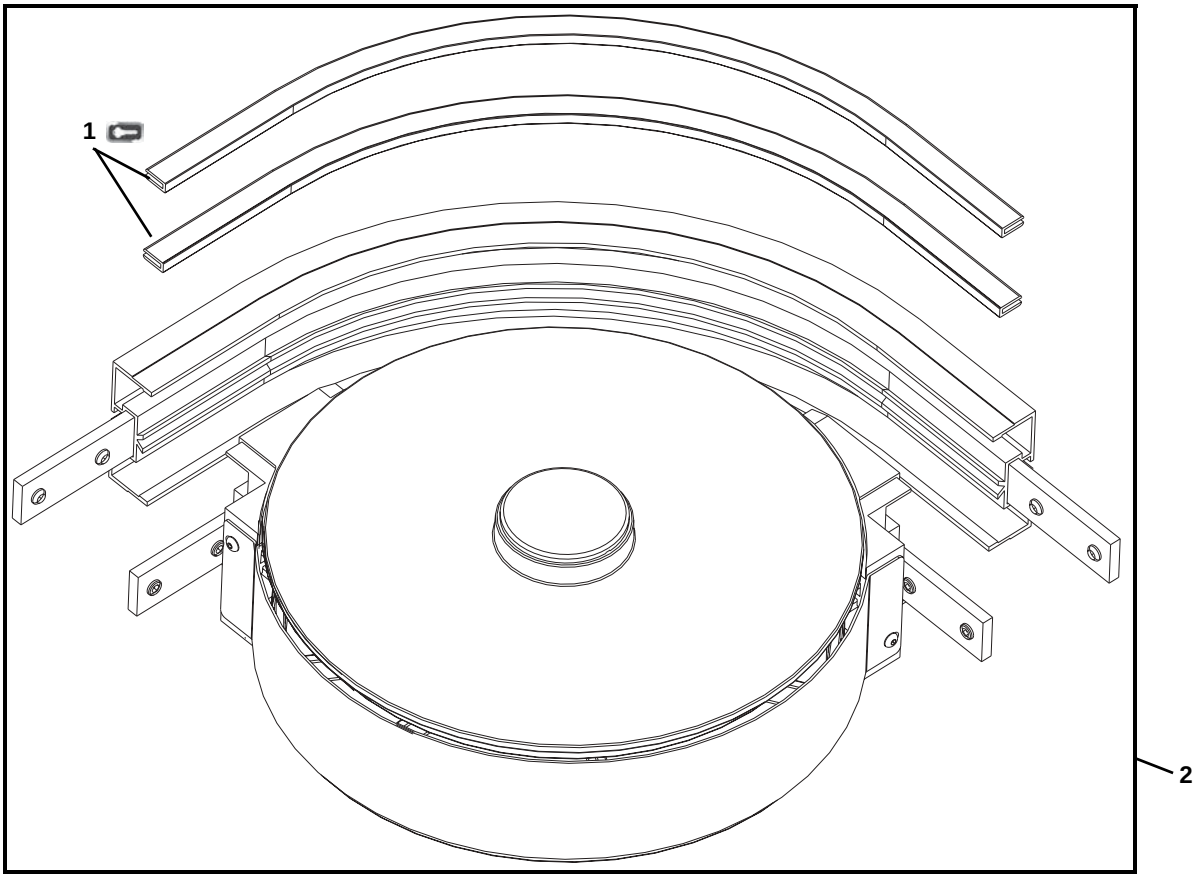

Item	Part Number	Description
1	834-001-LLLLL	Wear Strips
2	203459-045	45° Wheel Curve Kit
	203459-090	90° Wheel Curve Kit
	203459-135	135° Wheel Curve Kit
	203459-180	180° Wheel Curve Kit
	834-054	90° 500 Radius Plain Bend Curve Kit
	834-055	90° 700 Radius Plain Bend Curve Kit
3	205165-105	Guard Assembly for Top Running Drive Only (Not Shown)
LLLLL = Part length in inches with two decimal places.		
Length Example: Length = 95.25" LLLLL = 09525		

150 Width Curve Frame Assembly

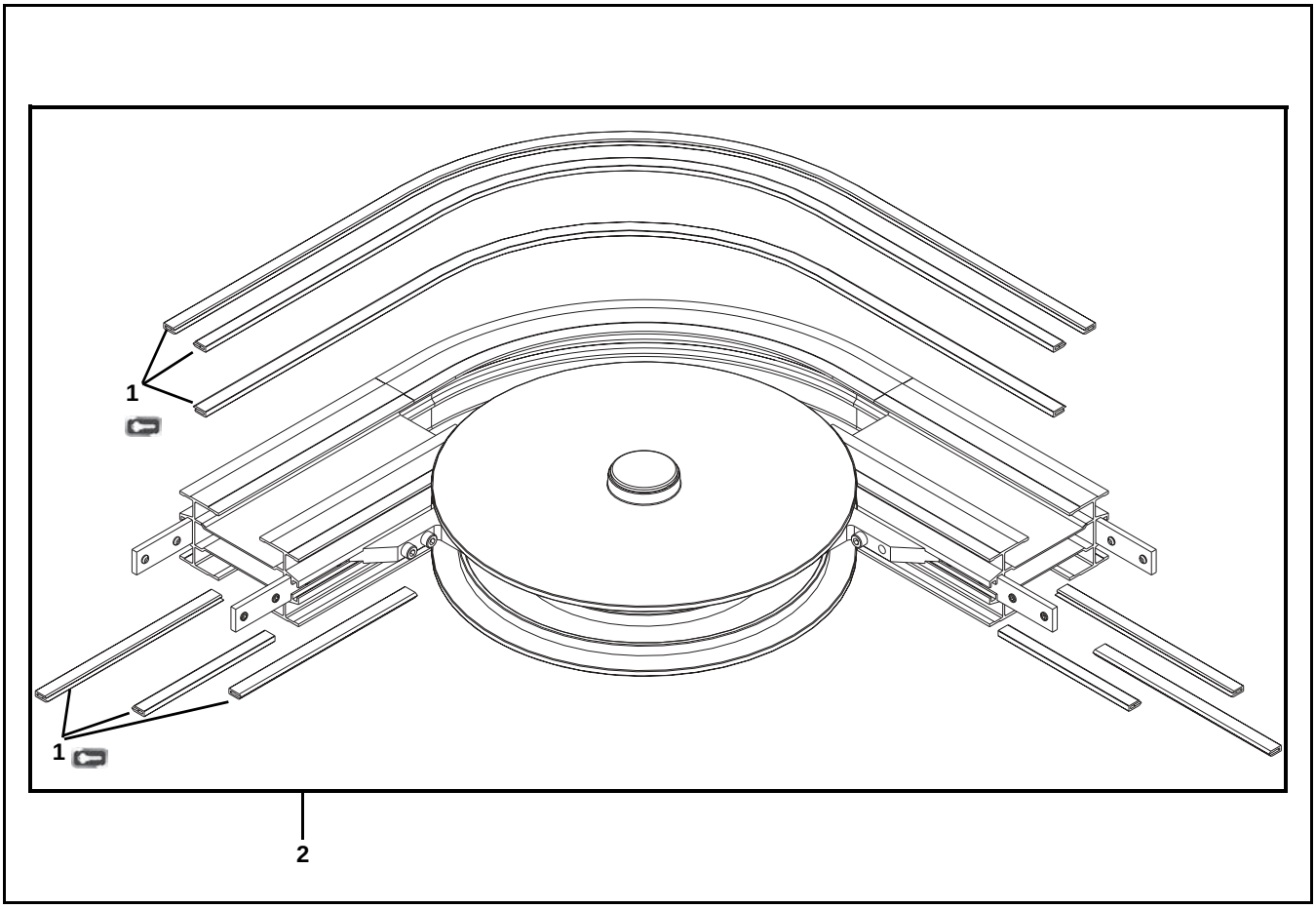

Item	Part Number	Description
1	834-001-LLLLL	Wear Strips
2	203460-045	45° Wheel Curve Kit
	203460-090	90° Wheel Curve Kit
	203460-180	180° Wheel Curve Kit
3	205165-150	Guard Assembly for Top Running Drive Only (Not Shown)
LLLLL = Part length in inches with two decimal places.		
Length Example: Length = 95.25" LLLLL = 09525		

65 Width Knuckle Frame Assembly

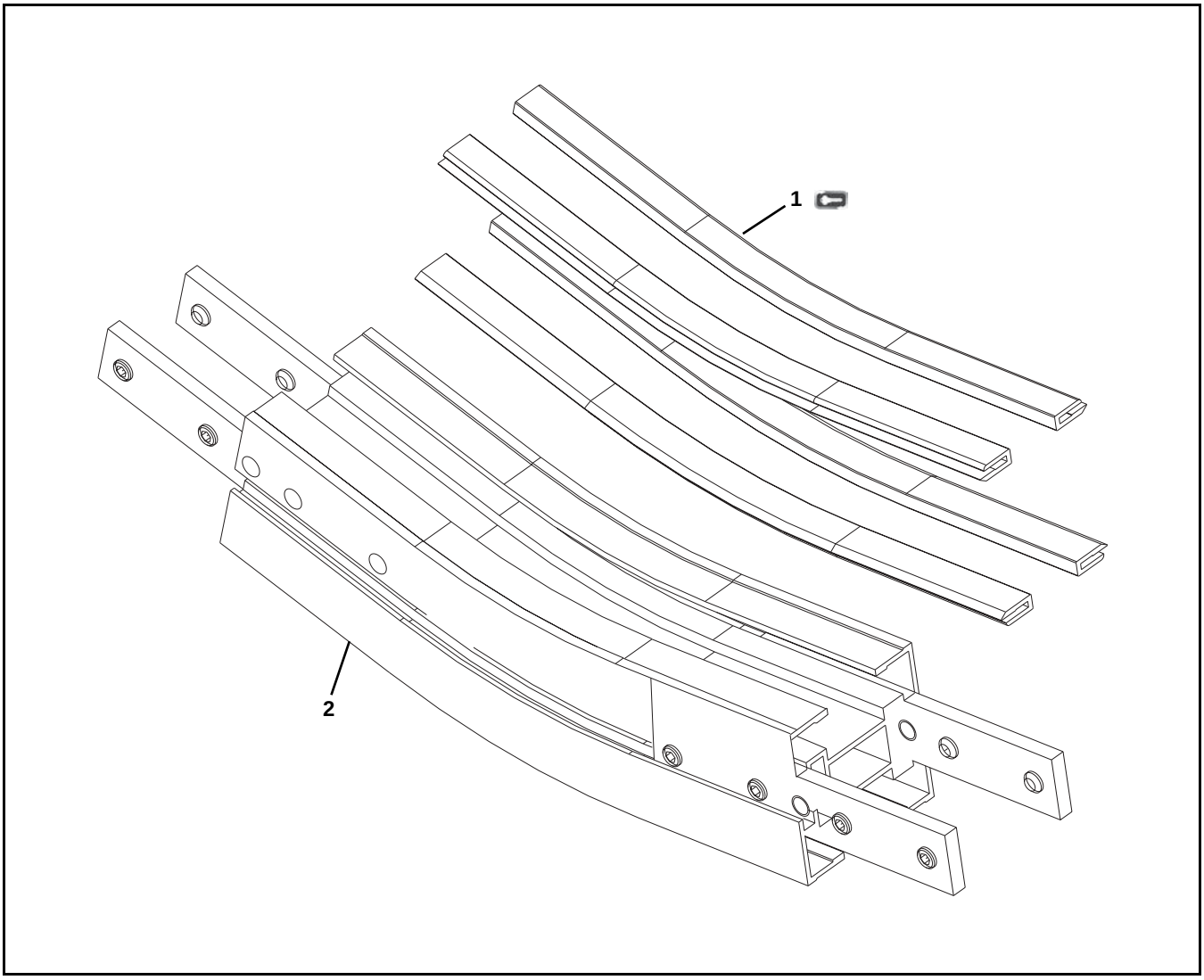

Item	Part Number	Description
1	834-001-LLLLL	Wear Strips
2	834-030	5° Knuckle Kit
	834-036	7° Knuckle Kit
	834-031	10° Knuckle Kit
	834-037	15° Knuckle Kit
	834-032	20° Knuckle Kit
	834-033	30° Knuckle Kit
LLLLL = Part length in inches with two decimal places.		
Length Example: Length = 95.25" LLLLL = 09525		

105 Width Knuckle Frame Assembly

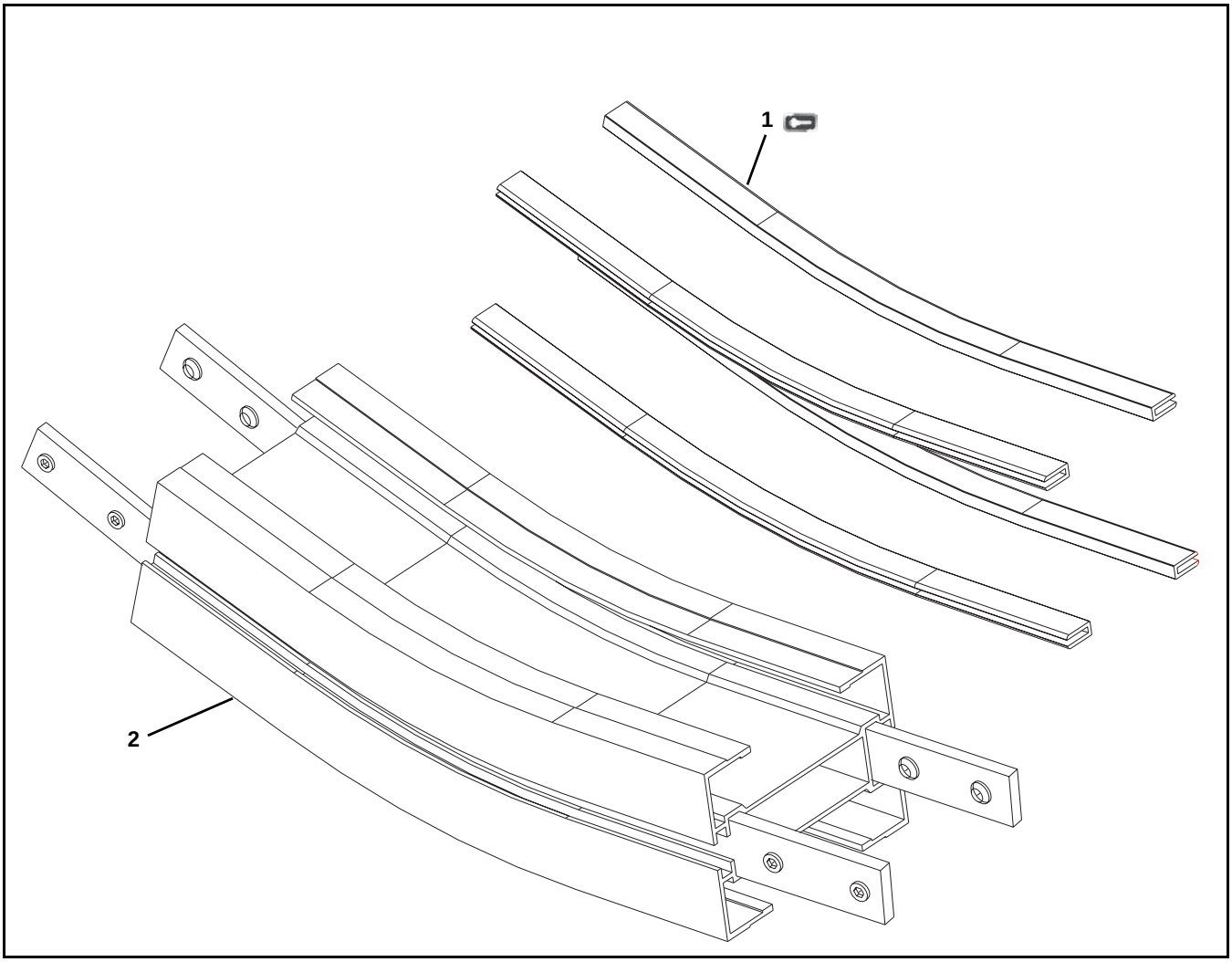

Item	Part Number	Description
1	834-001-LLLLL	Wear Strips
2	834-050	5° Knuckle Kit
	834-056	7° Knuckle Kit
	834-051	10° Knuckle Kit
	834-057	15° Knuckle Kit
	834-052	20° Knuckle Kit
	834-053	30° Knuckle Kit
LLLLL = Part length in inches with two decimal places.		
Length Example: Length = 95.25" LLLLL = 09525		

150 Width Knuckle Frame Assembly

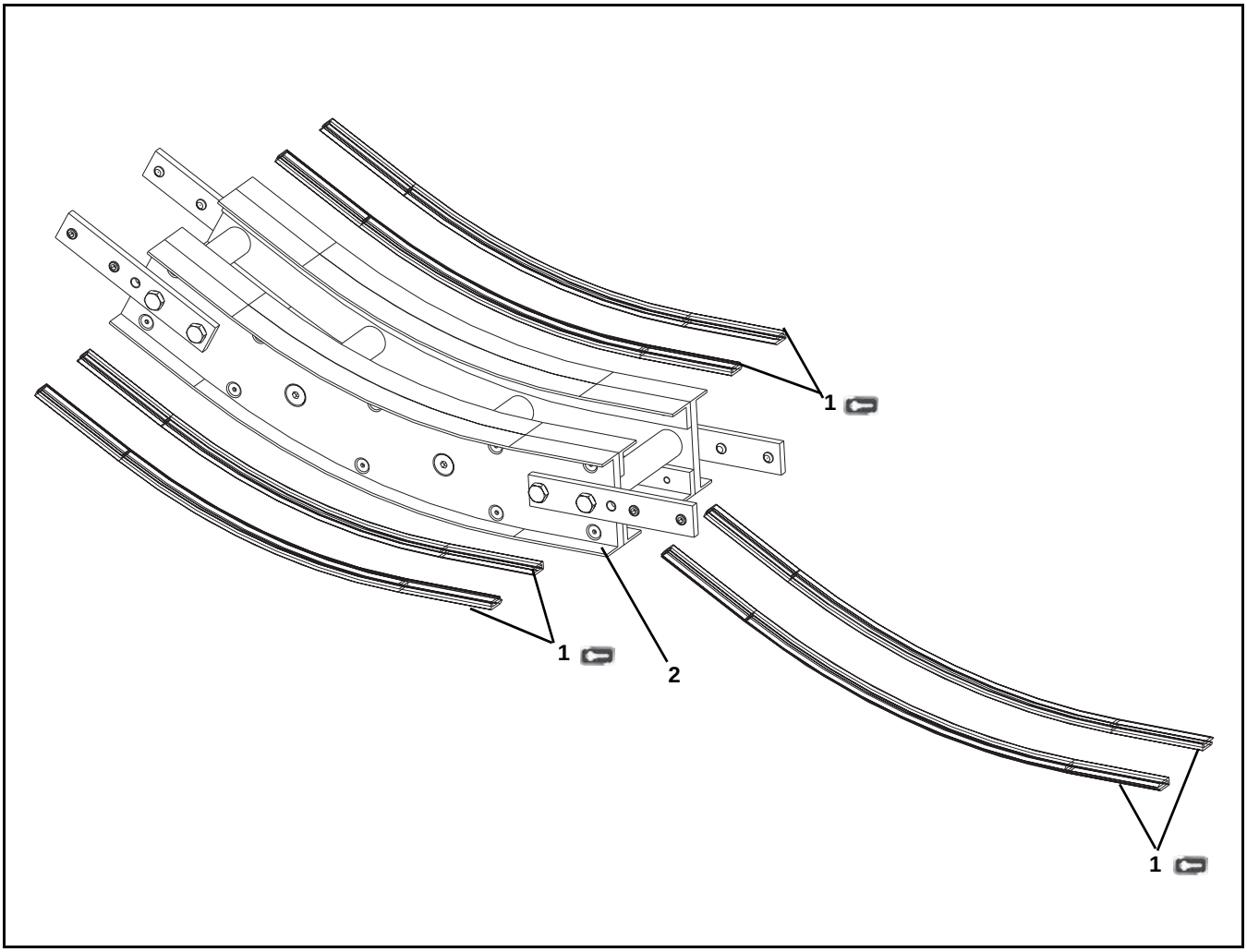

Item	Part Number	Description
1	834-001-LLLLL	Wear Strips
2	834-070	5° Knuckle Kit
	834-071	10° Knuckle Kit
	834-072	20° Knuckle Kit
	834-073	30° Knuckle Kit
LLLLL = Part length in inches with two decimal places.		
Length Example: Length = 95.25" LLLLL = 09525		

04 3" High Sides for Straight Modules

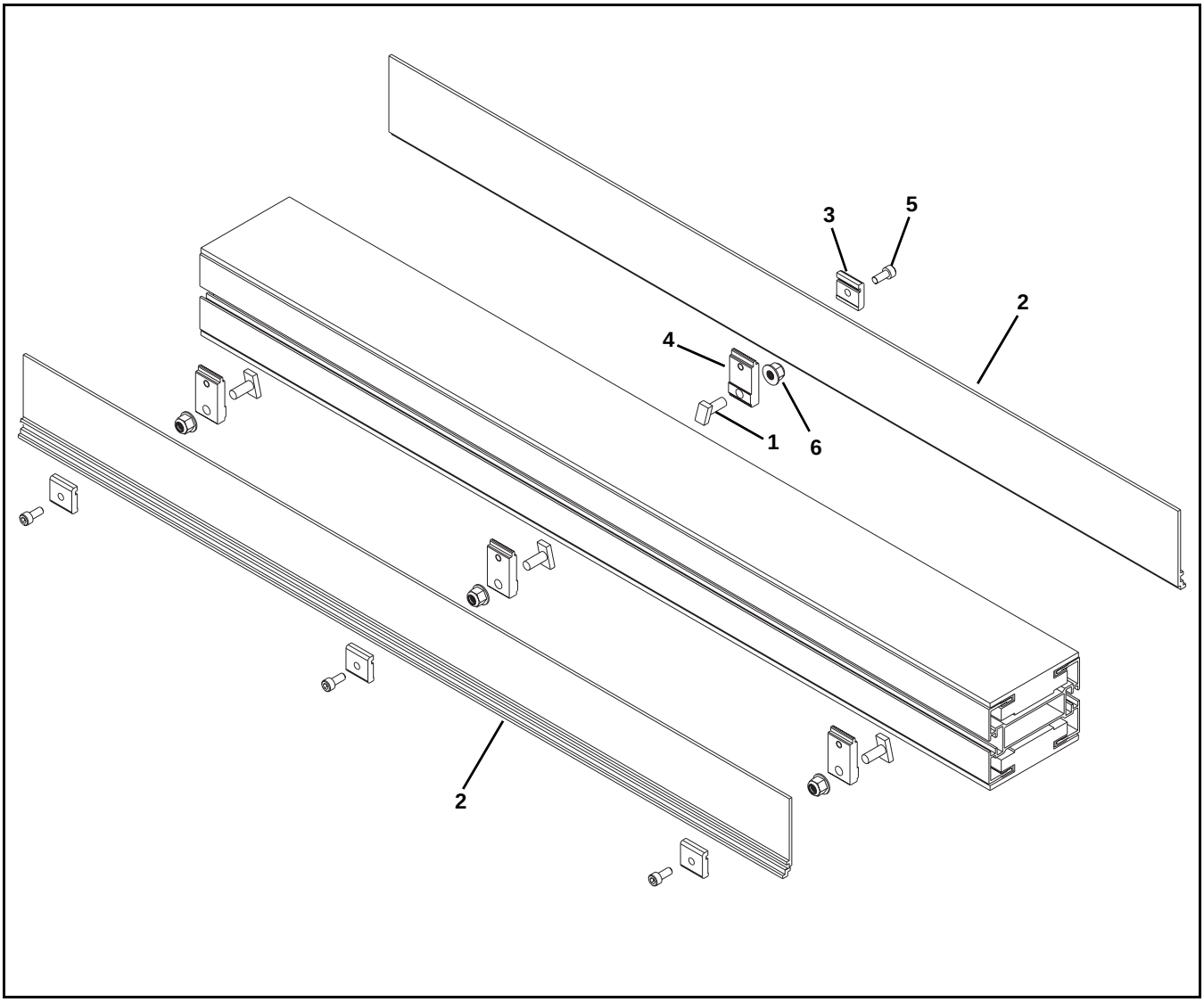

Item	Part Number	Description
1	834-007	Stud, M8 x 20 mm
2	204127-LLLLL	3" High Side
3	204566	Mounting Clip
4	210829	Guide Clip Adapter
	210831	Guide Clip Adapter for Tail Mount Only
	210836	Guide Clip Adapter for Roller Transfer Tail Mount Only
5	920614M	Socket Head Screw, M6-1.00 x 14 mm
6	990812M	Hex Nut, M8-1.25
LLLLL = Part length in inches with two decimal places.		
Length Example: Length = 95.25" LLLLL = 09525		

04 3" High Sides for Curve Modules

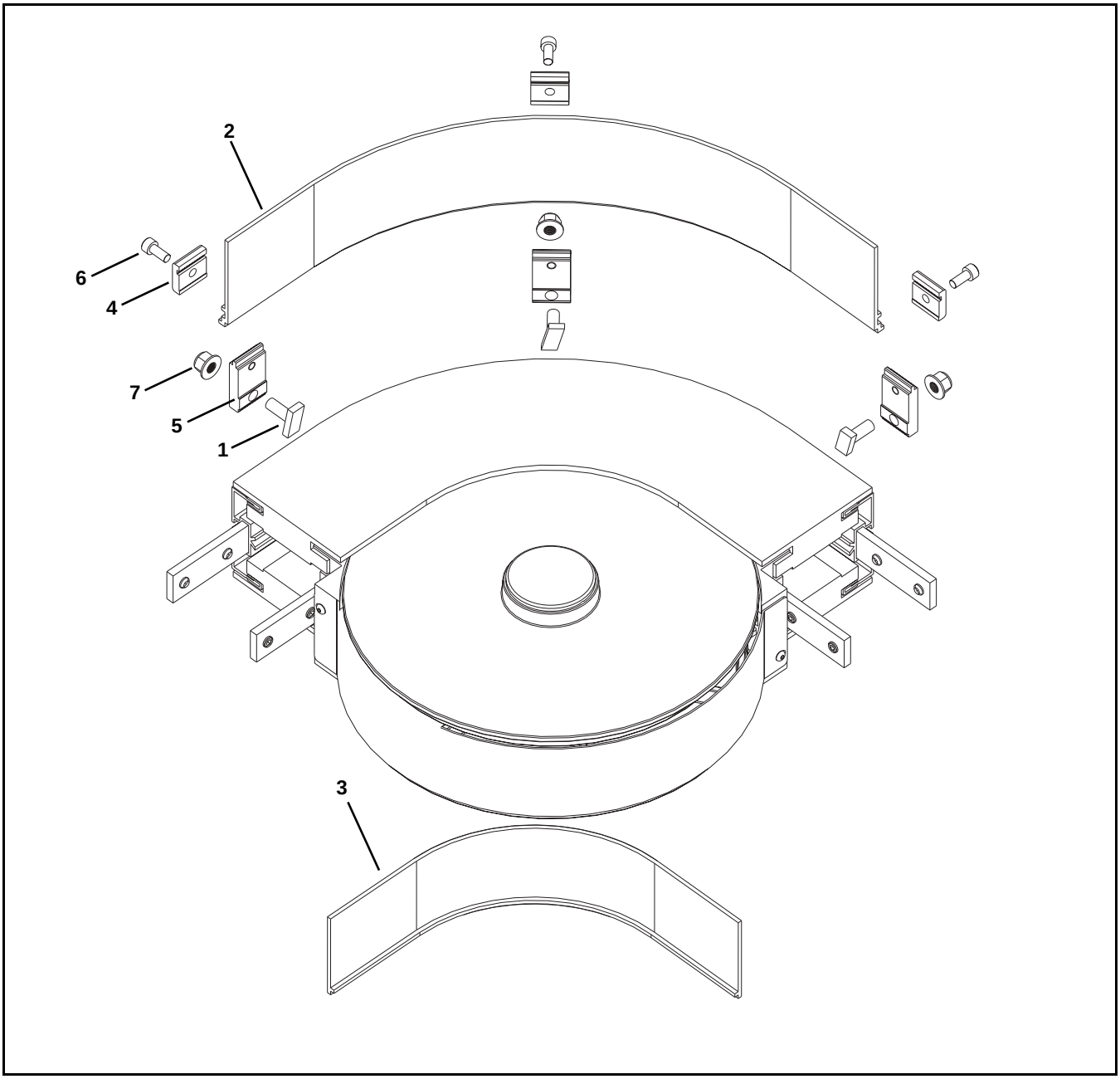

Item	Part Number	Description
1	834-007	Stud, M8 x 20 mm
2	204134-WWW-AAA	3" High Side for Wheel Bend Curves - Outside Edge
	204336-WWW-AAA	3" High Side for 500R Plain Bend Curves - Outside Edge
	204340-WWW-AAA	3" High Side for 700R Plain Bend Curves - Outside Edge
3	204136-WWW-AAA	3" High Side for Wheel Bend Curves - Inside Edge
	204335-WWW-AAA	3" High Side for 500R Plain Bend Curves - Inside Edge
	204339-WWW-AAA	3" High Side for 700R Plain Bend Curves - Inside Edge

Item	Part Number	Description
4	204566	Mounting Clip
5	210829	Clip Guide Adapter
6	920614M	Socket Head Screw, M6-1.00 x 14 mm
7	990812M	Hex Nut, M8-1.25
WWW = Conveyor width reference: 065, 105, 150		
AAA = Angle of curve: 045, 090, 135, 180		

04 3" High Sides for Incline/Decline Modules

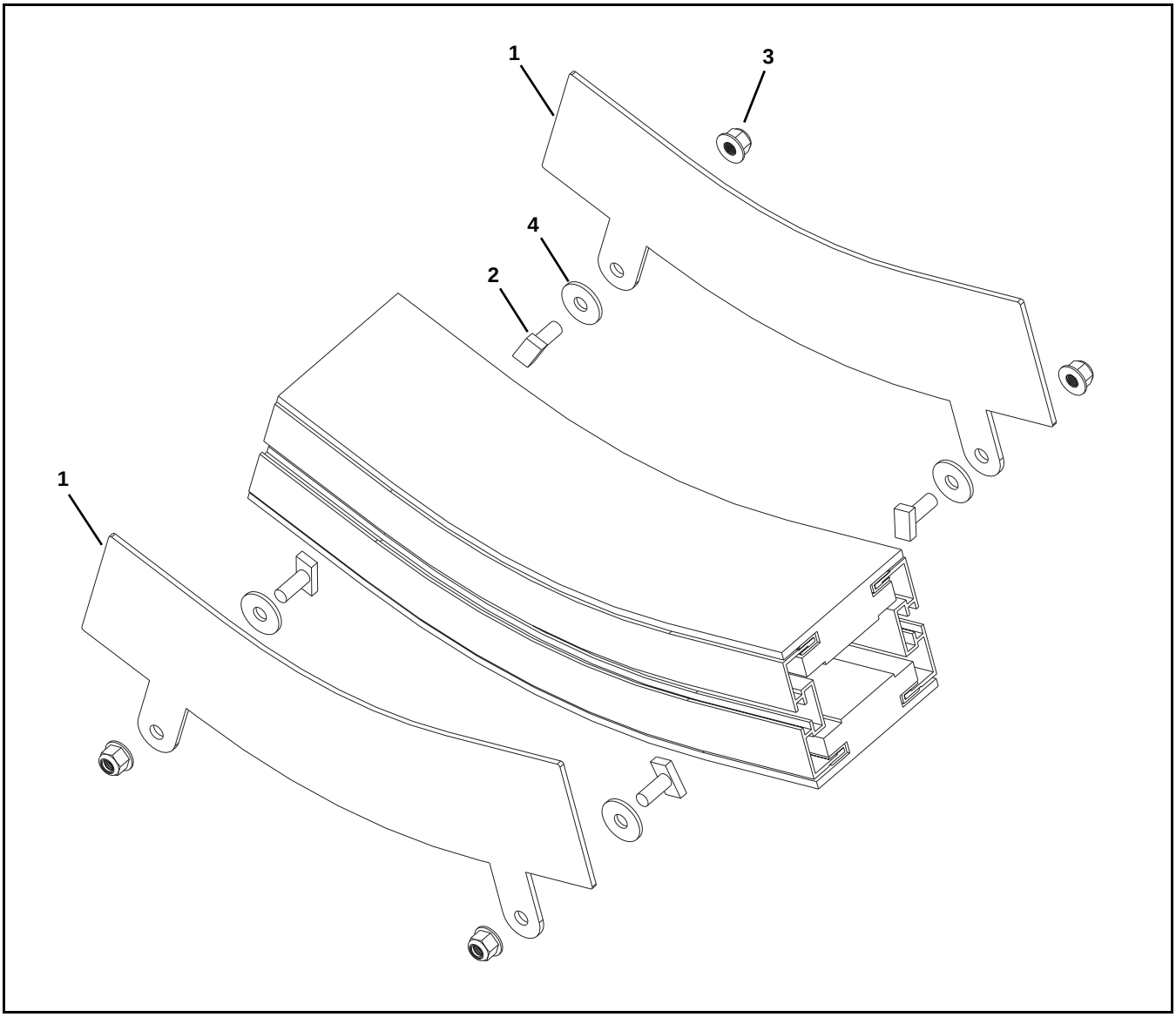

Item	Part Number	Description
1	204144-AA-WWW	Guide Plate for Lower knuckle
	204174-AA-WWW	Guide Plate for Upper Knuckle
2	834-007	Stud, M8 x 20 mm
3	990812M	Hex Nut, M8-1.25
4	204145	Spacer
WWW = Conveyor width reference: 065, 105, 150		
AAA = Angle of curve: 045, 090, 135, 180		

05 1.50" High Sides for Straight Modules

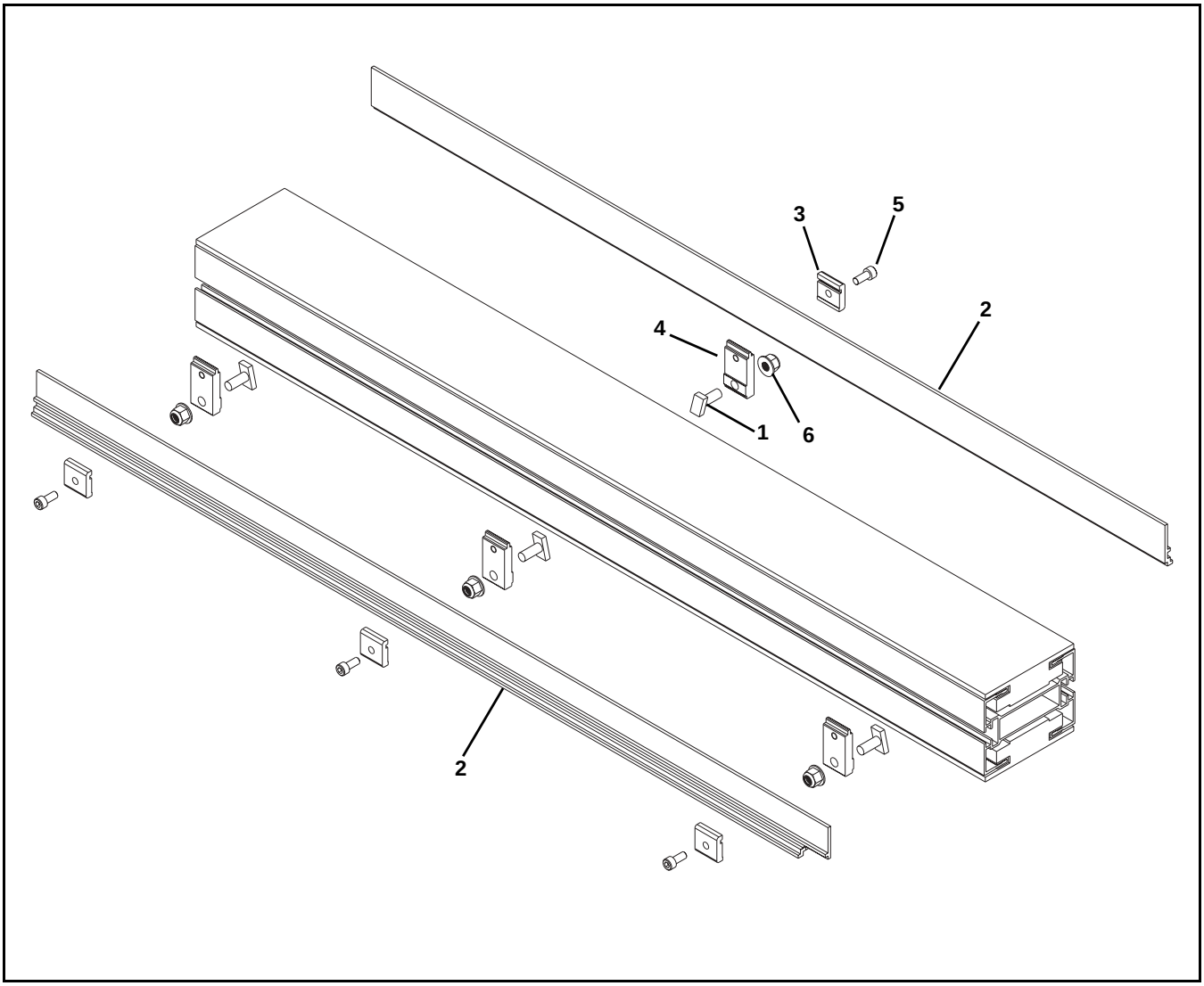

Item	Part Number	Description
1	834-007	Stud, M8 x 20 mm
2	204172-LLLLL	1.50" High Side
3	204566	Mounting Clip
4	210829	Guide Clip Adapter
	210831	Guide Clip Adapter for Tail Mount Only
	210836	Guide Clip Adapter for Roller Transfer Tail Mount Only
5	920614M	Socket Head Screw, M6-1.00 x 14 mm
6	990812M	Hex Nut, M8-1.25
LLLLL = Part length in inches with two decimal places.		
Length Example: Length = 95.25" LLLLL = 09525		

05 1.50" High Sides for Curve Modules

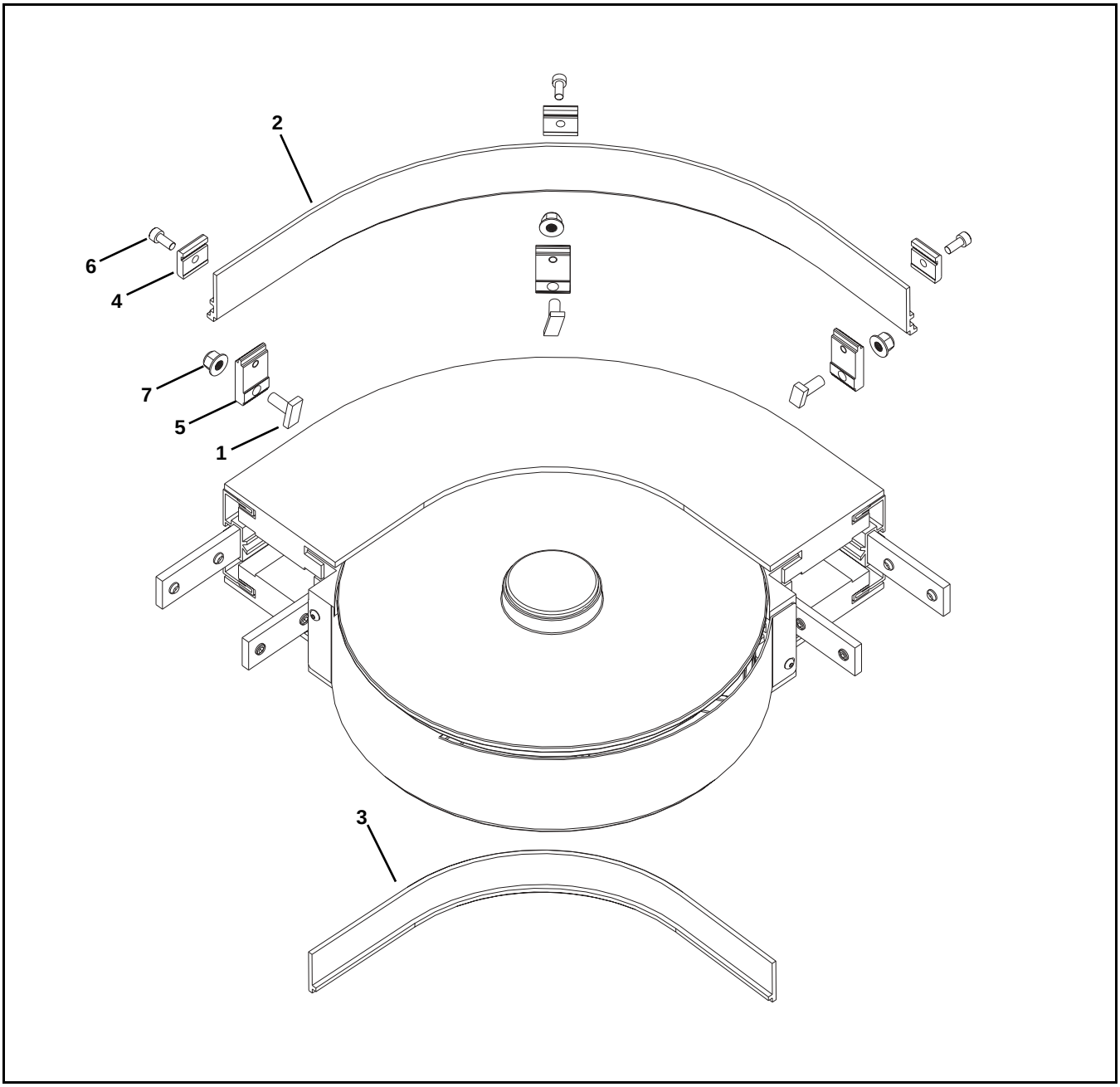

Item	Part Number	Description
1	834-007	Stud, M8 x 20 mm
2	204135-WWW-AAA	1.50" High Side for Wheel Bend Curves - Outside Edge
	204334-WWW-AAA	1.50" High Side for 500R Plain Bend Curves - Outside Edge
	204338-WWW-AAA	1.50" High Side for 700R Plain Bend Curves - Outside Edge
3	204137-WWW-AAA	1.50" High Side for Wheel Bend Curves - Inside Edge
	204333-WWW-AAA	1.50" High Side for 500R Plain Bend Curves - Inside Edge
	204337-WWW-AAA	1.50" High Side for 700R Plain Bend Curves - Inside Edge

Item	Part Number	Description
4	204566	Mounting Clip
5	210829	Clip Guide Adapter
6	920614M	Socket Head Screw, M6-1.00 x 14 mm
7	990812M	Hex Nut, M8-1.25
WWW = Conveyor width reference: 065, 105, 150		
AAA = Angle of curve: 045, 090, 135, 180		

05 1.50" High Sides for Incline/Decline Modules

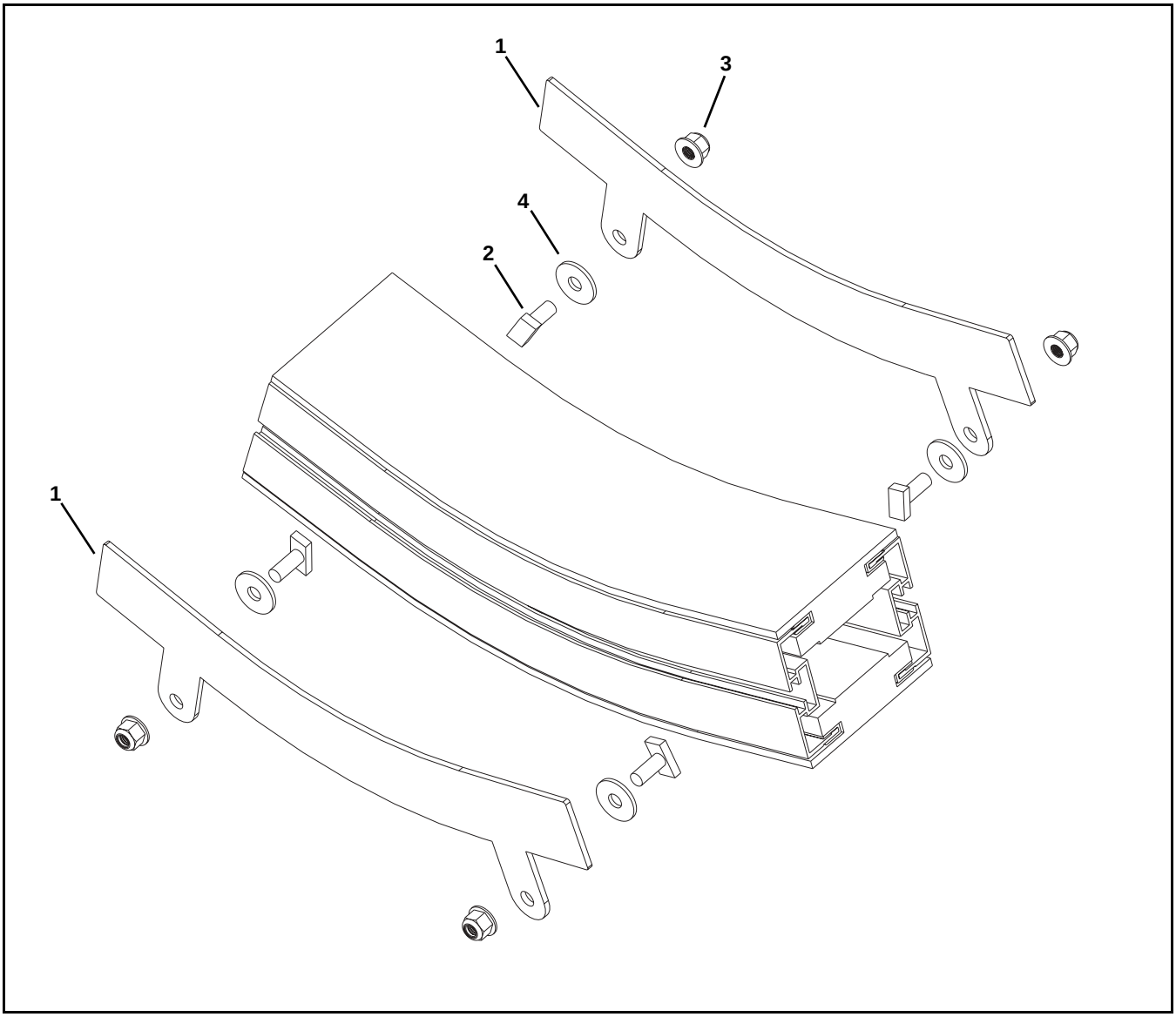

Item	Part Number	Description
1	204342-AA-WWW	Guide Plate for Lower knuckle
	204343-AA-WWW	Guide Plate for Upper Knuckle
2	834-007	Stud, M8 x 20 mm
3	990812M	Hex Nut, M8-1.25
4	204145	Spacer
WWW = Conveyor width reference: 065, 105, 150		
AAA = Angle of curve: 045, 090, 135, 180		

13 Fully Adjustable Guiding for Straight Modules

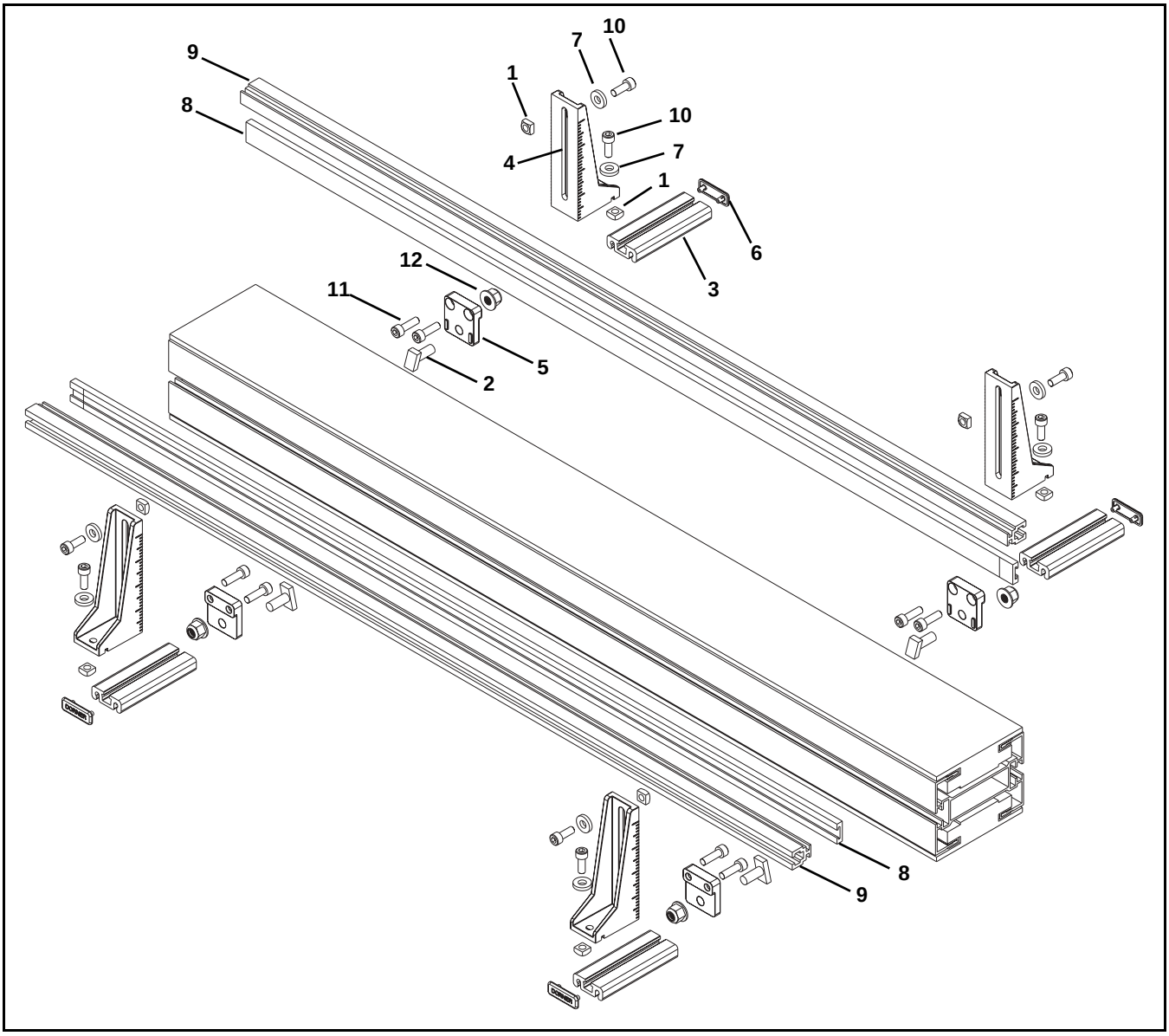

Item	Part Number	Description
1	807-920	Square Nut, M6-1.0
2	834-007	Stud, M8 x 20 mm
3	210846-00353	Extrusion Base
4	210847	Mounting Bracket
5	210848	Mounting Block
6	210849	Cap
7	605279P	Washer
8	614068P-LLLLL	Guiding
9	636975P-LLLLL	Guide Rail
10	920616M	Socket Head Screw, M6-1.00 x 16 mm
11	920516M	Socket Head Screw, M5-0.80 x 16 mm
12	990812M	Hex Nut, M8-1.25
LLLLL = Part length in inches with two decimal places.		
Length Example: Length = 95.25" LLLLL = 09525		

13 Fully Adjustable Guiding for Curve Modules

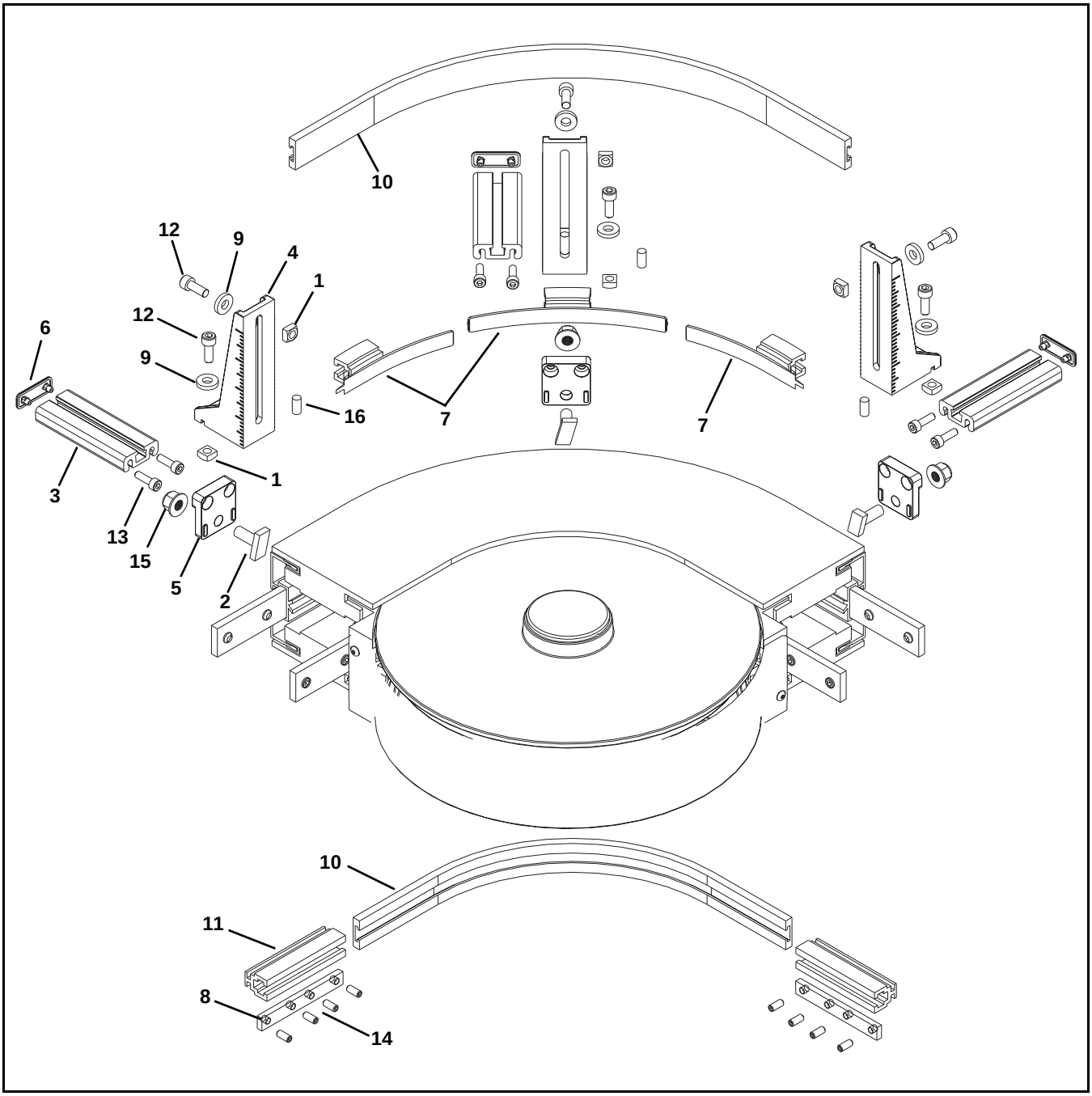

Item	Part Number	Description
1	807-920	Square Nut, M6-1.0
2	834-007	Stud, M8 x 20 mm
3	210846-00353	Extrusion Base
4	210847	Mounting Bracket
5	210848	Mounting Block
6	210849	Cap
7	203494	Guide Support
8	210913	Nut Bar
9	605279P	Washer
10	614068P-LLLLL	Guiding

Item	Part Number	Description
11	636975P-LLLLL	Guide Rail
12	920616M	Socket Head Screw, M6-1.00 x 16 mm
13	920516M	Socket Head Screw, M5-0.80 x 16 mm
14	930510M	Flat Head Screw, M5-0.80 x 10 mm
15	990812M	Hex Nut, M8-1.25
16	913-051	Roll Pin
LLLLL = Part length in inches with two decimal places.		
Length Example: Length = 95.25" LLLLL = 09525		

14 Tool-Less Fully Adjustable Guiding for Straight Modules

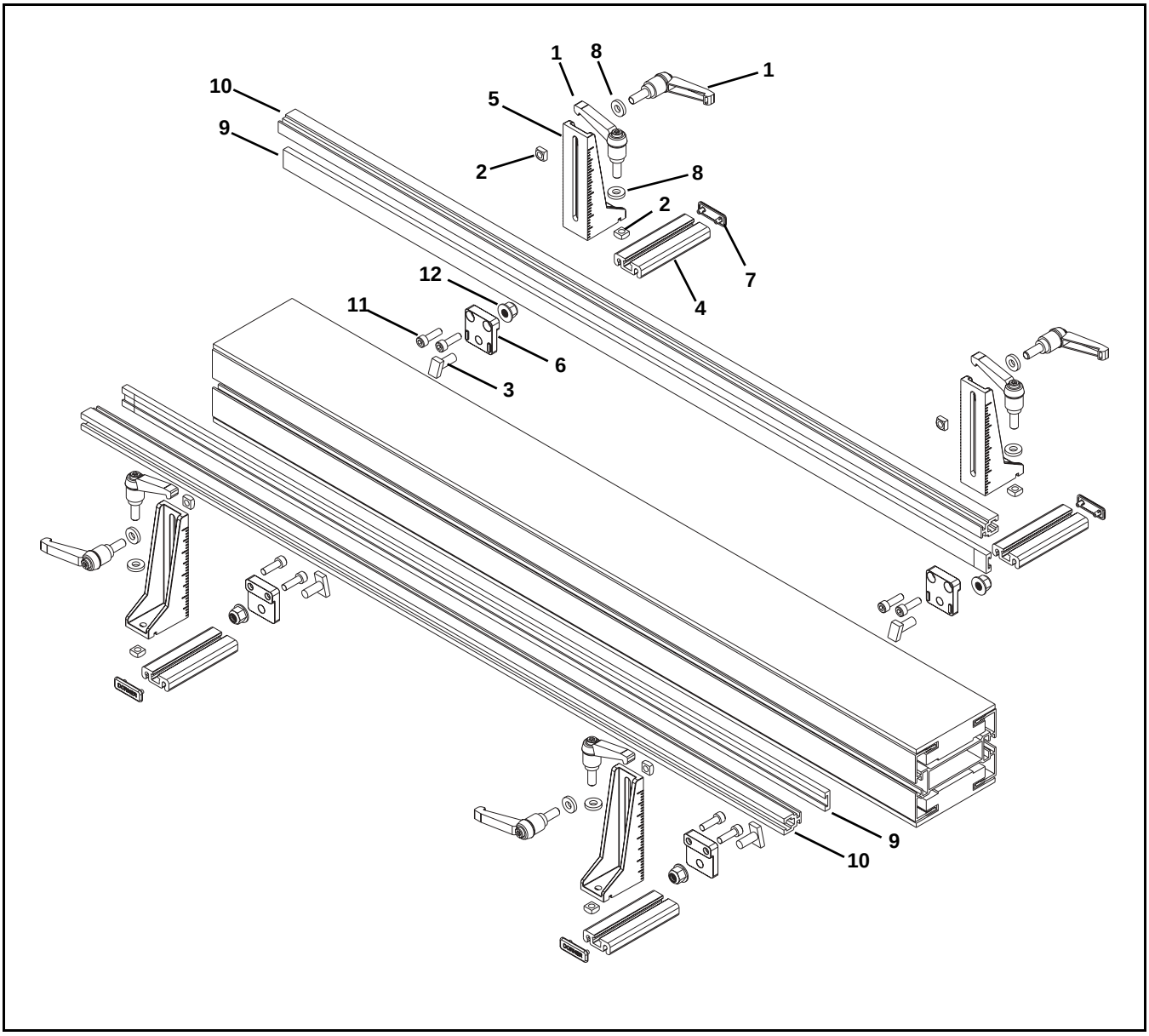

Item	Part Number	Description
1	807-2272	Handle
2	807-920	Square Nut, M6-1.0
3	834-007	Stud, M8 x 20 mm
4	210846-00353	Extrusion Base
5	210847	Mounting Bracket
6	210848	Mounting Block
7	210849	Cap
8	605279P	Washer
9	614068P-LLLLL	Guiding
10	636975P-LLLLL	Guide Rail
11	920516M	Socket Head Screw, M5-0.80 x 16 mm
12	990812M	Hex Nut, M8-1.25
LLLLL = Part length in inches with two decimal places.		
Length Example: Length = 95.25" LLLLL = 09525		

14 Tool-Less Fully Adjustable Guiding for Curve Modules

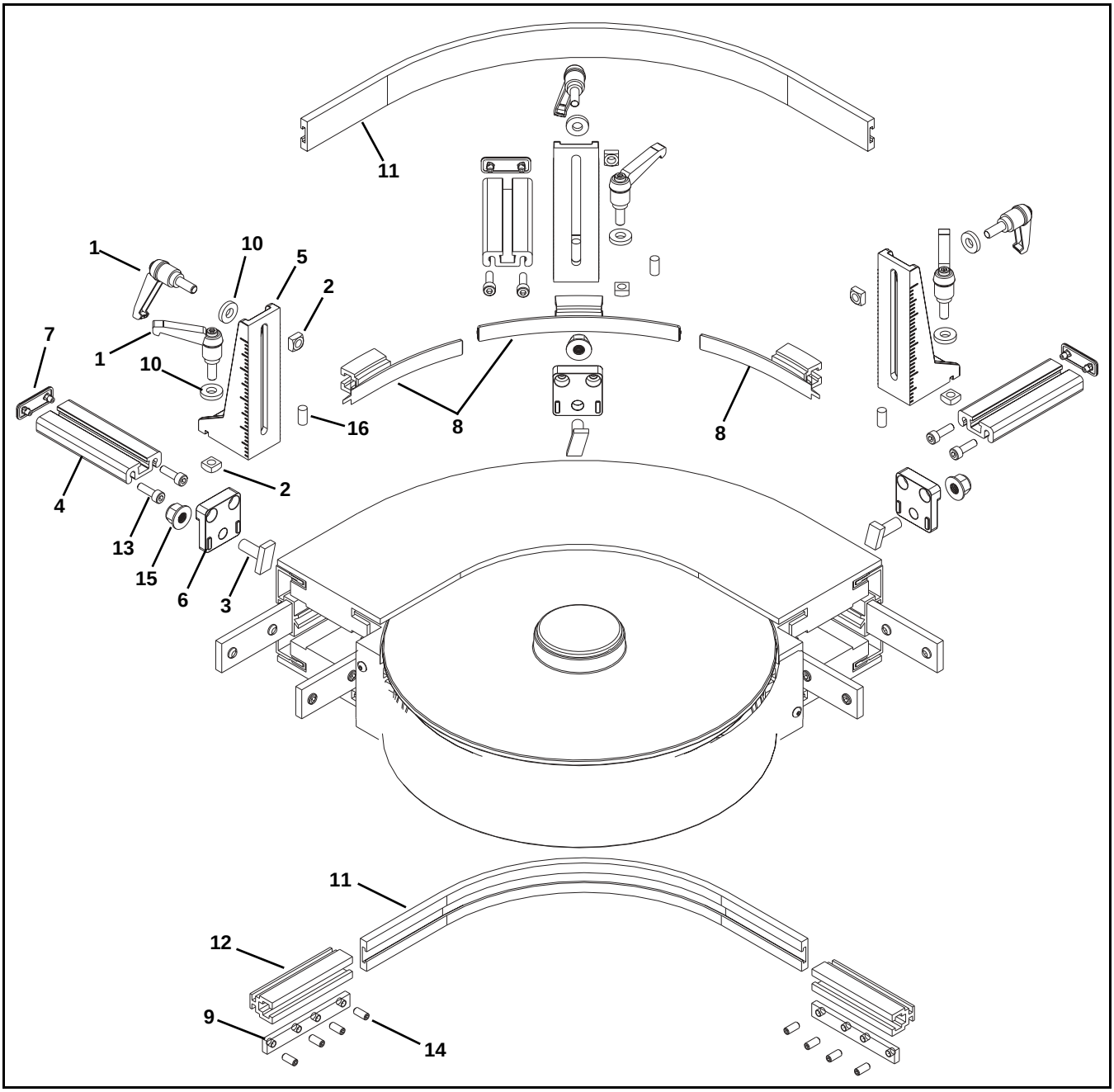

Item	Part Number	Description
1	807-2272	Handle
2	807-920	Square Nut, M6-1.0
3	834-007	Stud, M8 x 20 mm
4	210846-00353	Extrusion Base
5	210847	Mounting Bracket
6	210848	Mounting Block
7	210849	Cap
8	203494	Guide Support
9	210913	Nut Bar
10	605279P	Washer
11	614068P-LLLLL	Guiding

Item	Part Number	Description
12	636975P-LLLLL	Guide Rail
13	920516M	Socket Head Screw, M5-0.80 x 16 mm
14	930510M	Flat Head Screw, M5-0.80 x 10 mm
15	990812M	Hex Nut, M8-1.25
16	913-051	Roll Pin
LLLLL = Part length in inches with two decimal places.		
Length Example: Length = 95.25" LLLLL = 09525		

Service Parts

16 Gull Wing Guiding for Straight Modules

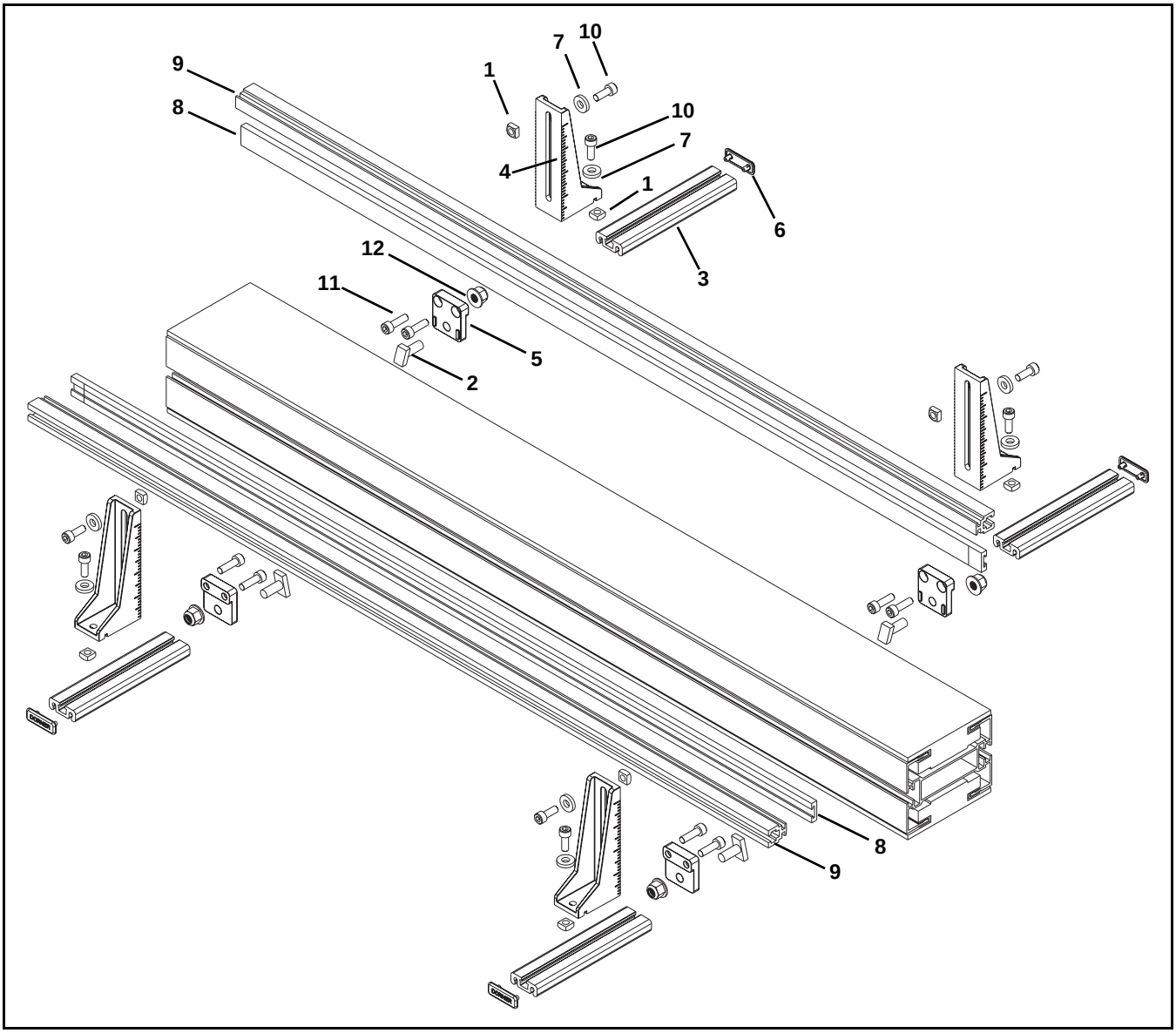

Item	Part Number	Description
1	807-920	Square Nut, M6-1.0
2	834-007	Stud, M8 x 20 mm
3	210846-00600	Extrusion Base
4	210847	Mounting Bracket
5	210848	Mounting Block
6	210849	Cap
7	605279P	Washer
8	614068P-LLLLL	Guiding
9	636975P-LLLLL	Guide Rail
10	920616M	Socket Head Screw, M6-1.00 x 16 mm
11	920516M	Socket Head Screw, M5-0.80 x 16 mm
12	990812M	Hex Nut, M8-1.25
LLLLL = Part length in inches with two decimal places.		
Length Example: Length = 95.25" LLLLL = 09525		

16 Gull Wing Guiding for Curve Modules

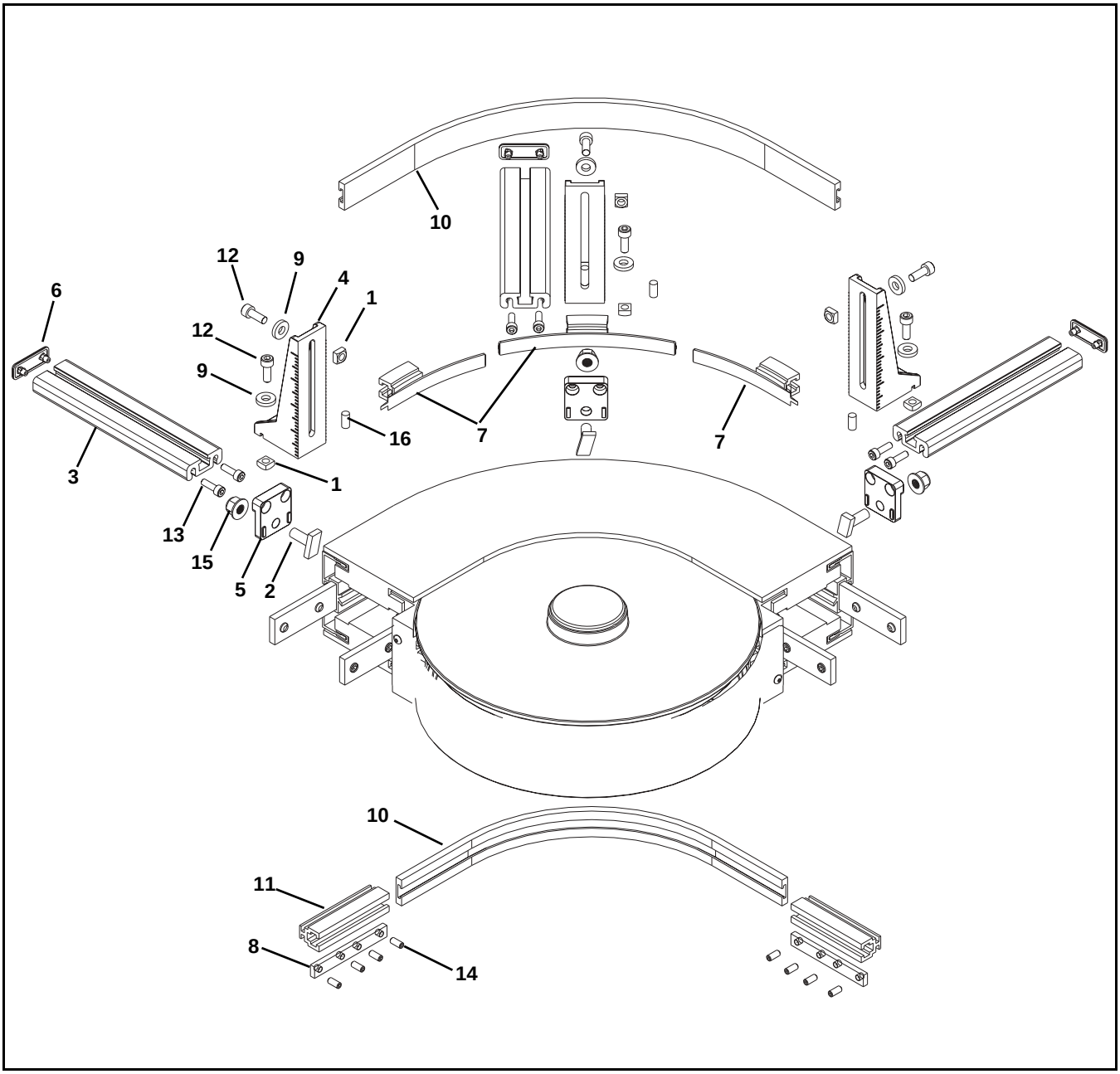

Item	Part Number	Description
1	807-920	Square Nut, M6-1.0
2	834-007	Stud, M8 x 20 mm
3	210846-00600	Extrusion Base
4	210847	Mounting Bracket
5	210848	Mounting Block
6	210849	Cap
7	203494	Guide Support
8	210913	Nut Bar
9	605279P	Washer
10	614068P-LLLLL	Guiding
11	636975P-LLLLL	Guide Rail
12	920616M	Socket Head Screw, M6-1.00 x 16 mm

Item	Part Number	Description
13	920516M	Socket Head Screw, M5-0.80 x 16 mm
14	930510M	Flat Head Screw, M5-0.80 x 10 mm
15	990812M	Hex Nut, M8-1.25
16	913-051	Roll Pin
LLLLL = Part length in inches with two decimal places.		
Length Example: Length = 95.25" LLLLL = 09525		

#13 & #14 - Adjustable Guiding and #16 - Gull Wing Guiding for Incline/ Decline Modules

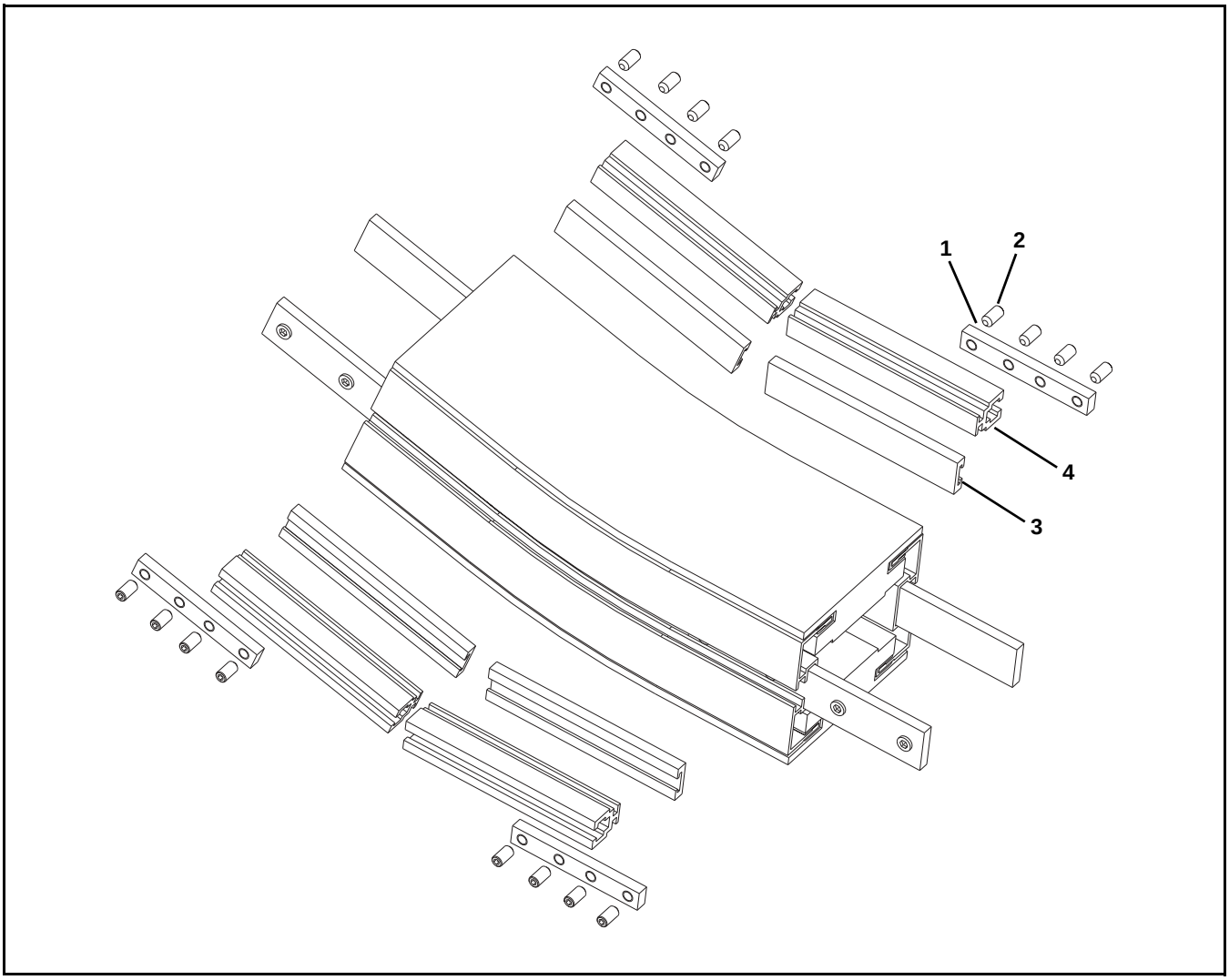

Item	Part Number	Description
1	210913	Nut Bar
2	930510M	Flat Head Screw, M5-0.80 x 10 mm
3	614068P-LLLLL	Guiding
4	636975P-LLLLL	Guide Rail
LLLLL = Part length in inches with two decimal places.		
Length Example: Length = 95.25" LLLLL = 09525		

Power Transfer

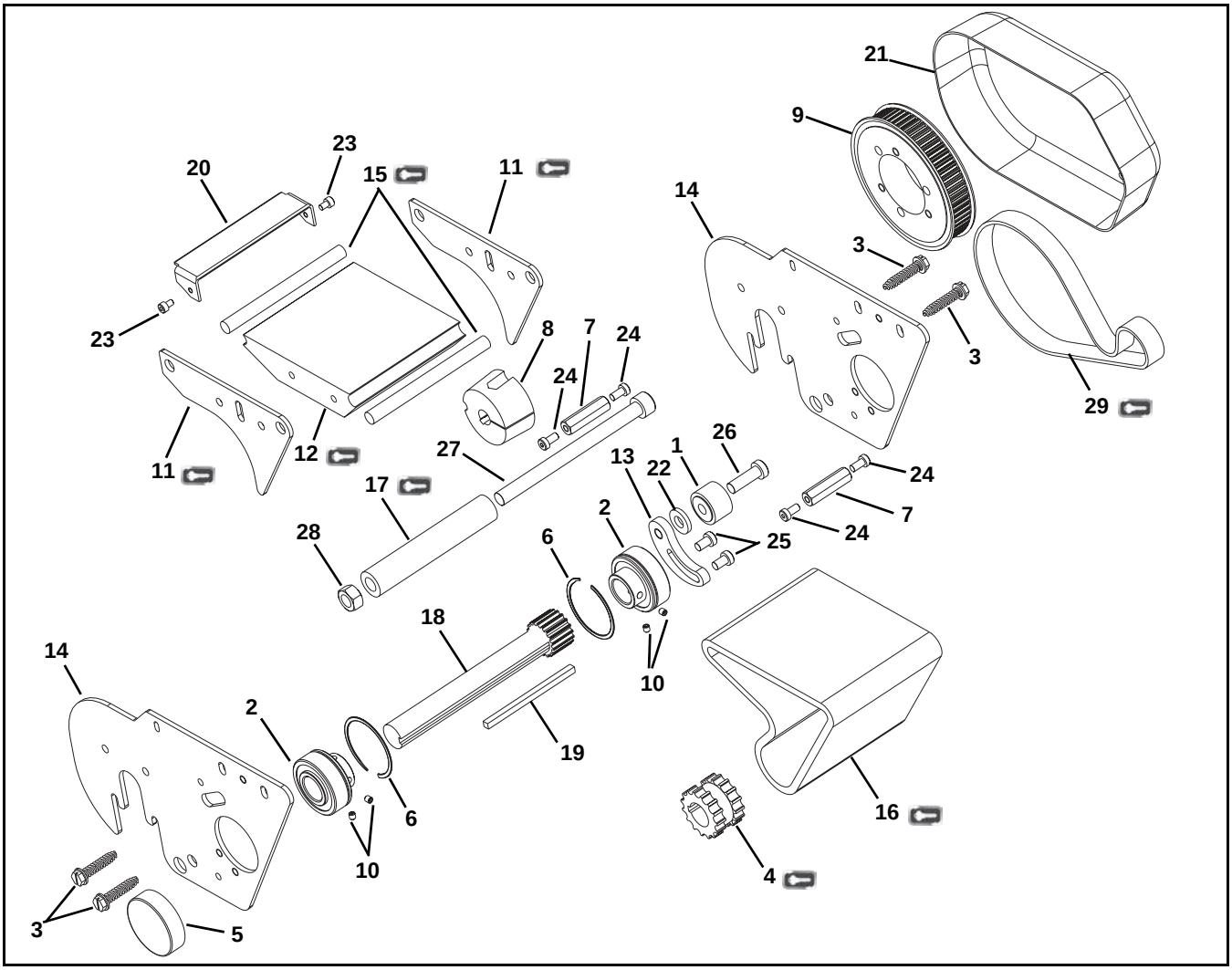

Item	Part Number	Description
1	802-046	Cam Bearing
2	802-110	Bearing
3	807-1884	Sheet Metal Screws, #14 x 1.25
4	807-2009	Sprocket
5	807-2285	Cover
6	807-2286	Retaining Ring
7	807-2287	Hex Post
8	811-289	Bushing
9	811-559	Pulley
10	907-115	Socket Head Set Screw, #10-32 x 0.19
11	203229	Side Guide Plate
12	203230-WWW	Wear Bar
13	203231	Timing Belt Tensioner
14	203243	Side Plate for 65 width Conveyors
	203244	Side Plate for 105 & 150 width Conveyors
15	203247-WWW	Wear Rod

Item	Part Number	Description
16	203249-WWW	Power Transfer Belt
17	203263-WWW	Tensioner Tube
18	203264-WWW	Shaft Assembly
19	203267-WWW	Square Key, 3/16” x 105 mm
20	203364-WWW	Tensioner Plate
21	350505	Power Transfer Cover
22	605280P	Washer
23	920406M	Socket Head Screw, M4-0.70 x 6 mm
24	920591M	Low Head Cap Screw, M5-0.80 x 10 mm
25	920691M	Low Head Cap Screw, M6-1.00 x 10 mm
26	920895M	Low Head Cap Screw, M8-1.25 x 25 mm
27	9210130M	Socket Head Screw, M10-0.50 x 130 mm
28	991011M	Hex Nut, M10-1.50
29	814-065	Timing Belt 5 mm x 15 mm
WWW= Conveyor width reference: 065, 105, 150		

Service Parts

Transfer Roller

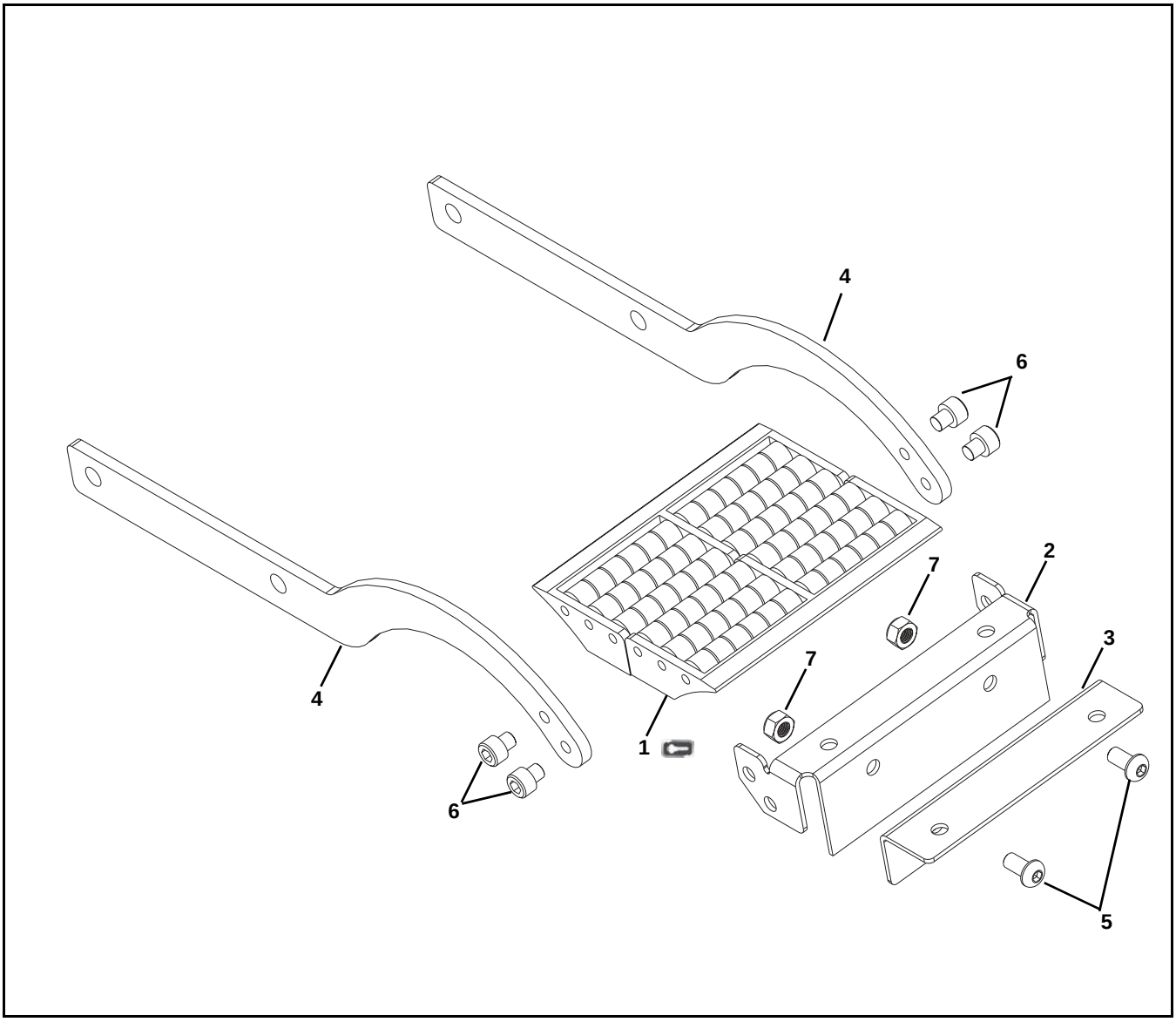

Item	Part Number	Description
1	807-1829	Transfer Roller for 65 Width Conveyors (2x)
	807-1830	Transfer Roller for 105 Width Conveyors (2x)
	807-1829	Transfer Roller for 150 Width Conveyors (4x)
2	203068-WWW	Bracket
3	203069-WWW	Extension Bracket
4	204138	Roller Bar
5	910612M	Button Head Screw, M6-1.00 x 12 mm
6	920606M	Socket Head Screw, M6-1.00 x 6 mm
7	990602M	Hex Nut
WWW= Conveyor width reference: 065, 105, 150		

Transfer Roller to 2200 Series Conveyor

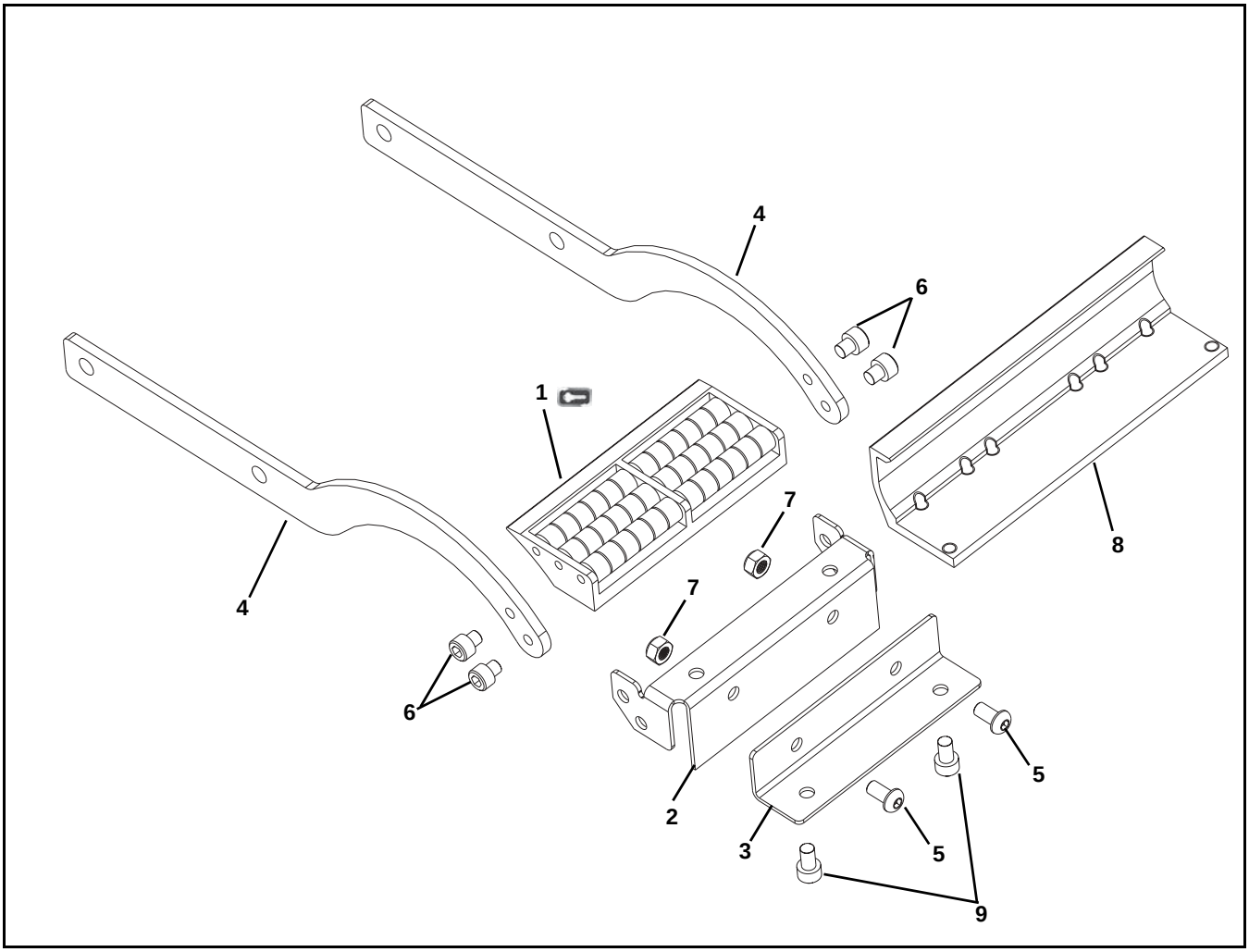

Item	Part Number	Description
1	807-1829	Transfer Roller for 65 Width Conveyors (1x)
	807-1830	Transfer Roller for 105 Width Conveyors (1x)
	807-1829	Transfer Roller for 150 Width Conveyors (2x)
2	203068-WWW	Bracket
3	203069-WWW	Extension Bracket
4	204138	Roller Bar
5	910612M	Button Head Screw, M6-1.00 x 12 mm
6	920606M	Socket Head Screw, M6-1.00 x 6 mm
7	990602M	Hex Nut
8	204140	Transfer Plate
9	920610M	Socket Head Screw, M6-1.00 x 10 mm
WWW= Conveyor width reference: 065, 105, 150		

Mounting Brackets

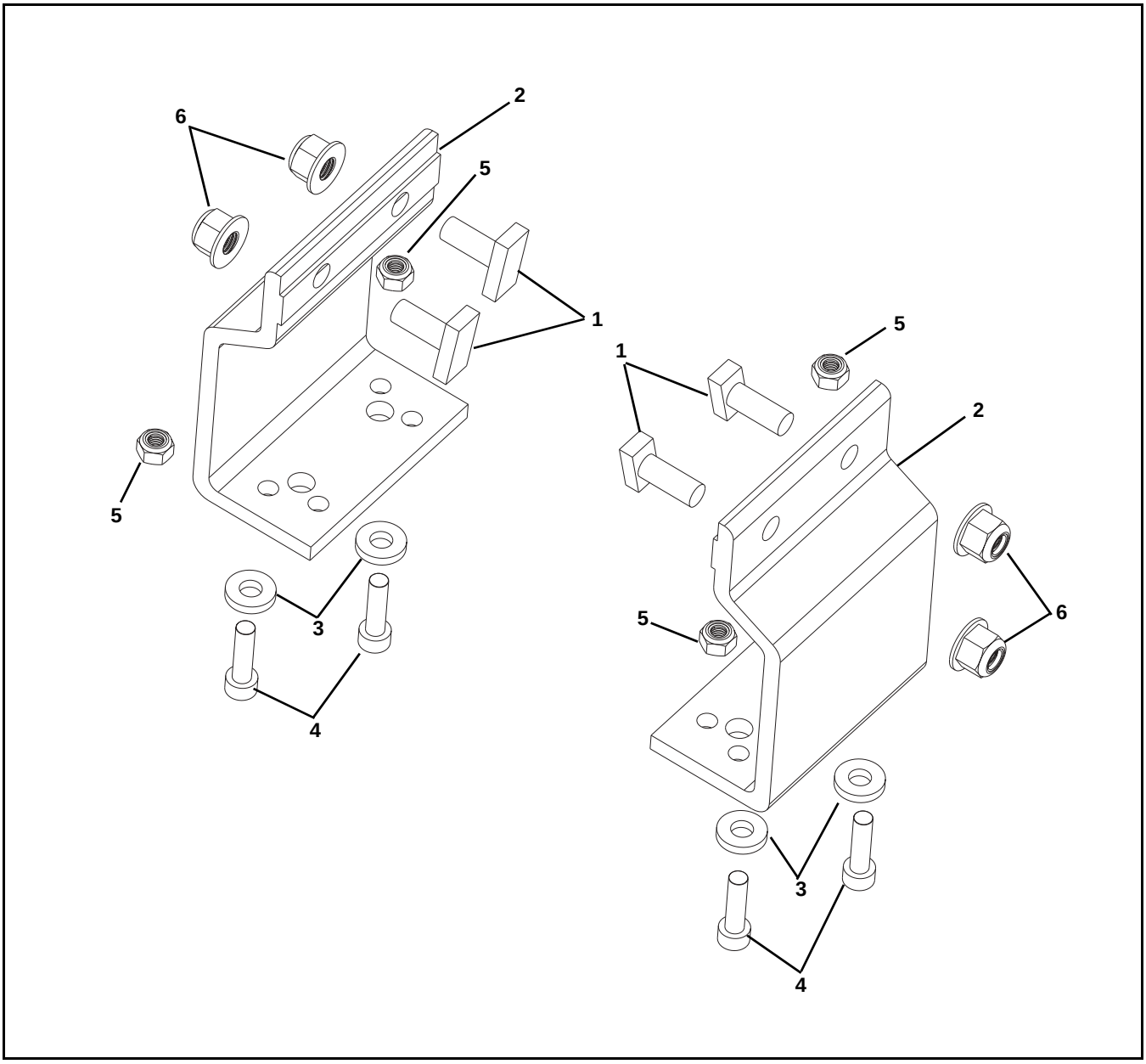

Item	Part Number	Description
1	834-007	Stud, M8 x 20 mm
2	834-008	Mounting Bracket
3	605279P	Washer
4	920622M	Socket Head Screw, M6-1.00 x 22 mm
5	990602M	Hex Nut, M6-1.00
6	990812M	Flanged Hex Nut, M8-1.25

Motor Mounting Assembly

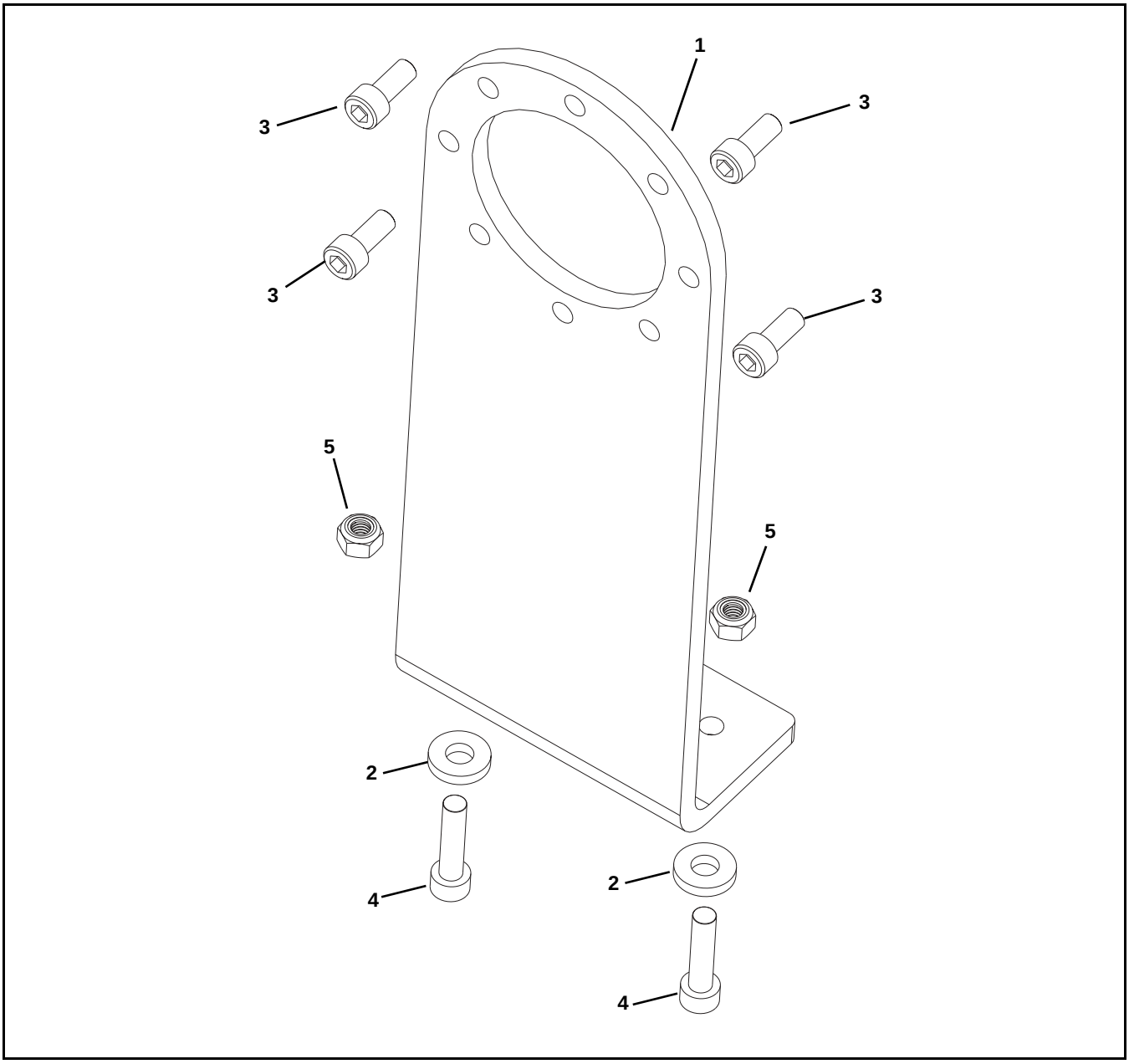

Item	Part Number	Description
1	203166	Motor Mounting Bracket
2	605279P	Washer
3	920614M	Socket Head Screw, M6-1.00 x 14 mm
4	920625M	Socket Head Screw, M6-1.00 x 25 mm
5	990602M	Hex Nut, M6-1.00

Connecting Assembly

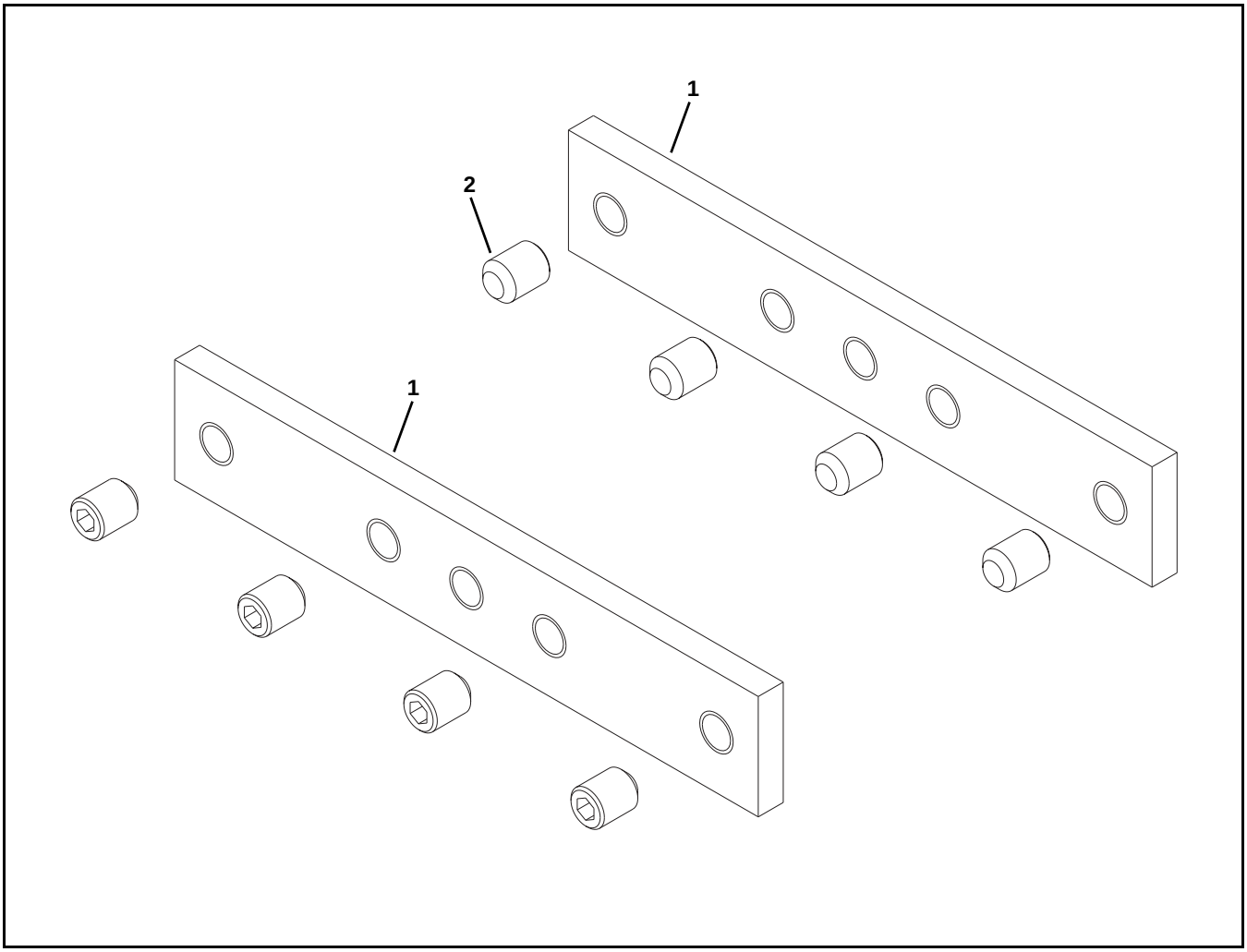

Item	Part Number	Description
1	834-005	Connecting Bracket
2	970810M	Set Screw, M8-1.25 x 10 mm

Gearmotor Mounting Package

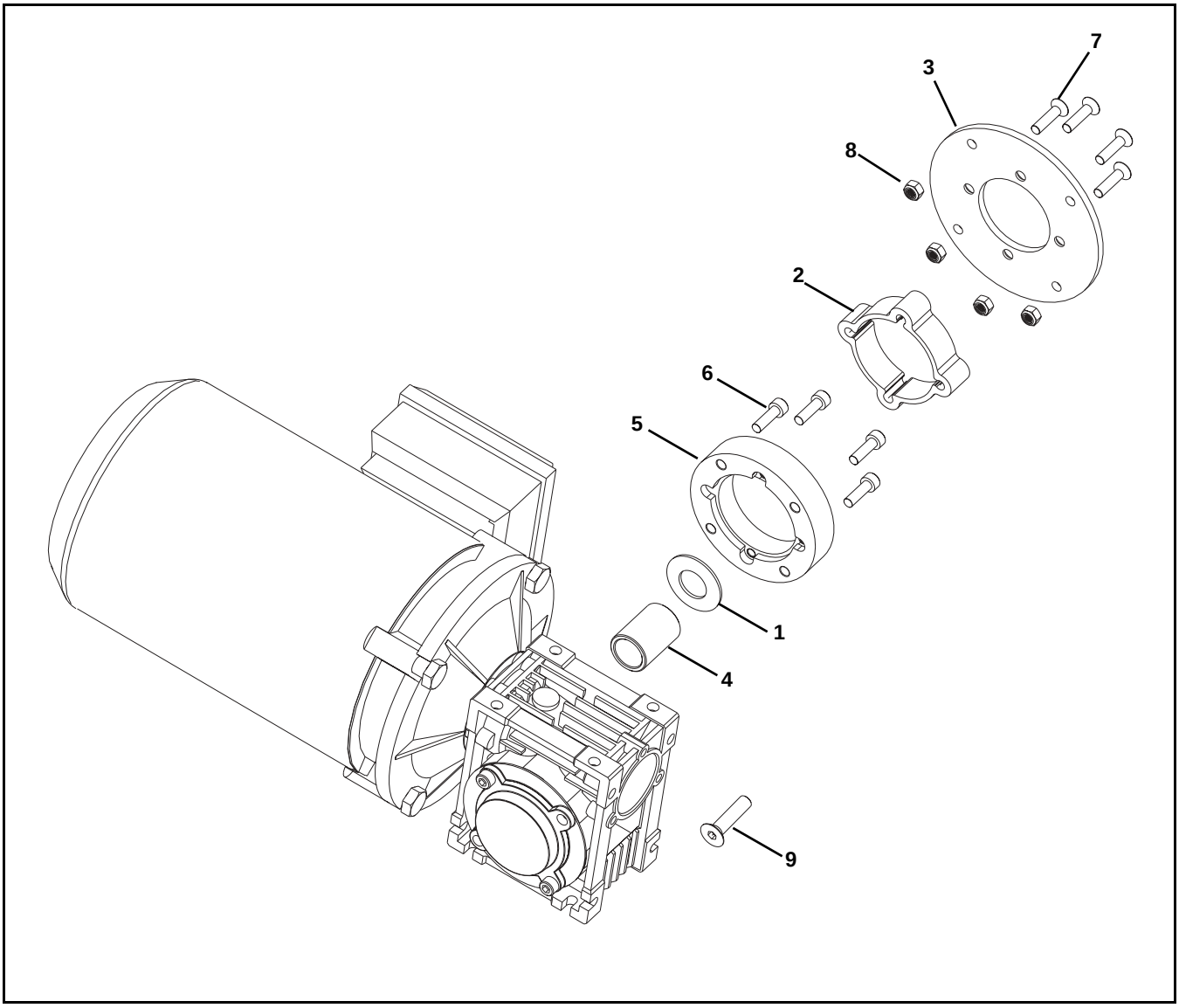

Item	Part Number	Description
1	807-2277	Spring Disc
2	202270-00075	Extrusion
3	202971	Drive Plate
4	203065	Drive Spacer
5	350115	Adapter Ring
6	920620M	Socket Head Screw, M6-1.00 x 20 mm
7	930625M	Flat Head Screw, M6-1.00 x 25 mm
8	990602M	Hex Nut, M6-1.00
9	931025M	Flat Head Screw, M10-1.50 x 25 mm

SEW Gearmotor Mounting Package

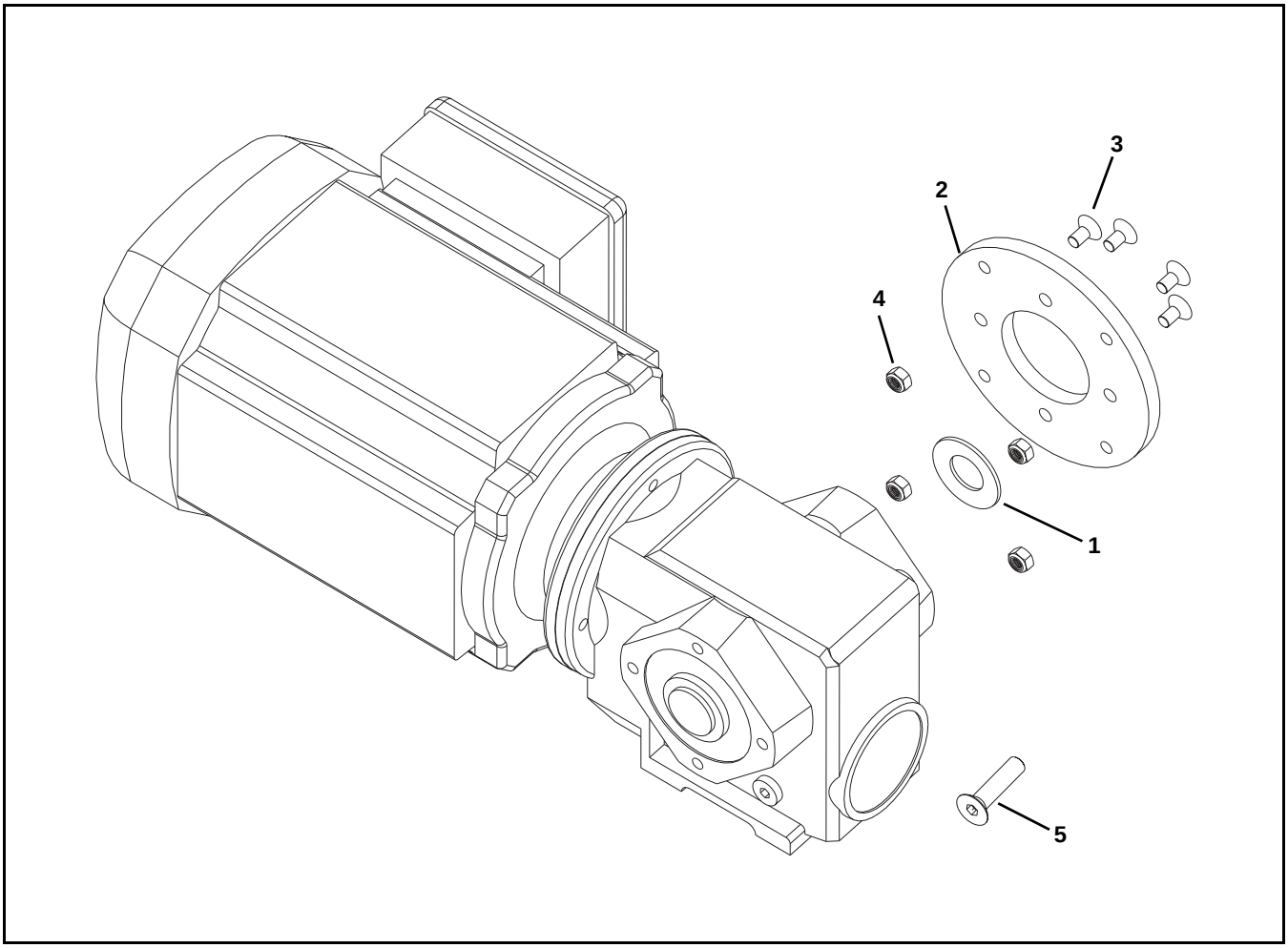

Item	Part Number	Description
1	807-2277	Spring Disc
2	203043	Drive Plate
3	930612M	Flat Head Screw, M6-1.00 x 12 mm
4	990602M	Hex Nut, M6-1.00
5	931025M	Flat Head Screw, M10-1.50 x 25 mm

90° SEW Gearmotors

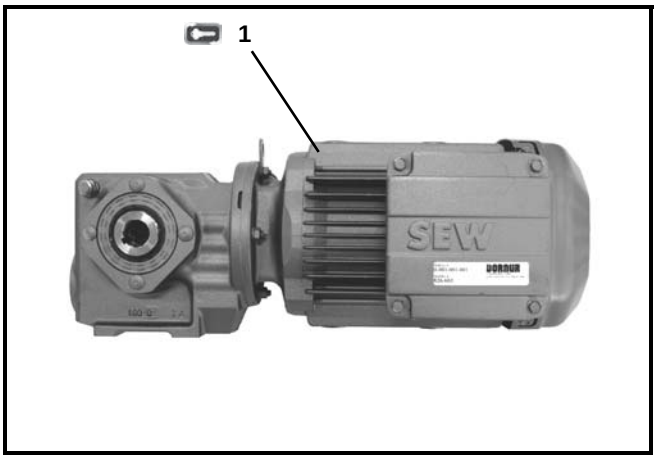

Item	Part Number	Description
1	32M038WS423EN	Gearmotor, 0.80 Hp (0.37 Kw), 230/460 Volts, 37.7:1
	32M013WS423EN	Gearmotor, 0.75 Hp (0.56 Kw), 230/460 Volts, 13.4:1
	32M007WS423EN	Gearmotor, 1.00 Hp (0.75 Kw), 230/460 Volts, 6.8:1

90° Industrial Gearmotors

U.S. Version

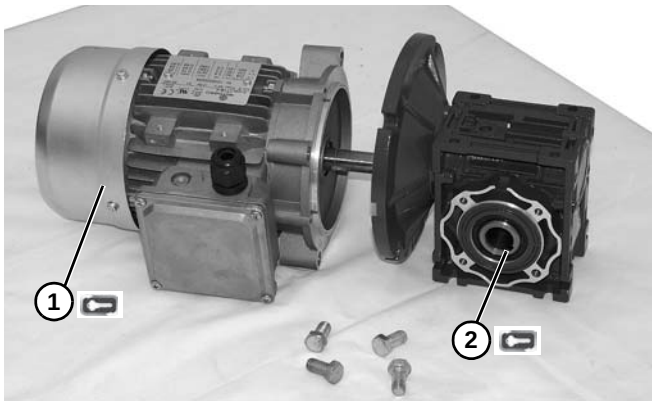

Item	Part No.	Description
1	62MES411FN	Motor, 0.25hp (0.19Kw), 115/230 Volts, 60 Hz, 1-Phase
	62MES423FN	Motor, 0.25hp (0.19Kw), 208–230/460 Volts, 60 Hz, 3-Phase
	22MSD3DEN	Motor, 0.25hp (0.19Kw), 130 VDC
	62MEH411FN	Motor, 0.5hp (0.37Kw), 115/230 Volts, 60Hz, 1–Phase
	32MES423FN	Motor, 0.5hp (0.37Kw) 208–230/460 Volts, 60Hz, 3 Phase
	62MHD9DEN	Motor, 0.5hp (0.37Kw), 90 VDC
	32MES423EN	Motor, 0.5hp (0.37Kw), 230 Volts, 3 Phase Inverter Duty
	32MHD9DEN	Motor, 0.75 hp, (0.56Kw), 90 VDC
2	32M005EL	Gear Reducer, 5:1, NEMA 42CZ
	32M010EL	Gear Reducer, 10:1, NEMA 42CZ
	32M020EL	Gear Reducer, 20:1, NEMA 42CZ
	32M040EL	Gear Reducer, 40:1, NEMA 42CZ
	32M060EL	Gear Reducer, 60:1, NEMA 42CZ
	32M005ES	Gear Reducer, 5:1, NEMA 56C
	32M010ES	Gear Reducer, 10:1, NEMA 56C
	32M020ES	Gear Reducer, 20:1, NEMA 56C
	32M040ES	Gear Reducer, 40:1, NEMA 56C
	32M060ES	Gear Reducer, 60:1, NEMA 56C
	32M010EH	Gear Reducer, 10:1, NEMA 140 TC

CE Version

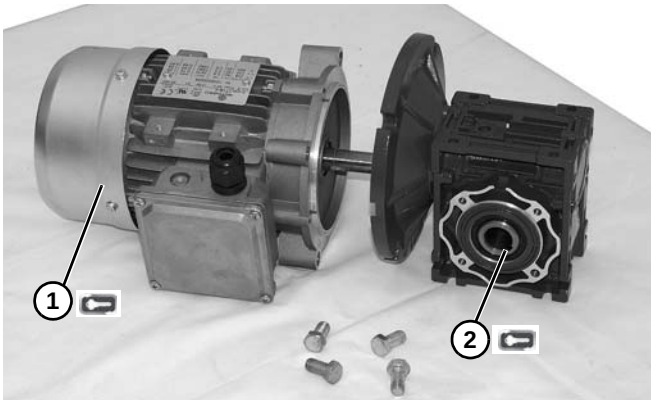

Item	Part No.	Description
1	826-281	Motor, 0.19 kW 230 Volts, 1400 RPM 50 Hz, 1-Phase
	826-282	Motor, 0.37 kW 230 Volts, 1400 RPM 50 Hz, 1-Phase
	826-284	Motor, 0.19 kW 230/400 Volts, 1400 RPM 50 Hz, 3-Phase
	826-285	Motor, 0.37 kW 230/400 Volts, 1400 RPM 50 Hz, 3-Phase
2	62Z005ES	Gear Reducer, 5:1, 63 B5
	62Z010ES	Gear Reducer, 10:1, 63 B5
	62Z020ES	Gear Reducer, 20:1, 63 B5
	62Z040ES	Gear Reducer, 40:1, 63 B5
	62Z060ES	Gear Reducer, 60:1, 63 B5
	32Z005ES	Gear Reducer, 5:1, 71 B5
	32Z010ES	Gear Reducer, 10:1, 71 B5
	32Z020ES	Gear Reducer, 20:1, 71 B5

Ordering a Replacement Chain

Determine the length of the chain required for the conveyor and round up to the next foot length. Order the proper number of chain repair kits (1' long each) for your conveyor. Dorner will ship chain kits that are of reasonable length fully assembled.

Example:

Overall chain length = 42' 5" (round up to 43')

Order Qty (43) of 834-0 W T

W = Width (2=65, 4=105 & 6=150 width conveyors)

T = Chain type (2=Low Friction, 3=Friction Insert Chains)

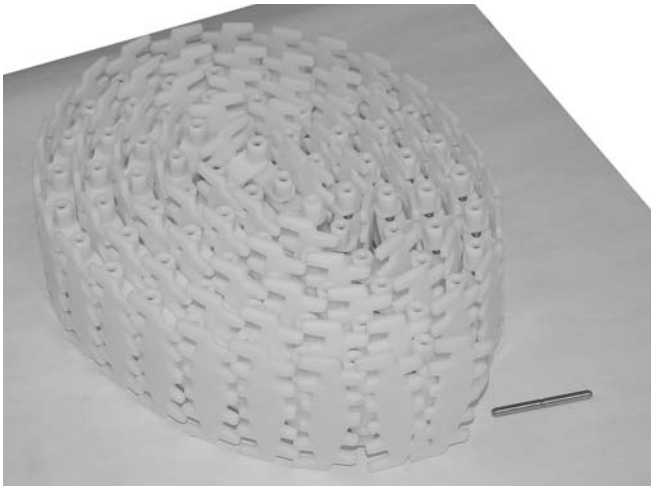

Item	Part Number	Description
1	834-0WT	Chain Repair Kit (Includes 1 ft (305 mm) of chain and assembly pins)
W = Width (2=65, 4=105 & 6=150 width conveyors)		
T = Chain type (2=Low Friction, 3=Friction Insert Chains)		

Belt Removal Tool

Item	Part Number	Description
1	203480	Belt Removal Tool

Notes

Return Policy

Returns must have prior written factory authorization or they will not be accepted. Items that are returned to Dorner without authorization will not be credited nor returned to the original sender. When calling for authorization, please have the following information ready for the Dorner factory representative or your local distributor:

1. Name and address of customer.
2. Dorner part number(s) of item(s) being returned.
3. Reason for return.
4. Customer's original order number used when ordering the item(s).
5. Dorner or distributor invoice number (if available, part serial number).

A representative will discuss action to be taken on the returned items and provide a Returned Goods Authorization (RMA) number for reference. RMA will automatically close 30 days after being issued. To get credit, items must be new and undamaged. There will be a return charge on all items returned for credit, where Dorner was not at fault. It is the customer's responsibility to prevent damage during return shipping. Damaged or modified items will not be accepted. The customer is responsible for return freight.

<table>
<tr><th></th><th colspan="9">Product Type</th></tr>
<tr><th></th><th colspan="8">Standard Products</th><th>Engineered to order parts</th></tr>
<tr><th>Product Line</th><th>Conveyors</th><th>Gearmotors & Mounting Packages</th><th>Support Stands</th><th>Accessories</th><th>Spare Parts (non-belt)</th><th>Spare Belts - Standard Flat Fabric</th><th>Spare Belts - Cleated & Specialty Fabric</th><th>Spare Belts - Plastic Chain</th><th>All equipment and parts</th></tr>
<tr><td>1100</td><td colspan="6" rowspan="13">30% return fee for all products except:
50% return fee for conveyors with modular belt, cleated belt or specialty belts</td><td colspan="2" rowspan="13">non-returnable</td><td rowspan="13">case-by-case</td></tr>
<tr><td>2200</td></tr>
<tr><td>2200 Modular Belt</td></tr>
<tr><td>2200 Precision Move</td></tr>
<tr><td>2300</td></tr>
<tr><td>2300 Modular Belt</td></tr>
<tr><td>3200</td></tr>
<tr><td>3200 LPZ</td></tr>
<tr><td>3200 Precision Move</td></tr>
<tr><td>4100</td></tr>
<tr><td>5200</td></tr>
<tr><td>5300</td></tr>
<tr><td>6200</td></tr>
<tr><td>Controls</td></tr>
<tr><td>7200 / 7300</td><td colspan="6">50% return fee for all products</td></tr>
<tr><td>7350</td><td colspan="9" rowspan="4">non-returnable</td></tr>
<tr><td>7360</td></tr>
<tr><td>7400</td></tr>
<tr><td>7600</td></tr>
</table>

Returns will not be accepted after 60 days from original invoice date. The return charge covers inspection, cleaning, disassembly, disposal and reissuing of components to inventory. If a replacement is needed prior to evaluation of returned item, a purchase order must be issued. Credit (if any) is issued only after return and evaluation is complete.

Dorner has representatives throughout the world. Contact Dorner for the name of your local representative. Our Customer Service Team will gladly help with your questions on Dorner products.

For a copy of Dorner's Warranty, contact factory, distributor, service center or visit our website at www.dorner.com.

For replacement parts, contact an authorized Dorner Service Center or the factory.

Dorner Mfg. Corp. reserves the right to change or discontinue products without notice. All products and services are covered in accordance with our standard warranty. All rights reserved. © Dorner Mfg. Corp. 2013

DORNER MFG. CORP.
975 Cottonwood Ave., PO Box 20
Hartland, WI 53029-0020 USA
TEL 1-800-397-8664 (USA)
FAX 1-800-369-2440 (USA)
Internet: www.dorner.com

Outside the USA:
TEL 1-262-367-7600
FAX 1-262-367-5827