Fixed and Adjustable Height Stands

Installation, Maintenance & Parts Manual

DORNER MFG. CORP.
P.O. Box 20 • 975 Cottonwood Ave.
Hartland, WI 53029-0020 USA

INSIDE THE USA
TEL: 1-800-397-8664
FAX: 1-800-369-2440

OUTSIDE THE USA
TEL: 262-367-7600
FAX: 262-367-5827

For other service manuals visit our website at:
www.dorner.com/service_manuals.asp

851-558 Rev. C

Table of Contents

Introduction 2
Warnings - General Safety 3
Product Description 4
Specifications 4
Installation 5
Recommended Installation Sequence 5
Assembly 5
Stands Shipped Partially Assembled 5
Required Tools 5
Stands Shipped Fully Assembled 7
Required Tools 7
Optional Fine Adjustment Kit 8
Required Tools 8
Optional Caster Kit 9
Required Tools 9
Preventive Maintenance and Adjustment 10
Stand Height Adjustment 10
Height Adjustment for Fixed and Adjustable Height Stands 10
Required Tools 10
Height Adjustment for Fixed and Adjustable Height Stands with Fine Adjustment Kit 10
Required Tools 10
Conveyor Angle Adjustment 11
Required Tools 11
Service Parts 12
Fixed Height Stand w/Feet or Casters 12
Adjustable Height Stand w/Feet or Casters 15
Tall Stand with Feet or Casters 17
Optional Fine Adjustment Kit 19
Return Policy 20

Introduction

IMPORTANT

Some illustrations may show guards removed. DO NOT operate equipment without guards.

Upon receipt of shipment:

- Compare shipment with packing slip. Contact factory regarding discrepancies.
- Inspect packages for shipping damage. Contact carrier regarding damage.
- Accessories may be shipped loose. See accessory instructions for installation.

Dorner's Limited Warranty applies.

Dorner reserves the right to make changes at any time without notice or obligation.

⚠ WARNING

The safety alert symbol, black triangle with white exclamation, is used to alert you to potential personal injury hazards.

⚠ DANGER

Climbing, sitting, walking or riding on conveyor will cause severe injury.

KEEP OFF CONVEYORS.

⚠ DANGER

DO NOT OPERATE CONVEYORS IN AN EXPLOSIVE ENVIRONMENT.

⚠ DANGER

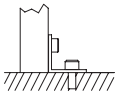

Supports marked with this symbol must be anchored to the floor. Supports not anchored to floor will tip, causing severe injury or death.

SUPPORT MUST BE ANCHORED TO FLOOR.

⚠ WARNING

Exposed moving parts can cause severe injury.

LOCK OUT POWER before removing guards or performing maintenance.

⚠ WARNING

Loosening stand height or angle adjustment screws may cause conveyor sections to drop down, causing severe injury.

SUPPORT CONVEYOR SECTIONS PRIOR TO LOOSENING STAND HEIGHT OR ANGLE ADJUSTMENT SCREWS.

⚠ WARNING

Dorner cannot control the physical installation and application of conveyors. Taking protective measures is the responsibility of the user.

When conveyors are used in conjunction with other equipment or as part of a multiple conveyor system, CHECK FOR POTENTIAL PINCH POINTS and other mechanical hazards before system start-up.

Product Description

Refer to Figure 1 for typical stand components.

A	Support Stand
B	Stand Mounting Bracket (with conveyor)
C	Boot
D	Height Adjustment Point
E	Angle Adjustment Point
F	Optional Casters
G	Optional Diagonal Brace

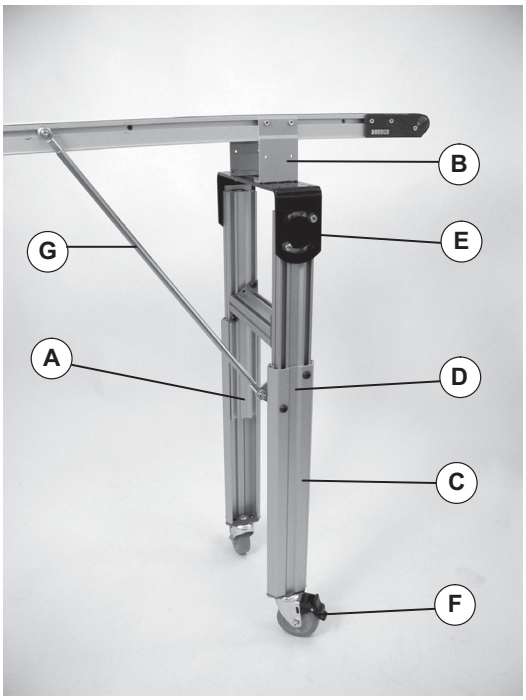

Figure 1

Specifications

Fixed and Adjustable Stand Models

39 M TT WW – HH HH F A

- **Assembly**
  - **P = Partially Assembled**
  - **A = Fully Asembled**
- **Floor Interface**
  - **F = Fixed Foot Pad**
  - **C = Total Lock Swivel Caster**
- **Max Height**
  - **From Floor to Top Bracket**
- **Min Height**
  - **From Floor to Top Bracket**
- **Width**
  - **02” to 48”**
- **Stand Type**
  - **FH = Fixed Height**
  - **AH = Adjustable Height**
  - **FT = Tall, Fixed Height**
  - **AT = Tall, Adjustable Height**
- **Language Code**
  - **M = U.S. English**
- **H Style Stand**

Example: 39MFH12–3248FP

Fixed height, H style stand for a 12” wide conveyor with a min height of 32” and a max height of 48” with fixed foot pads. It comes partially assembled and has U.S. English documentation.

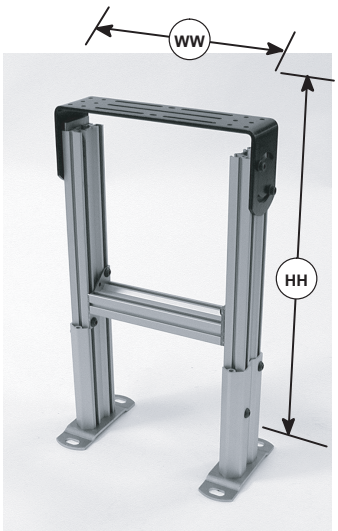

⚠ DANGER

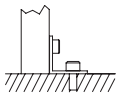

Supports marked with this symbol must be anchored to the floor. Supports not anchored to floor will tip, causing severe injury or death.

SUPPORT MUST BE ANCHORED TO FLOOR.

⚠ WARNING

Exposed moving parts can cause severe injury.

LOCK OUT POWER before removing guards or performing maintenance.

Recommended Installation Sequence (see Table of Contents for page numbers)

- Assemble stand(s), if required
- Attach stand(s) to conveyor (see Conveyor Installation, Maintenance & Parts Manual)
- Attach optional diagonal bracing (see Diagonal Brace Kit Manual)
- Adjust stand height and level (see Adjustment section, page 10)

Assembly

Stands Shipped Partially Assembled

Required Tools

- 6 mm Hex Key Wrench

Typical Components:

H	Boots/Foot Plate Assembly (2x)
I	Hardware Pack, Standard Stand
J	Conveyor Mounting Bracket(s) (2 possible configurations)
K	Vertical Stand Legs (2x)
L	Hardware Pack, Crossmember (quantity as required)
M	Crossmembers (quantity as required)
N	U–nuts (2x)

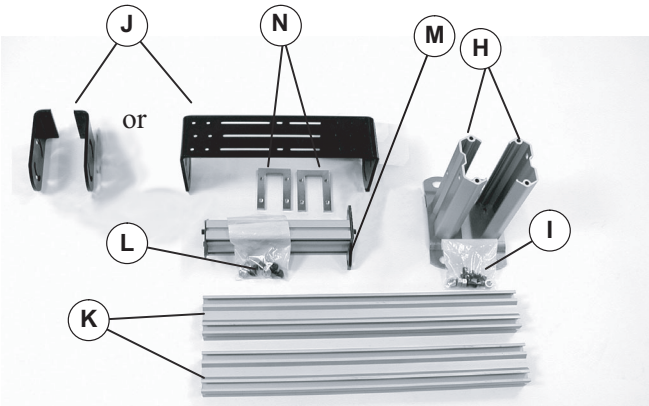

Figure 2

1. Open standard stand hardware pack (Figure 2, item I).

NOTE

Stand legs (Figure 3, item K) are equipped with a height sticker (P). Assemble stand legs with the sticker on the outside and the red warning area (O) at the bottom of the legs.

Shown assembled. See steps 7 and 8 for boot assembly.

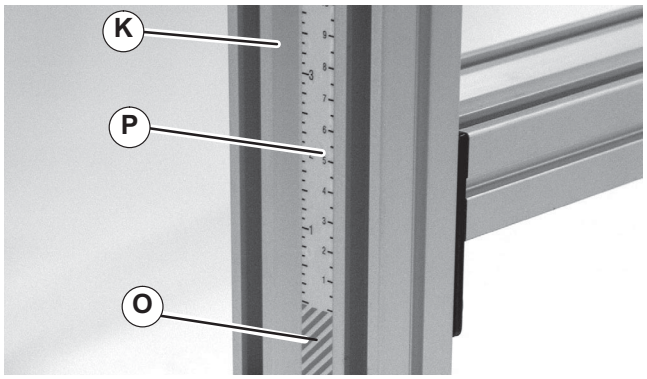

Figure 3

2. On the side opposite height sticker (Figure 3, item P) install one (1) hex nut (Figure 4, item Q) into each inside stand leg (K) t–slot.

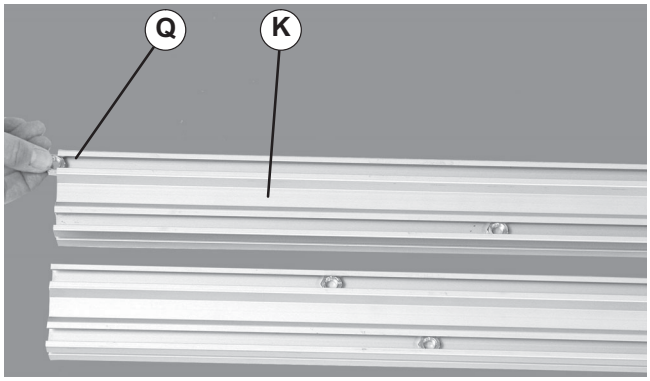

Figure 4

3. Attach crossmember (Figure 5, item M) to stand leg (K) with button screws (R). Do not tighten.

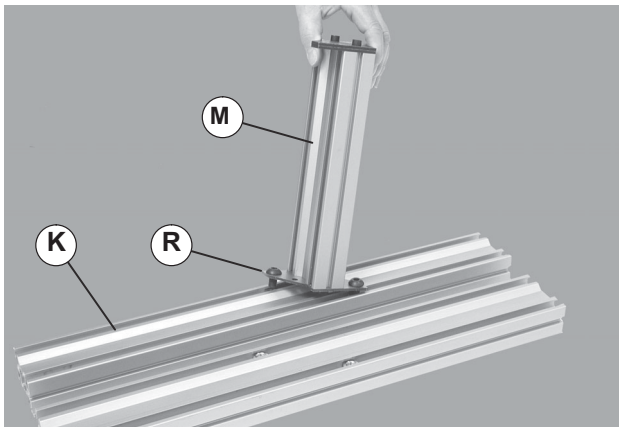

Figure 5

4. Repeat step 4 for opposite stand leg. Make sure to locate the red warning area (Figure 3, item P) on the same ends of stand legs (Figure 5, item K).

⚠ WARNING

Failure to secure screws (Figure 6, item R) may cause conveyor sections to drop down causing severe injury.

TIGHTEN SCREWS (R) AFTER ADJUSTMENT.

5. Upright stand and locate and space crossmember(s) (Figure 6, item M) evenly along stand leg (K). Tighten crossmember button screws (R) to 150 in–lb (17 N–m).

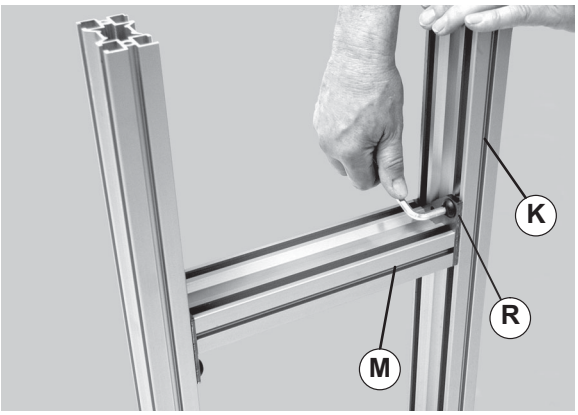

Figure 6

6. On the end with red warning area (Figure 7, item O) install one (1) hex nut (Q) into each outside stand leg (K) t–slot.

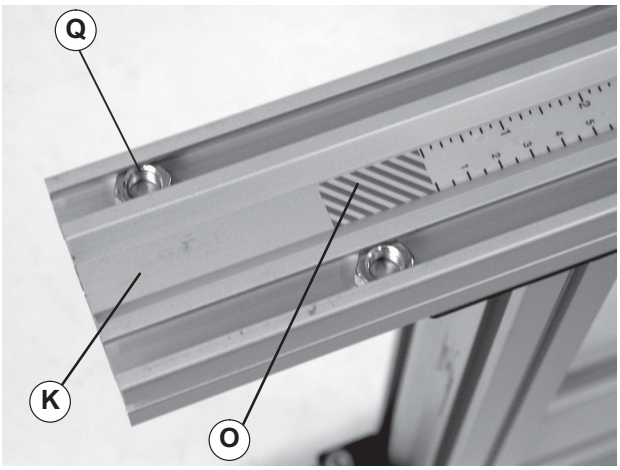

Figure 7

⚠ WARNING

Failure to secure screws (Figure 8, item R) may cause conveyor sections to drop down causing severe injury.

TIGHTEN SCREWS (R) AFTER ADJUSTMENT.

7. Slide boot (Figure 8, item H) onto stand leg (K). Align hex nuts (Q) and boot holes and attach boot with button screws (R). Tighten button screws to 150 in–lb (17 N–m). Repeat for opposite leg.

IMPORTANT

Red warning area (Figure 8, item O) must be under boot (H) after assembly.

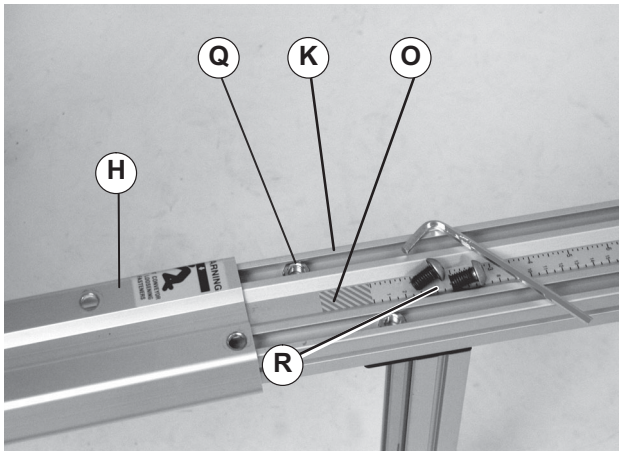

Figure 8

8. Install u–nuts (Figure 9, item N) into outer t–slots of stand legs (K).

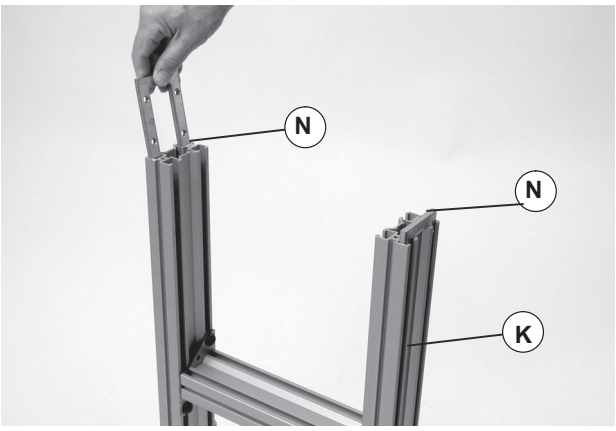

Figure 9

⚠ WARNING

Failure to secure screws (Figure 10, item S) may cause conveyor sections to drop down causing severe injury.

TIGHTEN SCREWS (S) AFTER ADJUSTMENT.

9. Align conveyor mounting bracket (Figure 10, item J) with u–nuts. Attach flange socket screws (S) through bracket and into u–nuts. Tighten flange socket screws (S) to 150 in–lb (17 N–m).

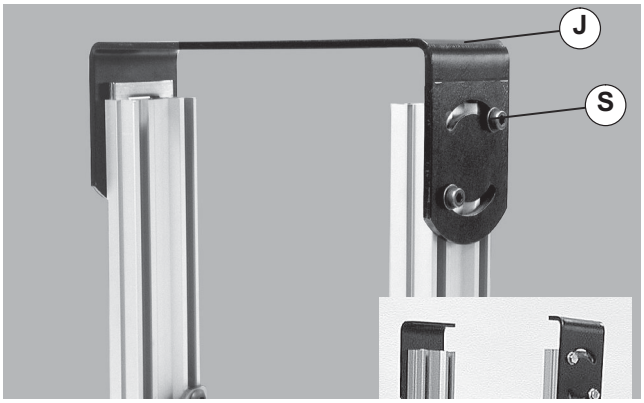

Figure 10

10. For leveling and height adjustment see page 10.

Stands Shipped Fully Assembled

Required Tools

- 6 mm Hex Key Wrench

Typical Components:

T	Stand Assembly
H	Boot Assembly (2x)

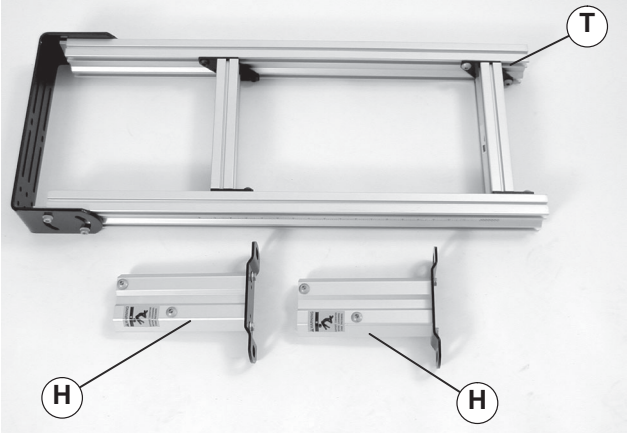

Figure 11

1. Loosen (2) hex nuts (Figure 12, item Q) located on boot assembly (H).

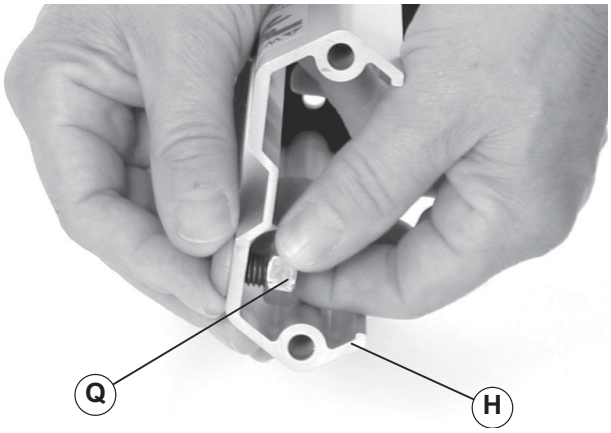

Figure 12

⚠ WARNING

Failure to secure screws (Figure 13, item R) may cause conveyor sections to drop down causing severe injury.

TIGHTEN SCREWS (R) AFTER ADJUSTMENT.

2. Slide (2) hex nuts (Figure 13, item Q) along with boot assembly (H) into outer slots of stand assembly (T). Tighten button screw (R) to 150 in–lb (17 N–m).

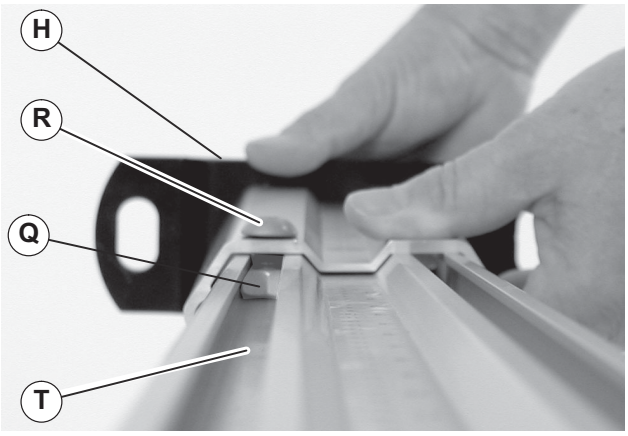

Figure 13

3. Repeat steps 1 and 2 for opposite stand leg.

Optional Fine Adjustment Kit

Required Tools

- 6 mm Hex Key Wrench

Typical Components:

U	Adjustment Kit (2x)

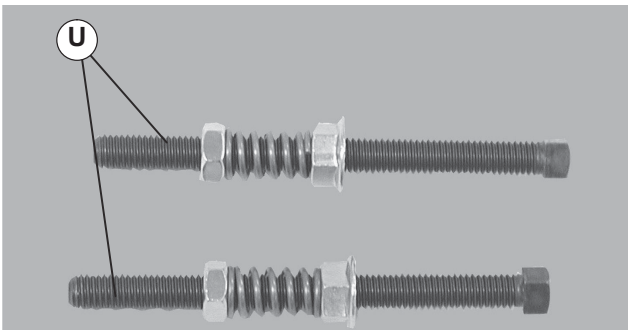

Figure 14

1. Loosen stand boot screws (Figure 15, item R).

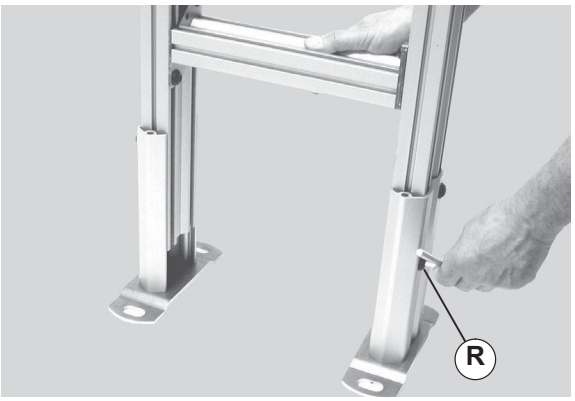

Figure 15

2. Raise stand leg (Figure 16, item K) until it is above fine adjustment bolt assembly (U). Insert fine adjustment kit (U) into stand leg (K).

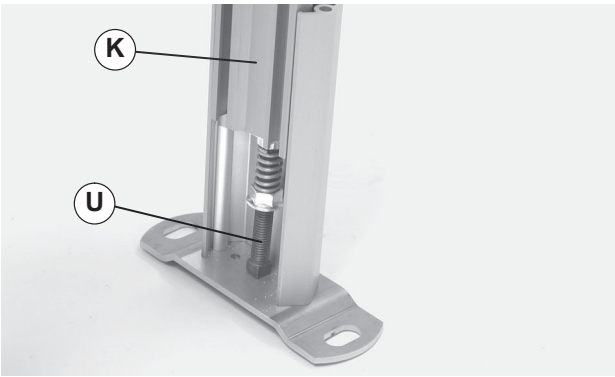

Figure 16

3. Lower stand leg (Figure 17, item K) until stand edge (V) is resting on lower nut (W) flange.

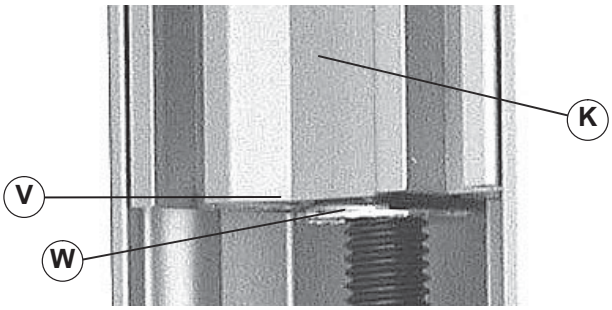

Figure 17

⚠ WARNING

Failure to secure screws (Figure 15, item R) may cause conveyor sections to drop down causing severe injury.

TIGHTEN SCREWS (R) AFTER ADJUSTMENT.

4. Tighten stand button screws (Figure 15, item R) to 150 in–lb (17 N–m).
5. Repeat steps 1 through 4 for opposite stand leg.
6. For leveling and height adjustment see page 10.

Optional Caster Kit

Required Tools

- 17 mm Open End Wrench

Typical Components:

X	Caster (2x)
Y	Carriage Bolt (2x)
Z	Nut (2x)

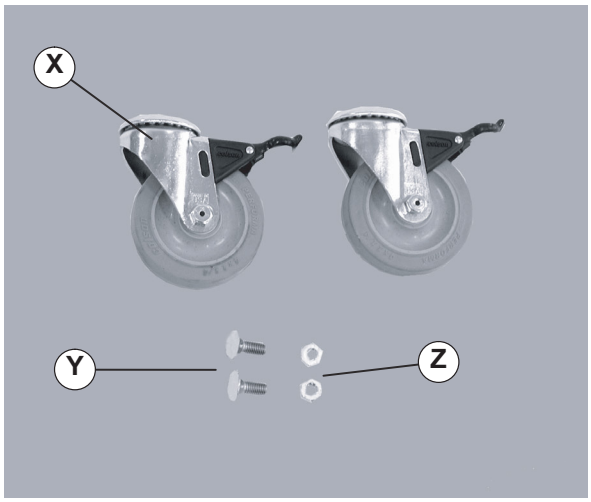

Figure 18

1. Install carriage bolt (Figure 19, item Y) into stand boot base plate (AA).

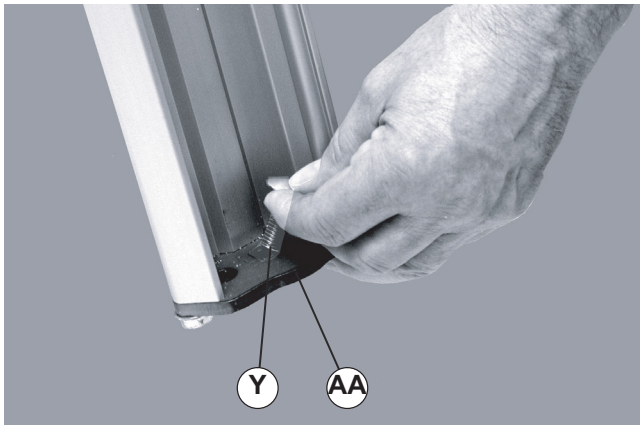

Figure 19

2. Install caster (Figure 20, item X) over carriage bolt (Figure 19, item Y).
3. Place nut (Figure 20, item Z) on carriage bolt. Tighten nut to 177 in–lb (20 N–m).

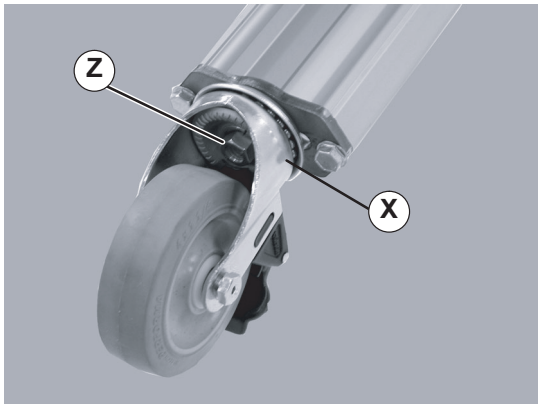

Figure 20

4. Repeat steps 1 through 3 for opposite leg.

Stand Height Adjustment

Height Adjustment for Fixed and Adjustable Height Stands

Required Tools

- 6 mm Hex Key Wrench

⚠ WARNING

Exposed moving parts can cause severe injury.

LOCK OUT POWER before removing guards or performing maintenance.

⚠ WARNING

Loosening stand height or angle adjustment screws may cause conveyor sections to drop down, causing severe injury.

SUPPORT CONVEYOR SECTIONS PRIOR TO LOOSENING STAND HEIGHT OR ANGLE ADJUSTMENT SCREWS.

1. Using a support (Figure 21, item AB), raise conveyor and stand off the floor.

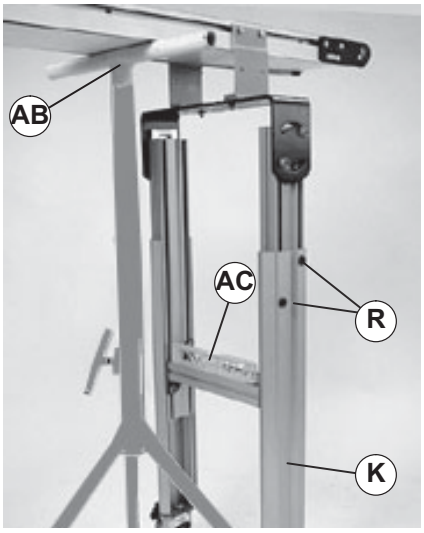

Figure 21

2. Loosen button screws (R).
3. Raise or lower stand leg (K) to the required height. Level stand from side to side using a level (AC).

⚠ WARNING

Failure to secure screws (Figure 21, item R) may cause conveyor sections to drop down causing severe injury.

TIGHTEN SCREWS (R) AFTER ADJUSTMENT.

4. Tighten button screws (R) to 150 in–lb (17 N–m).
5. Repeat steps 2 through 4 on opposite stand leg.

Height Adjustment for Fixed and Adjustable Height Stands with Fine Adjustment Kit

Required Tools

- 6 mm Hex Key Wrench
- 13 mm Open End Wrench

⚠ WARNING

Exposed moving parts can cause severe injury.

LOCK OUT POWER before removing guards or performing maintenance.

⚠ WARNING

Loosening stand height or angle adjustment screws may cause conveyor sections to drop down, causing severe injury.

SUPPORT CONVEYOR SECTIONS PRIOR TO LOOSENING STAND HEIGHT OR ANGLE ADJUSTMENT SCREWS.

1. Loosen boot screws (Figure 21, item R).
2. Turn kit bolt (Figure 22, item AD) to required height.

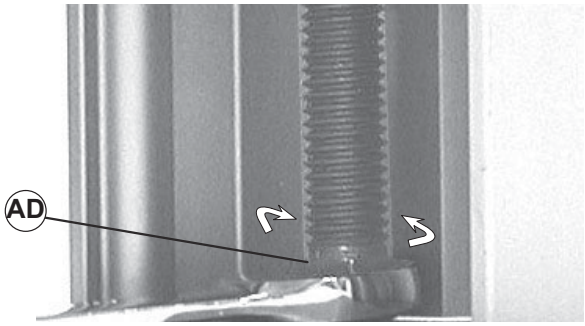

Figure 22

⚠ WARNING

Failure to secure screws (Figure 21, item R) may cause conveyor sections to drop down causing severe injury.

TIGHTEN SCREWS (R) AFTER ADJUSTMENT.

3. Tighten button screws (Figure 21, item R) to 150 in–lb (17 N–m).
4. Repeat steps 1 through 3 on opposite Adjustment Kit.

Conveyor Angle Adjustment

Required Tools

- 6 mm Hex Key Wrench

⚠ WARNING

Loosening stand height or angle adjustment screws may cause conveyor sections to drop down, causing severe injury.

SUPPORT CONVEYOR SECTIONS PRIOR TO LOOSENING STAND HEIGHT OR ANGLE ADJUSTMENT SCREWS.

NOTE

To rotate stand top plate, screws (Figure 23, item S) may need to be re-located to other t–slots (AE).

1. Loosen flange socket screws (Figure 23, item S) on both sides of stand.

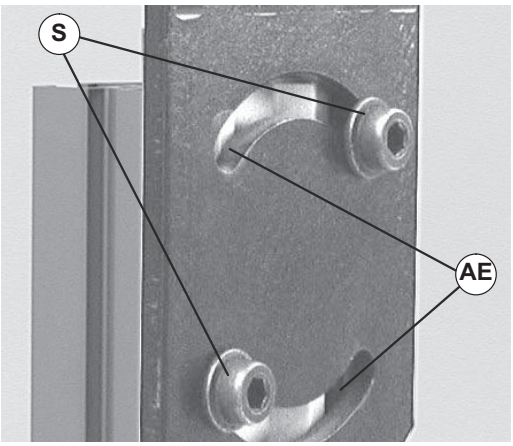

Figure 23

2. Adjust conveyor to desired angle.

⚠ WARNING

Failure to secure screws (Figure 23, item S) may cause conveyor sections to drop down, causing severe injury.

TIGHTEN SCREWS (S) AFTER ADJUSTMENT.

3. Secure flange socket screws (Figure 23, item S) to 24 ft-lb (18 Nm).
4. If conveyor is equipped with diagonal bracing (Figure 24, item AH), socket screw (AI) must be loosened to adjust conveyor angle. Secure screw to 100 in–lb (11 N–m) after adjustment.

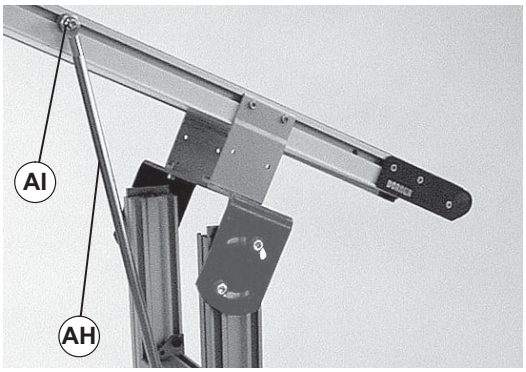

Figure 24

Service Parts

NOTE
For replacement parts other than those shown in this section, contact an authorized Dorner Service Center or the factory. Key Service Parts and Kits are identified by the Performance Parts Kits logo . Dorner recommends keeping these parts on hand.

Fixed Height Stand w/Feet or Casters

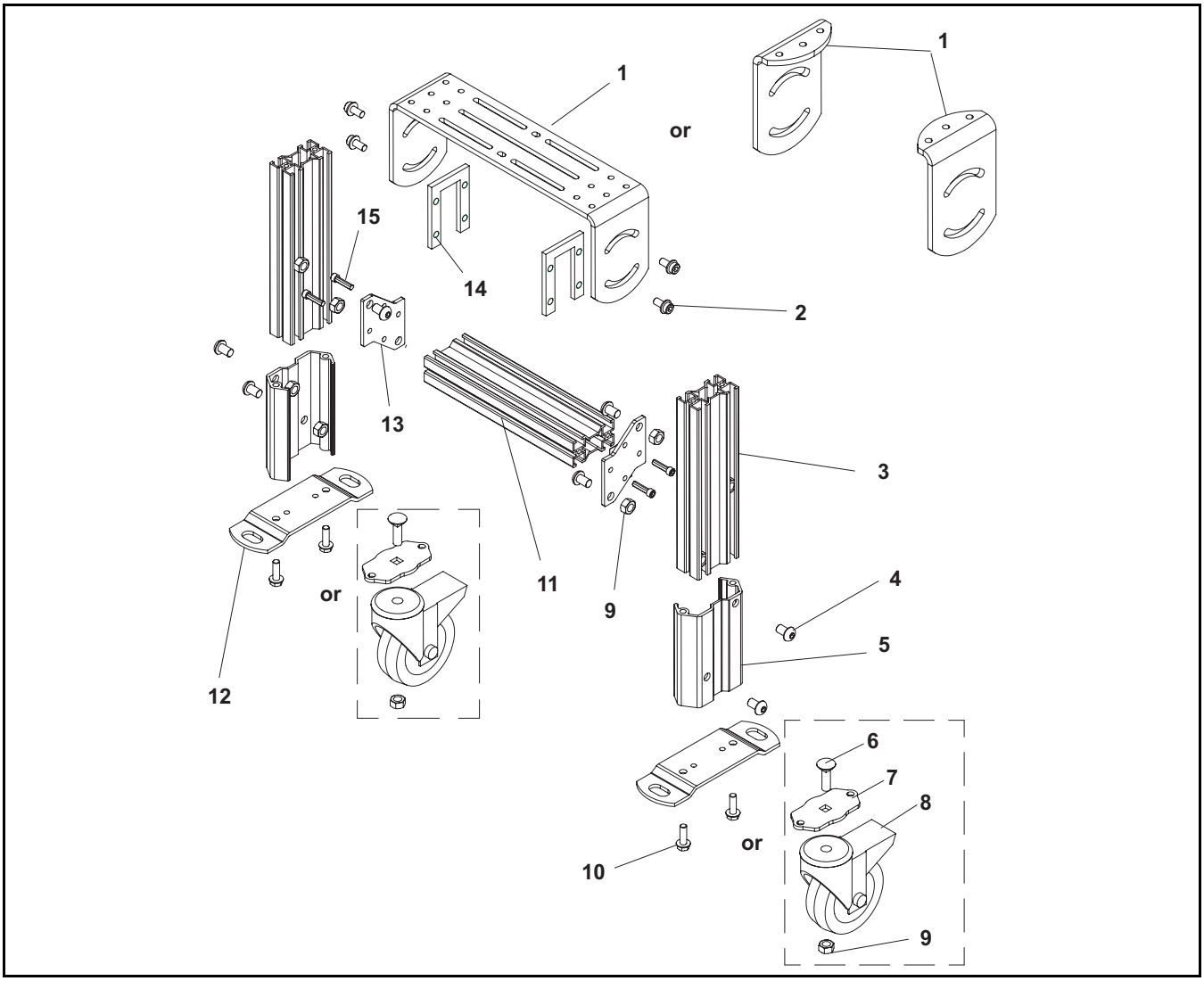

Item	Part Number	Description
1	202148	Bracket, Mtg. 12” (305mm) and under (1x)
	200697	Bracket, Mtg. 14” (357mm) and over (2x)
2	920883M	Scr, Flange, Socket M8–1.25x16MM
3	See Leg Table	Leg, Stand
4	911016M	Scr, Bttn, Metric M10–1.50x16MM
5	710031–00816	Boot, Stand Leg
6	807–1286	Bolt, Carriage M10–1.5x25MM
7	710005	Plate, Caster Mtg. Stand
8	807–640	Caster, 4”
9	991001M	Nut, Hex, Full M10–1.50
10	960897M	Scr, Hex Hd, Metric M8–1.25x30MM

Item	Part Number	Description
11	See Crossmember Table	Crossmember
12	710004	Foot, Stand, Floor Mtg
13	710006	Plate, End, Crossmember Stand
14	200801M	Nut, Quad, M8–1.25
15	708180P	Scr, Sock, Metric M6–1.00x25MM

Item 3: Leg Table (With Foot)	
Leg Height Range	**Leg Part Number**
15”–19” (381mm–483mm)	710211–01263
16”–20” (406mm–508mm)	710211–01363
17”–21” (432mm–533mm)	710211–01463
18”–22” (457mm–559mm)	710211–01563
19”–23” (483mm–584mm)	710211–01663
20”–24” (508mm–610mm)	710211–01763
21”–25” (533mm–635mm)	710211–01863
22”–26” (559mm–660mm)	710211–01963
23”–27” (584mm–686mm)	710211–02063
24”–28” (610mm–711mm)	710211–02163
25”–29” (635mm–737mm)	710211–02263
26”–30” (660mm–762mm)	710211–02363
27”–31” (686mm–787mm)	710211–02463
28”–32” (711mm–813mm)	710211–02563
29”–33” (737mm–838mm)	710211–02663
30”–34” (762mm–864mm)	710211–02763
31”–35” (787mm–889mm)	710211–02863
32”–36” (813mm–914mm)	710211–02963
33”–37” (838mm–940mm)	710211–03063
34”–38” (864mm–965mm)	710211–03163
35”–39” (889mm–991mm)	710211–03263
36”–40” (914mm–1016mm)	710211–03363
37”–41” (940mm–1041mm)	710211–03463
38”–42” (965mm–1067mm)	710211–03563
39”–43” (991mm–1092mm)	710211–03663
40”–44” (1016mm–1118mm)	710211–03763
41”–45” (1041mm–1143mm)	710211–03863
42”–46” (1067mm–1168mm)	710211–03963
43”–47” (1092mm–1194mm)	710211–04063
44”–48” (1118mm–1219mm)	710211–04163
45”–49” (1143mm–1245mm)	710211–04263
46”–50” (1168mm–1270mm)	710211–04363
47”–51” (1194mm–1295mm)	710211–04463
48”–52” (1219mm–1321mm)	710211–04563
49”–53” (1245mm–1346mm)	710211–04663
50”–54” (1270mm–1372mm)	710211–04763
51”–55” (1295mm–1397mm)	710211–04863
52”–56” (1321mm–1422mm)	710211–04963
53”–57” (1346mm–1448mm)	710211–05063
54”–58” (1372mm–1473mm)	710211–05163
55”–59” (1397mm–1499mm)	710211–05263
56”–60” (1422mm–1524mm)	710211–05363
57”–61” (1448mm–1549mm)	710211–05463
58”–62” (1473mm–1575mm)	710211–05563
59”–63” (1499mm–1600mm)	710211–05663
60”–64” (1524mm–1626mm)	710211–05763
61”–65” (1549mm–1651mm)	710211–05863
62”–66” (1575mm–1676mm)	710211–05963
63”–67” (1600mm–1702mm)	710211–06063
64”–68” (1626mm–1727mm)	710211–06163
65”–69” (1651mm–1753mm)	710211–06263
66”–70” (1676mm–1778mm)	710211–06363
67”–71” (1702mm–1803mm)	710211–06463
68”–72” (1727mm–1829mm)	710211–06563
69”–73” (1753mm–1854mm)	710211–06663

Item 3: Leg Table (With Foot)	
Leg Height Range	**Leg Part Number**
70”–74” (1778mm–1880mm)	710211–06763
71”–75” (1803mm–1905mm)	710211–06863
72”–76” (1829mm–1930mm)	710211–06963
73”–77” (1854mm–1956mm)	710211–07063
74”–78” (1880mm–1981mm)	710211–07163
75”–79” (1905mm–2007mm)	710211–07263
76”–80” (1930mm–2032mm)	710211–07363
77”–81” (1956mm–2057mm)	710211–07463
78”–82” (1981mm–2083mm)	710211–07563
79”–83” (2007mm–2108mm)	710211–07663
80”–84” (2032mm–2134mm)	710211–07763
81”–85” (2057mm–2159mm)	710211–07863
82”–86” (2083mm–2184mm)	710211–07963
83”–87” (2108mm–2210mm)	710211–08063
84”–88” (2134mm–2235mm)	710211–08163
85”–89” (2159mm–2261mm)	710211–08263
86”–90” (2184mm–2286mm)	710211–08363
87”–91” (2210mm–2311mm)	710211–08463
88”–92” (2235mm–2337mm)	710211–08563
89”–93” (2261mm–2362mm)	710211–08663
90”–94” (2286mm–2388mm)	710211–08763
91”–95” (2311mm–2413mm)	710211–08863
92”–96” (2337mm–2438mm)	710211–08963
93”–97” (2362mm–2464mm)	710211–09063
94”–98” (2388mm–2489mm)	710211–09163
95”–99” (2413mm–2515mm)	710211–09263

Item 3: Leg Table (With Caster)	
Leg Height Range	**Leg Part Number**
20”–24” (508mm–610mm)	710211–01263
21”–25” (533mm–635mm)	710211–01363
22”–26” (559mm–660mm)	710211–01463
23”–27” (584mm–686mm)	710211–01563
24”–28” (610mm–711mm)	710211–01663
25”–29” (635mm–737mm)	710211–01763
26”–30” (660mm–762mm)	710211–01863
27”–31” (686mm–787mm)	710211–01963
28”–32” (711mm–813mm)	710211–02063
29”–33” (737mm–838mm)	710211–02163
30”–34” (762mm–864mm)	710211–02263
31”–35” (787mm–889mm)	710211–02363
32”–36” (813mm–914mm)	710211–02463
33”–37” (838mm–940mm)	710211–02563
34”–38” (864mm–965mm)	710211–02663
35”–39” (889mm–991mm)	710211–02763
36”–40” (914mm–1016mm)	710211–02863
37”–41” (940mm–1041mm)	710211–02963
38”–42” (965mm–1067mm)	710211–03063
39”–43” (991mm–1092mm)	710211–03163
40”–44” (1016mm–1118mm)	710211–03263
41”–45” (1041mm–1143mm)	710211–03363
42”–46” (1067mm–1168mm)	710211–03463
43”–47” (1092mm–1194mm)	710211–03563
44”–48” (1118mm–1219mm)	710211–03663
45”–49” (1143mm–1245mm)	710211–03763
46”–50” (1168mm–1270mm)	710211–03863

Service Parts

Item 3: Leg Table (With Caster)	
Leg Height Range	**Leg Part Number**
47”–51” (1194mm–1295mm)	710211–03963
48”–52” (1219mm–1321mm)	710211–04063
49”–53” (1245mm–1346mm)	710211–04163
50”–54” (1270mm–1372mm)	710211–04263
51”–55” (1295mm–1397mm)	710211–04363
52”–56” (1321mm–1422mm)	710211–04463
53”–57” (1346mm–1448mm)	710211–04563
54”–58” (1372mm–1473mm)	710211–04663
55”–59” (1397mm–1499mm)	710211–04763
56”–60” (1422mm–1524mm)	710211–04863
57”–61” (1448mm–1549mm)	710211–04963
58”–62” (1473mm–1575mm)	710211–05063
59”–63” (1499mm–1600mm)	710211–05163
60”–64” (1524mm–1626mm)	710211–05263
61”–65” (1549mm–1651mm)	710211–05363
62”–66” (1575mm–1676mm)	710211–05463
63”–67” (1600mm–1702mm)	710211–05563
64”–68” (1626mm–1727mm)	710211–05663
65”–69” (1651mm–1753mm)	710211–05763
66”–70” (1676mm–1778mm)	710211–05863
67”–71” (1702mm–1803mm)	710211–05963

Item 11: Crossmember Table	
Stand Width	Crossmember Part Number
2”–12” (51mm–304mm)	710210–00976
14” (357mm)	710210–01176
16” (406mm)	710210–01376
18” (457mm)	710210–01576
20” (508mm)	710210–01776
22” (559mm)	710210–01976
24” (610mm)	710210–02176
26” (661mm)	710210–02376
28” (711mm)	710210–02576
30” (762mm)	710210–02776
32” (813mm)	710210–02976
34” (864mm)	710210–03176
36” (915mm)	710210–03376
38” (966mm)	710210–03576
40” (1016mm)	710210–03776
42” (1067mm)	710210–03976
44” (1118mm)	710210–04176
46” (1169mm)	710210–04376
48” (1220mm)	710210–04576

Adjustable Height Stand w/Feet or Casters

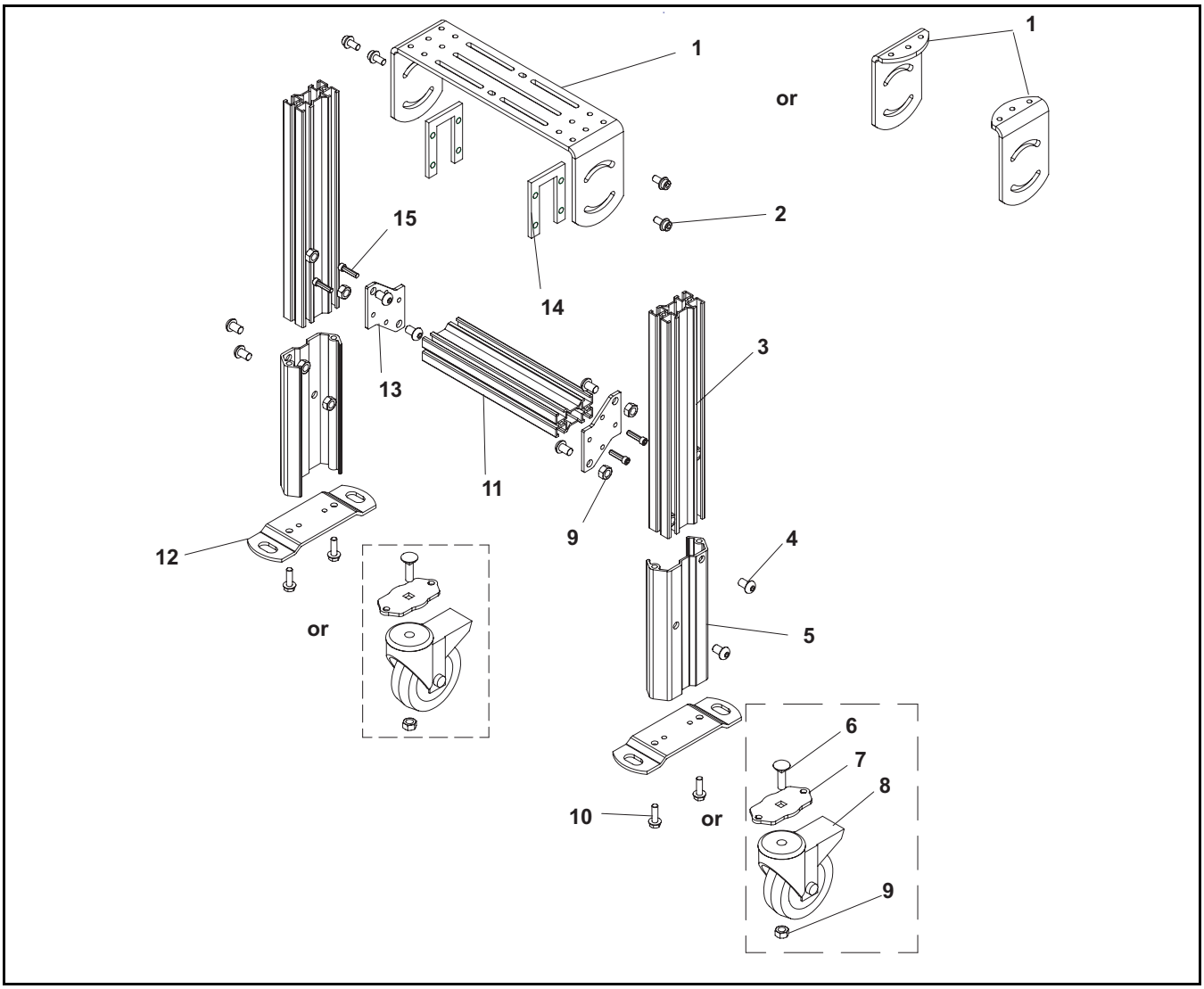

Item	Part Number	Description
1	202148	Bracket, Mtg. 12” (305mm) and under (1x)
	200697	Bracket, Mtg. 14” (357mm) and over (2x)
2	920883M	Scr, Flange, Socket M8–1.25x16MM
3	See Leg/Boot Table	Leg, Stand
4	911016M	Scr, Bttn, Metric M10–1.50x16MM
5	See Leg/Boot Table	Boot, Stand Leg
6	807–1286	Bolt, Carriage M10–1.5x25MM

Item	Part Number	Description
7	710005	Plate, Caster Mtg. Stand
8	807–640	Caster, 4”
9	991001M	Nut, Hex, Full M10–1.50
10	960896M	Scr, Tri–Lobe, HD–Hex M8x25MM
11	See Crossmember Table	Crossmember
12	710004	Foot, Stand, Floor Mtg
13	710006	Plate, End, Crossmember Stand
14	200801M	Nut, Quad, M8–1.25
15	708180P	Scr, Sock, Metric M6–1.00x25MM

Service Parts

Items 3 and 5: Leg/Boot Table (With Foot)		
Stand Height Range	**Leg Part Number (Item 3)**	**Boot Part Number (Item 5)**
12”–13” (305mm–330mm)	710211–00963	710031–00516
13”–15” (330mm–381mm)	710211–01063	710031–00616
14”–17” (356mm–432mm)	710211–01163	710031–00716
16”–21” (406mm–533mm)	710211–01363	710031–00916
19”–26” (483mm–660mm)	710211–01663	710031–01116
24”–36” (610mm–914mm)	710211–02163	710031–01616
30”–48” (762mm–1219mm)	710211–02763	710031–02216
42”–60” (1067mm–1524mm)	710211–03963	710031–02216
54”–72” (1372mm–1829mm)	710211–05163	710031–02216
66”–84” (1676mm–2134mm)	710211–06363	710031–02216
78”–96” (1981mm–2438mm)	710211–07563	710031–02216

Items 3 and 5: Leg/Boot Table (With Caster)		
Stand Height Range	**Leg Part Number (Item 3)**	**Boot Part Number (Item 5)**
17”–18” (432mm–457mm)	710211–00963	710031–00516
18”–20” (457mm–508mm)	710211–01063	710031–00616
19”–22” (483mm–559mm)	710211–01163	710031–00716
21”–26” (533mm–660mm)	710211–01363	710031–00916
24”–31” (610mm–787mm)	710211–01663	710031–01116
29”–41” (737mm–1041mm)	710211–02163	710031–01616
35”–53” (889mm–1346mm)	710211–02763	710031–02216
47”–65” (1194mm–1651mm)	710211–03963	710031–02216
59”–77” (1499mm–1956mm)	710211–05163	710031–02216
71”–89” (1803mm–2261mm)	710211–06363	710031–02216
81”–99” (2057mm–2515mm)	710211–07363	710031–02216

Item 11: Crossmember Table	
Stand Width	**Crossmember Number**
2”–12” (51mm–304mm)	710210–00976
14” (357mm)	710210–01176
16” (406mm)	710210–01376
18” (457mm)	710210–01576
20” (508mm)	710210–01776
22” (559mm)	710210–01976
24” (610mm)	710210–02176
26” (661mm)	710210–02376
28” (711mm)	710210–02576
30” (762mm)	710210–02776
32” (813mm)	710210–02976
34” (864mm)	710210–03176
36” (915mm)	710210–03376
38” (966mm)	710210–03576
40” (1016mm)	710210–03776
42” (1067mm)	710210–03976
44” (1118mm)	710210–04176
46” (1169mm)	710210–04376
48” (1220mm)	710210–04576

Tall Stand with Feet or Casters

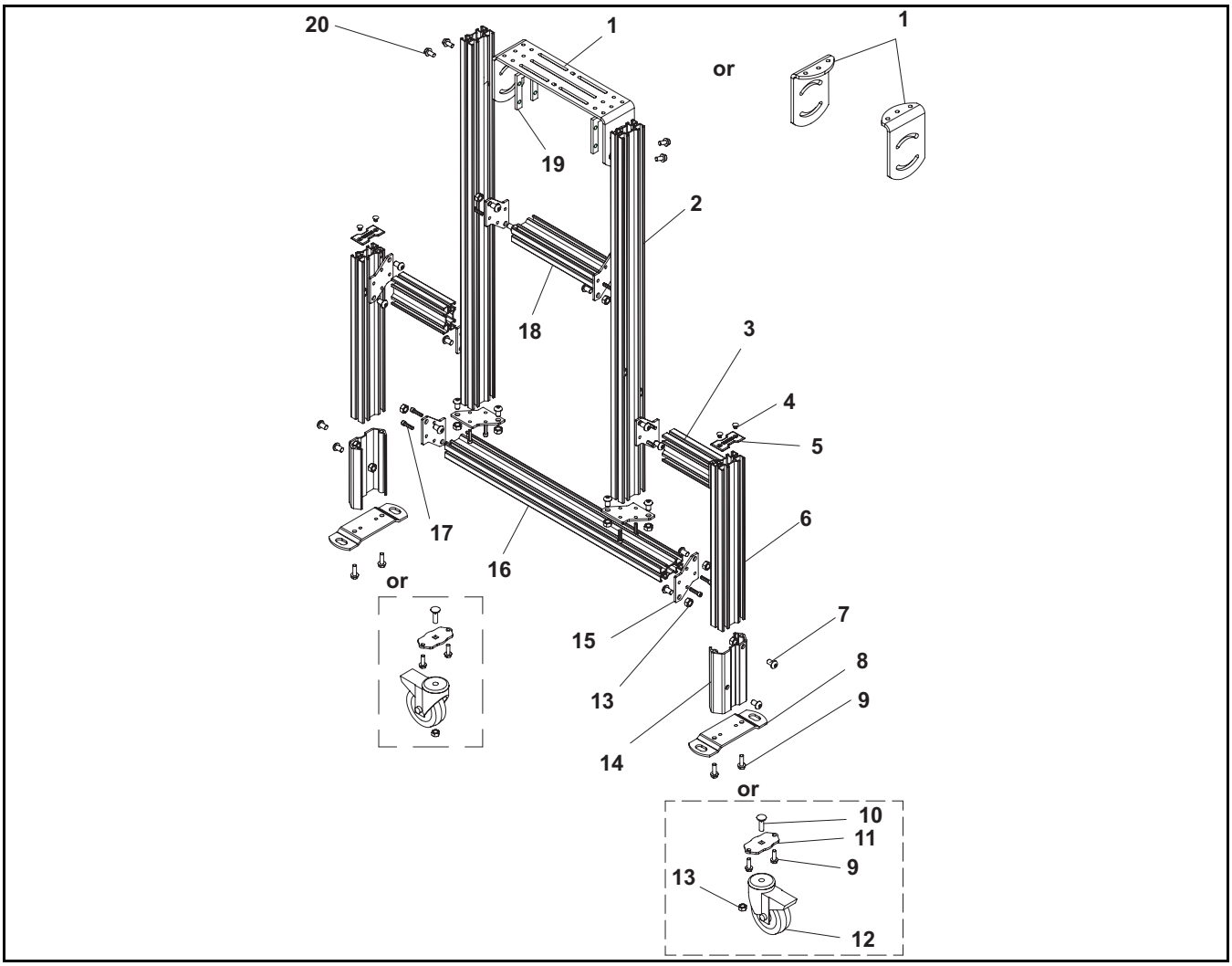

Item	Part Number	Description
1	202148	Bracket, Mtg. 12” (305mm) and under (1x)
	200697	Bracket, Mtg. 14” (357mm) and over (2x)
2	See Inner Leg Table	Leg, Stand, Inner
3	710214–00621	Tie Tube, Stand
4	807–1289	Rivet, Tree, .22 Dia x .75 Long
5	710003	Label–Cover, Stand
6	710211–01663	Leg, Stand, Outer, Fixed Height
	710031–02263	Leg, Stand, Outer, Adjustable Height
7	911016M	Scr, Bttn, Metric M10–1.50x16mm
8	710004	Foot, Stand, Floor Mtg
9	960896M	Scr, Tri–Lobe, Hd–Hex M8x25mm
10	961030M	Bolt, Carriage M10–1.5x35mm
11	710005	Plate, Caster Mtg, Stand
12	807–640	Caster, 4”
13	991001M	Nut, Hex, Full M10–1.50
14	710031–00616	Boot, Stand Leg, Fixed Height
	710031–02216	Boot, Stand Leg, Adjustable Height

Item	Part Number	Description
15	710006	Plate, End, Crossmember Stand
16	See Base Crossmember Table	Crossmember, Stand Base
17	708180P	Scr, sock, Metric M6–1.00x25mm
18	See Crossmember Table	Crossmember, Stand
19	200801M	Nut, Quad, M8–1.25
20	920883M	Scr, Flange, Socket M8–1.25x16mm

Item 2: Inner Leg Table (Fixed Height With Foot)	
Leg Height Range	**Leg Part Number**
41”–45” (1041mm–1143mm)	710211–03763
42”–46” (1067mm–1168mm)	710211–03863
43”–47” (1092mm–1194mm)	710211–03963
44”–48” (1118mm–1219mm)	710211–04063
45”–49” (1143mm–1245mm)	710211–04163
46”–50” (1168mm–1270mm)	710211–04263
47”–51” (1194mm–1295mm)	710211–04363
48”–52” (1219mm–1321mm)	710211–04463
49”–53” (1245mm–1346mm)	710211–04563

Service Parts

Item 2: Inner Leg Table (Fixed Height With Foot)	
Leg Height Range	**Leg Part Number**
50”–54” (1270mm–1372mm)	710211–04663
51”–55” (1295mm–1397mm)	710211–04763
52”–56” (1321mm–1422mm)	710211–04863
53”–57” (1346mm–1448mm)	710211–04963
54”–58” (1372mm–1473mm)	710211–05063
55”–59” (1397mm–1499mm)	710211–05163
56”–60” (1422mm–1524mm)	710211–05263
57”–61” (1448mm–1549mm)	710211–05363
58”–62” (1473mm–1575mm)	710211–05463
59”–63” (1499mm–1600mm)	710211–05563
60”–64” (1524mm–1626mm)	710211–05663
61”–65” (1549mm–1651mm)	710211–05763
62”–66” (1575mm–1676mm)	710211–05863
63”–67” (1600mm–1702mm)	710211–05963
64”–68” (1626mm–1727mm)	710211–06063
65”–69” (1651mm–1753mm)	710211–06163
66”–70” (1676mm–1778mm)	710211–06263
67”–71” (1702mm–1803mm)	710211–06363
68”–72” (1727mm–1829mm)	710211–06463
69”–73” (1753mm–1854mm)	710211–06563
70”–74” (1778mm–1880mm)	710211–06663
71”–75” (1803mm–1905mm)	710211–06763
72”–76” (1829mm–1930mm)	710211–06863
73”–77” (1854mm–1956mm)	710211–06963
74”–78” (1880mm–1981mm)	710211–07063
75”–79” (1905mm–2007mm)	710211–07163
76”–80” (1930mm–2032mm)	710211–07263
77”–81” (1956mm–2057mm)	710211–07363
78”–82” (1981mm–2083mm)	710211–07463
79”–83” (2007mm–2108mm)	710211–07563
80”–84” (2032mm–2134mm)	710211–07663
81”–85” (2057mm–2159mm)	710211–07763
82”–86” (2083mm–2184mm)	710211–07863
83”–87” (2108mm–2210mm)	710211–07963
84”–88” (2134mm–2235mm)	710211–08063
85”–89” (2159mm–2261mm)	710211–08163
86”–90” (2184mm–2286mm)	710211–08263
87”–91” (2210mm–2311mm)	710211–08363
88”–92” (2235mm–2337mm)	710211–08463
89”–93” (2261mm–2362mm)	710211–08563
90”–94” (2286mm–2388mm)	710211–08663
91”–95” (2311mm–2413mm)	710211–08763
92”–96” (2337mm–2438mm)	710211–08863
93”–97” (2362mm–2464mm)	710211–08963
94”–98” (2388mm–2489mm)	710211–09063
95”–99” (2413mm–2515mm)	710211–09163

Item 2: Inner Leg Table (Fixed Height With Caster)	
Stand Height Range	**Leg Part Number**
41”–45” (1041mm–1143mm)	710211–03263
42”–46” (1067mm–1168mm)	710211–03363
43”–47” (1092mm–1194mm)	710211–03463
44”–48” (1118mm–1219mm)	710211–03563
45”–49” (1143mm–1245mm)	710211–03663
46”–50” (1168mm–1270mm)	710211–03763
47”–51” (1194mm–1295mm)	710211–03863

Item 2: Inner Leg Table (Fixed Height With Caster)	
Stand Height Range	**Leg Part Number**
48”–52” (1219mm–1321mm)	710211–03963
49”–53” (1245mm–1346mm)	710211–04063
50”–54” (1270mm–1372mm)	710211–04163
51”–55” (1295mm–1397mm)	710211–04263
52”–56” (1321mm–1422mm)	710211–04363
53”–57” (1346mm–1448mm)	710211–04463
54”–58” (1372mm–1473mm)	710211–04563
55”–59” (1397mm–1499mm)	710211–04663
56”–60” (1422mm–1524mm)	710211–04763
57”–61” (1448mm–1549mm)	710211–04863
58”–62” (1473mm–1575mm)	710211–04963
59”–63” (1499mm–1600mm)	710211–05063
60”–64” (1524mm–1626mm)	710211–05163
61”–65” (1549mm–1651mm)	710211–05263
62”–66” (1575mm–1676mm)	710211–05363
63”–67” (1600mm–1702mm)	710211–05463
64”–68” (1626mm–1727mm)	710211–05563
65”–69” (1651mm–1753mm)	710211–05663
66”–70” (1676mm–1778mm)	710211–05763
67”–71” (1702mm–1803mm)	710211–05863
68”–72” (1727mm–1829mm)	710211–05963

Item 2: Inner Leg Table (Adjustable Height With Foot)	
Stand Height Range	**Leg Part Number**
42”–60” (1067mm–1524mm)	710211–03763
54”–72” (1372mm–1829mm)	710211–04963
66”–84” (1676mm–2134mm)	710211–06163
78”–96” (1981mm–2438mm)	710211–07363
47”–65” (1194mm–1651mm)	710211–03763
59”–77” (1499mm–1956mm)	710211–04963

Item 16: Base Crossmember Table	
Stand Width	**Crossmember Number**
12” (305mm)	710215–02576*
14” (357mm)	710215–02776
16” (406mm)	710215–02976
18” (457mm)	710215–03176
20” (508mm)	710215–03376
22” (559mm)	710215–03576
24” (610mm)	710215–03776
26” (661mm)	710215–03976
28” (711mm)	710215–04176

Item 18: Base Crossmember Table	
Stand Width	**Crossmember Number**
12” (305mm)	710210–00976*
14” (357mm)	710210–01176
16” (406mm)	710210–01376
18” (457mm)	710210–01576
20” (508mm)	710210–01776
22” (559mm)	710210–01976
24” (610mm)	710210–02176
26” (661mm)	710210–02376
28” (711mm)	710210–02576

* Compatible with all conveyor widths of 12” (305mm) or less.

Optional Fine Adjustment Kit

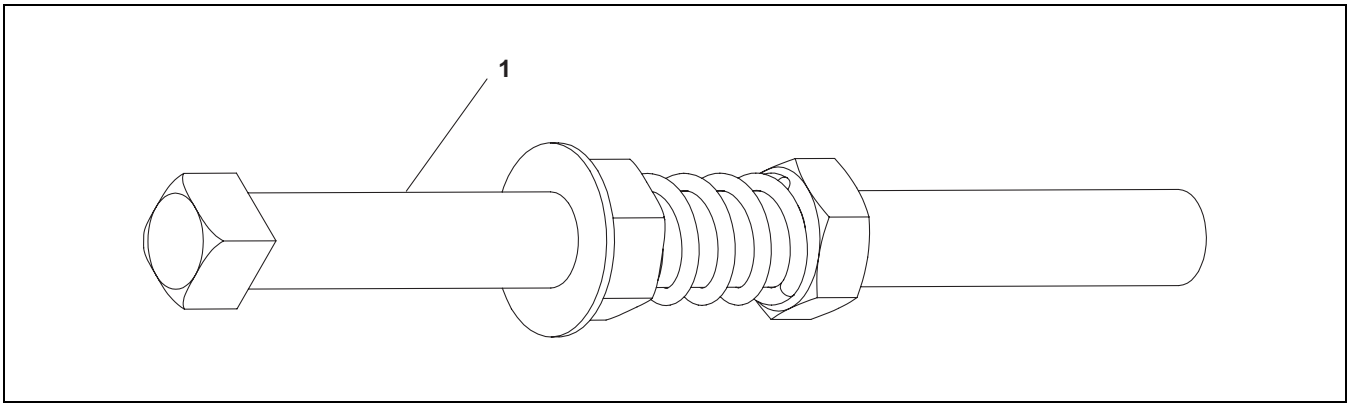

Item	Part Number	Description
1	710028	Fine Adjustment Kit

Return Policy

Returns must have prior written factory authorization or they will not be accepted. Items that are returned to Dorner without authorization will not be credited nor returned to the original sender. When calling for authorization, please have the following information ready for the Dorner factory representative or your local distributor:

1. Name and address of customer.
2. Dorner part number(s) of item(s) being returned.
3. Reason for return.
4. Customer's original order number used when ordering the item(s).
5. Dorner or distributor invoice number.

A representative will discuss action to be taken on the returned items and provide a Returned Goods Authorization number for reference.

There will be a return charge on all new undamaged items returned for credit where Dorner was not at fault. Dorner is not responsible for return freight on such items.

Conveyors and conveyor accessories	
Standard catalog conveyors	30%
MPB Series, cleated and specialty belt conveyors	50%
7400 & 7600 Series conveyors	non-returnable items
Engineered special products	case by case
Drives and accessories	30%
Sanitary stand supports	non-returnable items
Parts	
Standard stock parts	30%
MPB, cleated and specialty belts	non-returnable items

Returns will not be accepted after 60 days from original invoice date.

The return charge covers inspection, cleaning, disassembly, disposal and reissuing of components to inventory.

If a replacement is needed prior to evaluation of returned item, a purchase order must be issued. Credit (if any) is issued only after return and evaluation is complete.

Dorner has representatives throughout the world. Contact Dorner for the name of your local representative. Our Technical Sales, Catalog Sales and Service Teams will gladly help with your questions on Dorner products.

For a copy of Dorner's Warranty, contact factory, distributor, service center or visit our website at www.dorner.com.

For replacement parts, contact an authorized Dorner Service Center or the factory.

Dorner Mfg. Corp. reserves the right to change or discontinue products without notice. All products and services are covered in accordance with our standard warranty. All rights reserved. © Dorner Mfg. Corp. 2006

DORNER MFG. CORP.
975 Cottonwood Ave., PO Box 20
Hartland, WI 53029-0020 USA
USA
TEL 1-800-397-8664 (USA)
FAX 1-800-369-2440 (USA)
Internet: www.dorner.com

Outside the USA:
TEL 1-262-367-7600
FAX 1-262-367-5827

851-558 Rev. C

Printed in U.S.A.