FlexMove® HELIX CONVEYORS

COMPACT SPIRAL & HELICAL CURVE, FLEXIBLE CHAIN CONVEYORS FOR COMPLETE FLEXIBILITY!

- Unique, flexible design provides greater flexibility in layout
  - Infeed and outfeed may be positioned at any height or angle
  - Custom infeed and outfeed lengths allow the conveyor to extend beyond spiral, reducing the number of conveyors required
- Small foot print maximizes valuable floor space
- Patented side roller chain reduces corner friction allowing for faster speeds and smooth product handling
- Applications include accumulation, buffering, cooling product between processes or machines, and more!

Features & Specifications

- Widths: 85 mm, 180 mm, and 260 mm (3, 7 and 10 in)
- Minimum infeed height: 450 mm (18 in)
- Maximum outfeed height: 3350 mm (132 in)
- Incline angles:
  - Up to 7º with flat top chain
  - Up to 10º with friction top chain
- Loads: up to 136 kg (300 lbs)
- Speeds: Up to 52 mpm (171 fpm)
- Maximum number of tiers: 4
- Maximum distance between tiers = 762 mm (30 in)
- Diameter of spiral = 1400 mm (55.12 in) at centerline

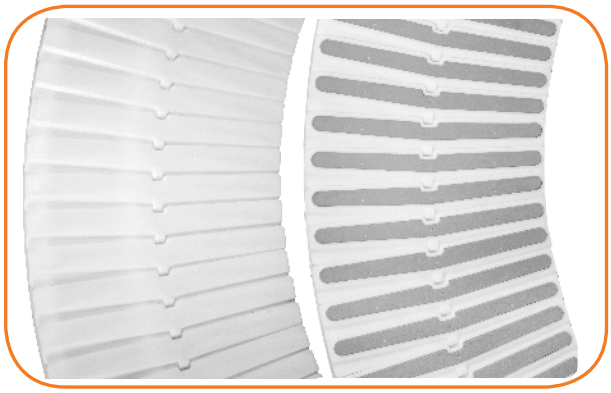

Flat Top Chain & TPE Friction Top Chain

Chain Specifications

- Material: Acetal
- Patented design with low friction sealed ball bearings to reduce friction
- Types:
  - Flat top chain for product movement or accumulation up to 7º
  - TPE friction top chain for product incline up to 10º

Patented Chain Design

Options & Accessories

End Transfer Options:

- Roller Transfer Plate
- Powered Transfer for smooth transfer of parts as small as 76 mm (3 in) in diameter

Guiding Options:

- 25 mm (1 in) Aluminum High Side
- 76 mm (3 in) Aluminum High Side
- Fully Adjustable UHMW Guide
- Tool-less Fully Adjustable UHMW Guide

Adjustable Guiding

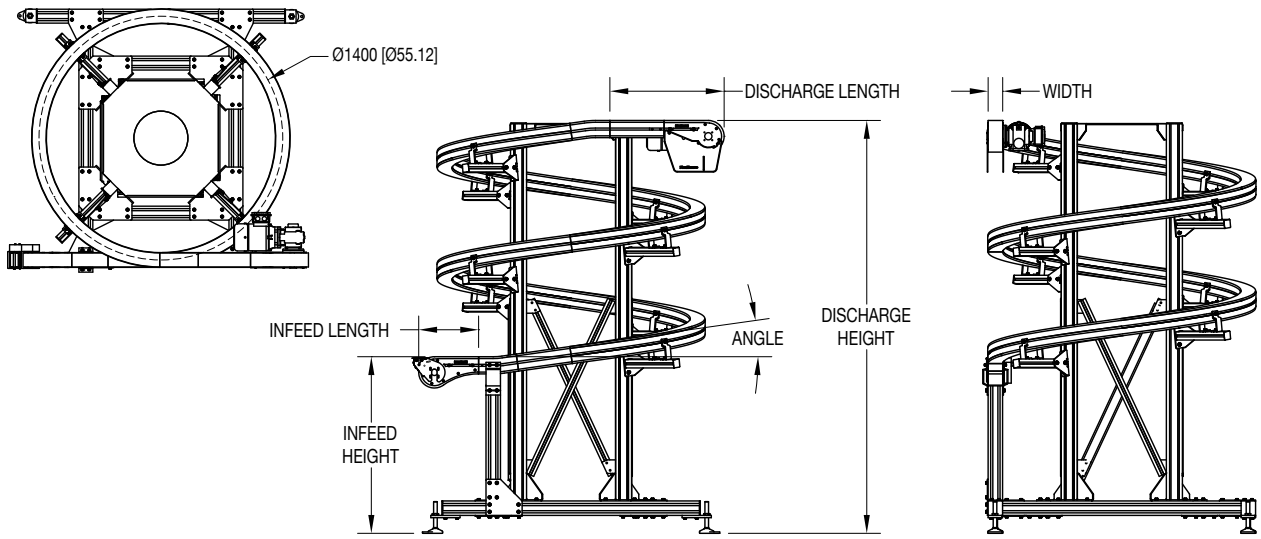

Transforming Conveyor Automation

Dorner – North & South America

Dorner – U.S.A. Headquarters
975 Cottonwood Ave
Hartland, WI 53029, USA
(800) 397-8664
(262) 367-7600
info@dorner.com

Dorner – Canada
100-5515 North Service Road
Burlington, Ontario L7L 6G6
Canada
(289) 208-7306
info@dorner.com

Dorner – Latin America
Carretera a Nogales #5297,
Nave 11. Parque Industrial Nogales
Zapopan, Jalisco C.P. 45222
Mexico
+52.33.30037400
info.latinamerica@dorner.com

Dorner – Europe

Dorner – Germany
Karl-Heinz-Beckurts-Straße 7
52428 Jülich,
Germany
+49 (0) 2461/93767-0
info.europe@dorner.com

Dorner – France
8-10 Rue de Nieuport
78140 Vélizy-Villacoublay,
France
+33 (0)1 84 73 24 27
info.france@dorner.com

Dorner – Asia

128 Jalan Permatang Damar Laut, Bayan Lepas 11960
Penang, Malaysia
+604-626-2948 | info.asia@dorner.com

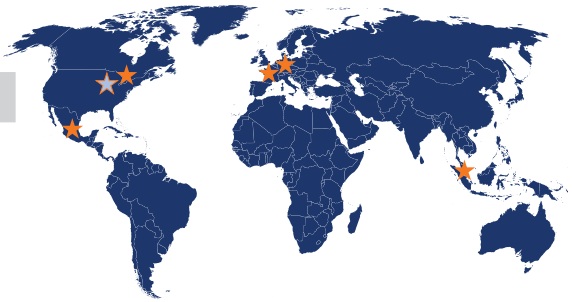

www.dornerconveyors.com

© Dorner Mfg. Corp. 2019. All Rights Reserved. 851-841 Rev B EGI-1M-0919