ETM Conveyor Drive System

1/2HP (370W)

User Manual

Table of Contents

Drive Features 1
Drive Specifications 2
Certifications 3
Installation - Drive Dimensions 3
Motor Dimensions (mm) 4
Drive Mounting 4
Wiring 5
Menu 6
Status Monitor 8
Fault Codes 8
Factory Test Menu 9
Initial Start-up Procedure 9
Drive (Controller) Label 9
Motor Label 10
Notes 10

Drive Features

- Versatile input voltage range
- Fan-less design with mounting plate heat sink
- Simple analog controls and RS-485 digital interface
- Compact integrated system with ETM's **M100 Direct Drive Motor** and **MD100 Motor Drive**
- Internal protection
  - Motor regeneration effects
  - Motor and controller over-temp
  - Locked rotor
- Sinusoidal current control for smooth quiet motor operation

1409 East Butler Avenue Flagstaff, AZ 86001-5920 TEL: +1-928-779-3169 etmpower.com

Electric Torque Machines and designs are trademarks of Electric Torque Machines, Inc. ©2015

Drive Specifications

General Specifications	
Model	Drive: MD100 .5HP (370W) Electric Motor Drive, P/N 1006459-01
	Motor: M100 Direct Drive Motor, P/N 1005081-00
Input Power	
AC Input Range	120 - 240VAC, +/- 10%, 1Ø
AC Input Frequency	47Hz – 63Hz
Outputs	
Motor	U, V, W 3 phase motor drive
DC Bus Voltage	170V (115VAC mains), 340V (230VAC mains)
Motor Power Output	.5HP (.37kW) continuous
Output Current	$5.8A_{rms}$ at 120VAC input, $4.9A_{rms}$ at 240VAC input
Inputs/Outputs	
Front Panel	FWD/STOP/REV, Speed Control (UP/DOWN Arrows)
Analog/Digital Signals	See Table 1 below (Terminal Strip Signals)
Communications	
RS-485	ASCII serial commands, MODBUS
Motor Feedback	
Encoder	Absolute digital encoder, isolated
Motor Temp	Thermistor, isolated
Display	
LCD	16X2 character LCD display
Protections	
Motor Over Temperature	Current limit and LCD status enable >90°C, Drive disable >110°C
Drive Over Temperature	Current limiting when drive temp exceeds 90°C
Protective Earth	External ground connection marked per IEC60417
Safe Torque Off	See NOTE 1 below
Regeneration	Drive protected in overvoltage state
Mechanical and Environmental	
Size	8.0in (203mm) X 5.5in (140mm) X 2.4in (61mm)
Weight	8Lbs (3.6kg)
Ambient Temperature	0 to +30°C operating, -40 to +85°C storage
Agency Conformance	
	UL Listed to standard UL 61800-5-1. E-File number E478050
	ROHS Compliant
Enclosure	
	NEMA 1, IP 20, Black ABS (UL 94 5VA Compliant)
Test Conditions	Wye connected load: Ambient temperature = 25°C, Power input = 115VAC, 60Hz, 1Ø

Electric Torque Machines and designs are trademarks of Electric Torque Machines, Inc. ©2015

Certifications

Product is UL Listed to standard UL 61800-5-1. EFile number E478050.
Drives shall be indicated for use in a pollution degree 2 environment.

Installation - Drive Dimensions

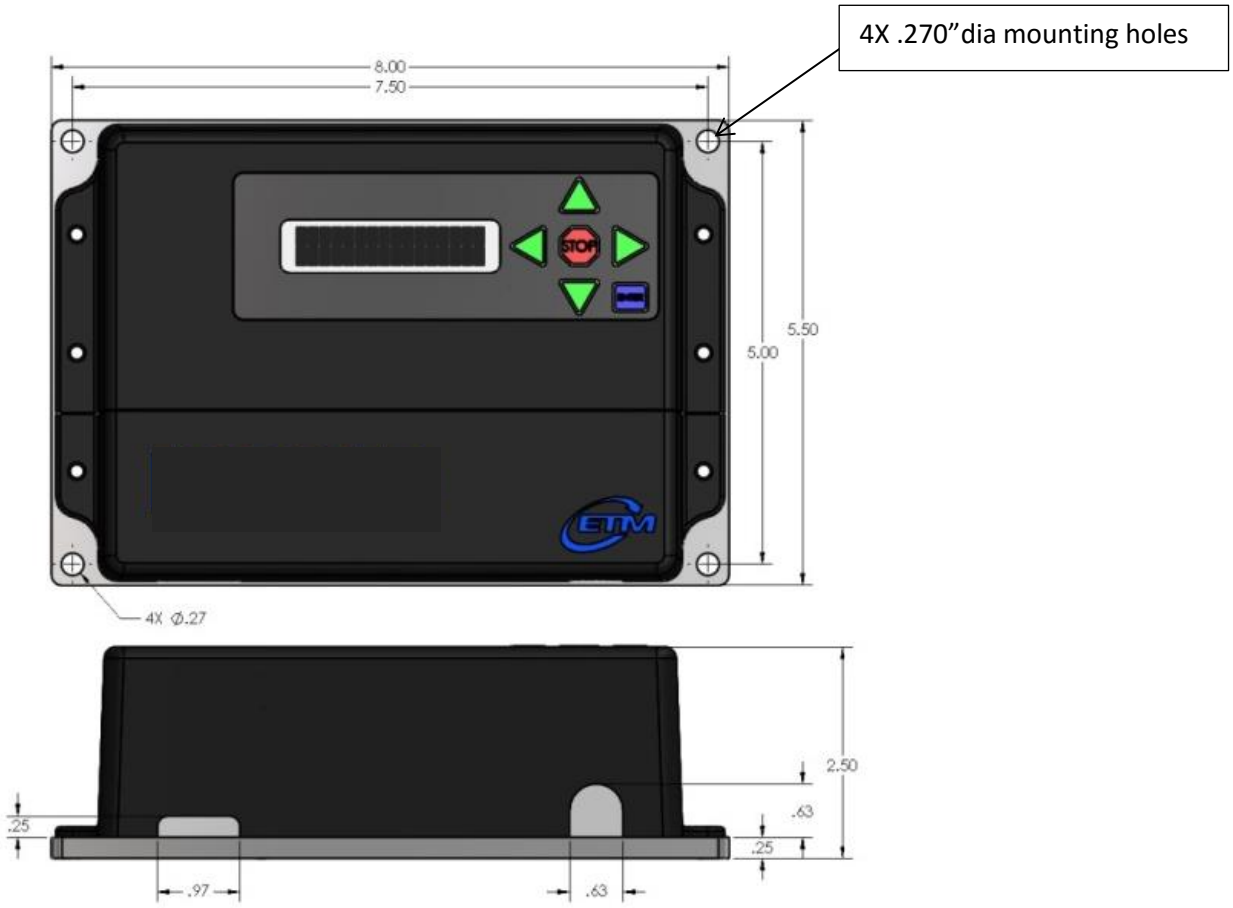

Electric Torque Machines and designs are trademarks of Electric Torque Machines, Inc. ©2015

Motor Dimensions (mm)

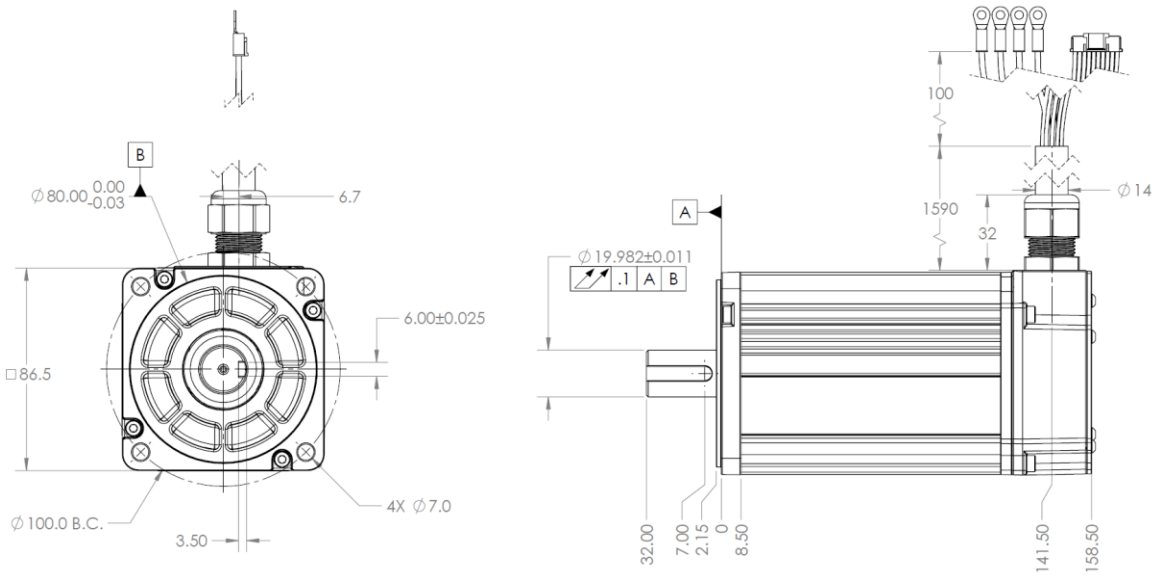

Drive Mounting

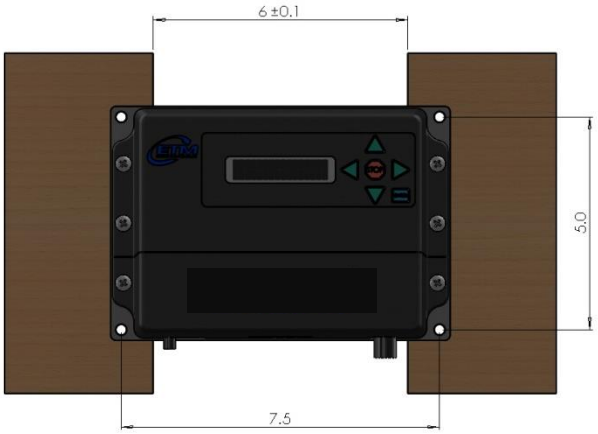

All dimensions in inches. Drive shall be mounted vertically.
Ensure center of heatsink is exposed to airflow, as shown above.

Electric Torque Machines and designs are trademarks of Electric Torque Machines, Inc. ©2015

Wiring

Figure 1 shows the cable connections from the motor to the drive, as well as the I/O and signal connections.
Branch protection shall be provided with Class K5 fuses rated 20A maximum, or the equivalent.
Note: Motor must be wired to Drive before Supply Power is turned on.

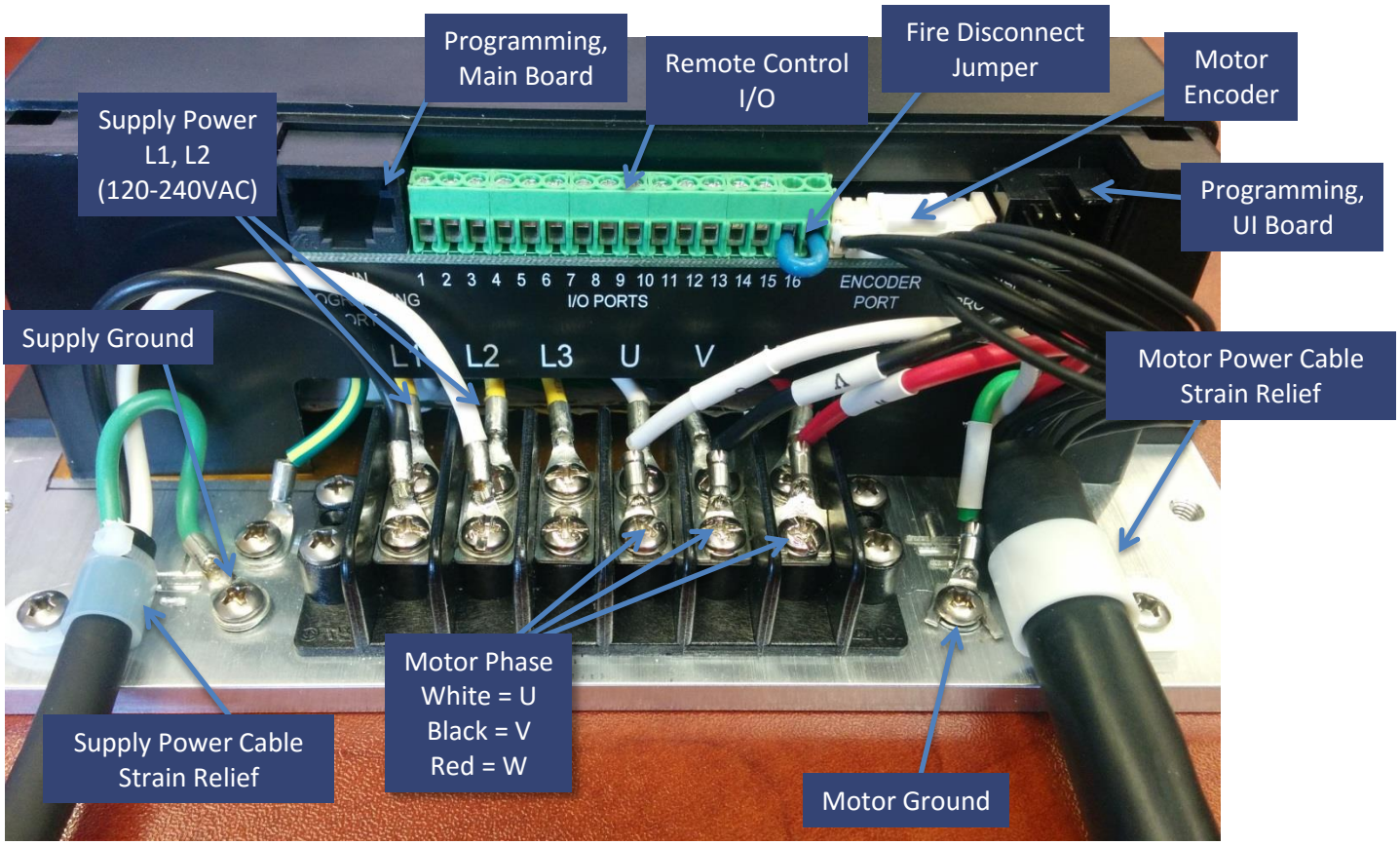

Figure 1: Cable connections

Electric Torque Machines and designs are trademarks of Electric Torque Machines, Inc. ©2015

I/O Terminals

Terminal	Description	Notes
1	Start/Stop	
2	Analog Common	
3	Analog Input (Potentiometer)	Speed Control
4	DC Supply	5VDC, 10ma (Speed Control)
5	FWD/REV	
6	Digital Common	0VDC
7	Digital Output	Fault
8	Analog Output	0..5, max 20ma (Speed Reference)
9	TXA (RS485+)	
10	TXB (RS485-)	
11	AUX_IN1	
12	AUX_IN2	
13	AUX_OUT1	
14	AUX_OUT2	
15	Drive Enable	
16	Ground (Isolated)	

Table 1: Remote Control Signals (Isolated)

Menu

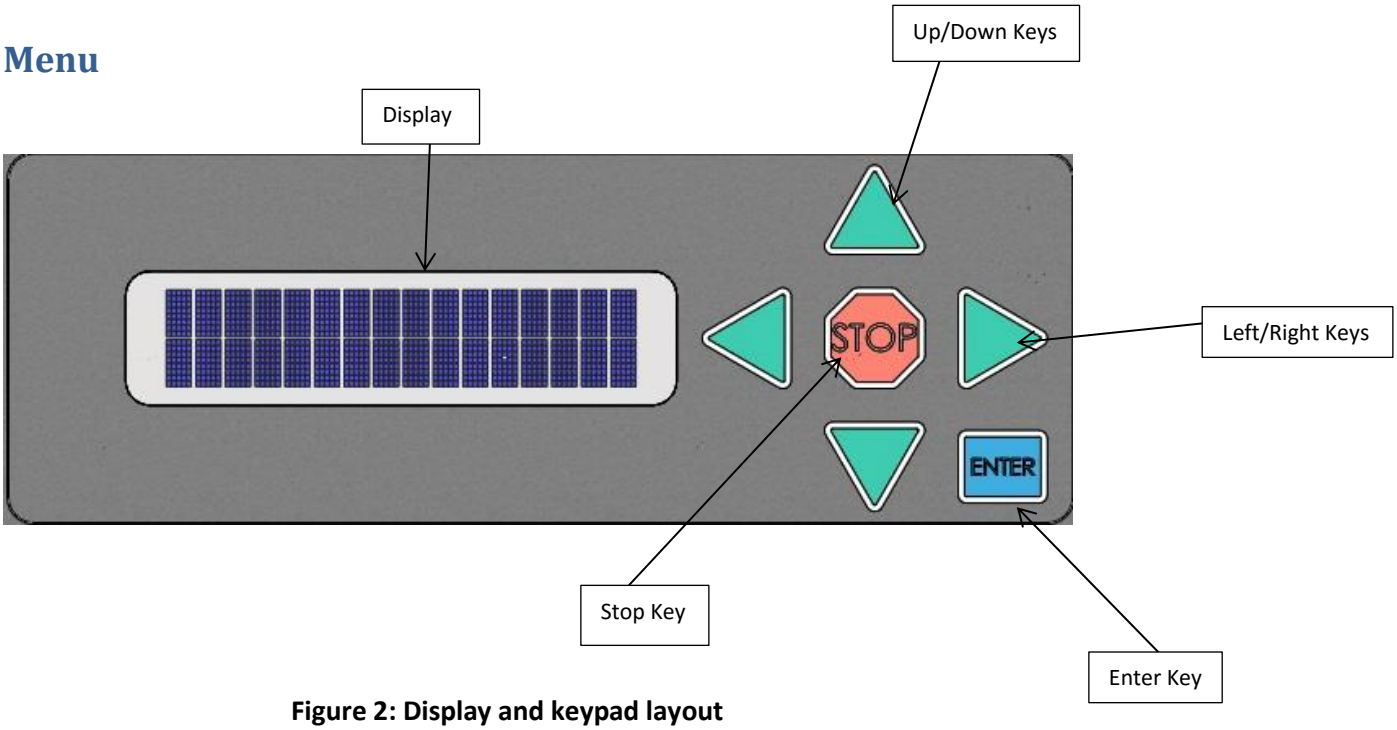

Figure 2: Display and keypad layout

Electric Torque Machines and designs are trademarks of Electric Torque Machines, Inc. ©2015

On startup, the display shows the following text:

```
STOP          10 RPM
Speed Adj Up/Dwn
```

- The speed (in RPM) of the motor can be adjusted by pressing the UP/DOWN arrows on the keypad.
- Press the ENTER key to confirm the selected speed. Speed is limited by the min/max speed determined by the user.
- Once the correct speed has been selected, pressing the RIGHT arrow key will start the motor in the forward/reverse direction. (Determined by Start Key menu option)
- Pressing the STOP key will stop the motor.
- Holding the LEFT arrow key and then holding the ENTER key for 2 seconds (while still holding the LEFT key) will lock out the direction and speed controls on the keypad. STOP will still be available. Remote direction and speed controls will still be available. Hold LEFT and ENTER again to unlock keypad. A locked display is indicated with the symbol Ω.

To access the settings menu, hold down the ENTER key for 2+ seconds. Use the UP/DOWN keys to cycle through the menu options. Use the LEFT/RIGHT keys to adjust each setting. Press the ENTER key to confirm a setting change. Table 2 shows the structure of the menu options. To exit the menu, navigate to the "To Exit Menu Press ENTER" option, and press the ENTER key.

Menu	Parameters	Description
Control Source	Keypad*	Speed/Start/Stop from Front Keypad
	Remote	Start/Stop Control from Terminal Strip
	Modbus	Modbus Interface (RS485) TBD
Reference Source	Keypad *	Speed Reference from Keypad
	0-5V Analog In	0-5VDC (Speed Control) from Terminal Strip
Start Key	Forward*, Reverse	Start Key direction
Minimum Speed	10 RPM	10-500 RPM (10 RPM Default)
Maximum Speed	500 RPM	10-500 RPM (500 RPM Default)
Acceleration Time	500 msec	20-3600 mseconds (500 mseconds default)
Deceleration Time	500 msec	20-3600 mseconds (500 mseconds default)
Input Polarity	Active High*	Start/FWD inputs on Terminal Strip
	Active Low	Start/FWD inputs on Terminal Strip
Belt Speed Ratio	476/1000 RPM/Ft/min	1:1 Ratio to motor speed, 1-1000
Monitor	See Table 3	Status monitors
Backlight Adjust	0-100%	Display Backlight Control
Contrast Adjust	0-100%	Display Contrast Control
Firmware	Drive	Current Drive firmware version
	Display	Current Display firmware version

Table 2: Front Panel Menu Options *indicates default selection

Electric Torque Machines and designs are trademarks of Electric Torque Machines, Inc. ©2015

Status Monitor

To access the status monitors of the drive and motor, hold the ENTER key for 3+ seconds to open the menu. Then use the UP/DOWN keys to navigate to the Monitor subsection. Use the LEFT/RIGHT keys to cycle through the different monitor options.

Monitor	Description
Status1	Fault code display
Status2	Fault code display
Speed	Motor speed in RPM
MCU Temp	Drive MCU temp
Enclosure Temp	Drive enclosure temp
Drive Temp	Drive heatsink temp
Motor Temp	Motor temp
ExtSpdInp	0-5V value of external speed input
Phase	Current in A_{rms}

Table 3: Status Monitor Menu Options

Fault Codes

Status1 and Status2 indicate possible fault codes from the drive or motor. Each status is a hexadecimal representation of a 16 bit binary word. Each bit represents a different fault. Table 4 describes the fault codes associated with each bit.

Status2 bit	Description	Status1 bit	Description
0x0001	Supply voltage high warning	**0x0001**	Drive is Enabled
0x0002	Supply voltage low warning	**0x0002**	Keep-Alive timeout
0x0004	Supply voltage high fault	**0x0004**	Fire Disconnect
0x0008	Supply voltage low fault	**0x0008**	Overspeed fault
0x0010	Phase Current A high fault	**0x0010**	Underspeed fault
0x0020	Phase Current B high fault	**0x0020**	Display interface frame error
0x0040	Phase Current C high fault	**0x0040**	Overload fault
0x0080	Motor temp high warning	**0x0080**	Not Used
0x0100	Motor Temp high fault	**0x0100**	Not Used
0x0200	Heatsink temp high warning	**0x0200**	Encoder Stuck
0x0400	Heatsink temp high fault	**0x0400**	Error reading EEPROM
0x0800	Ambient temp high warning	**0x0800**	Error writing EEPROM
0x1000	Ambient temp high fault	**0x1000**	Encoder error
0x2000	Phase current following error	**0x2000**	Receive frame errors
0x4000	Sudden change of speed	**0x4000**	MCU high temp fault
0x8000	Spin Test Complete	**0x8000**	Remote Interface

Table 4: Status1 and Status2 Fault Codes

Electric Torque Machines and designs are trademarks of Electric Torque Machines, Inc. ©2015

Factory Test Menu

The factory test menu has several extra options for debugging and resetting the drive and motor.
WARNING: the factory test menu should only be accessed by technicians troubleshooting problems with the drive or motor.
To access the factory test menu, navigate to the "Exit Menu" option of the main menu, then press STOP, LEFT, RIGHT, ENTER, in order one at a time. The display will then indicate the factory test menu is active. All the standard menu features are available in the factory test menu, as well as several extra options. Table 5 shows the structure of the extra factory test options.

Menu	Parameters	Description
Test Mode	Spin Test	Initiates Spin Test
Encoder Pos	0-4095	Encoder positive alignment
Encoder Neg	0-4095	Encoder negative alignment
Firmware	Drive	Current Drive firmware version
	Display	Current Display firmware version
	Update	Allows firmware update
	Reset	Resets factory default settings
Phase Alignment	Press Enter	Initiates automatic encoder alignment

Table 5: Factory Test Menu Options

Initial Start-up Procedure

When a Drive and Motor are first connected, or when the Drive has been reset to factory defaults, the Drive must perform a one-time setup procedure to align the encoder on the Motor. When the drive is powered on, the display will read "Verify Motor or Conveyor is free to move and unloaded. Press Enter to Initialize Motor…". Once the user has verified that the Motor is wired to the Drive, and there is no load on the conveyor, press ENTER to continue. The Motor will slowly turn one revolution forward. Once complete, the display will return to the home screen and normal operations can resume.

The Phase alignment can also be accessed through the Factory Test Menu. Navigate to the Phase Alignment option and press ENTER to perform the alignment.

Drive (Controller) Label

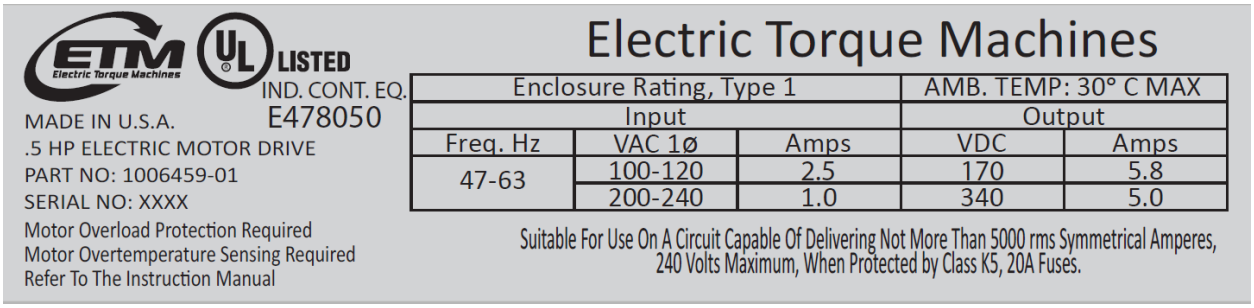

Electric Torque Machines and designs are trademarks of Electric Torque Machines, Inc. ©2015

Motor Label

ELECTRIC TORQUE MACHINES TRANSVERSE FLUX MOTOR
MADE IN U.S.A.

PART #: 1005081-00
SERIAL #: XXXX
VOLTAGE: 350 VDC MAX

AMBIENT: 30C
INSULATION: 130 (B)
RESISTANCE: 1.2 OHM

RATING		STALL	MAX POWER
TORQUE	(Nm)	7.1	4.6
SPEED	(RPM)	0	1100
CURRENT	(A_{RMS})	6.2	4.1
POWER	(W)	0	530

US PATENTS: 8053944, 8222786, 8405275, 8415848, 8749108, 8760023, 8836196, 8952590 Other Patents Pending and Foreign Patents

Notes

The drive is not provided with motor overload protection, external overload protection should be considered in the end product.

The drive does not provide over temperature protection, external over temperature protection should be considered in the end product.

Electric Torque Machines and designs are trademarks of Electric Torque Machines, Inc. ©2015