Installation, Maintenance & Parts Manual

MPB Series End Drive Conveyors

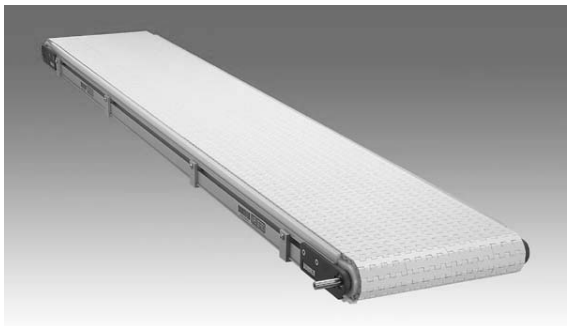

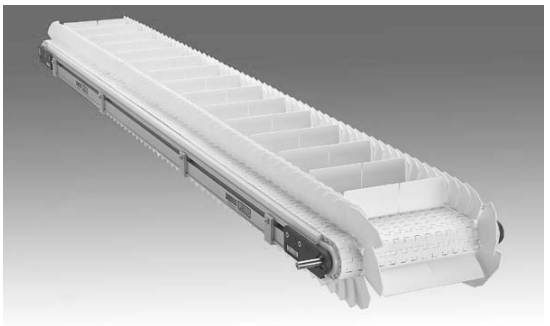

Table of Contents

Warnings – General Safety 2
Introduction 3
Product Description 3
Specifications 3
Load vs Speed vs Conveyor Length Per Width 5
Installation 7
Required Tools 7
Recommended Installation Sequence 7
Conveyors Up to 3658 mm 7
Conveyors Longer Than 3658 mm 7
Mounting Brackets 8
Installing Plastic Belt 9
Preventative Maintenance & Adjustment 10
Required Tools 10
Standard Tools 10
Special Tools 10
Checklist 10
Lubrication 10
Maintaining Conveyor Belt 10
Troubleshooting 10
Cleaning 10
Conveyor Belt Replacement 10
Conveyor Belt Replacement Sequence 10
Belt Removal 10
Belt Installation 11
Conveyor Belt Tensioning 12
Pulley Removal 14
A – Idler Pulley Removal 14
B – Drive Pulley Removal 15
Bearing Removal & Replacement 15
Pulley Replacement 16
Drive Pulley 16
Idler Pulley 17
Service Parts 20
102mm and 152mm Wide Conveyor Assembly 20
305mm Conveyor Assembly 23
457mm and 610mm Wide Conveyor Assembly 27
Return Wear Strip Assembly–Under 914mm Long 30
Return Wear Strip Assembly–Over 914mm Long 31
–04 76mm Aluminum Side 32
–05 38mm Aluminum Side 33
–13 Adjustable Guiding 35
51mm Cleated Guiding 36
Flat Belt Mounting Bracket 37
Cleated Belt Mounting Bracket 37
Flat Belt Mounting Brackets for 610mm Conveyors 38
Cleated Belt Mounting Brackets for 610mm Conveyors . 38
Connecting Assembly without Stand Mount 39
Flat Belt Connecting Assembly with Stand Mount 39
Cleated Belt Connecting Assembly with Stand Mount . . . 40
Conveyor Belting 41
Complete Conveyor Belt 41
Belting Per 305mm 41
Return Policy 44

851-493 Rev. D

Warnings – General Safety

WARNING

The safety alert symbol, black triangle with white exclamation, is used to alert you to potential personal injury hazards.

DANGER

Climbing, sitting, walking or riding on conveyor will cause severe injury.

KEEP OFF CONVEYORS.

DANGER

DO NOT OPERATE CONVEYORS IN AN EXPLOSIVE ENVIRONMENT.

WARNING

Gearmotors may be HOT.

DO NOT TOUCH Gearmotors.

WARNING

Exposed moving parts can cause severe injury.

LOCK OUT POWER before removing guards or performing maintenance.

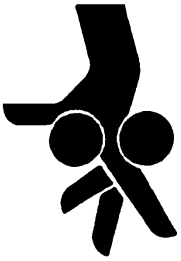

WARNING

MPB Series Conveyors are not reversible. Reversing creates pinch points which can cause severe injury.

DO NOT REVERSE MPB SERIES CONVEYORS.

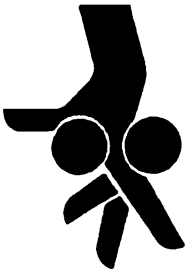

WARNING

For MPB Series Flat and Cleated Belt Conveyors, Top and Bottom Mount Gearmotors must be mounted as shown below.

Failure to do so creates pinch points which can cause severe injury.

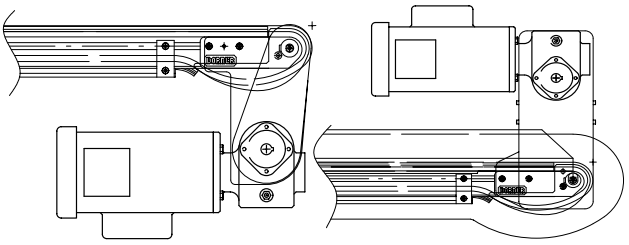

Flat Belt Bottom Mount **Cleated Belt Top Mount**

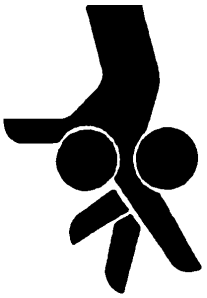

WARNING

Dorner cannot control the physical installation and application of conveyors. Taking protective measures is the responsibility of the user.

When conveyors are used in conjunction with other equipment or as part of a multiple conveyor system, CHECK FOR POTENTIAL PINCH POINTS and other mechanical hazards before system start-up.

WARNING

Loosening stand height or angle adjustment screws may cause conveyor sections to drop down, causing severe injury.

SUPPORT CONVEYOR SECTIONS PRIOR TO LOOSENING STAND HEIGHT OR ANGLE ADJUSTMENT SCREWS.

Introduction

IMPORTANT: Some illustrations may show guards removed. DO NOT operate equipment without guards.

Upon receipt of shipment:

- Compare shipment with packing slip. Contact factory regarding discrepancies.
- Inspect packages for shipping damage. Contact carrier regarding damage.
- Accessories may be shipped loose. See accessory instructions for installation.

Dorner's Limited Warranty applies.

Dorner MPB & 2200 series conveyors are covered by Patent Numbers 5,174,435, 6,298,981 and corresponding patents and patent applications in other countries.

Dorner reserves the right to make changes at any time without notice or obligation.

Dorner has convenient, pre–configured kits of Key Service Parts for all conveyor products. These time saving kits are easy to order, designed for fast installation, and guarantee you will have what you need when you need it. Key Parts and Kits are marked in the Service Parts section of this manual with the Performance Parts Kits logo .

Product Description

Refer to Figure 1 for typical conveyor components.

Typical Components

A	Conveyor
B	Gearmotor Mounting Package
C	Gearmotor
D	Guiding & Accessories
E	Mounting Brackets
F	Support Stand
H	Drive End
I	Idler/Tension End

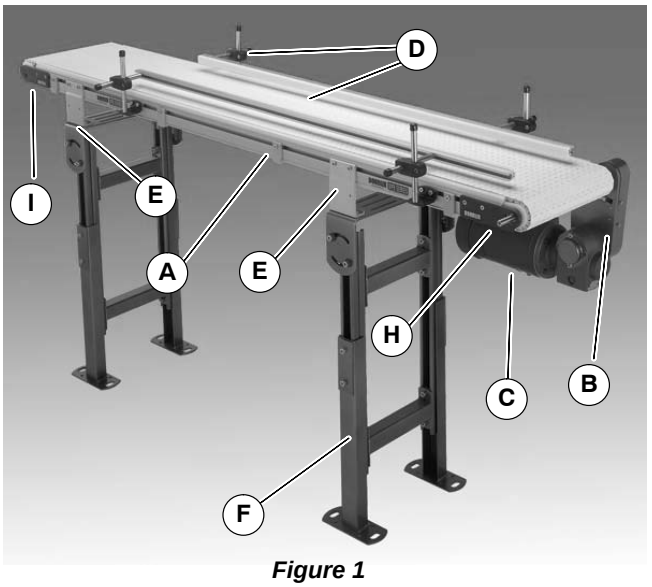

Figure 1

Specifications

Models:

Flat Belt MPB Series Conveyor

2 P 0 M WW LLLL A PP BB

- BB — Belt Type*
- PP — Conveyor Profile*
- A — Output Shaft Position*
- LLLL — Conveyor Length Reference
- WW — Conveyor Width Reference
- M — Document Language, M = English
- 0 — Stand Brackets: 0 = With required brackets; 1 = Without required brackets
- P — Bedplate Style: C = Closed; P = Perforated
- 2 — MPB Series Plastic Belt Conveyor

Cleated Belt MPB Series Conveyor

2 P 2 M WW LLLL A BB SS

- SS — Cleat Spacing*
- BB — Belt Type*
- A — Output Shaft Position*
- LLLL — Conveyor Length Reference
- WW — Conveyor Width Reference
- M — Document Language, M = English
- 2 — Stand Brackets: 2 = With required brackets; 3 = Without required brackets
- P — Bedplate Style: C = Closed; P = Perforated
- 2 — MPB Series Plastic Belt Conveyor

*** See Ordering and Specifications Catalog for details.**

Specifications

Conveyor Supports:

Maximum Distances:

J = 457 mm**

K = 1829 mm***

L = 457 mm

** For Heavy Load Bottom Mount Package, mount support under gear head.

*** For conveyors longer than 3962 mm, install support at joint.

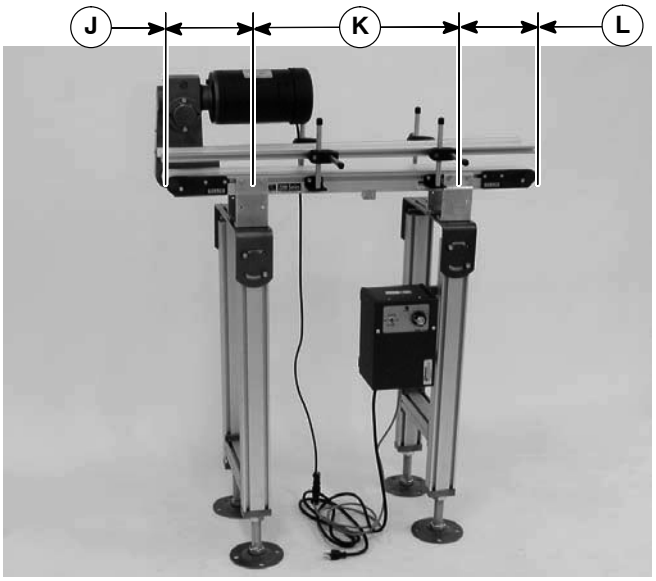

Figure 2

Specifications:

Conveyor Width Reference (WW)	04	06	12	18	24
Conveyor Belt Width	76mm	133mm	286mm	438mm	591mm
Conveyor Length Reference (LL)	0200 to 3000 in 0002 increments				
Conveyor Length	610mm to 9144mm in 6mm increments				
Belt Travel	209 mm per revolution of pulley				
Maximum Belt Speed*	76.2 m/minute for flat belt models 45.7 m/minute for cleated belt models				
Belt Takeup	38 mm of stroke = 76 mm of belt take-up				

No Load Torque

NOTES:

1. No Load torques are for Flat Belt conveyors only. For No Load torques on Cleated and Sidewall Cleated Conveyors contact the factory.
2. The torque required to overcome the conveyor's initial startup inertia may temporarily exceed the average "no load" torque by a factor of 2 to 3 times.
3. Stated torques are average values based on Dorner standard belts running at 15 meters per minute.

No Load Torque Data

Length (mm)	Width				
	76mm	133mm	286mm	438mm	591mm
	N–m	N–m	N–m	N–m	N–m
610mm	0.6	0.6	0.7	0.8	0.8
914mm	0.6	0.7	0.8	0.9	1.0
1219mm	0.6	0.7	0.8	1.0	1.1
1524mm	0.7	0.7	0.9	1.0	1.2
1829mm	0.7	0.7	0.9	1.1	1.3
2134mm	0.7	0.8	1.0	1.2	1.5
2438mm	0.7	0.8	1.1	1.3	1.6
2743mm	0.7	0.8	1.1	1.4	1.7
3048mm	0.7	0.9	1.2	1.5	1.9
3353mm	0.8	0.9	1.3	1.6	2.0
3658mm	0.8	0.9	1.3	1.7	2.1
3962mm	0.8	0.9	1.4	1.8	2.3
4267mm	0.8	1.0	1.4	1.9	2.4
4572mm	0.8	1.0	1.5	2.0	2.5
4877mm	0.9	1.0	1.6	2.1	2.6
5182mm	0.9	1.1	1.6	2.2	2.8
5486mm	0.9	1.1	1.7	2.3	2.9
5791mm	0.9	1.1	1.8	2.4	3.0
6096mm	0.9	1.2	1.8	2.5	3.2
6401mm	0.9	1.2	1.9	2.6	3.3
6706mm	1.0	1.2	1.9	2.7	3.4
7010mm	1.0	1.2	2.0	2.8	3.6
7315mm	1.0	1.3	2.1	2.9	3.7
7620mm	1.0	1.3	2.1	3.0	3.8
7925mm	1.0	1.3	2.2	3.1	3.9
9230mm	1.1	1.4	2.3	3.2	4.1
8534mm	1.1	1.4	2.3	3.3	4.2
8839mm	1.1	1.4	2.4	3.4	4.3
9144mm	1.1	1.4	2.5	3.5	4.5

Load vs Speed vs Conveyor Length Per Width

NOTE: Maximum conveyor loads based on:

- **Non-accumulating product**
- **Product moving towards gearmotor**
- **Conveyor being mounted horizontal**

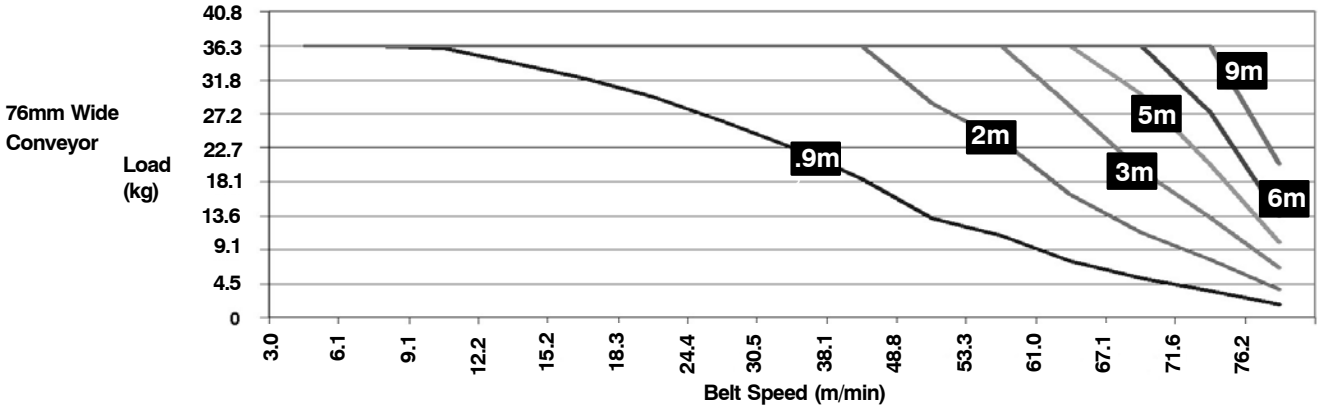

Specifications

1.33mm Wide Conveyor

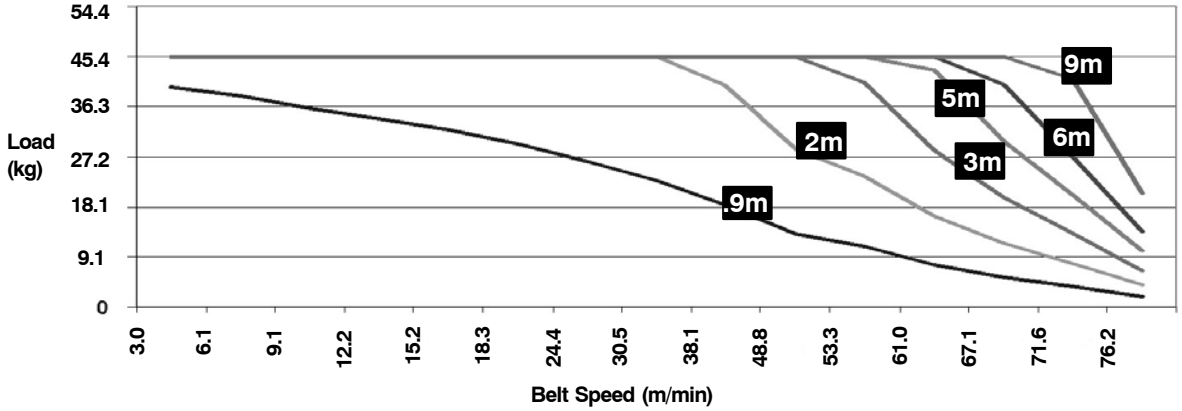

286mm Wide Conveyor

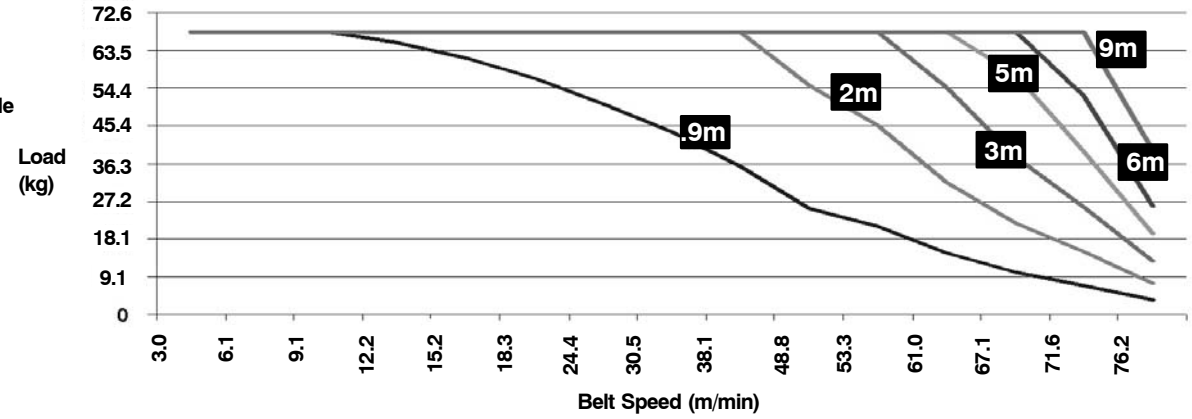

438mm Wide Conveyor

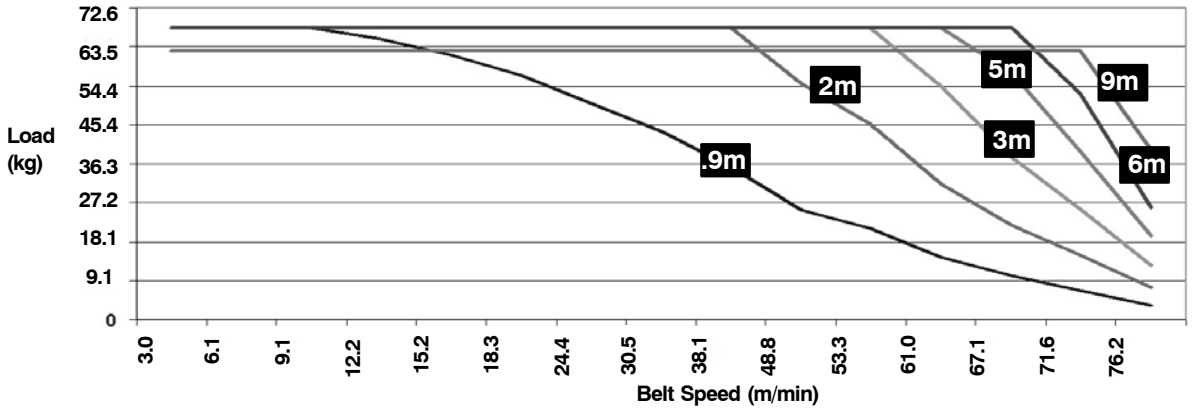

591mm Wide Conveyor

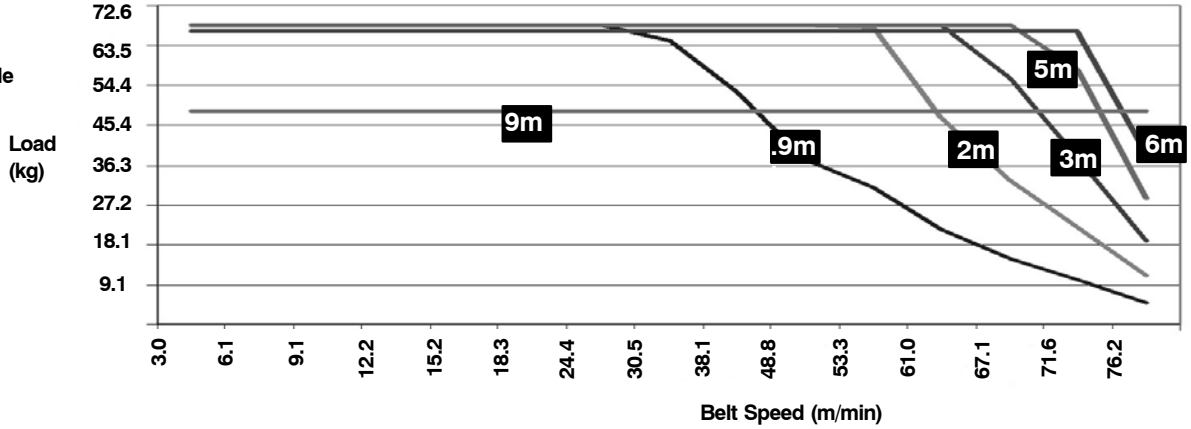

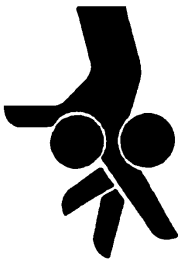

WARNING

MPB Series Conveyors are not reversible. Reversing creates pinch points which can cause severe injury.

DO NOT REVERSE MPB SERIES CONVEYORS.

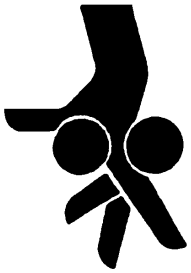

WARNING

For MPB Series Flat and Cleated Belt Conveyors, Top and Bottom Mount Gearmotors must be mounted as shown below.

Failure to do so creates pinch points which can cause severe injury.

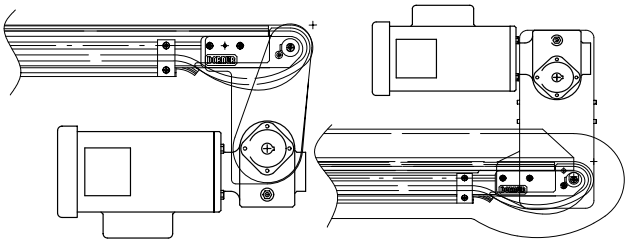

Flat Belt Bottom Mount **Cleated Belt Top Mount**

NOTE: Conveyor MUST be mounted straight, flat and level within confines of conveyor. Use a level (M of Figure 3) for setup.

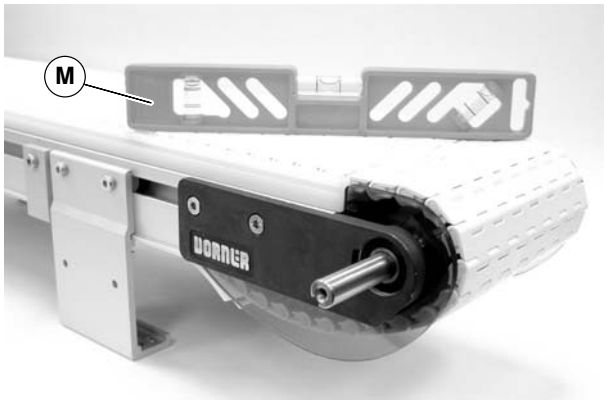

Figure 3

Required Tools

- Hex-key wrenches:
  4 mm, 5 mm
- Level
- Torque wrench
- 2.4 mm wide Flat Blade screwdriver

Recommended Installation Sequence

- Install support stands (see accessory instructions)
- Assemble conveyor frame(if required)(page 7)
- Attach mounting brackets to conveyor frame and stands (page 8)
- Install Belt (page 9)
- Mount gearmotor mounting package (see accessory instructions)
- Attach guides/accessories (see page 32 through 36 of "Service Parts" section for details)

Conveyors Up to 3658 mm

No assembly is required. Install mounting brackets. Refer to "Mounting Brackets" on page 8.

Conveyors Longer Than 3658 mm

NOTE: Conveyors shipped in multiple sections will have a return wearstrip extending from the end of the conveyor. See Figure 4.

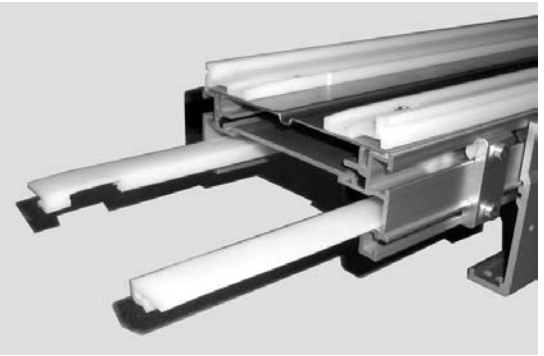

Figure 4

1. Locate conveyor sections (N Figure 5)

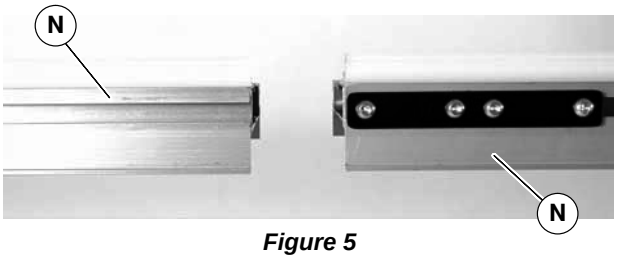

Figure 5

2. Join conveyor sections and install connector brackets (O of Figure 6) or connector/mount brackets (Q) and screws (P) on both sides as indicated.

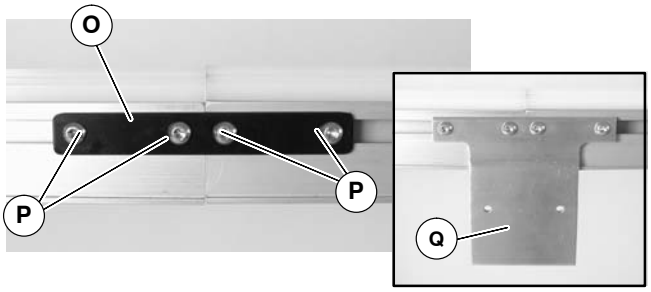

Figure 6

3. Snap the protruding return wear strip to the extrusion on the opposite side (R of Figure 7).

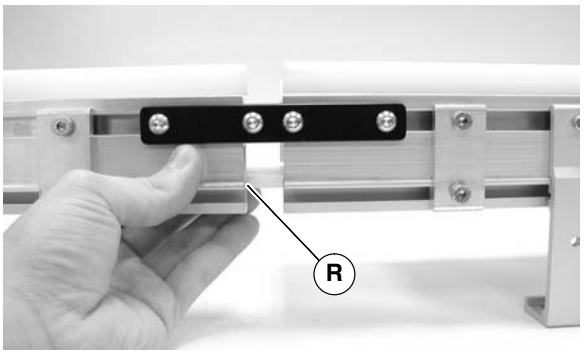

Figure 7

4. Tighten screw (P of Figure 6) to 7 N–m on both sides of conveyor.

Mounting Brackets

1. Locate brackets. Exploded views shown in Figures 8 & 9.

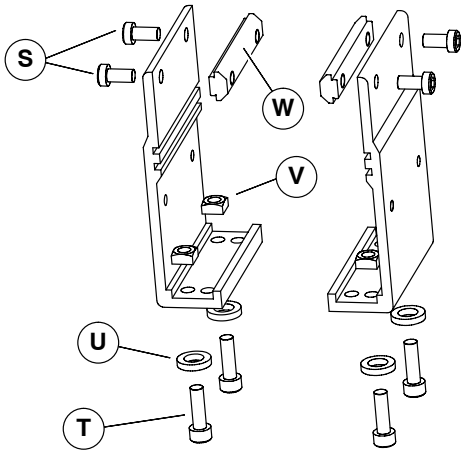

Mounting Brackets for Flat Belt Conveyor

Figure 8

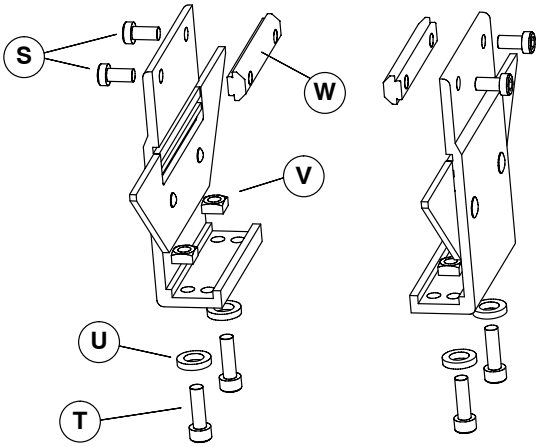

Mounting Brackets for Cleated Belt Conveyor

Figure 9

2. Remove screws (S & T of Figures 8 & 9), washers (U), nuts (V) and T-bars (W) from brackets.
3. Insert T-bars (W of Figures 8 & 9) into conveyor side slots (X of Figure 10). Fasten brackets (Y of Figure 10) to conveyor with mounting screws (S).

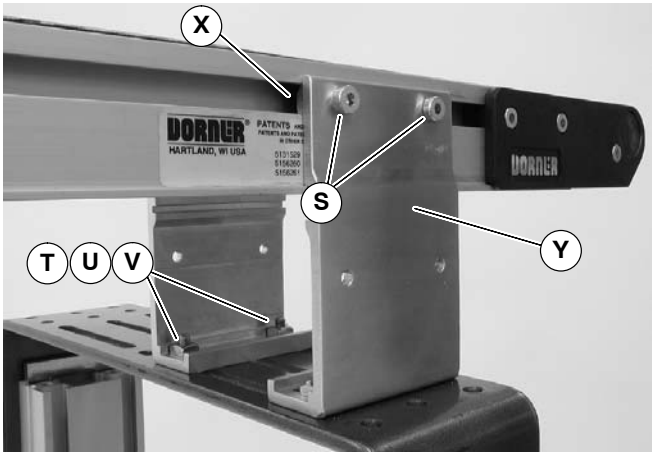

Figure 10

NOTE: Mounting brackets for flat belt conveyors shown.

4. Fasten brackets to support stand with mounting screws (T of Figure 10), washers (U) and nuts (V).
5. Tighten screws (S & T of Figure 10) to 7 N–m.

Installing Plastic Belt

NOTE: 438mm and 591mm wide plastic belt will correctly operate in one direction only. Ensure the belt is installed in the correct orientation. Refer to step 2 below for details.

1. Locate the conveyor belt retaining rod (Z of Figure 11) and belt end caps (AA).

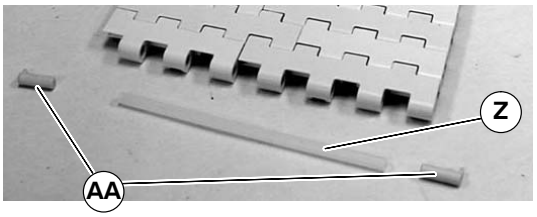

Figure 11

2. For 438mm wide and 591mm wide belts, align the belt to the retained center sprocket(AB of Figure 12) on the drive end of the conveyor.

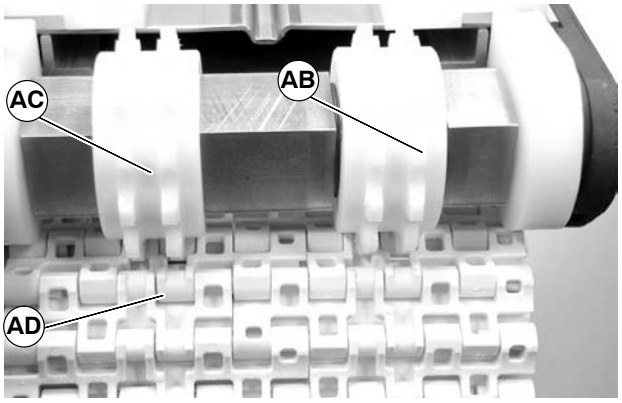

Figure 12

3. Feed belt into bottom wear strips (AE of Figure 13) and pull through to the far end.

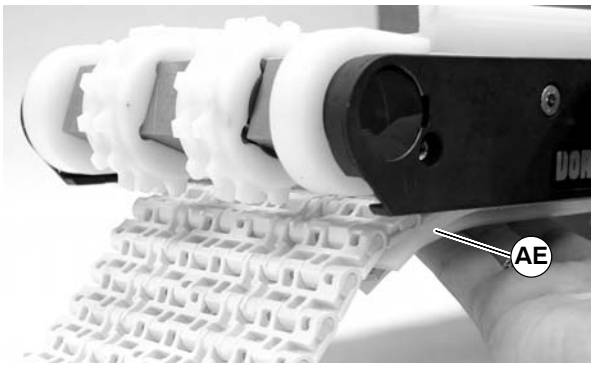

Figure 13

4. Aligning free moving sprocket(s)(AC of figure 12) to the drive pocket(s)(AD). Wrap belt around sprockets and pull towards idler end.
5. Repeat step 4 for the idler end of conveyor.
6. Splice the belt together by pushing the plastic rod (AF of Figure 14) through the side hole.

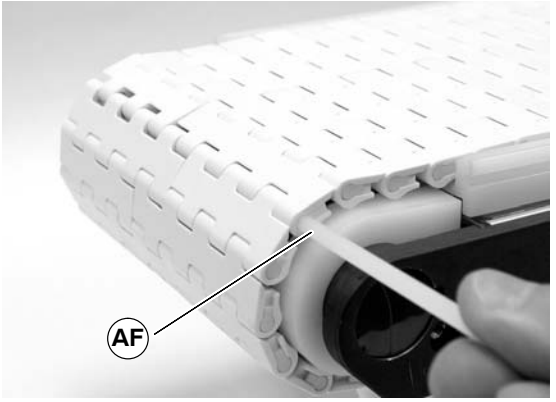

Figure 14

7. Insert rod retaining end caps (AG of figure 15) on both sides of belt.

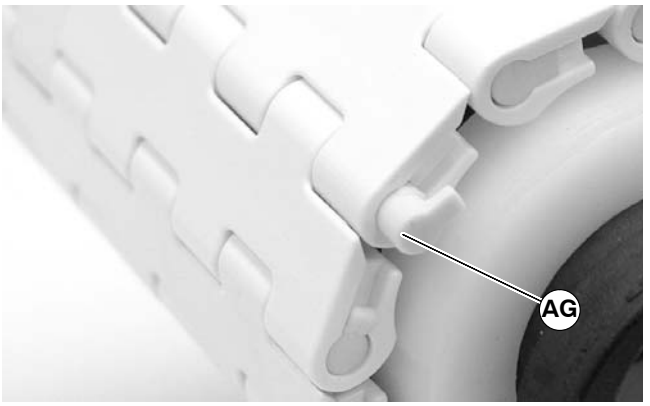

Figure 15

8. See “Conveyor Belt Tensioning” section on page 12 for details on belt tension.

Preventive Maintenance and Adjustment

Required Tools

Standard Tools

- Hex-key wrenches:
  2.5 mm, 4 mm, 5 mm
- 2.4 mm wide Flat Blade screw driver
- Arbor press
- Adjustable wrench to 25 mm wide

Special Tools

- 807–1078 Sealed Bearing Removal Tool
- 450292 Sealed Bearing Installation Tool

Checklist

- Keep service parts on hand (see “Service Parts” section for recommendations)
- Keep supply of belt cleaner (part # 625619)
- Clean entire conveyor while disassembled
- Replace worn or damaged parts

Lubrication

No lubrication is required. Replace bearings if worn.

Maintaining Conveyor Belt

Troubleshooting

Inspect conveyor belt for:

- Surface cuts or wear
- Tooth skipping
- Loose links

Surface cuts and wear indicate:

- Sharp or heavy parts impacting belt
- Jammed parts
- Foreign material inside the conveyor
- Improperly positioned accessories
- Bolt-on guiding is pinching belt

Stalling or skipping belt indicates:

- Belt stretching
- Conveyor belt or drive timing belt are not properly tensioned
- Worn sprocket or impacted dirt on drive pulley
- Intermittent jamming or drive train problems

NOTE: Visit www.dorner.com for complete list of troubleshooting solutions.

Cleaning

IMPORTANT: Do not use belt cleaners that contain alcohol, acetone, Methyl Ethyl Ketone (MEK) or other harsh chemicals.

Use Dorner Belt Cleaner (part # 625619). Mild soap and water may also be used. Do not soak the belt.

Conveyor Belt Replacement

WARNING

Exposed moving parts can cause severe injury.

LOCK OUT POWER before removing guards or performing maintenance.

Conveyor Belt Replacement Sequence

- Remove old conveyor belt
- Install new conveyor belt
- Tension conveyor belt

Belt Removal

1. On idler end of the conveyor identified with a label (AH of figure 16), loosen fastening screws (AI of figure 16) on both sides of conveyor. Push head plate assembly (AJ) inward.

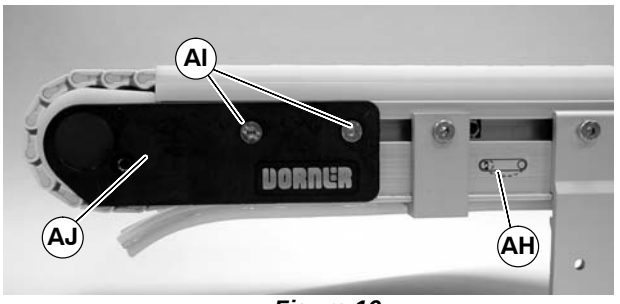

Figure 16

2. Choose one link on the idler end of chain to remove endcaps. With a 2.4 mm flat blade screwdriver, pry under tab of end caps (AK of Figure 17) and remove end cap. Repeat for opposite side of conveyor.

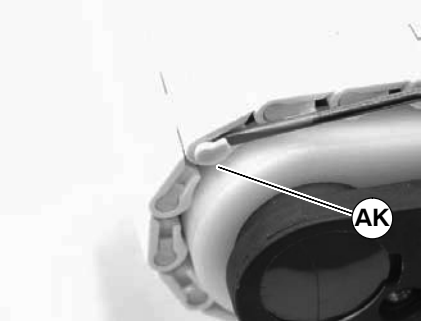

Figure 17

3. Insert screwdriver (AL of figure 18) into one side of belt, pushing rod (AM) out. Remove rod and separate belt.

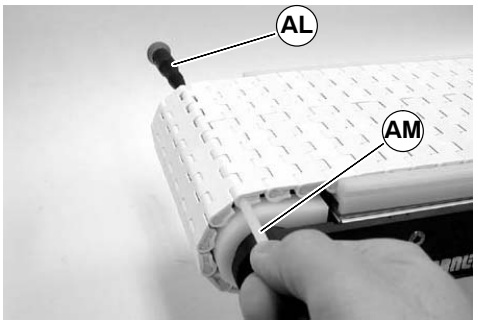

Figure 18

4. Pull back topside of belt to the drive end of the conveyor. See figure 19.

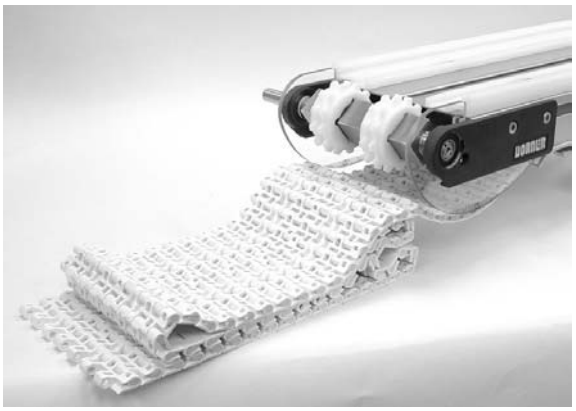

Figure 19

5. Remove belt by pulling belt out of bottom wear strips. See figure 20.

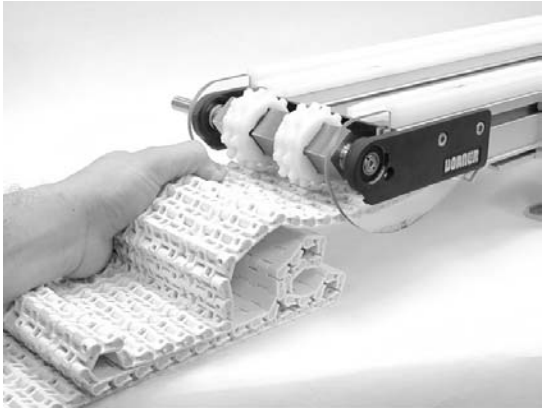

Figure 20

Belt Installation

1. See “Installing Plastic Belt” page 9.

Conveyor Belt Tensioning

WARNING

Exposed moving parts can cause severe injury.

LOCK OUT POWER before removing guards or performing maintenance.

NOTE: The MPB Series Plastic Belt Conveyor is designed to operate with minimal belt tension. The belt sag guard (AN of figure 21) provides information to the proper belt tension. Figure 21 indicates minimum belt sag. Figure 22 indicates maximum belt sag. Belt sag beyond that indicated in Figure 22 must be tensioned see below for details.

Figure 21

Figure 22

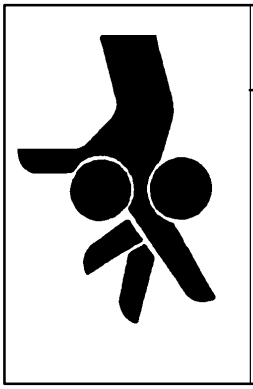

WARNING

Operating conveyor with belt sag beyond maximum shown in figure 22 will create belt pinch points which can cause injury.

TENSION CONVEYOR BELT IF MAXIMUM SAG IS REACHED

Belt tensioning may be done by two methods:

- A – Extending idler end
- B – Removal of belt links

A – Extending Idler End

1. On tension end of the conveyor, identified with a label (AH of Figure 23), on both sides of conveyor, loosen fastening screws (AI). Insert 5mm Hex wrench into pinion gear (AO) and rotate to extend head plate assembly(AH).

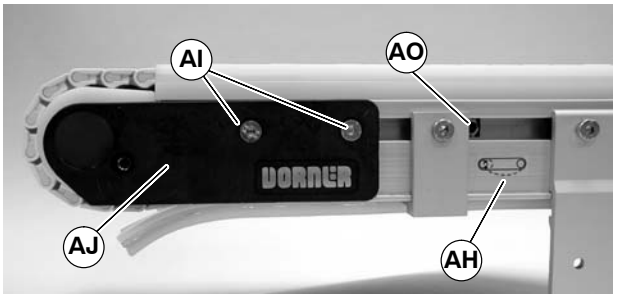

Figure 23

2. Extend head plate assembly so belt sag is between minimum shown in figure 21 and maximum shown in figure 22. If proper tensioning cannot be obtained before (AP of Figure 24) is even with the end of the conveyor frame (AQ), belt links must then be removed. See section “B Removal of Belt Links”.

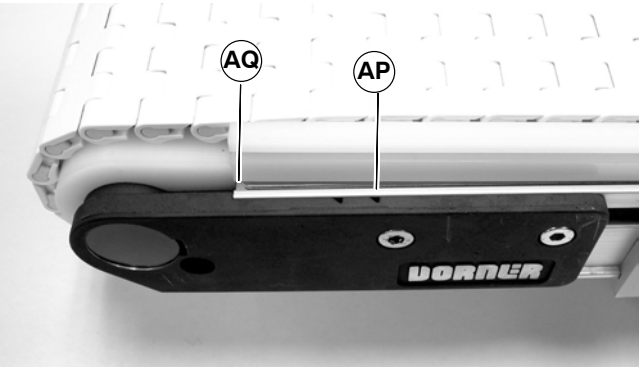

Figure 24

3. After adjusting proper tensioning, tighten fastening screws (AI of Figure 23) on both sides of conveyor to 7 N–m.

B – Removal of Belt Links

1. Choose one link on the idler end of chain to remove endcaps. With a 2.4 mm flat blade screwdriver, pry under tab of end caps (AK of Figure 25) and remove end cap. Repeat for opposite side of conveyor.

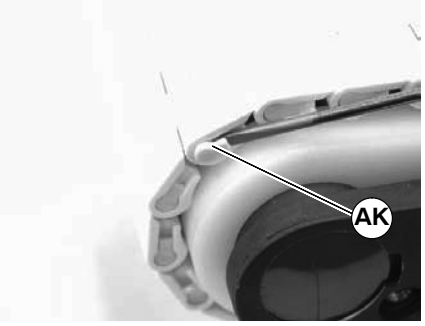

Figure 25

2. Insert screwdriver (AR of figure 26) into one side of belt, pushing rod (AS) out. Remove rod and separate belt.

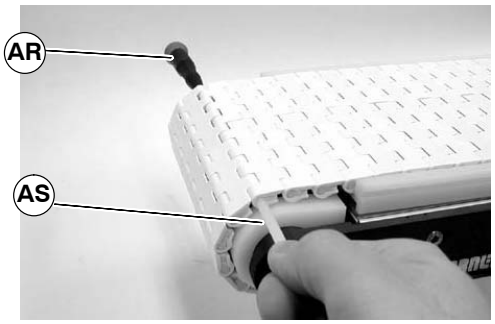

Figure 26

3. Determine the number of links to be removed. Start with 1 link and progress if additional tensioning is required repeat steps 1 and 2.
4. Splice the belt together by pushing the plastic rod (AF of Figure 27) through the side hole.

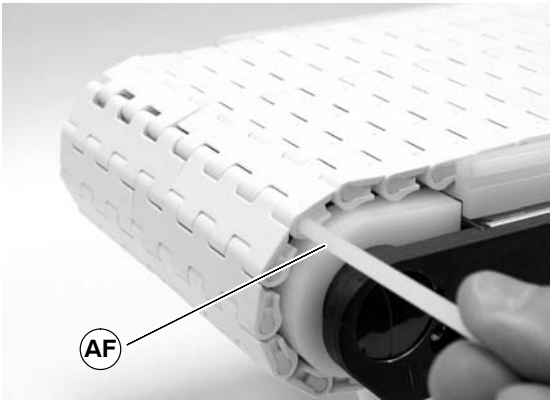

Figure 27

5. Insert rod retaining end caps (AG of figure 28) on both sides of belt.

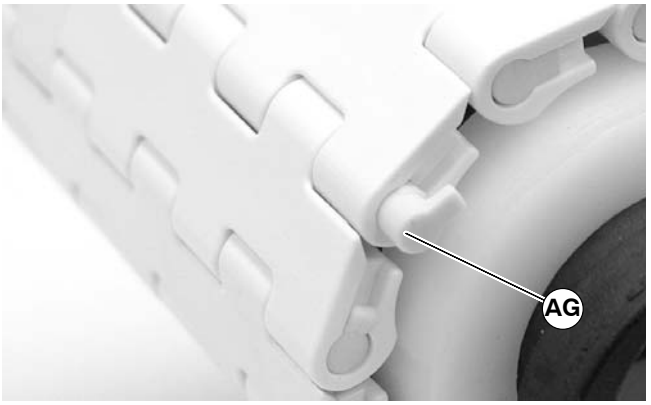

Figure 28

6. Review belt sag at drive end to ensure it is between minimum shown in figure 21 and maximum shown in figure 22. If additional tensioning is required repeat steps 1 through 5.

Pulley and Sprockets Removal

WARNING

Exposed moving parts can cause severe injury.

LOCK OUT POWER before removing guards or performing maintenance.

Remove conveyor belt to access pulley(s). See "Conveyor Belt Replacement" on page 10. Remove the desired pulley following the corresponding instructions below:

- A – Idler Pulley and Sprockets Removal
- B – Drive Pulley and Sprockets Removal

A – Idler Pulley and Sprockets Removal

1. On side of conveyor, loosen two (2) fastening screws (AI of Figure 29). Remove head plate and spindle at the same time.

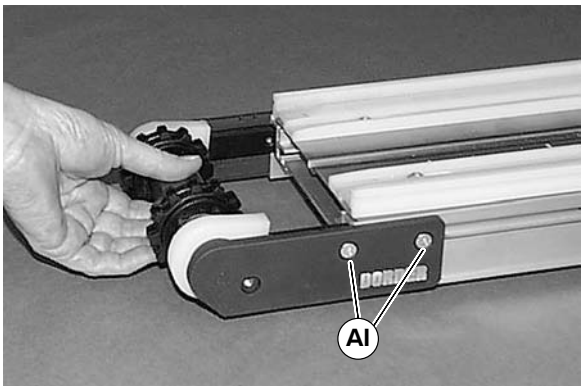

Figure 29

2. Slide idler end guard (AU of Figure 30) from ends of pulley (AT).

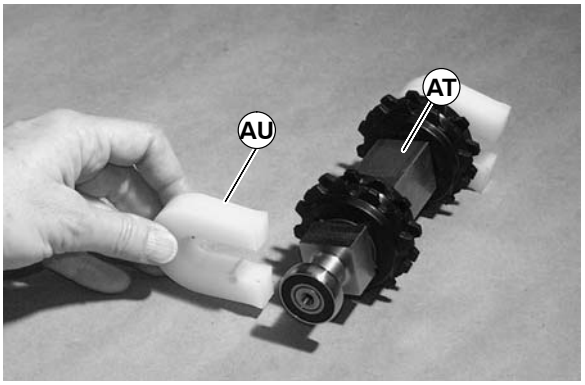

Figure 30

3. Slide free moving sprocket(s) (AV of Figure 31) off the end of pulley (AT).

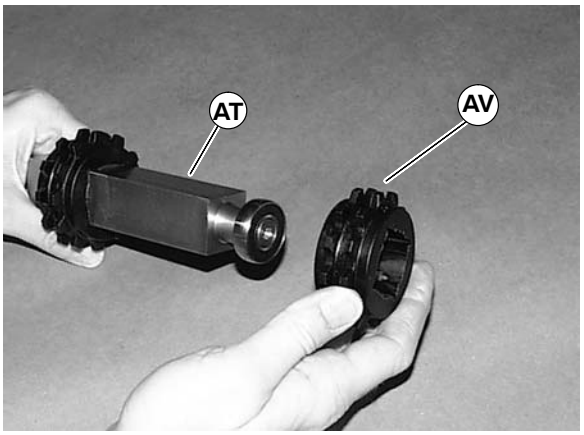

Figure 31

4. Remove snap rings (AW of Figure 32). Slide drive sprocket (AX) off the end of pulley (AT).

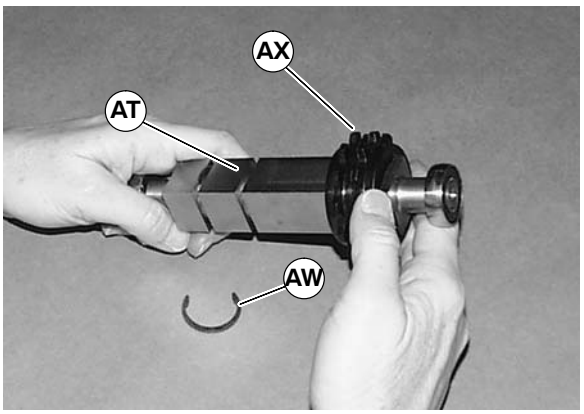

Figure 32

B – Drive Pulley and Sprockets Removal

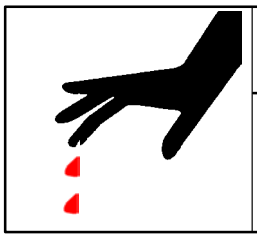

WARNING

Drive shaft keyway may be sharp.

HANDLE WITH CARE.

1. On side of conveyor, loosen two (2) fastening screws (AY of Figure 33). Remove head plate and spindle at same time.

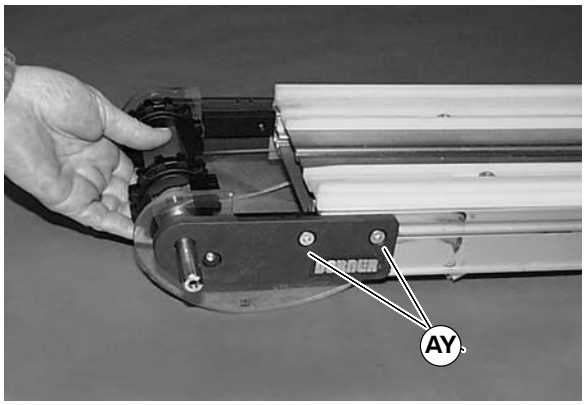

Figure 33

2. Slide free moving sprocket(s) (BA of Figure 34) off the end of pulley (AZ).

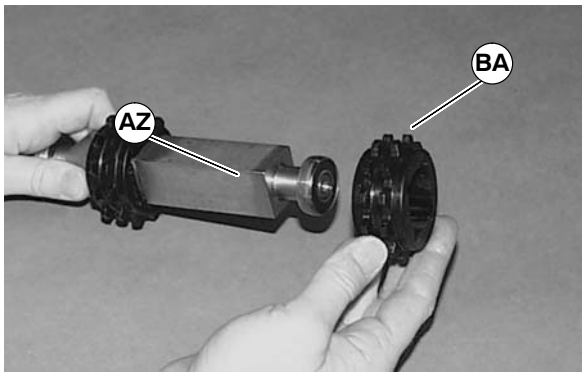

Figure 34

3. Remove snap rings (BB of Figure 35). Slide drive sprocket (BC) off the end of pulley (AZ).

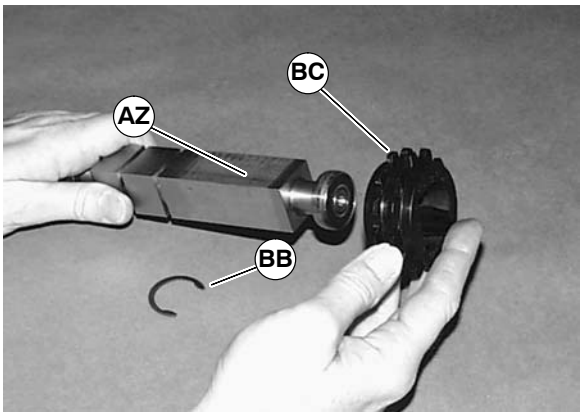

Figure 35

Bearing Removal & Replacement

WARNING

Exposed moving parts can cause severe injury.

LOCK OUT POWER before removing guards or performing maintenance.

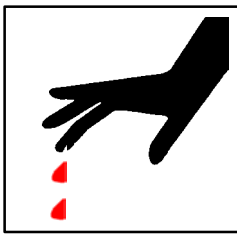

WARNING

Drive shaft keyway may be sharp.

HANDLE WITH CARE.

Removal

1. Remove idler pulley or drive pulley. For idler pulley see section “A – Idler Pulley and Sprockets Removal,” steps 1 through 4. For drive pulley see section “B – Drive Pulley and Sprockets Removal,” steps 1 through 3.

2. Use bearing removal tool (807-1078) (BD of Figure 36) to remove bearings from idler and drive pulleys.

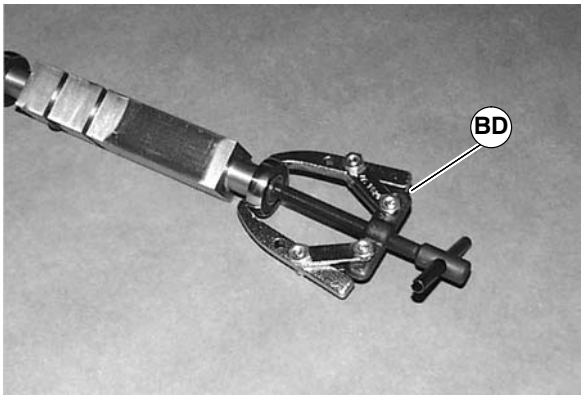

Figure 36

Replacement

1. Inspect head plate bearing surface. If worn or damaged, replace head plate. See “Service Parts” on page 20.

Pulley and Sprockets Replacement

Drive Pulley and Sprockets

1. Press bearing onto drive pulley using installation tool 456085 (BE of Figure 37).

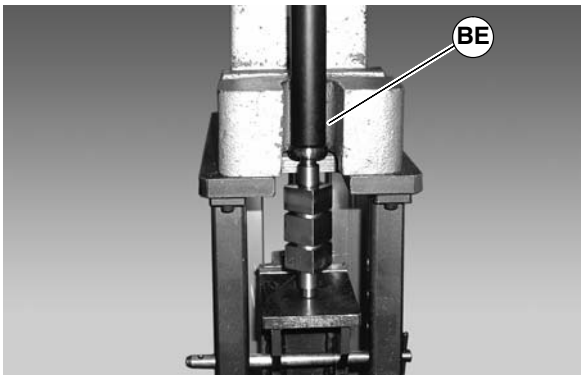

Figure 37

2. Install drive sprocket (BC of Figure 38) with snap rings (BB) to pulley (AZ).

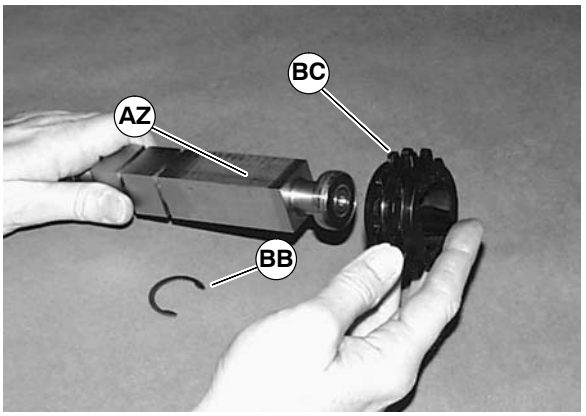

Figure 38

3. As required, install free moving sprockets as per Figure 39. Items in bold are the fixed drive sprockets.

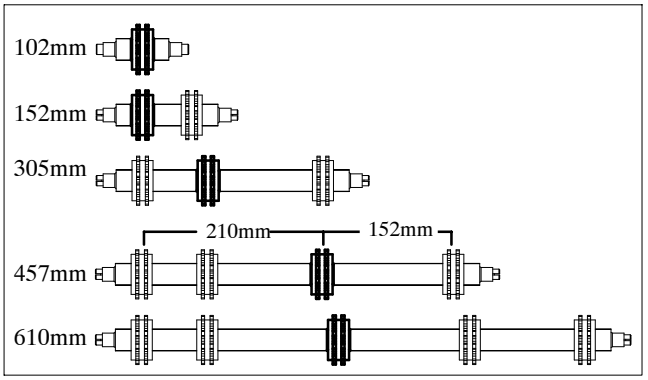

Figure 39

4. Install pulley assembly on conveyor. Slide spindle into installed head plate (Figure 40).

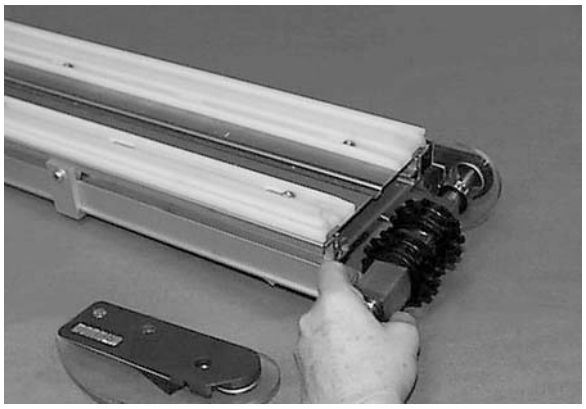

Figure 40

5. Slide remaining head plate on to end of spindle and tighten fastening screws (AY of Figure 41) to 7 N–m.

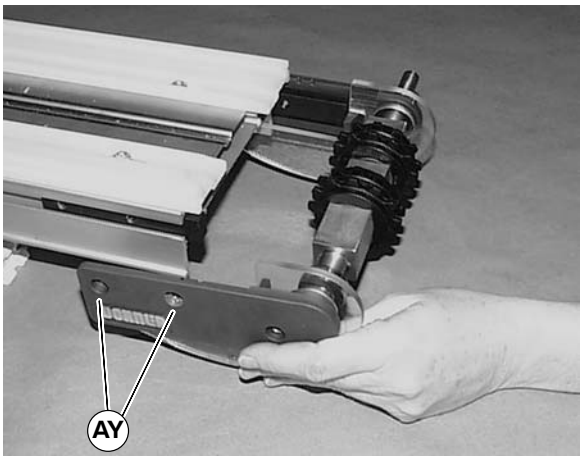

Figure 41

Idler Pulley and Sprockets

1. Install drive sprocket (AX of Figure 42) with snap rings (AW) to pulley (AT).

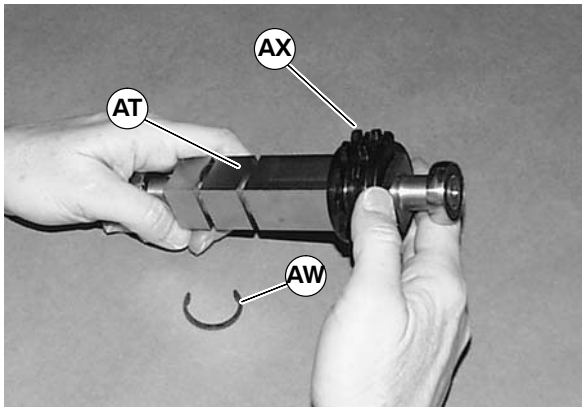

Figure 42

2. As required, install free moving sprockets as per Figure 43. Items in bold are the fixed drive sprockets.

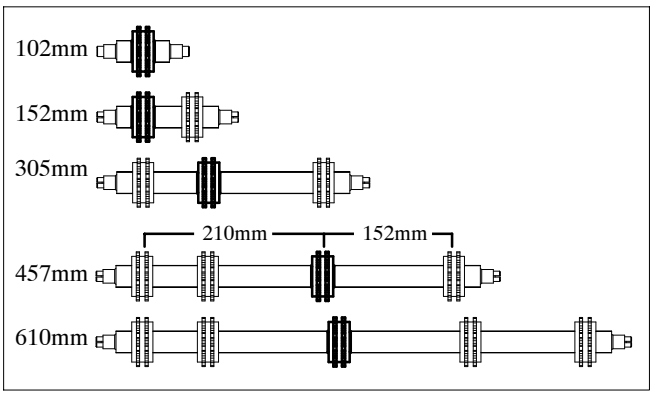

Figure 43

3. Install pulley assembly on conveyor. Slide spindle into installed head plate (Figure 44).

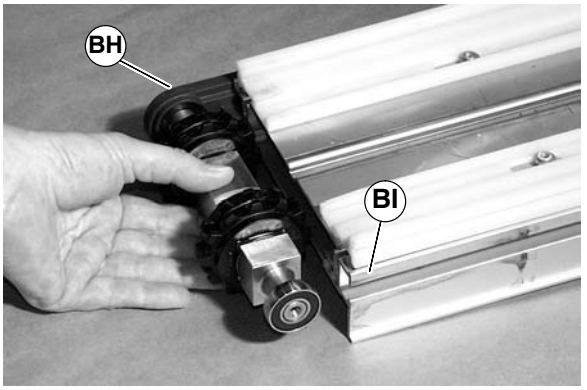

Figure 44

4. Slide remaining head plate on to end of spindle and tighten fastening screws (AI of Figure 45) to 7 N-M.

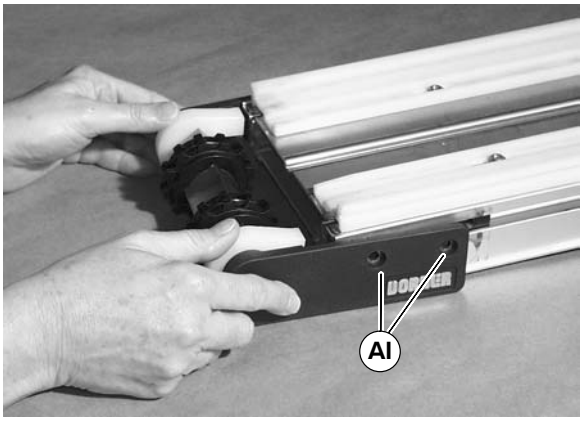

Figure 45

Upper Wear Strip Replacement

WARNING

Exposed moving parts can cause severe injury.

LOCK OUT POWER before removing guards or performing maintenance.

1. Remove conveyor belt. See “Belt Removal” section on page 10.
2. With a T–20 Torx head wrench, remove screw (BJ of Figure 46) and bushings (BK).

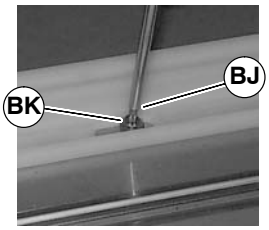

Figure 46

3. Remove old wear strip (Figure 47).

Figure 47

4. Install new wear strip (Figure 48), with bushings (BK) and screws (BJ). Tighten screws to 2.8 N-m.

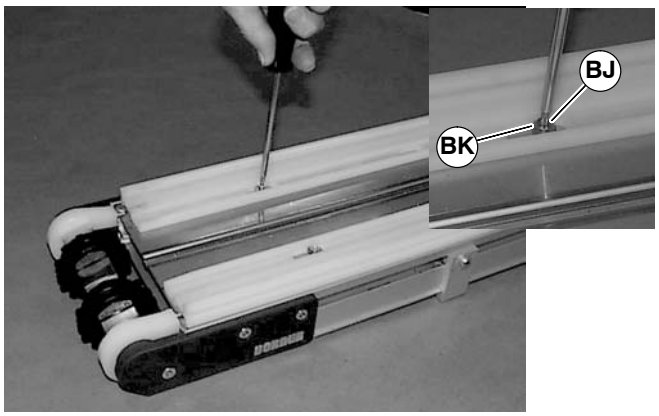

Figure 48

Return Wear Strip Replacement

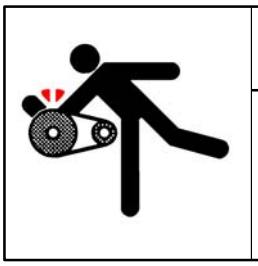

WARNING

Exposed moving parts can cause severe injury.

LOCK OUT POWER before removing guards or performing maintenance.

1. Remove old wear strip (BL) by sliding off of support extrusion (BM of Figure 50).

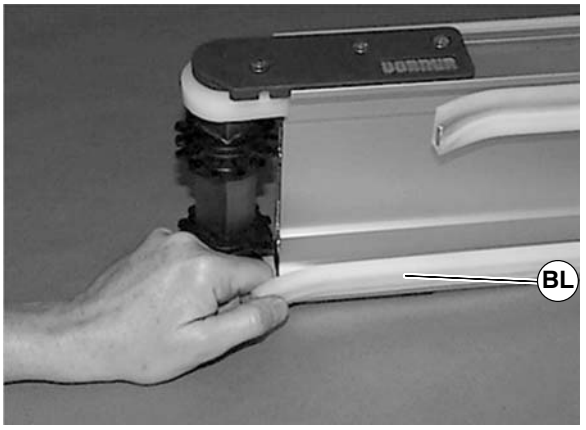

Figure 49

2. Install new wearstrip onto support extrusion (BM).

Figure 50

Notes

Service Parts

NOTE: For replacement parts other than those shown in this section, contact an authorized Dorner Service Center or the factory. Key Service Parts and Kits are identified by the Performance Parts Kits logo. Dorner recommends keeping these parts on hand.

102mm and 152mm Wide Conveyor Assembly

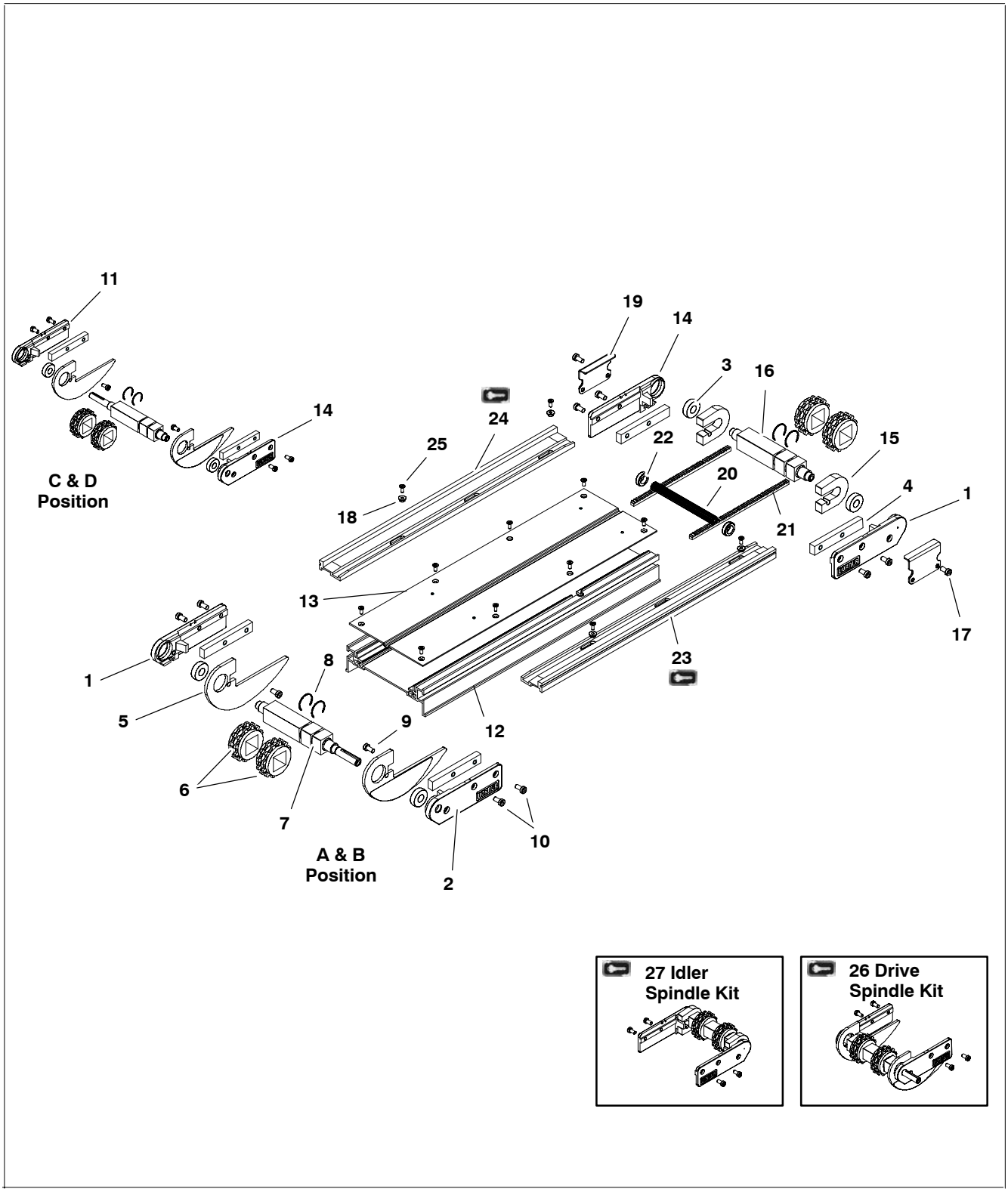

Item	Part Number	Description
1	240426	Head Plate RH
2	240427	Head Plate LH Drive Side, Position A and B
3	240328	Bearing
4	240329	Tension Slide Bar
5	245858	Sag Guard
6	245863	Sprocket
7	2475WW	Drive Spindle
8	807–1108	Retaining Ring
9	920691M	Socket Head Screw M6 x 10mm
10	920692M	Socket Head Screw M6 x 12mm
11	240428	Head Plate RH Drive Side, Position C and D
12	See Chart Below	Conveyor Frame
13	See Chart Below	Bed Plate
14	240425	Head Plate LH
15	245850	Pinch Guard Plate
16	2474WW	Idler Spindle
17	920694M	Socket Head Screw M6 x 20mm
18	245854	Screw Sleeve
19	245625	Gap Guard Clip
20	2030WWM	Gear Pinion
21	240420	Rack Gear 14.5 Degree PA x 24 P
22	240421	Pinion Bushing
23	245827–LLLL	LH Outer Wear Strip – UHMW
	245828–LLLL	LH Outer Wear Strip – Antistat
24	245829–LLLL	RH Outer Wear Strip – UHMW
	245830–LLLL	RH Outer Wear Strip – Antistat
25	807–1105	Torx, Flat Head M4 x 10mm
26	MPBA–WW	Drive Spindle Kit, Position A and B (Includes Items 1, 2, 3, and 5 through 10)
	MPBD–WW	Drive Spindle Kit, Position C and D (Includes Items 3, 5 through 11 and 14)
27	MPBT–WW	Idler Spindle Kit (Includes Items 1, 3, 6, 8, 10, and 14 through 17)
WW = Conveyor width reference: 04, 06		

Item 12: Conveyor Frame		
Length	Part Number	
610mm	2404WW–01900	
914mm	2404WW–03100	
1219mm	2404WW–04300	
1524mm	2404WW–05500	
1829mm	2404WW–06700	
2134mm	2404WW–07900	
2438mm	2404WW–09100	
2743mm	2404WW–10300	
3048mm	2404WW–11500	
3353mm	2404WW–12700	
3658mm	2404WW–13900	
3962mm	2404WW–07200	2404WW–07900
4267mm	2404WW–07200	2404WW–09100
4572mm	2404WW–07200	2404WW–10300
4877mm	2404WW–07200	2404WW–11500
5182mm	2404WW–07200	2404WW–12700
5486mm	2404WW–07200	2404WW–13900
5791mm	2404WW–07900	2404WW–14400
6096mm	2404WW–09100	2404WW–14400
6401mm	2404WW–10300	2404WW–14400
6706mm	2404WW–11500	2404WW–14400
7010mm	2404WW–12700	2404WW–14400
7315mm	2404WW–13900	2404WW–14400
7620mm	2404WW–07900 2404WW–07200	 2404WW–14400
7925mm	2404WW–09100 2404WW–07200	 2404WW–14400
8230mm	2404WW–10300 2404WW–07200	 2404WW–14400
8534mm	2404WW–11500 2404WW–07200	 2404WW–14400
8839mm	2404WW–12700 2404WW–07200	 2404WW–14400
9144mm	2404WW–13900 2404WW–07200	 2404WW–14400
WW = Conveyor width reference: 04, 06		

Service Parts

Item 13: Bed Plate	
Length	Part Number
610mm	2452WW–01892
914mm	2452WW–03092
1219mm	2452WW–04292
1524mm	2452WW–05492
1829mm	2452WW–06692
2134mm	2452WW–07892
2438mm	2452WW–09092
2743mm	2452WW–10292
3048mm	2452WW–11492
3353mm	2452WW–12692
3658mm	2452WW–13892
3962mm	2452WW–07196 2452WW–07892
4267mm	2452WW–07196 2452WW–09092
4572mm	2452WW–07196 2452WW–10292
4877mm	2452WW–07196 2452WW–11492
5182mm	2452WW–07196 2452WW–12692
5486mm	2452WW–07196 2452WW–13892
5791mm	2452WW–07892 2452WW–14396
6096mm	2452WW–09092 2452WW–14396
6401mm	2452WW–10292 2452WW–14396
6706mm	2452WW–11492 2452WW–14396
7010mm	2452WW–12692 2452WW–14396
7315mm	2452WW–13892 2452WW–14396
7620mm	2452WW–07892 2452WW–07196 2452WW–14396
7925mm	2452WW–09092 2452WW–07196 2452WW–14396
8230mm	2452WW–10292 2452WW–07196 2452WW–14396
8534mm	2452WW–11492 2452WW–07196 2452WW–14396
8839mm	2452WW–12692 2452WW–07196 2452WW–14396
9144mm	2452WW–13892 2452WW–07196 2452WW–14396
WW = Conveyor Width reference: 04, 06	

305mm Wide Conveyor Assembly

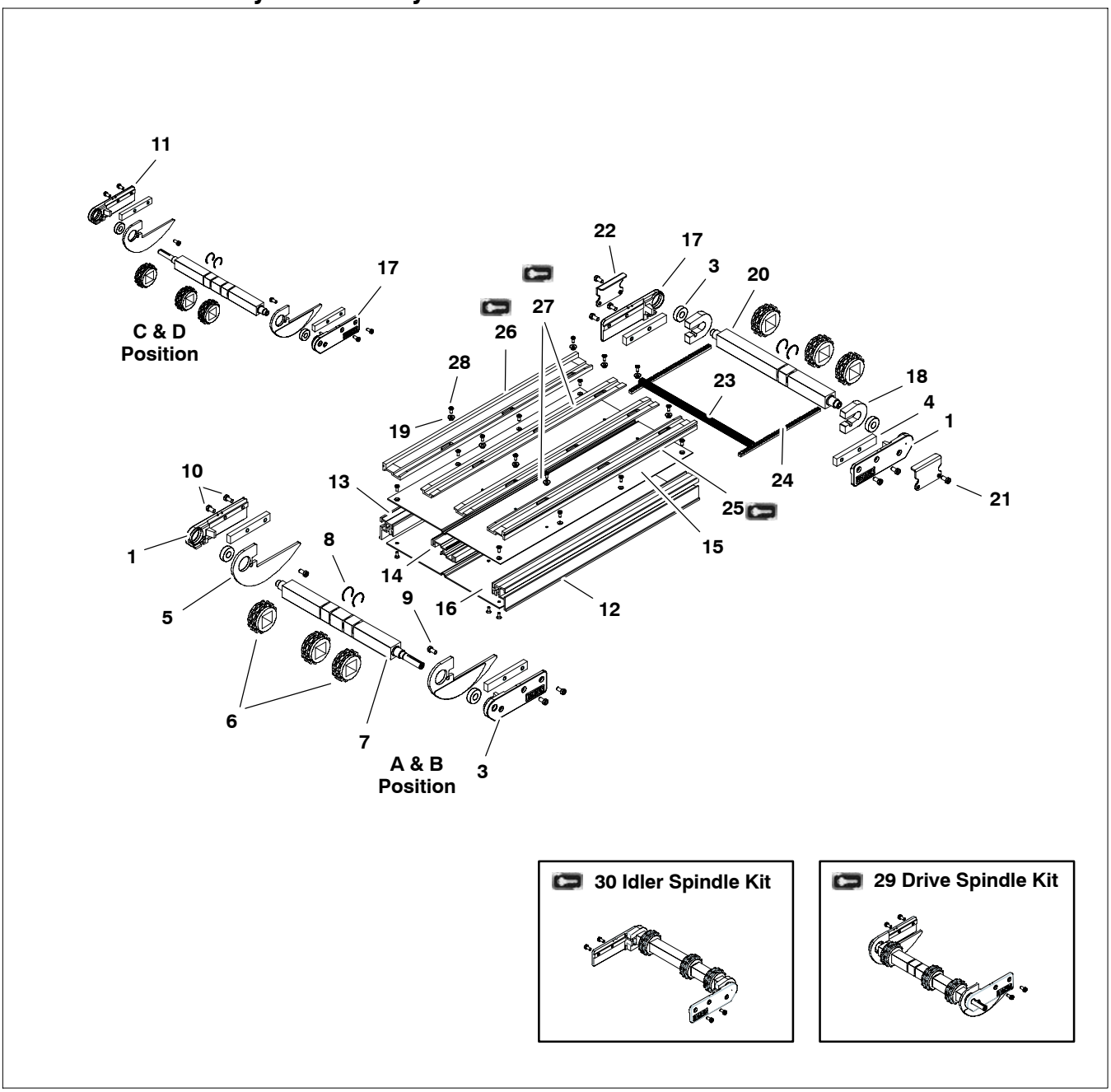

Item	Part Number	Description
1	240426	Head Plate RH
2	240427	Head Plate LH Drive Side, Position A and B
3	240328	Bearing
4	240329	Tension Slide Bar
5	245858	Sag Guard
6	245863	Sprocket
7	247512	Drive Spindle
8	807–1108	Retaining Ring

9	920691M	Socket Head Screw M6 x 10mm
10	920692M	Socket Head Screw M6 x 12mm
11	240428	Head Plate RH Drive Side, Position C and D
12	See Chart Below	Side Rail RH
13	See Chart Below	Side Rail LH
14	See Chart Below	Center Rail

15	See Chart Below	Bed Plate Top
16	See Chart Below	Bed Plate Bottom
17	240425	Head Plate LH
18	245850	Pinch Guard Plate
19	245854	Screw Sleeve
20	247412	Idler Spindle
21	920693M	Socket Head Screw M6 x 16mm
22	245625	Gap Guard Clip
23	203012M	Gear Pinion
24	240420	Rack Gear 14.5 Degree PA x 24 P
25	245827–LLLL	LH Outer Wear Strip – UHMW
	245828–LLLL	LH Outer Wear Strip – Antistat
26	245829–LLLL	RH Outer Wear Strip – UHMW
	245830–LLLL	RH Outer Wear Strip – Antistat
27	245831–LLLL	Center Wear Strips – UHMW
	245832–LLLL	Center Wear Strips – Antistat
28	807–1105	Torx, Flat Head M4 x 10mm
29	MPBA–12	Drive Spindle Kit, Position A and B (Includes Items 1, 2, 3, and 5 through 10)
	MPBD–12	Drive Spindle Kit, Position C and D (Includes Items 3, 5 through 11 and 17)
30	MPBT–12	Idler Spindle Kit (Includes Items 1, 3, 6, 8, 10, and 17 through 20)

Item 12: Side Rail RH 305mm Wide	
Length	Part Number
610mm	240412–01900
914mm	240412–03100
1219mm	240412–04300
1524mm	240412–05500
1829mm	240412–06700
2134mm	240412–07900
2438mm	240412–09100
2743mm	240412–10300
3048mm	240412–11500
3353mm	240412–12700
3658mm	240412–13900
3962mm	240412–07200 240412–07900
4267mm	240412–07200 240412–09100
4572mm	240412–07200 240412–10300
4877mm	240412–07200 240412–11500
5182mm	240412–07200 240412–12700
5486mm	240412–07200 240412–13900
5791mm	240412–07900 240412–14400
6096mm	240412–09100 240412–14400
6401mm	240412–10300 240412–14400
6706mm	240412–11500 240412–14400
7010mm	240412–12700 240412–14400
7315mm	240412–13900 240412–14400
7620mm	240412–07900 240412–07200 240412–14400
7925mm	240412–09100 240412–07200 240412–14400
8230mm	240412–10300 240412–07200 240412–14400
8534mm	240412–11500 240412–07200 240412–14400
8839mm	240412–12700 240412–07200 240412–14400
9144mm	240412–13900 240412–07200 240412–14400

Item 13: Side Rail LH 305mm Wide	
Length	Part Number
610mm	240413–01900
914mm	240413–03100
1219mm	240413–04300
1524mm	240413–05500
1829mm	240413–06700
2134mm	240413–07900
2438mm	240413–09100
2743mm	240413–10300
3048mm	240413–11500
3353mm	240413–12700
3658mm	240413–13900
3962mm	240413–07200 240413–07900
4267mm	240413–07200 240413–09100
4572mm	240413–07200 240413–10300
4877mm	240413–07200 240413–11500
5182mm	240413–07200 240413–12700
5486mm	240413–07200 240413–13900
5791mm	240413–07900 240413–14400
6096mm	240413–09100 240413–14400
6401mm	240413–10300 240413–14400
6706mm	240413–11500 240413–14400
7010mm	240413–12700 240413–14400
7315mm	240413–13900 240413–14400
7620mm	240413–07900 240413–07200 240413–14400
7925mm	240413–09100 240413–07200 240413–14400
8230mm	240413–10300 240413–07200 240413–14400

8534mm	240413–11500 240413–07200 240413–14400
8839mm	240413–12700 240413–07200 240413–14400
9144mm	240413–13900 240413–07200 240413–14400

Item 14: Center Rail 305mm Wide	
Length	Part Number
610mm	240414–01273
914mm	240414–02473
1219mm	240414–03673
1524mm	240414–04873
1829mm	240414–06073
2134mm	240414–07273
2438mm	240414–08473
2743mm	240414–09673
3048mm	240414–10873
3353mm	240414–12073
3658mm	240414–13273
3962mm	240414–07200 240414–07273
4267mm	240414–07200 240414–08473
4572mm	240414–07200 240414–09673
4877mm	240414–07200 240414–10873
5182mm	240414–07200 240414–12073
5486mm	240414–07200 240414–13273
5791mm	240414–07273 240414–14400
6096mm	240414–08473 240414–14400
6401mm	240414–09673 240414–14400
6706mm	240414–10873 240414–14400
7010mm	240414–12073 240414–14400
7315mm	240414–13273 240414–14400
7620mm	240414–07273 240414–07200 240414–14400
7925mm	240414–08473 240414–07200 240414–14400
8230mm	240414–09673 240414–07200 240414–14400
8534mm	240414–10873 240414–07200 240414–14400
8839mm	240414–12073 240414–07200 240414–14400
9144mm	240414–13273 240414–07200 240414–14400

Item 15: Bed Plate Top	
Length	Part Number
610mm	2452WW–01892
914mm	2452WW–03092
1219mm	2452WW–04292
1524mm	2452WW–05492
1829mm	2452WW–06692
2134mm	2452WW–07892
2438mm	2452WW–09092
2743mm	2452WW–10292
3048mm	2452WW–11492
3353mm	2452WW–12692
3658mm	2452WW–13892
3962mm	2452WW–07196 2452WW–07892
4267mm	2452WW–07196 2452WW–09092
4572mm	2452WW–07196 2452WW–10292
4877mm	2452WW–07196 2452WW–11492
5182mm	2452WW–07196 2452WW–12692
5486mm	2452WW–07196 2452WW–13892
5791mm	2452WW–07892 2452WW–14396
6096mm	2452WW–09092 2452WW–14396
6401mm	2452WW–10292 2452WW–14396
6706mm	2452WW–11492 2452WW–14396
7010mm	2452WW–12692 2452WW–14396
7315mm	2452WW–13892 2452WW–14396
7620mm	2452WW–07892 2452WW–07196 2452WW–14396
7925mm	2452WW–09092 2452WW–07196 2452WW–14396
8230mm	2452WW–10292 2452WW–07196 2452WW–14396
8534mm	2452WW–11492 2452WW–07196 2452WW–14396
8839mm	2452WW–12692 2452WW–07196 2452WW–14396
9144mm	2452WW–13892 2452WW–07196 2452WW–14396
WW = Conveyor Width reference: 12	

Item 16: Bed Plate Bottom	
Length	Part Number
610mm	2405WW–01892
914mm	2405WW–03092
1219mm	2405WW–04292
1524mm	2405WW–05492
1829mm	2405WW–06692
2134mm	2405WW–07892
2438mm	2405WW–09092
2743mm	2405WW–10292
3048mm	2405WW–11492
3353mm	2405WW–12692
3658mm	2405WW–13892
3962mm	2405WW–07196 2405WW–07892
4267mm	2405WW–07196 2405WW–09092
4572mm	2405WW–07196 2405WW–10292
4877mm	2405WW–07196 2405WW–11492
5182mm	2405WW–07196 2405WW–12692
5486mm	2405WW–07196 2405WW–13892
5791mm	2405WW–07892 2405WW–14396
6096mm	2405WW–09092 2405WW–14396
6401mm	2405WW–10292 2405WW–14396
6706mm	2405WW–11492 2405WW–14396
7010mm	2405WW–12692 2405WW–14396
7315mm	2405WW–13892 2405WW–14396
7620mm	2405WW–07892 2405WW–07196 2405WW–14396
7925mm	2405WW–09092 2405WW–07196 2405WW–14396
8230mm	2405WW–10292 2405WW–07196 2405WW–14396
8534mm	2405WW–11492 2405WW–07196 2405WW–14396
8839mm	2405WW–12692 2405WW–07196 2405WW–14396
9144mm	2405WW–13892 2405WW–07196 2405WW–14396
WW = Conveyor Width reference: 12	

457mm and 610mm Wide Conveyor Assembly

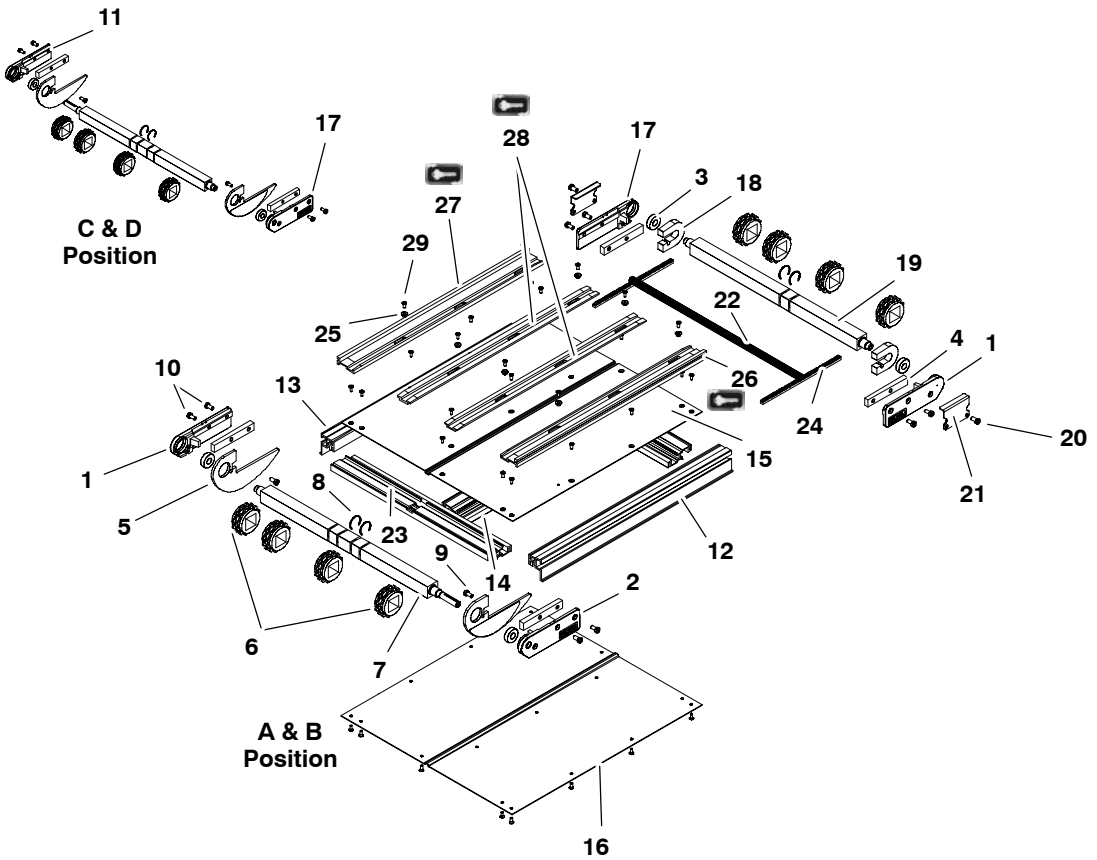

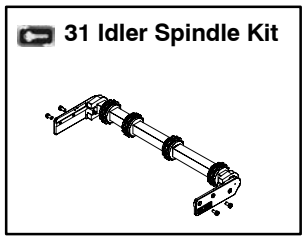

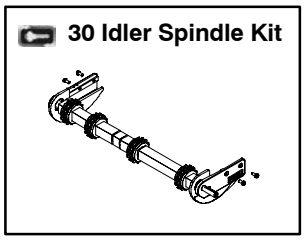

Item	Part Number	Description
1	240426	Head Plate RH
2	240427	Head Plate LH Drive Side, Position A and B
3	240328	Bearing
4	240329	Tension Slide Bar
5	245858	Sag Guard
6	245863	Sprocket
7	2475WW	Drive Spindle
8	807–1108	Retaining Ring

9	920691M	Socket Head Screw M6 x 10mm
10	920692M	Socket Head Screw M6 x 12mm
11	240428	Head Plate RH Drive Side, Position C and D
12	See Chart Below	Side Rail RH
13	See Chart Below	Side Rail LH
14	See Chart Below	Center Rail

15	See Chart Below	Bed Plate Top
16	See Chart Below	Bed Plate Bottom
17	240425	Head Plate LH
18	245850	Pinch Guard Plate
19	2474WW	Idler Spindle
20	920693M	Socket Head Screw M6 x 16mm
21	245625	Gap Guard Clip
22	2030WWM	Gear Pinion
23	240417	Center Rail Cross Support 18" (457mm)
	240419	Center Rail Cross Support 24" (610mm)
24	240420	Rack Gear 14.5 Degree PA x 24 P
25	245854	Screw Sleeve
26	245827–LLLL	LH Outer Wear Strip – UHMW
	245828–LLLL	LH Outer Wear Strip – Antistat
27	245829–LLLL	RH Outer Wear Strip – UHMW
	245830–LLLL	RH Outer Wear Strip – Antistat
28	245831–LLLL	Center Wear Strips – UHMW
	245832–LLLL	Center Wear Strips – Antistat
29	807–1105	Torx, Flat Head M4 x 10mm
30	MPBA–WW	Drive Spindle Kit, Position A and B (Includes Items 1, 2, 3, and 5 through 10)
	MPBD–WW	Drive Spindle Kit, Position C and D (Includes Items 3, 5 through 11 and 17)
31	MPBT–WW	Idler Spindle Kit (Includes Items 1, 3, 6, 8, 10, and 17 through 20)
WW = Conveyor width reference: 18, 24		

Item 12: Side Rail RH 457mm and 610mm Wide	
Length	Part Number
610mm	240412–01900
914mm	240412–03100
1219mm	240412–04300
1524mm	240412–05500
1829mm	240412–06700
2134mm	240412–07900
2438mm	240412–09100
2743mm	240412–10300
3048mm	240412–11500
3353mm	240412–12700
3658mm	240412–13900
3962mm	240412–07200 240412–07900
4267mm	240412–07200 240412–09100
4572mm	240412–07200 240412–10300
4877mm	240412–07200 240412–11500
5182mm	240412–07200 240412–12700
5486mm	240412–07200 240412–13900
5791mm	240412–07900 240412–13900
6096mm	240412–09100 240412–13900
6401mm	240412–10300 240412–13900
6706mm	240412–11500 240412–13900
7010mm	240412–12700 240412–13900
7315mm	240412–13900 240412–13900
7620mm	240412–07900 240412–07200 240412–13900
7925mm	240412–09100 240412–07200 240412–13900
8230mm	240412–10300 240412–07200 240412–13900
8534mm	240412–11500 240412–07200 240412–13900
8839mm	240412–12700 240412–07200 240412–13900
9144mm	240412–13900 240412–07200 240412–13900

Item 13: Side Rail LH 457mm and 610mm Wide	
Length	Part Number
610mm	240413–01900
914mm	240413–03100
1219mm	240413–04300
1524mm	240413–05500
1829mm	240413–06700
2134mm	240413–07900
2438mm	240413–09100
2743mm	240413–10300
3048mm	240413–11500
3353mm	240413–12700
3658mm	240413–13900
3962mm	240413–07200 240413–07900
4267mm	240413–07200 240413–09100
4572mm	240413–07200 240413–10300
4877mm	240413–07200 240413–11500
5182mm	240413–07200 240413–12700
5486mm	240413–07200 240413–13900
5791mm	240413–07908 240413–13900
6096mm	240413–09108 240413–13900
6401mm	240413–10308 240413–13900
6706mm	240413–11508 240413–13900
7010mm	240413–12708 240413–13900
7315mm	240413–13908 240413–13900
7620mm	240413–07900 240413–07200 240413–13900
7925mm	240413–09100 240413–07200 240413–13900

8230mm	240413–10300 240413–07200 240413–13900
8534mm	240413–11500 240413–07200 240413–13900
8839mm	240413–12700 240413–07200 240413–13900
9144mm	240413–13900 240413–07200 240413–13900

Item 14: Center Rail 457mm–610mm Wide	
Length	Part Number
610mm	240414–00990
914mm	240414–02190
1219mm	240414–03390
1524mm	240414–04490
1829mm	240414–05790
2134mm	240414–06990
2438mm	240414–08190
2743mm	240414–09390
3048mm	240414–10590
3353mm	240414–11790
3658mm	240414–12990
3962mm	240414–06700 240414–06990
4267mm	240414–06700 240414–08190
4572mm	240414–06700 240414–09390
4877mm	240414–06700 240414–10590
5182mm	240414–06700 240414–11790
5486mm	240414–06700 240414–12990
5791mm	240414–06990 240414–13900
6096mm	240414–08190 240414–13900
6401mm	240414–09390 240414–13900
6706mm	240414–10590 240414–13900
7010mm	240414–11790 240414–13900
7315mm	240414–12990 240414–13900
7620mm	240414–06990 240414–06700 240414–13900
7925mm	240414–08190 240414–06700 240414–13900
8230mm	240414–09390 240414–06700 240414–13900
8534mm	240414–10590 240414–06700 240414–13900
8839mm	240414–11790 240414–06700 240414–13900
9144mm	240414–12990 240414–06700 240414–13900

Item 15: Bed Plate Top	
Length	Part Number
610mm	2452WW–01892
914mm	2452WW–03092
1219mm	2452WW–04292
1524mm	2452WW–05492
1829mm	2452WW–06692
2134mm	2452WW–07892
2438mm	2452WW–09092
2743mm	2452WW–10292
3048mm	2452WW–11492
3353mm	2452WW–12692
3658mm	2452WW–13892
3962mm	2452WW–07196 2452WW–07892
4267mm	2452WW–07196 2452WW–09092
4572mm	2452WW–07196 2452WW–10292
4877mm	2452WW–07196 2452WW–11492
5182mm	2452WW–07196 2452WW–12692
5486mm	2452WW–07196 2452WW–13892
5791mm	2452WW–07892 2452WW–14396
6096mm	2452WW–09092 2452WW–14396
6401mm	2452WW–10292 2452WW–14396
6706mm	2452WW–11492 2452WW–14396
7010mm	2452WW–12692 2452WW–14396
7315mm	2452WW–13892 2452WW–14396
7620mm	2452WW–07892 2452WW–07196 2452WW–14396
7925mm	2452WW–09092 2452WW–07196 2452WW–14396
9230mm	2452WW–10292 2452WW–07196 2452WW–14396
8534mm	2452WW–11492 2452WW–07196 2452WW–14396
8839mm	2452WW–12692 2452WW–07196 2452WW–14396
9144mm	2452WW–13892 2452WW–07196 2452WW–14396
WW = Conveyor Width reference: 18, 24	

Item 16: Bed Plate Bottom	
Length	Part Number
610mm	2405WW–01892
914mm	2405WW–03092
1219mm	2405WW–04292
1524mm	2405WW–05492
1829mm	2405WW–06692
2134mm	2405WW–07892
2438mm	2405WW–09092
2743mm	2405WW–10292
3048mm	2405WW–11492
3353mm	2405WW–12692
3658mm	2405WW–13892
3962mm	2405WW–07196 2405WW–07892
4267mm	2405WW–07196 2405WW–09092
4572mm	2405WW–07196 2405WW–10292
4877mm	2405WW–07196 2405WW–11492
5182mm	2405WW–07196 2405WW–12692
5486mm	2405WW–07196 2405WW–13892
5791mm	2405WW–07892 2405WW–14396
6096mm	2405WW–09092 2405WW–14396
6401mm	2405WW–10292 2405WW–14396
6706mm	2405WW–11492 2405WW–14396
7010mm	2405WW–12692 2405WW–14396
7315mm	2405WW–13892 2405WW–14396
7620mm	2405WW–07892 2405WW–07196 2405WW–14396
7925mm	2405WW–09092 2405WW–07196 2405WW–14396
9230mm	2405WW–10292 2405WW–07196 2405WW–14396
8534mm	2405WW–11492 2405WW–07196 2405WW–14396
8839mm	2405WW–12692 2405WW–07196 2405WW–14396
9144mm	2405WW–13892 2405WW–07196 2405WW–14396
WW = Conveyor Width reference: 18, 24	

Return Wear Strip Assembly – 610mm and 914mm Long

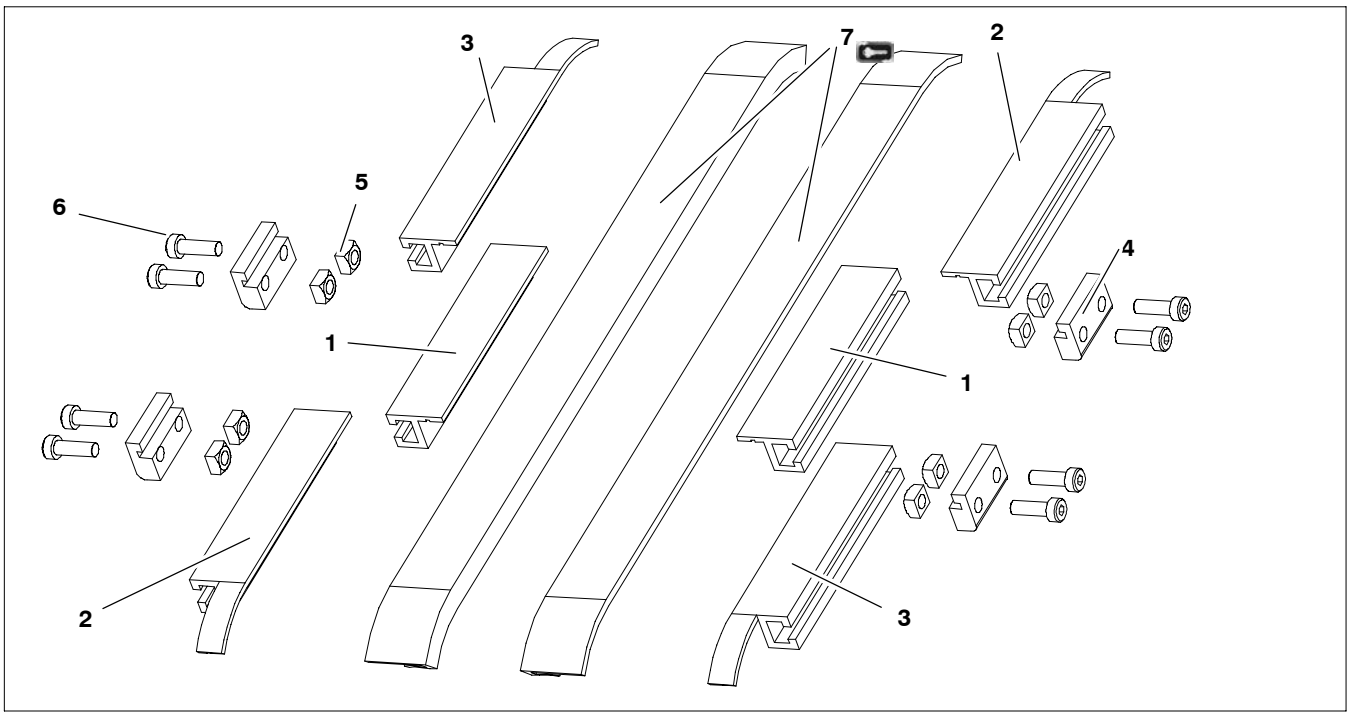

Item	Part Number	Description
1	246075–00425	610mm Return Support Extrusion
	246075–01625	914mm Return Support Extrusion
2	246078	LH Lead–in Return Support
3	246079	RH Lead–in Return Support
4	246080	MPB Return Connector Clip
5	807–920	M6 Square Nut
6	920693M	Scr, Cap Low Head M6 1.0x16mm
7	246082–LLLLL	Bottom Wear Strip – UHMW
	246083–LLLLL	Bottom Wear Strip – Antistat
LLLLL = Wearstrip Length Reference		

Return Wear Strip Assembly – 1219mm to 9144mm Length

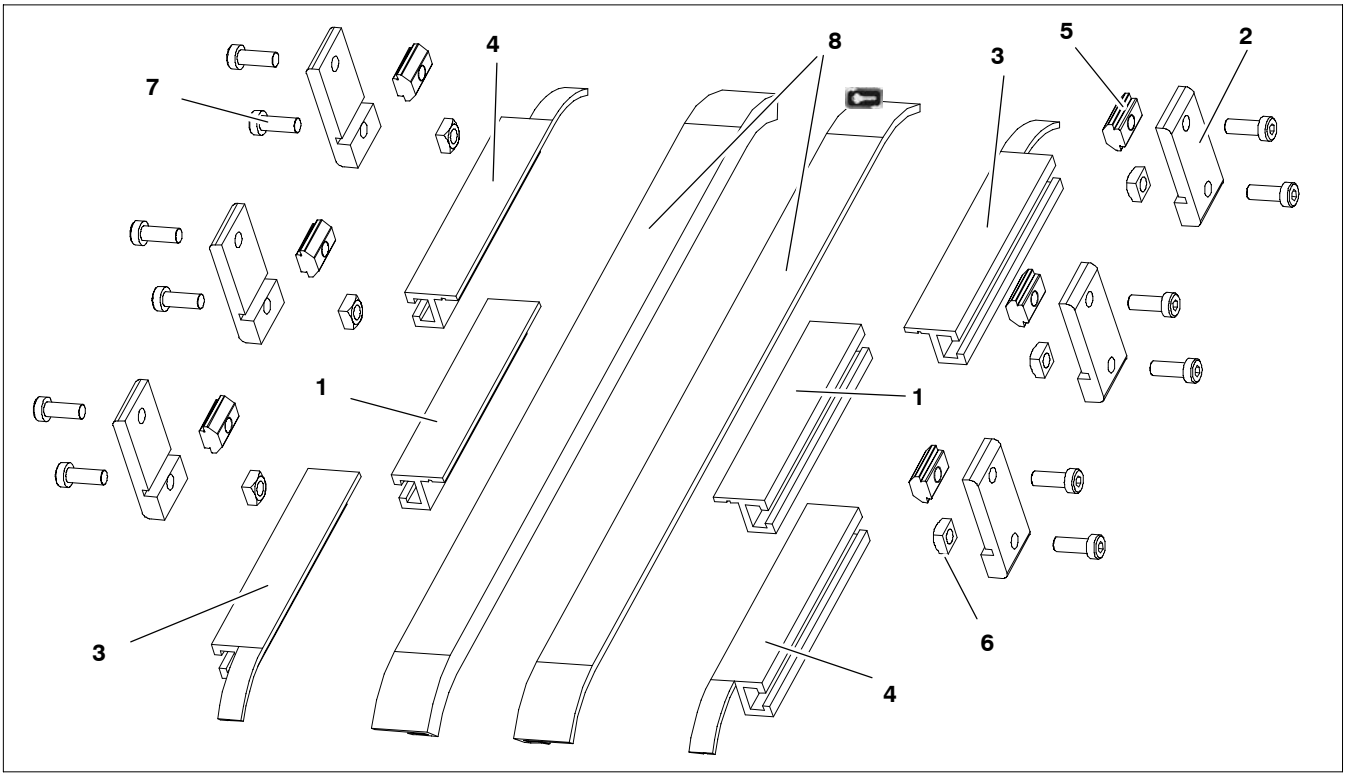

Item	Part Number	Description
1	See Chart Below	Return Support Extrusion
2	246076	MPB Return Clip
3	246078	LH Lead–in Return Support
4	246079	RH Lead–in Return Support
5	639971M	M6 Drop In Tee Bar
6	807–920	M6 Square Nut
7	920693M	Scr, Cap Low Head M6 1.0x16mm
8	246082–LLLLL	Bottom Wear Strip – UHMW
	246083–LLLLL	Bottom Wear Strip – Antistat
LLLLL = Wearstrip Length Reference		

Item 1: MPB Return Support Extrusion	
Length	Part Number
1219mm	246075–02825
1524mm	246075–04025
1829mm	246075–05225
2134mm	246075–06425
2438mm	246075–07625
2743mm	246075–08825
3048mm	246075–10025
3353mm	246075–11225
3658mm	246075–12425
3962mm	246075–07387; 246075–0519
4267mm	246075–08587; 246075–0519
4572mm	246075–09787; 246075–0519
4877mm	246075–10987; 246075–0519
5182mm	246075–12187; 246075–0519
5486mm	246075–13387; 246075–0519
5791mm	246075–07387; 246075–1119
6096mm	246075–08587; 246075–1119
6401mm	246075–09787; 246075–1119
6706mm	246075–10987; 246075–1119
7011mm	246075–12187; 246075–1119
7315mm	246075–13387; 246075–1119
7620mm	246075–07387; 246075–0519; 246075–1200
7925mm	246075–08587; 246075–0519; 246075–1201
8230mm	246075–09787; 246075–0519; 246075–1202
8534mm	246075–10987; 246075–0519; 246075–1203
8839mm	246075–12187; 246075–0519; 246075–1204
9144mm	246075–13387; 246075–0519; 246075–1205

–04 60mm Aluminum Side

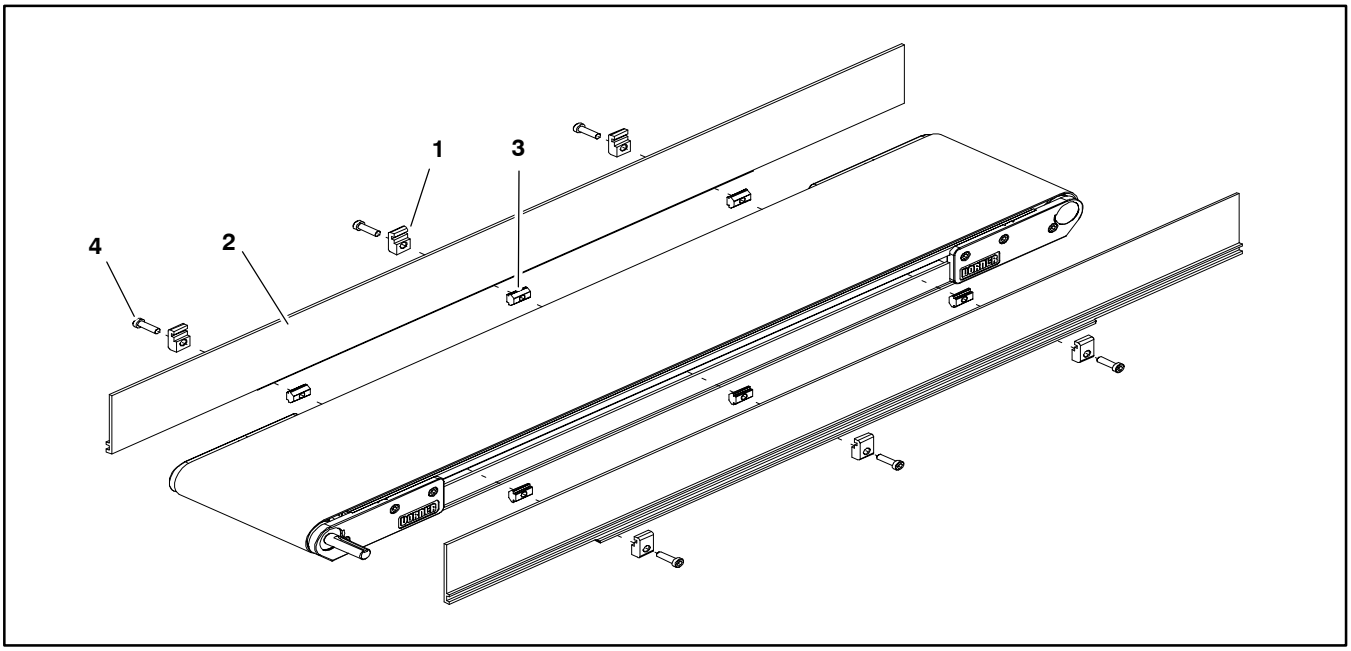

Item	Part Number	Description
1	200121	Guide Retaining Clip
2	See Chart Below	MPB Guide 60mm HS
3	639971M	Single Drop–in Tee Bar
4	920694M	Socket Head Screw M6 x 20mm

Item 2: MPB Guide 60mm HS 610mm to 7315mm			
Length		End Guide	End Guide
610mm	Left Hand	280403–02400	N/A
	Right Hand	280403–02400	N/A
914mm	Left Hand	280403–03600	N/A
	Right Hand	280403–03600	N/A
1219mm	Left Hand	280403–04800	N/A
	Right Hand	280403–04800	N/A
1524mm	Left Hand	280403–06000	N/A
	Right Hand	280403–06000	N/A
1829mm	Left Hand	280403–07200	N/A
	Right Hand	280403–07200	N/A
2134mm	Left Hand	280403–08400	N/A
	Right Hand	280403–08400	N/A
2438mm	Left Hand	280403–09600	N/A
	Right Hand	280403–09600	N/A
2743mm	Left Hand	280403–10800	N/A
	Right Hand	280403–10800	N/A
3048mm	Left Hand	280403–12000	N/A
	Right Hand	280403–12000	N/A
3353mm	Left Hand	280403–13200	N/A
	Right Hand	280403–13200	N/A
3658mm	Left Hand	280403–14400	N/A
	Right Hand	280403–14400	N/A
3962mm	Left Hand	280401–07500	280401–08100
	Right Hand	280402–07500	280402–08100
4267mm	Left Hand	280401–07500	280401–09300
	Right Hand	280402–07500	280402–09300
4572mm	Left hand	280401–07500	280401–10500
	Right Hand	280402–07500	280402–10500
4877mm	Left Hand	280401–07500	280401–11700
	Right Hand	280402–07500	280402–11700
5182mm	Left Hand	280401–07500	280401–12900
	Right Hand	280402–07500	280402–12900
5486mm	Left Hand	280401–07500	280401–14100
	Right Hand	280402–07500	280402–14100
5791mm	Left Hand	280401–14700	280401–08100
	Right Hand	280402–14700	280402–08100
6096mm	Left Hand	280401–14700	280401–09300
	Right Hand	280402–14700	280402–09300
6401mm	Left hand	280401–14700	280401–10500
	Right Hand	280402–14700	280402–10500
6706mm	Left Hand	280401–14700	280401–11700
	Right Hand	280402–14700	280402–11700
7010mm	Left Hand	280401–14700	280401–12900
	Right Hand	280402–14700	280402–12900
7315mm	Left Hand	280401–14700	280401–14100
	Right Hand	280402–14700	280402–14100

Item 2: MPB Guide 60mm HS 7620mm to 9144mm				
Length		End Guide	End Guide	Center
7620mm	Left Hand	280401−07500	280401−08100	200601P−14400
	Right Hand	280402−07500	280402−08100	200601P−14400
7925mm	Left Hand	280401−07500	280401−09300	200601P−14400
	Right Hand	280402−07500	280402−09300	200601P−14400
8230mm	Left Hand	280401−07500	280401−10500	200601P−14400
	Right Hand	280402−07500	280402−10500	200601P−14400
8534mm	Left Hand	280401−07500	280401−11700	200601P−14400
	Right Hand	280402−07500	280402−11700	200601P−14400
8839mm	Left Hand	280401−07500	280401−12900	200601P−14400
	Right Hand	280402−07500	280402−12900	200601P−14400
9144mm	Left Hand	280401−07500	280401−14100	200601P−14400
	Right Hand	280402−07500	280402−14100	200601P−14400

−05 38mm Aluminum Side

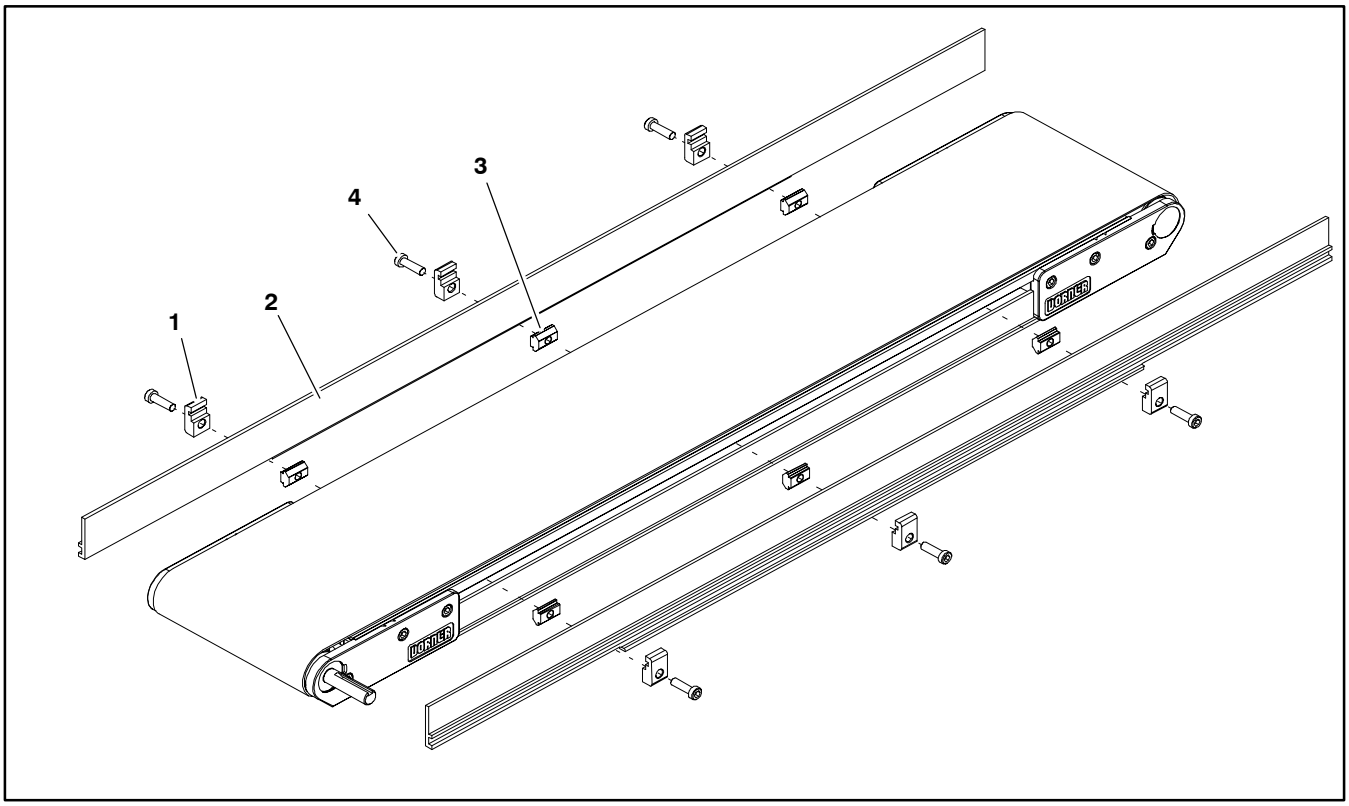

Item	Part Number	Description
1	200121	Guide Retaining Clip
2	See Chart Below	MPB Guide 13mm HS
3	639971M	Single Drop−in Tee Bar
4	920694M	Socket Head Screw M6 x 20mm

Item 2: 2200 Guide 13mm HS			
Length		End Guide	End Guide
610mm	Left Hand	280503–02400	N/A
	Right Hand	280503–02400	N/A
914mm	Left Hand	280503–03600	N/A
	Right Hand	280503–03600	N/A
1219mm	Left Hand	280503–04800	N/A
	Right Hand	280503–04800	N/A
1524mm	Left Hand	280503–06000	N/A
	Right Hand	280503–06000	N/A
1829mm	Left Hand	280503–07200	N/A
	Right Hand	280503–07200	N/A
2134mm	Left Hand	280503–08400	N/A
	Right Hand	280503–08400	N/A
2438mm	Left Hand	280503–09600	N/A
	Right Hand	280503–09600	N/A
2743mm	Left Hand	280503–10800	N/A
	Right Hand	280503–10800	N/A
3048mm	Left Hand	280503–12000	N/A
	Right Hand	280503–12000	N/A
3353mm	Left Hand	280503–13200	N/A
	Right Hand	280503–13200	N/A
3658mm	Left Hand	280503–14400	N/A
	Right Hand	280503–14400	N/A
3962mm	Left Hand	280501–07500	280501–08100
	Right Hand	280502–07500	280502–08100
4267mm	Left Hand	280501–07500	280501–09300
	Right Hand	280502–07500	280502–09300
4572mm	Left hand	280501–07500	280501–10500
	Right Hand	280502–07500	280502–10500
4877mm	Left Hand	280501–07500	280501–11700
	Right Hand	280502–07500	280502–11700
5182mm	Left Hand	280501–07500	280501–12900
	Right Hand	280502–07500	280502–12900
5486mm	Left Hand	280501–07500	280501–14100
	Right Hand	280502–07500	280502–14100
5791mm	Left Hand	280501–14700	280501–08100
	Right Hand	280502–14700	280502–08100
6096mm	Left Hand	280501–14700	280501–09300
	Right Hand	280502–14700	280502–09300
6401mm	Left hand	280501–14700	280501–10500
	Right Hand	280502–14700	280502–10500
6702mm	Left Hand	280501–14700	280501–11700
	Right Hand	280502–14700	280502–11700
7010mm	Left Hand	280501–14700	280501–12900
	Right Hand	280502–14700	280502–12900
7315mm	Left Hand	280501–14700	280501–14100
	Right Hand	280502–14700	280502–14100

Item 2: MPB Guide 13mm HS 7620mm to 9144mm				
Length		End Guide	End Guide	Center
7620mm	Left Hand	280501–07500	280501–08100	200750P–14400
	Right Hand	280502–07500	280502–08100	200750P–14400
7925mm	Left Hand	280501–07500	280501–09300	200750P–14400
	Right Hand	280502–07500	280502–09300	200750P–14400
8230mm	Left Hand	280501–07500	280501–10500	200750P–14400
	Right Hand	280502–07500	280502–10500	200750P–14400
8534mm	Left Hand	280501–07500	280501–11700	200750P–14400
	Right Hand	280502–07500	280502–11700	200750P–14400
8839mm	Left Hand	280501–07500	280501–12900	200750P–14400
	Right Hand	280502–07500	280502–12900	200750P–14400
9144mm	Left Hand	280501–07500	280501–14100	200750P–14400
	Right Hand	280502–07500	280502–14100	200750P–14400

–13 Adjustable Guiding

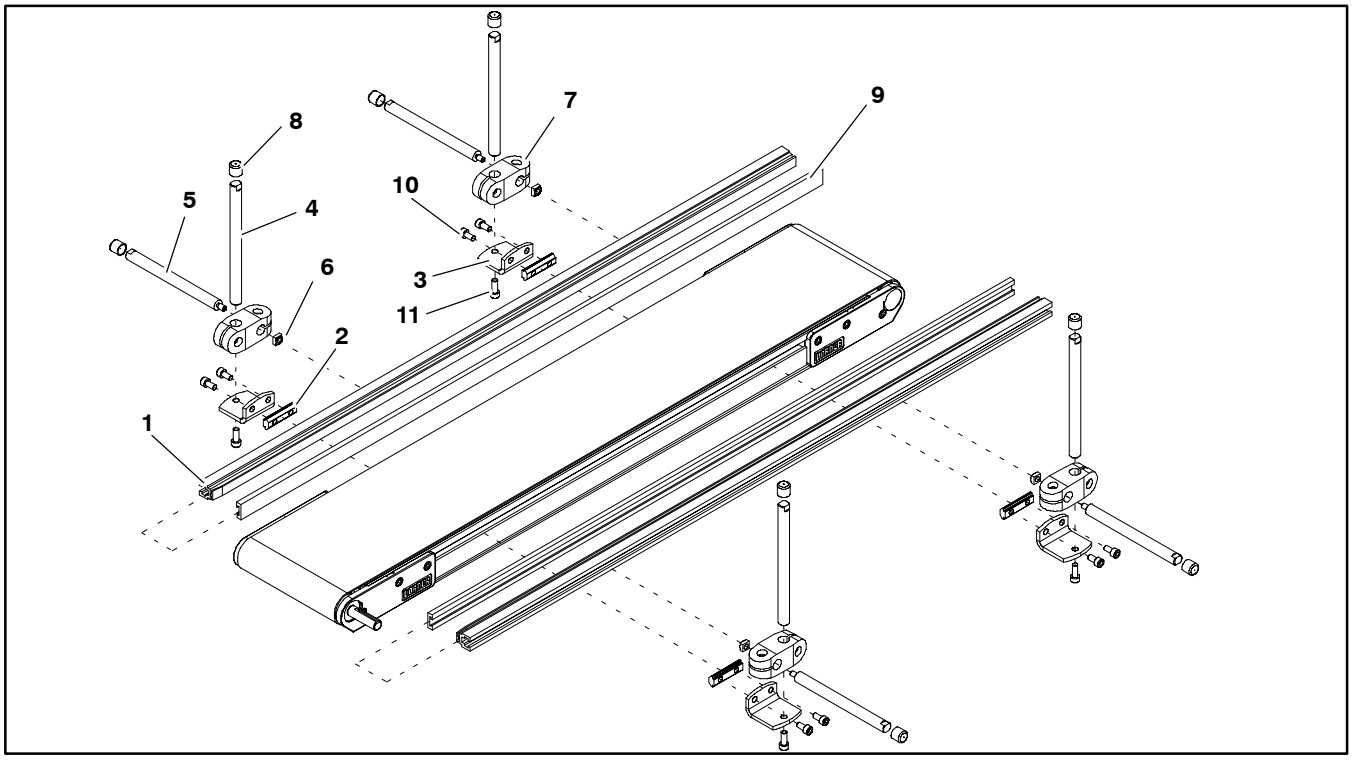

Item	Part Number	Description
1	See Chart Below	Aluminum Profile Guide
2	200830M	Drop–In Tee Bar
3	202004	Mounting Bracket
4	202027M	Guide Mounting Shaft Vertical
5	202028M	Guide Mounting Shaft Horizontal
6	674175MP	Square Nut
7	807–652	Cross Block
8	807–948	Vinyl Shaft Cap
9	614068P	Flat Extruded Guide (per foot)
10	920612M	Socket Head Screw M6 x 12mm
11	920616M	Socket Head Screw M6 x 16mm

Item 2: MPB Aluminum Profile Guide			
Length	End Guide	Middle Guide	End Guide
610mm	202983	N/A	N/A
914mm	202984	N/A	N/A
1219mm	202985	N/A	N/A
1524mm	202986	N/A	N/A
1829mm	202987	N/A	N/A
2134mm	202988	N/A	N/A
2438mm	202989	N/A	N/A
2743mm	202990	N/A	N/A
3048mm	202991	N/A	N/A
3353mm	202992	N/A	N/A
3658mm	202993	N/A	N/A
3962mm	202988	202987	N/A
4267mm	202989	202987	N/A
4572mm	202990	202987	N/A
4877mm	202991	202987	N/A
5182mm	202992	202987	N/A
5486mm	202993	202987	N/A
5791mm	202988	202993	N/A
6096mm	202989	202993	N/A
6401mm	202990	202993	N/A
6706mm	202991	202993	N/A
7010mm	202992	202993	N/A
7315mm	202993	202993	N/A
7620mm	202988	202993	202987
7925mm	202989	202993	202987
8230mm	202990	202993	202987
8534mm	202991	202993	202987
8839mm	202992	202993	202987
9144mm	202993	202993	202987

51mm Cleated Guiding

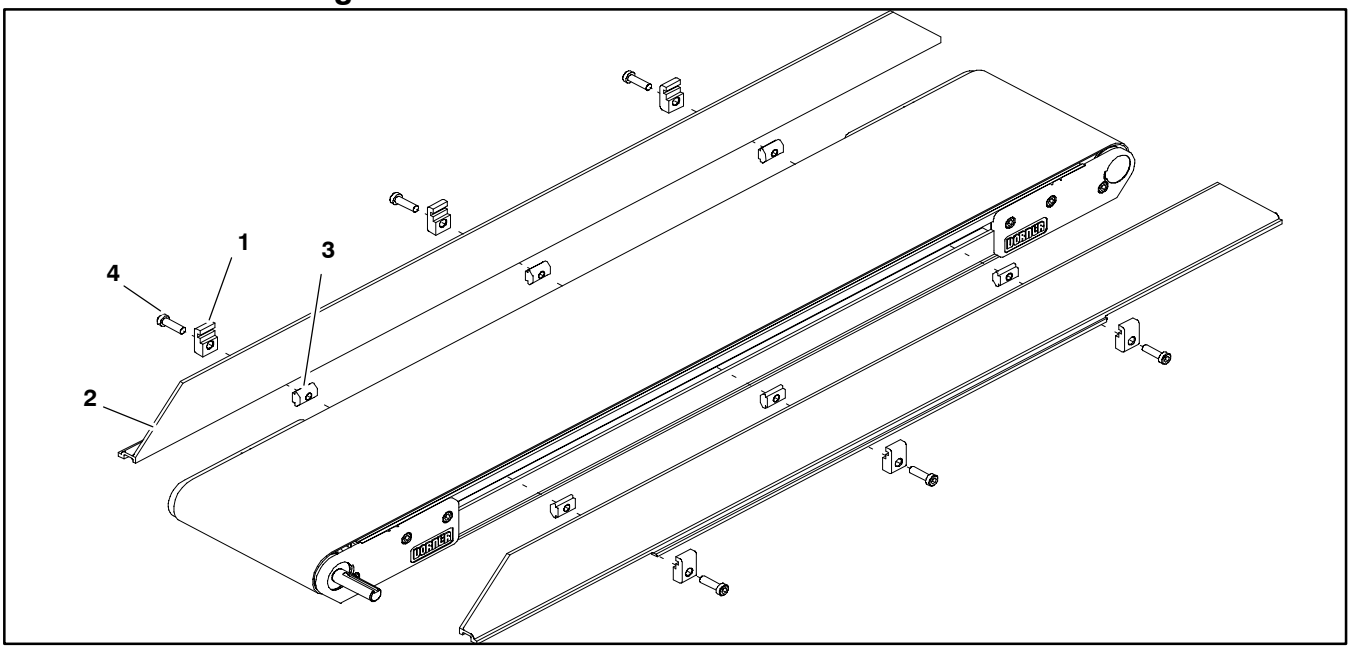

Item	Part Number	Description
1	200121	Guide Retaining Clip
2	See Chart Below	2200 Guide 58mm Cleated
3	639971M	Drop–In Tee Bar
4	920694M	Socket Head Screw M6 x 20mm

Item 2: MPB Cleated Guide			
Length	End Guide	Middle Guide	End Guide
610mm	246051–01070	N/A	246052–01070
914mm	246051–01670	N/A	246052–01670
1219mm	246051–02270	N/A	246052–02270
1524mm	246051–02870	N/A	246052–02870
1829mm	246051–03470	N/A	246052–03470
2134mm	246051–04070	N/A	246052–04070
2438mm	246051	N/A	246052
2743mm	246051–03513	246050–03513	246052–03513
3048mm	246051–03913	246050–03913	246052–03913
3353mm	246051	246050–03600	246052
3658mm	246051	246050–04800	246052
3962mm	246051	246050–03300 246050–02700	246052
4267mm	246051	246050–04500 246050–02700	246052
4572mm	246051	246050–05700 246050–02700	246052
4877mm	246051	246050–06900 246050–02700	246052
5182mm	246051	246050–08100 246050–02700	246052
5486mm	246051	246050–09300 246050–02700	246052
5791mm	246051	246050–03300 246050–09900	246052
6096mm	246051	246050–04500 246050–09900	246052
6401mm	246051	246050–05700 246050–09900	246052
6706mm	246051	246050–06900 246050–09900	246052
7010mm	246051	246050–08100 246050–09900	246052
7315mm	246051	246050–09300 246050–09900	246052
7620mm	246051	246050–09300 246050–09900 246050–02700	246052
7925mm	246051	246050–03300 246050–14400 246050–02700	246052
8230mm	246051	246050–04500 246050–14400 246050–02700	246052
8534mm	246051	246050–05700 246050–14400 246050–02700	246052
8839mm	246051	246050–06900 246050–14400 246050–02700	246052
9144mm	246051	246050–08100 246050–14400 246050–02700	246052

Flat Belt Mounting Brackets

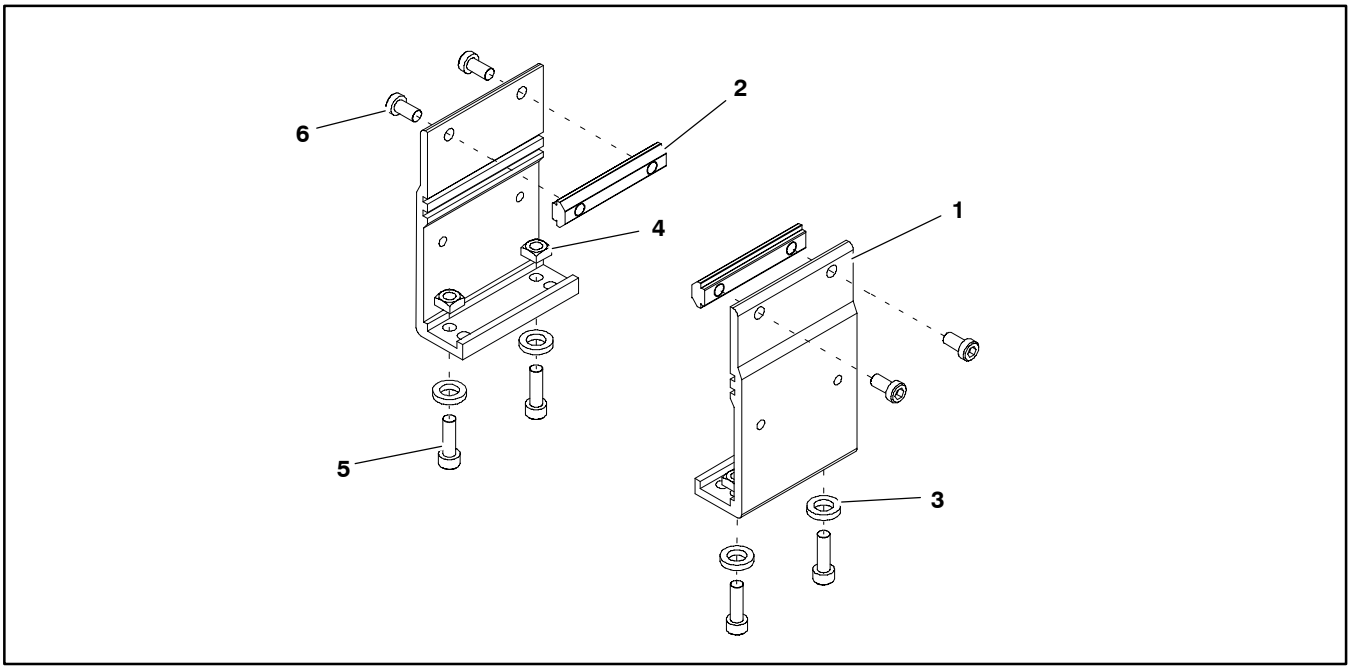

Item	Part Number	Description
1	240831	Stand Mount
2	300150M	Drop–In Tee Bar
3	605279P	Washer
4	807–920	Square Nut M6 5mm x 10mm
5	920620M	Socket Head Screw M6 x 20mm
6	920692M	Socket Head Screw M6 x 12mm

Cleated Belt Mounting Brackets

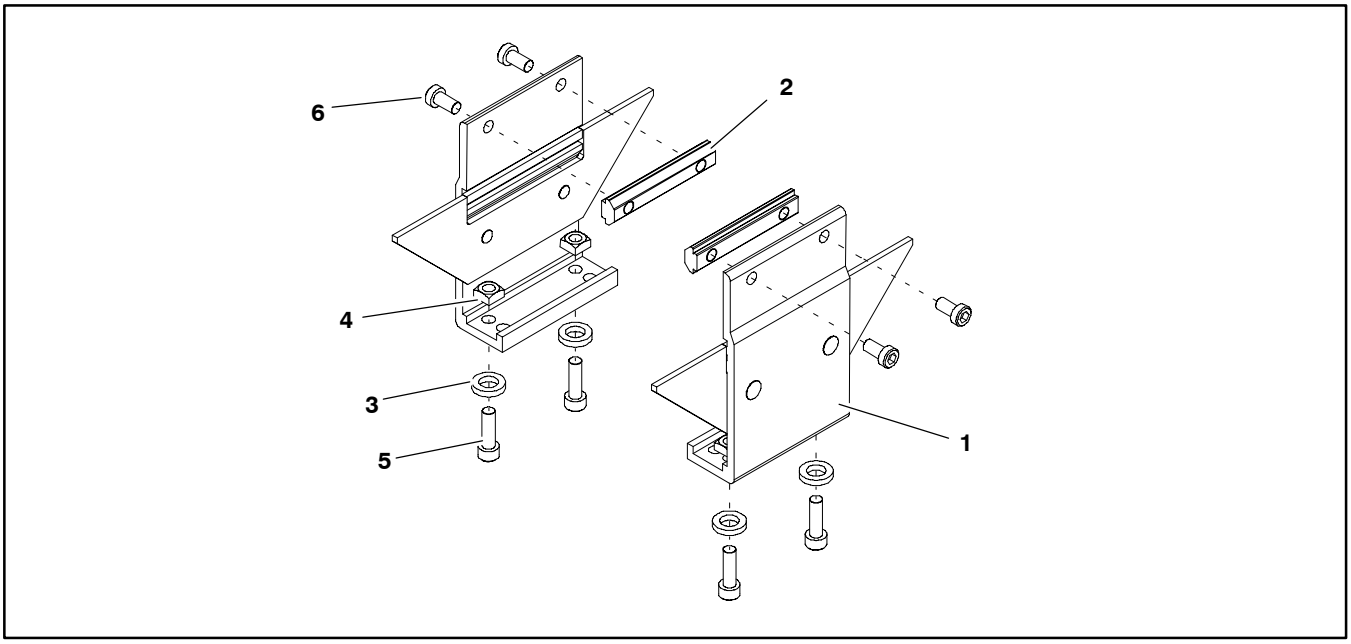

Item	Part Number	Description
1	240836	Cleated Mounting Assembly
2	300150M	Drop–In Tee Bar
3	605279P	Washer
4	807–920	Square Nut M6 5mm x 10mm
5	920620M	Socket Head Screw M6 x 20mm
6	920692M	Socket Head Screw M6 x 12mm

Flat Belt Mounting Brackets for 610mm Conveyors

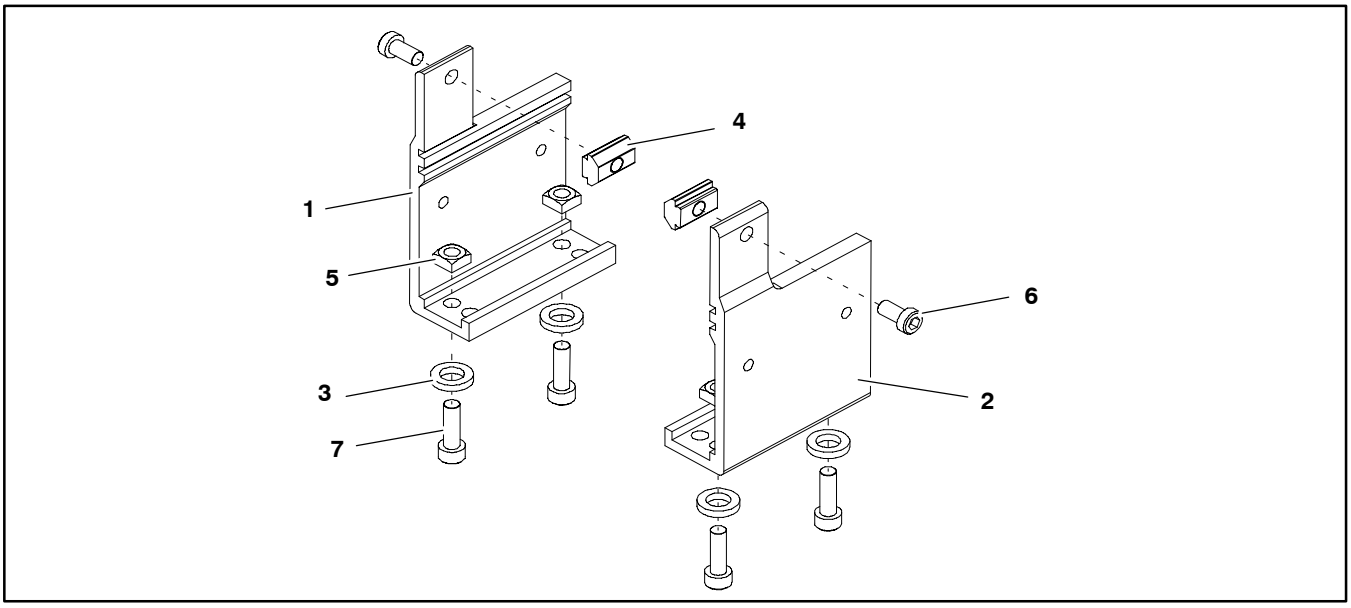

Item	Part Number	Description
1	240833	Stand Mount, LH 610mm
2	240834	Stand Mount, RH 610mm
3	605279P	Washer
4	639971M	Drop–In Tee Bar
5	807–920	Square Nut M6 5mm x 10mm
6	920620M	Socket Head Screw M6 x 20mm
7	920692M	Socket Head Screw M6 x 12mm

Cleated Belt Mounting Brackets for 610mm Conveyors

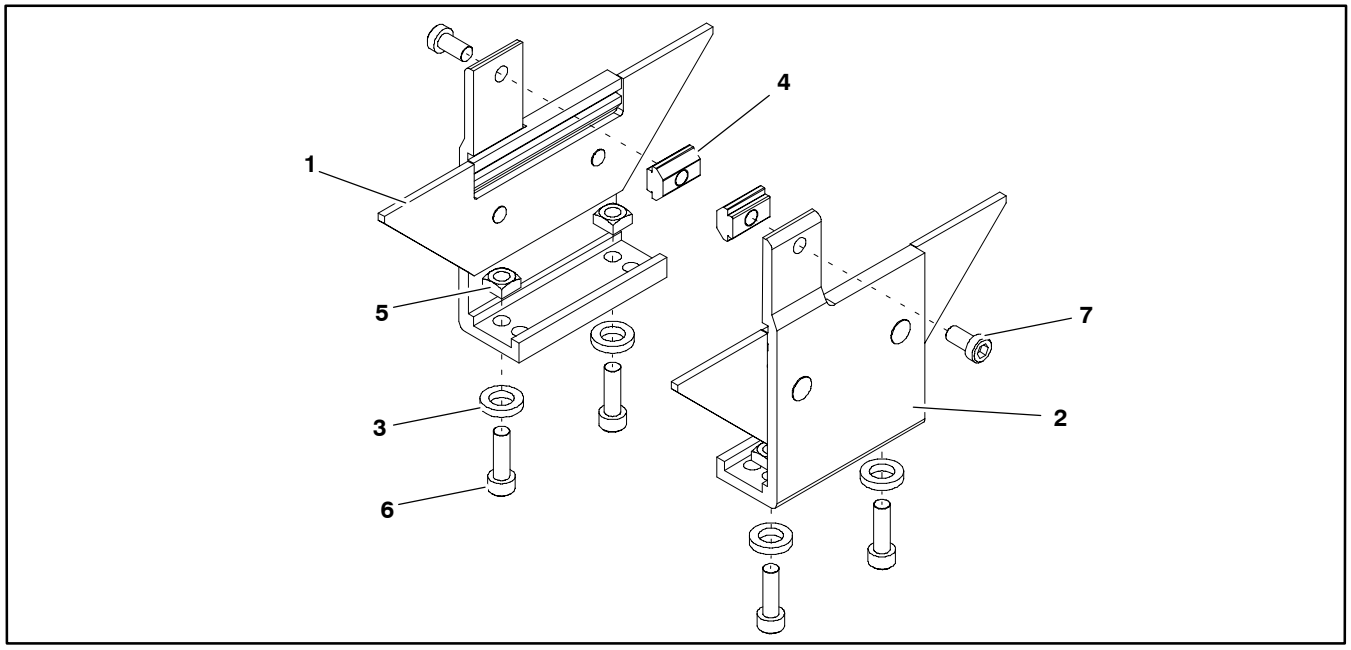

Item	Part Number	Description
1	240852	Cleated Stand Bracket Assembly LH 610mm Conveyor
2	240853	Cleated Stand Bracket Assembly RH 610mm Conveyor
3	605279P	Washer
4	639971M	Drop–In Tee Bar
5	807–920	Square Nut M6 5mm x 10mm
6	920620M	Socket Head Screw M6 x 20mm
7	920692M	Socket Head Screw M6 x 12mm

Connecting Assembly without Stand Mount

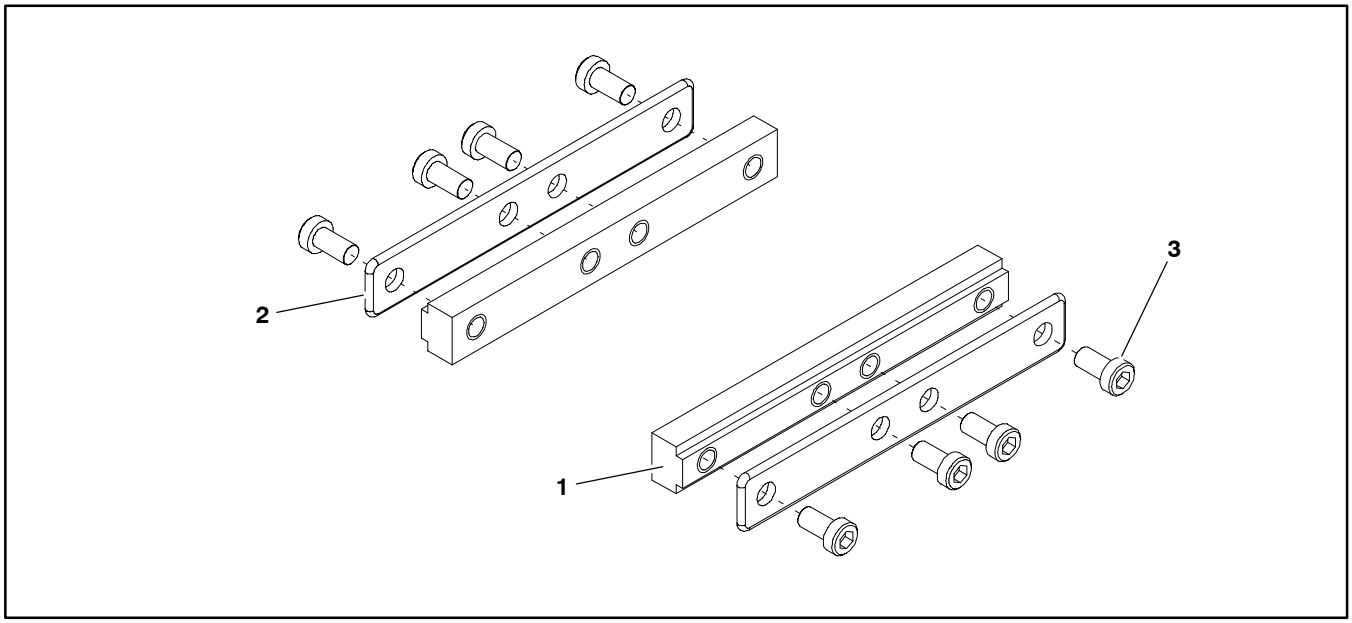

Item	Part Number	Description
1	240331	Frame Bar Connector
2	300153M	Intermediate Clamp Plate
3	920692M	Socket Head Screw M6 x 12mm

Flat Belt Connecting Assembly with Stand Mount

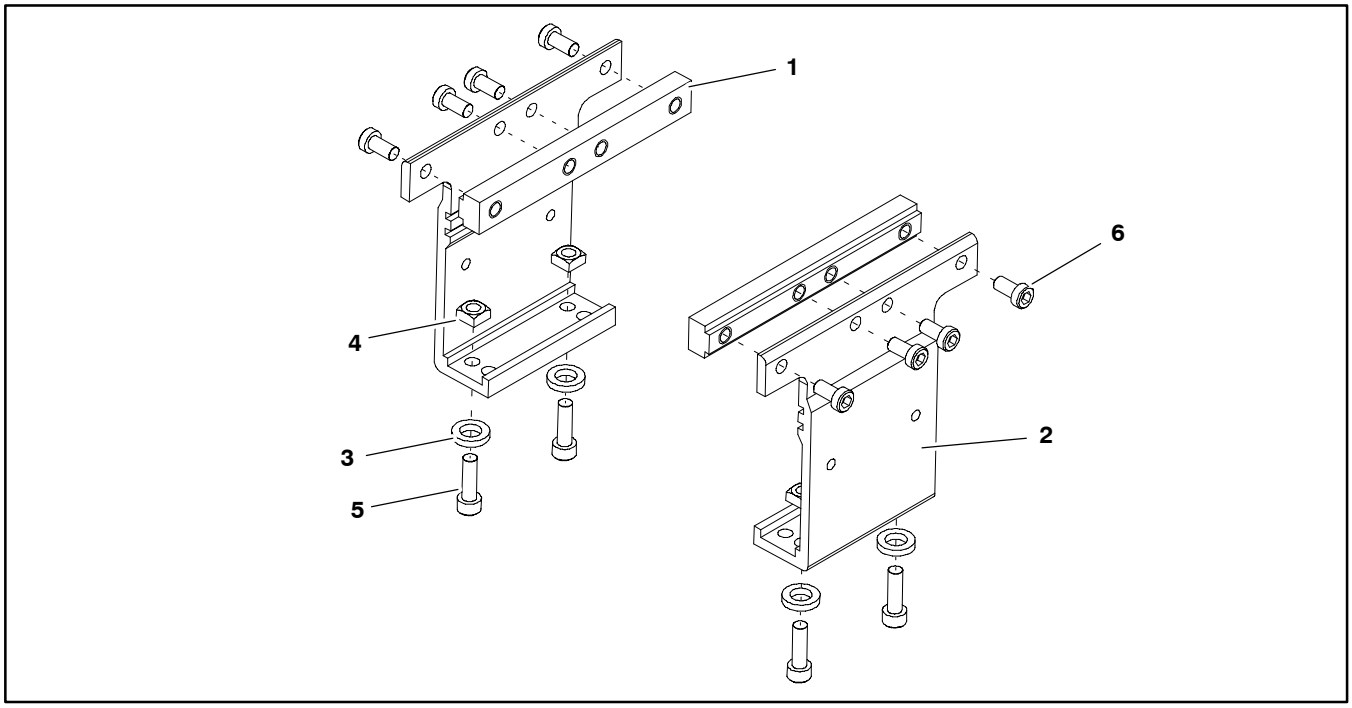

Item	Part Number	Description
1	240331	Frame Connector Bar
2	240837	Stand Mount Joint
3	605279P	Washer
4	807–920	Square Nut M6 5mm x 10mm
5	920620M	Socket Head Screw M6 x 20mm
6	920692M	Socket Head Screw M6 x 12mm

Cleated Belt Connecting Assembly with Stand Mount

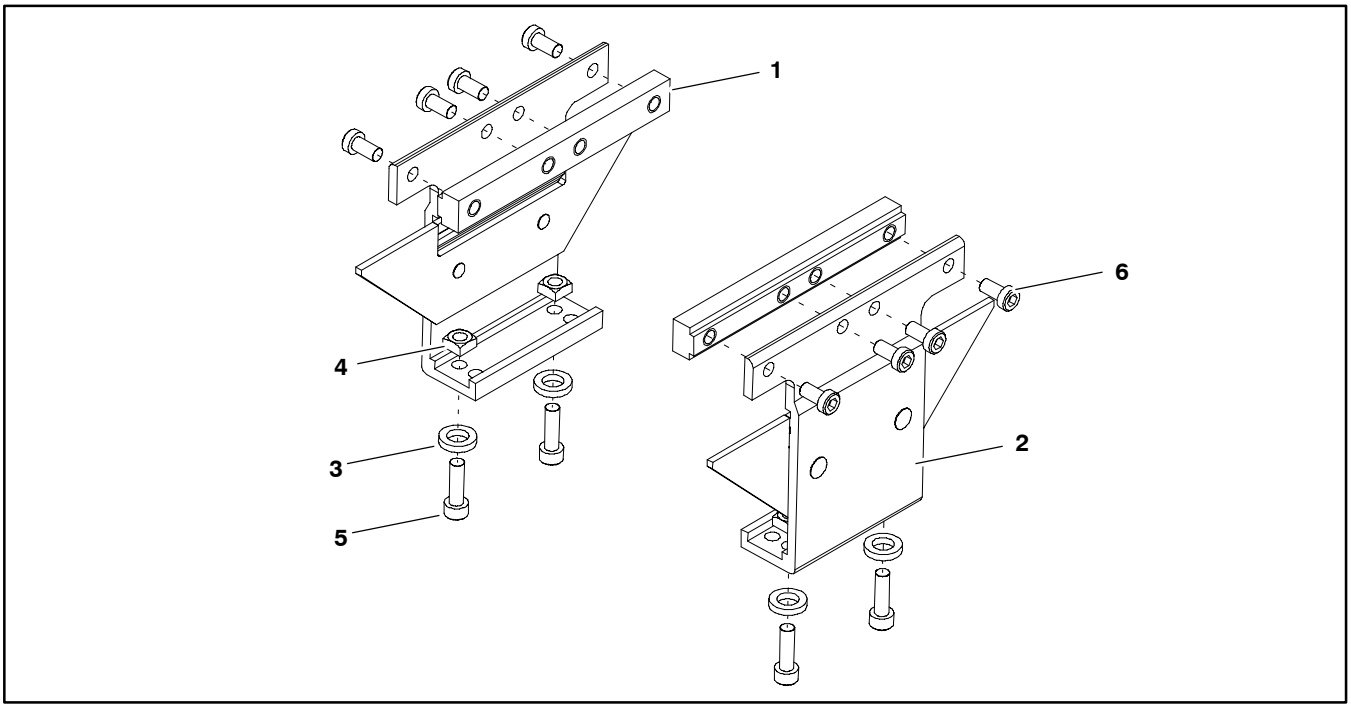

Item	Part Number	Description
1	240331	Frame Connector Bar
2	240846	Cleat Stand Bracket Assembly
3	605279P	Washer
4	807–920	Square Nut M6 5mm x 10mm
5	920620M	Socket Head Screw M6 x 20mm
6	920692M	Socket Head Screw M6 x 12mm

Conveyor Belting

A – Complete Conveyor Belt

Flat Belt Conveyor Model Number | **2P0 M WW LLLL A PP BB**

Cleated Belt Conveyor Model Number | **2P2 C M WW LLLL A BB SS**

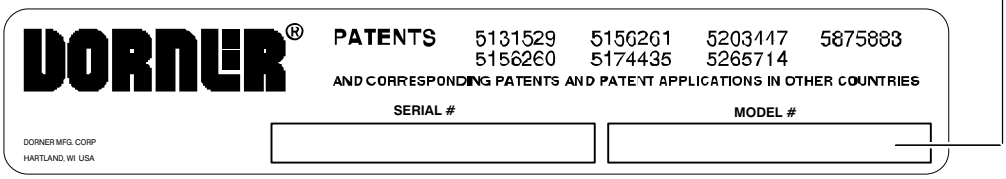

Figure 51

Flat Belt Part Number Configuration

Refer to Dorner patent plate (Figure 51). From the model number, determine conveyor width ("WW"), length ("LLLL") and belt type ("BB"). Use data to configure belt part number as indicated below.

2P - WW LLLL / BB

2P–____ (Fill In) ____/_____

Cleated Belt Part Number Configuration

Refer to Dorner patent plate (Figure 51). From the model number, determine conveyor width ("WW"), length ("LLLL"), belt type ("BB") and cleat spacing ("SS"). Use data to configure belt part number as indicated below.

2P - WW LLLL / BB SS

2P–____ (Fill In) ____/_____ _____

B – Belting Per 305mm

Flat Belts

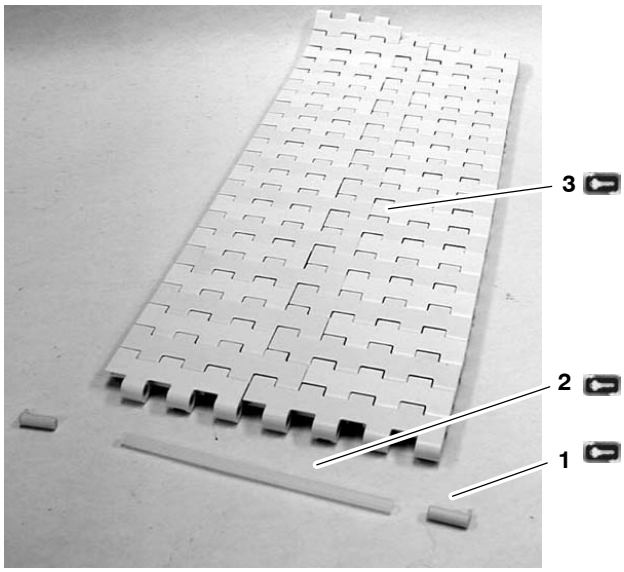

Item	Part Number	Description
1	807–1118	Retaining Pin
2	807–1113	102mm Belt Rod
	807–1114	152mm Belt Rod
	807–1115	305mm Belt Rod
	807–1116	457mm Belt Rod
	807–1119	610mm Belt Rod
3	2P – WW/BB	Belting per 305mm WW=Width: 102,152,305,457,610; BB=Belt Type (See Table Below)

Belt Type BB =	
30	Accumulation, Open Mesh
31	Chemical Resistant, Open Mesh
32	Heat Resistant, Open Mesh
33	ESD, Open Mesh (Class II Charges)
40	Accumulation, Closed Mesh
41	Chemical Resistant, Closed Mesh
42	Heat Resistant, Closed Mesh
43	ESD, Closed Mesh (Class II Charges)

Service Parts

Cleated Belts

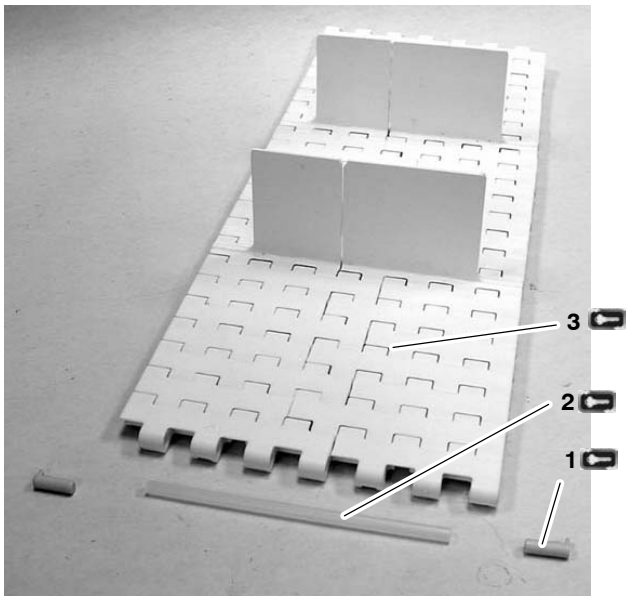

Item	Part Number	Description
1	807–1118	Retaining Pin
2	807–1113	102mm Belt Rod
	807–1114	152mm Belt Rod
	807–1115	305mm Belt Rod
	807–1116	457mm Belt Rod
	807–1119	610mm Belt Rod
3	2P – WW/BBSS	Belting per 305mm WW=Width: 102,152,305,457,610; BB=Belt Type (See Table Below); SS=Cleat Spacing (Links)

Belt Type BB =	
34	General Purpose, Open Mesh
35	Chemical Resistant, Open Mesh
36	Heat Resistant, Open Mesh
44	General Purpose, Closed Mesh
45	Chemical Resistant, Closed Mesh
46	Heat Resistant, Closed Mesh

Sidewall Cleated Belts

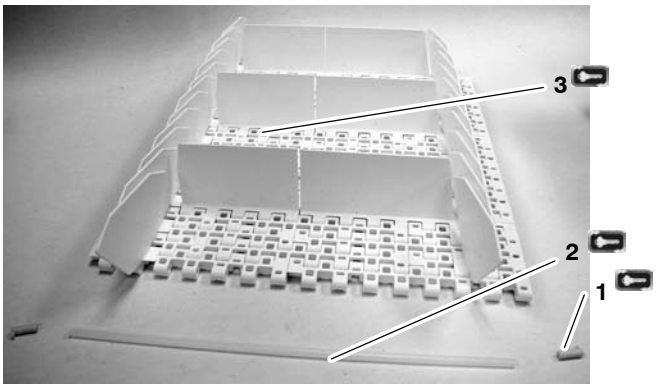

Item	Part Number	Description
1	807–1118	Retaining Pin
2	807–1113	102mm Belt Rod
	807–1114	152mm Belt Rod
	807–1115	305mm Belt Rod
	807–1116	457mm Belt Rod
	807–1119	610mm Belt Rod
3	2P – WW/BBSS	Belting per 305mm WW=Width:305,457,610; BB=Belt Type (See Table Below) SS=Cleat Spacing (links)

Belt Type BB =	
37	General Purpose, Open Mesh
38	Chemical Resistant, Open Mesh
47	General Purpose, Closed Mesh
48	Chemical Resistant, Closed Mesh

Notes

Return Policy

No returns will be accepted without prior written factory authorization. When calling for authorization, please have the following information ready for the Dorner Factory representative or your local distributor:

1. Name and address of customer.
2. Item(s) being returned.
3. Reason for return.
4. Customer's original order number used when ordering the item(s).
5. Dorner or distributor invoice number.

A representative will discuss action to be taken on the Returned items and provide a Returned Goods Authorization Number to reference.

There will be a 15% restocking charge on all new items returned for credit where Dorner was not at fault. These will not be accepted after 60 days from original invoice date. The restocking charge covers inspection, cleaning, disassembly, and reissuing to inventory.

If a replacement is needed prior to evaluation of returned item, a purchase order must be issued. Credit (if any) is issued only after return and evaluation is complete.

Dorner has representatives throughout the world. Feel free to contact Dorner for the name of your local representative. Our technical sales and service staff will gladly help with your questions on Dorner products.

For a copy of Dorner's Limited Warranty, contact factory, distributor, service center or visit our website at www.dorner.com.

For replacement parts, contact an authorized Dorner Service Center or the factory.

Dorner Mfg. Corp. reserves the right to change or discontinue products without notice. All products and services are covered in accordance with our standard warranty. All rights reserved. ©Dorner Mfg. Corp. 2000

DORNER MFG. CORP.
975 Cottonwood Ave., PO Box 20
Hartland, WI 53029-0020 USA

USA
TEL 1-800-397-8664 (USA)
FAX 1-800-369-2440 (USA)

Outside the USA:
TEL 1-262-367-7600
FAX 1-262-367-5827

Internet: www.dorner.com