Installation, Maintenance & Parts Manual

MPB Series End Drive Conveyors

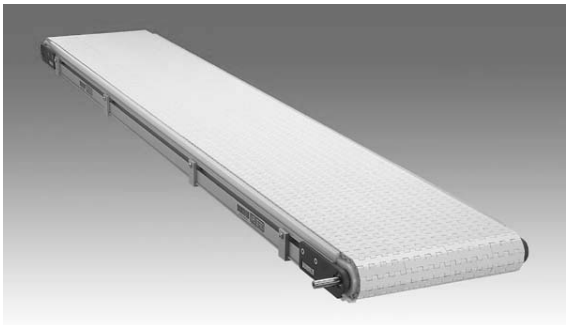

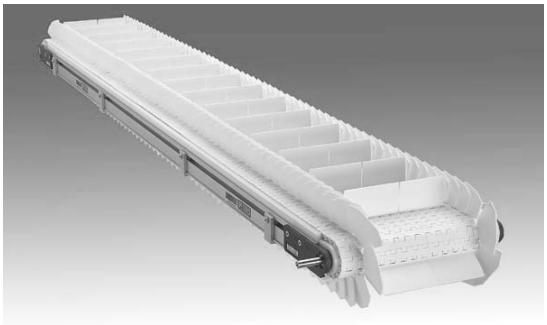

Table of Contents

Warnings – General Safety 2
Introduction 3
Product Description 3
Specifications 3
Load vs Speed vs Conveyor Length Per Width 5
Installation 7
Required Tools 7
Recommended Installation Sequence 7
Conveyors Up to 12 ft (3658 mm) 7
Conveyors Longer Than 12 ft (3658 mm) 7
Mounting Brackets 8
Installing Plastic Belt 9
Preventative Maintenance & Adjustment 10
Required Tools 10
Standard Tools 10
Special Tools 10
Checklist 10
Lubrication 10
Maintaining Conveyor Belt 10
Troubleshooting 10
Cleaning 10
Conveyor Belt Replacement 10
Conveyor Belt Replacement Sequence 10
Belt Removal 10
Belt Installation 11
Conveyor Belt Tensioning 12
Pulley Removal 14
A – Idler Pulley Removal 14
B – Drive Pulley Removal 15
Bearing Removal & Replacement 15
Pulley Replacement 16
Drive Pulley 16
Idler Pulley 17
Service Parts 20
4” (102mm) and 6” (152mm) Wide Conveyor Assembly 20
12” (305mm) Conveyor Assembly 23
18” (457mm) and 24” (610mm) Wide Conveyor Assembly 27
Return Wear Strip Assembly–Under 3’ (914mm) Long . . 30
Return Wear Strip Assembly–Over 3’ (914mm) Long . . . 31
–04 3” (76mm) Aluminum Side 32
–05 1.5” (38mm) Aluminum Side 33
–13 Adjustable Guiding 35
2” (51mm) Cleated Guiding 36
Flat Belt Mounting Bracket 37
Cleated Belt Mounting Bracket 37
Flat Belt Mounting Brackets for 2’ (610mm) Conveyors 38
Cleated Belt Mounting Brackets for 2’ (610mm) Conveyors 38
Connecting Assembly without Stand Mount 39
Flat Belt Connecting Assembly with Stand Mount 39
Cleated Belt Connecting Assembly with Stand Mount . . . 40
Conveyor Belting 41
Complete Conveyor Belt 41
Belting Per 1ft (305mm) 41
Return Policy 44

Warnings – General Safety

WARNING

The safety alert symbol, black triangle with white exclamation, is used to alert you to potential personal injury hazards.

DANGER

Climbing, sitting, walking or riding on conveyor will cause severe injury.

KEEP OFF CONVEYORS.

DANGER

DO NOT OPERATE CONVEYORS IN AN EXPLOSIVE ENVIRONMENT.

WARNING

Gearmotors may be HOT.

DO NOT TOUCH Gearmotors.

WARNING

Exposed moving parts can cause severe injury.

LOCK OUT POWER before removing guards or performing maintenance.

WARNING

MPB Series Conveyors are not reversible. Reversing creates pinch points which can cause severe injury.

DO NOT REVERSE MPB SERIES CONVEYORS.

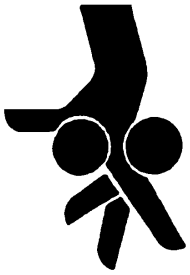

WARNING

For MPB Series Flat and Cleated Belt Conveyors, Top and Bottom Mount Gearmotors must be mounted as shown below.

Failure to do so creates pinch points which can cause severe injury.

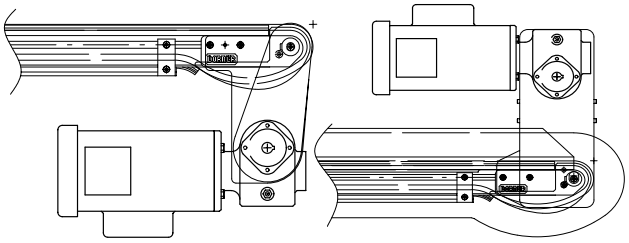

Flat Belt Bottom Mount **Cleated Belt Top Mount**

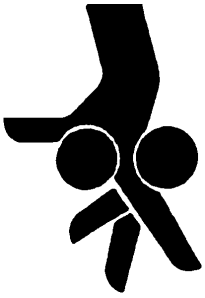

WARNING

Dorner cannot control the physical installation and application of conveyors. Taking protective measures is the responsibility of the user.

When conveyors are used in conjunction with other equipment or as part of a multiple conveyor system, CHECK FOR POTENTIAL PINCH POINTS and other mechanical hazards before system start-up.

WARNING

Loosening stand height or angle adjustment screws may cause conveyor sections to drop down, causing severe injury.

SUPPORT CONVEYOR SECTIONS PRIOR TO LOOSENING STAND HEIGHT OR ANGLE ADJUSTMENT SCREWS.

Introduction

IMPORTANT: Some illustrations may show guards removed. DO NOT operate equipment without guards.

Upon receipt of shipment:

- Compare shipment with packing slip. Contact factory regarding discrepancies.
- Inspect packages for shipping damage. Contact carrier regarding damage.
- Accessories may be shipped loose. See accessory instructions for installation.

Dorner's Limited Warranty applies.

Dorner MPB & 2200 series conveyors are covered by Patent Numbers 5,174,435, 6,298,981 and corresponding patents and patent applications in other countries.

Dorner reserves the right to make changes at any time without notice or obligation.

Dorner has convenient, pre–configured kits of Key Service Parts for all conveyor products. These time saving kits are easy to order, designed for fast installation, and guarantee you will have what you need when you need it. Key Parts and Kits are marked in the Service Parts section of this manual with the Performance Parts Kits logo .

Product Description

Refer to Figure 1 for typical conveyor components.

Typical Components

A	Conveyor
B	Gearmotor Mounting Package
C	Gearmotor
D	Guiding & Accessories
E	Mounting Brackets
F	Support Stand
H	Drive End
I	Idler/Tension End

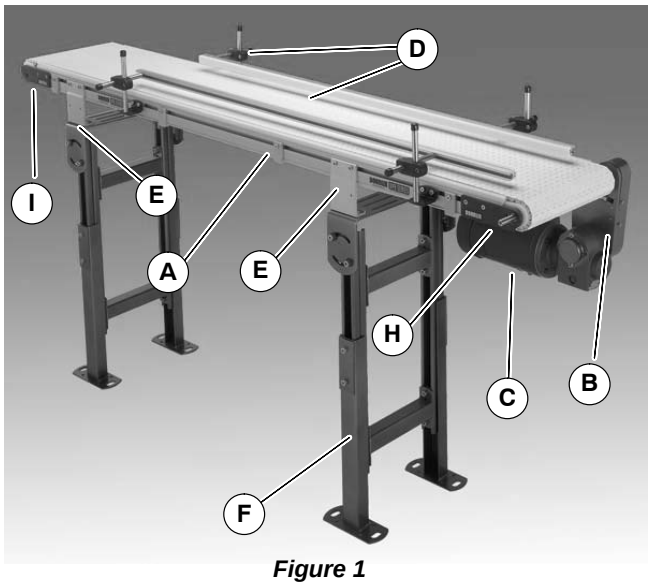

Figure 1

Specifications

Models:

Flat Belt MPB Series Conveyor

2 P 0 M WW LLLL A PP BB

- BB — Belt Type*
- PP — Conveyor Profile*
- A — Output Shaft Position*
- LLLL — Conveyor Length Reference
- WW — Conveyor Width Reference
- M — Document Language, M = English
- 0 — Stand Brackets: 0 = With required brackets; 1 = Without required brackets
- P — Bedplate Style: C = Closed; P = Perforated
- 2 — MPB Series Plastic Belt Conveyor

Cleated Belt MPB Series Conveyor

2 P 2 M WW LLLL A BB SS

- SS — Cleat Spacing*
- BB — Belt Type*
- A — Output Shaft Position*
- LLLL — Conveyor Length Reference
- WW — Conveyor Width Reference
- M — Document Language, M = English
- 2 — Stand Brackets: 2 = With required brackets; 3 = Without required brackets
- P — Bedplate Style: C = Closed; P = Perforated
- 2 — MPB Series Plastic Belt Conveyor

*** See Ordering and Specifications Catalog for details.**

Specifications

Conveyor Supports:

Maximum Distances:

J = 18" (457 mm)**

K = 6 ft (1829 mm)***

L = 18" (457 mm)

** For Heavy Load Bottom Mount Package, mount support under gear head.

*** For conveyors longer than 13 ft (3962 mm), install support at joint.

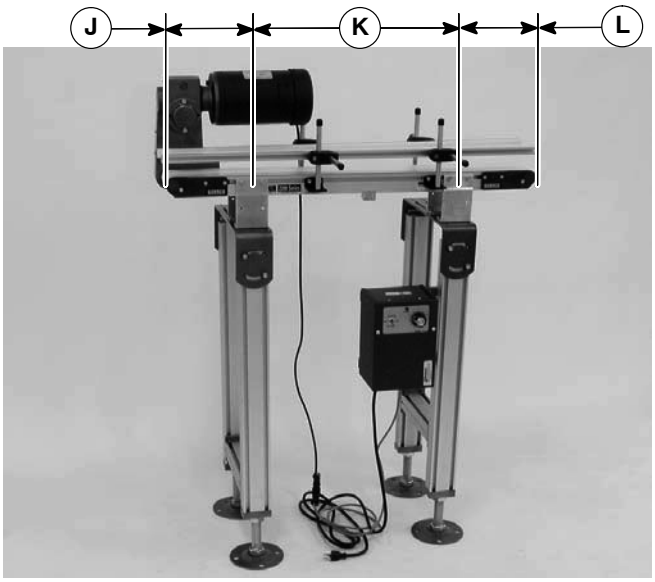

Figure 2

Specifications:

Conveyor Width Reference (WW)	04	06	12	18	24
Conveyor Belt Width	3.0" (76mm)	5.25" (133mm)	11.25" (286mm)	17.25" (438mm)	23.25" (591mm)
Conveyor Length Reference (LL)	0200 to 3000 in 0002 increments				
Conveyor Length	2 ft (610mm) to 30 ft (9144mm) in 0.24" (6mm) increments				
Belt Travel	8.1" (209 mm) per revolution of pulley				
Maximum Belt Speed*	250 ft/minute (76.2 m/minute) for flat belt models 150 ft/minute (45.7 m/minute) for cleated belt models				
Belt Takeup	1.5" (38 mm) of stroke = 3" (76 mm) of belt take-up				

No Load Torque

NOTES:

1. No Load torques are for Flat Belt conveyors only. For No Load torques on Cleated and Sidewall Cleated Conveyors contact the factory.
2. The torque required to overcome the conveyor's initial startup inertia may temporarily exceed the average "no load" torque by a factor of 2 to 3 times.
3. Stated torques are average values based on Dorner standard belts running at 50' (15meters) per minute.

No Load Torque Data

Length (feet)	Width									
	3.0” (76mm)		5.25” (133mm)		11.25” (286mm)		17.25“ (438mm)		23.25” (591mm)	
	in–lbs	N–m	in–lbs	N–m	in–lbs	N–m	in–lbs	N–m	in–lbs	N–m
2	5	0.6	6	0.6	6	0.7	7	0.8	7	0.8
3	5	0.6	6	0.7	7	0.8	8	0.9	8	1.0
4	6	0.6	6	0.7	7	0.8	8	1.0	10	1.1
5	6	0.7	6	0.7	8	0.9	9	1.0	11	1.2
6	6	0.7	7	0.7	8	0.9	10	1.1	12	1.3
7	6	0.7	7	0.8	9	1.0	11	1.2	13	1.5
8	6	0.7	7	0.8	9	1.1	12	1.3	14	1.6
9	6	0.7	7	0.8	10	1.1	13	1.4	15	1.7
10	7	0.7	8	0.9	11	1.2	14	1.5	16	1.9
11	7	0.8	8	0.9	11	1.3	14	1.6	18	2.0
12	7	0.8	8	0.9	12	1.3	15	1.7	19	2.1
13	7	0.8	8	0.9	12	1.4	16	1.8	20	2.3
14	7	0.8	9	1.0	13	1.4	17	1.9	21	2.4
15	7	0.8	9	1.0	13	1.5	18	2.0	22	2.5
16	8	0.9	9	1.0	14	1.6	19	2.1	23	2.6
17	8	0.9	9	1.1	14	1.6	19	2.2	25	2.8
18	8	0.9	10	1.1	15	1.7	20	2.3	26	2.9
19	8	0.9	10	1.1	16	1.8	21	2.4	27	3.0
20	8	0.9	10	1.2	16	1.8	22	2.5	28	3.2
21	8	0.9	10	1.2	17	1.9	23	2.6	29	3.3
22	9	1.0	11	1.2	17	1.9	24	2.7	30	3.4
23	9	1.0	11	1.2	18	2.0	25	2.8	31	3.6
24	9	1.0	11	1.3	18	2.1	25	2.9	33	3.7
25	9	1.0	11	1.3	19	2.1	26	3.0	34	3.8
26	9	1.0	12	1.3	19	2.2	27	3.1	35	3.9
27	9	1.1	12	1.4	20	2.3	28	3.2	36	4.1
28	9	1.1	12	1.4	21	2.3	29	3.3	37	4.2
29	10	1.1	13	1.4	21	2.4	30	3.4	38	4.3
30	10	1.1	13	1.4	22	2.5	31	3.5	39	4.5

Load vs. Speed vs Conveyor Length Per Width

NOTE: Maximum conveyor loads based on:

- **Non-accumulating product**
- **Product moving towards gearmotor**
- **Conveyor being mounted horizontal**

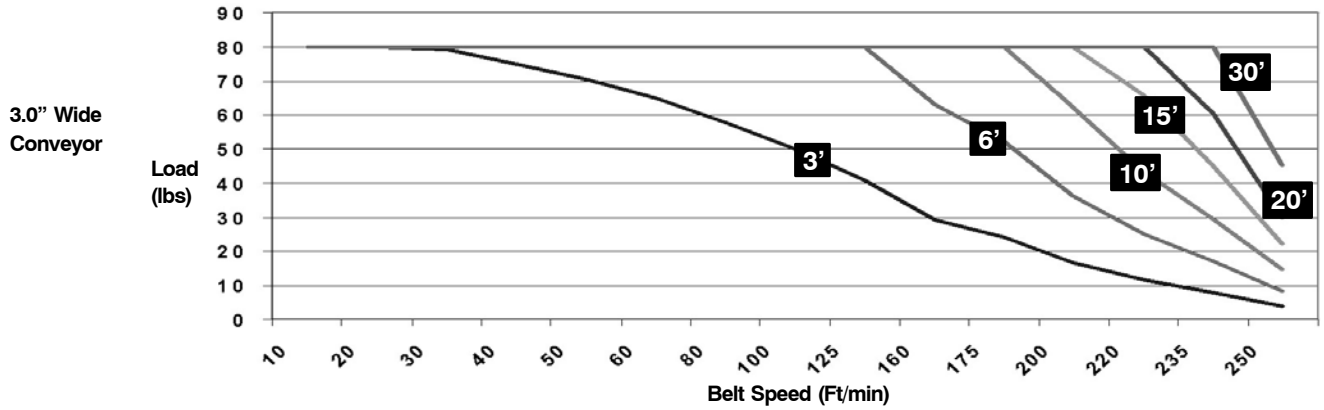

Specifications

5.25” Wide Conveyor

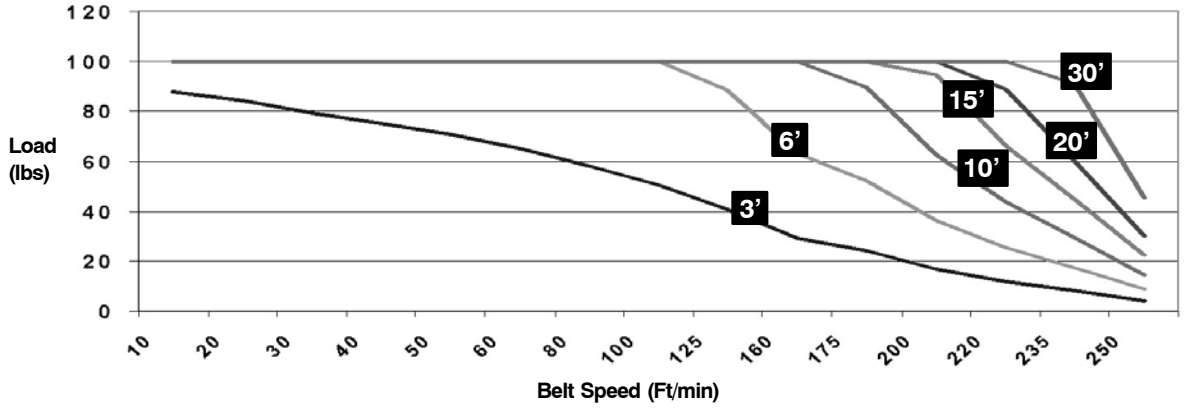

11.25” Wide Conveyor

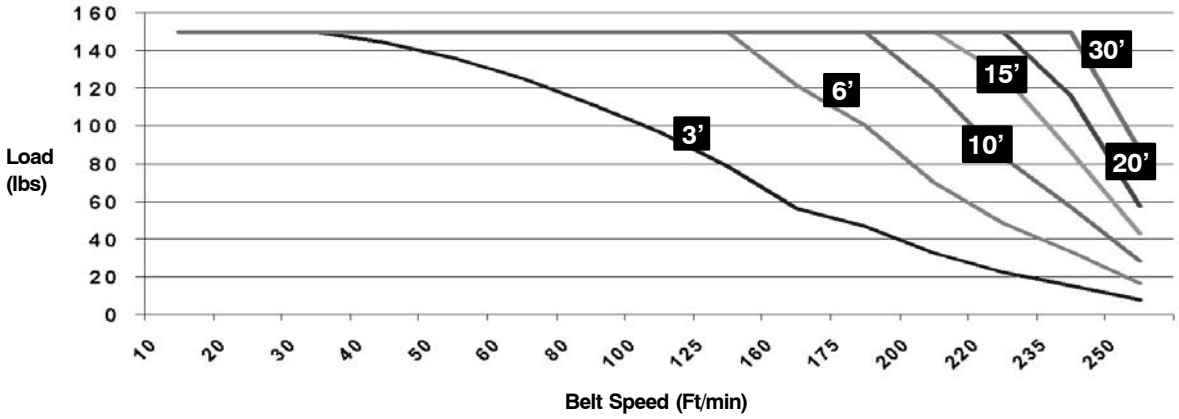

17.25” Wide Conveyor

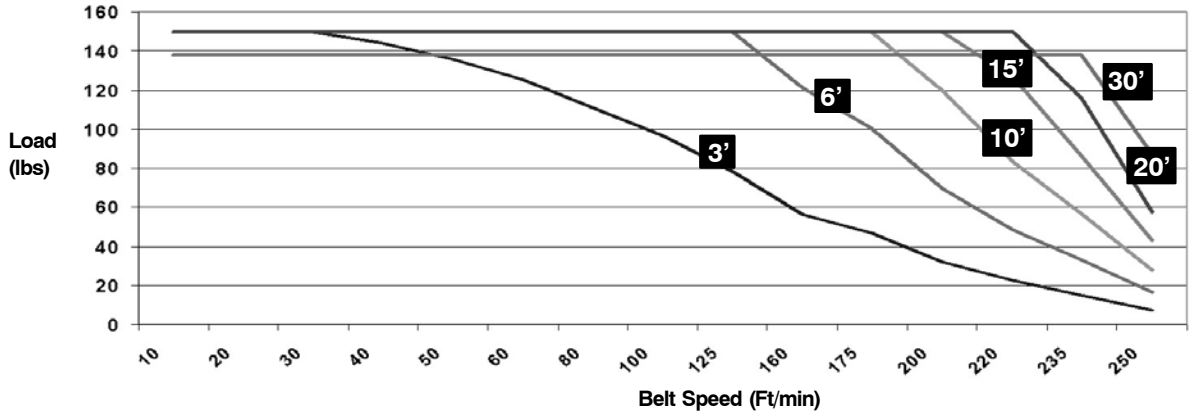

23.25” Wide Conveyor

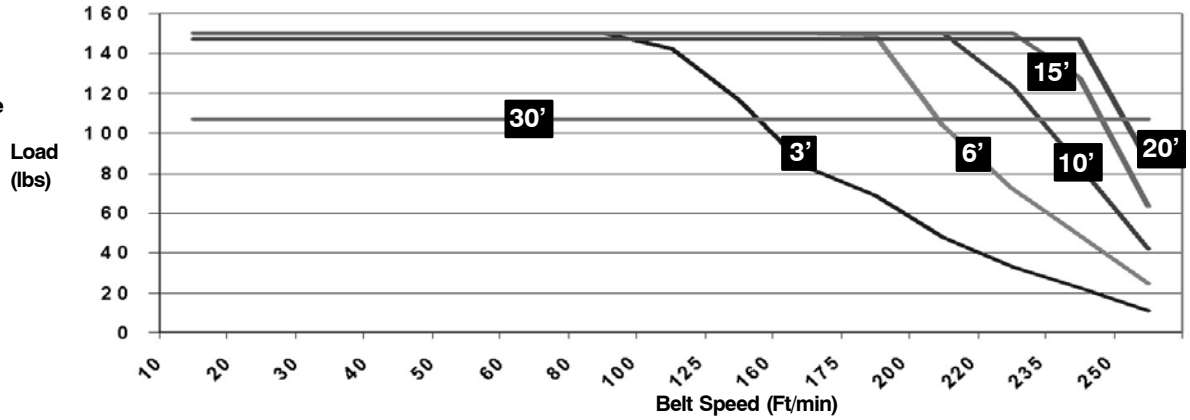

WARNING

MPB Series Conveyors are not reversible. Reversing creates pinch points which can cause severe injury.

DO NOT REVERSE MPB SERIES CONVEYORS.

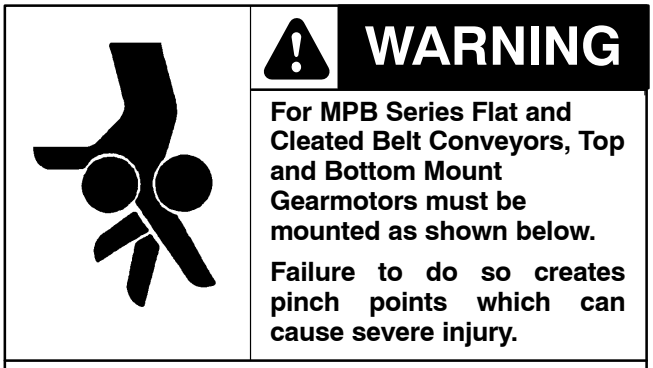

WARNING

For MPB Series Flat and Cleated Belt Conveyors, Top and Bottom Mount Gearmotors must be mounted as shown below.

Failure to do so creates pinch points which can cause severe injury.

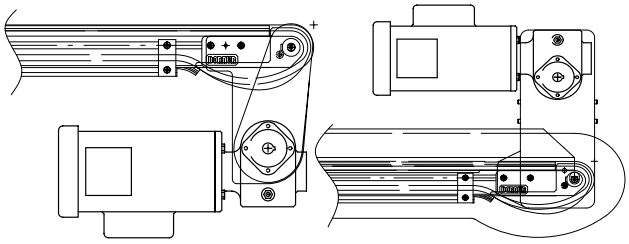

Flat Belt Bottom Mount **Cleated Belt Top Mount**

NOTE: Conveyor MUST be mounted straight, flat and level within confines of conveyor. Use a level (M of Figure 3) for setup.

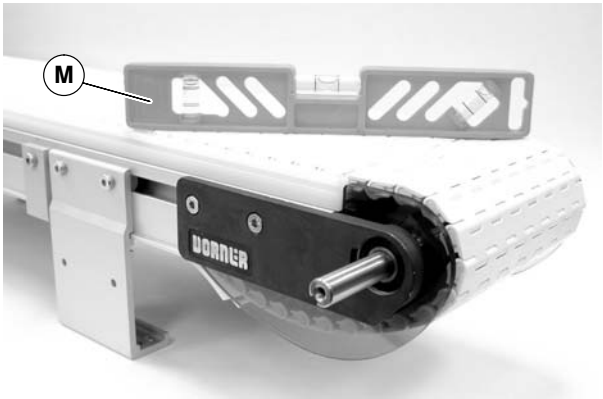

Figure 3

Required Tools

- Hex-key wrenches:
  4 mm, 5 mm
- Level
- Torque wrench
- 3/32” (2.4 mm) wide Flat Blade screwdriver

Recommended Installation Sequence

- Install support stands (see accessory instructions)
- Assemble conveyor frame(if required)(page 7)
- Attach mounting brackets to conveyor frame and stands (page 8)
- Install Belt (page 9)
- Mount gearmotor mounting package (see accessory instructions)
- Attach guides/accessories (see page 32 through 36 of “Service Parts” section for details)

Conveyors Up to 12 ft (3658 mm)

No assembly is required. Install mounting brackets. Refer to “Mounting Brackets” on page 8.

Conveyors Longer Than 12 ft (3658 mm)

NOTE: Conveyors shipped in multiple sections will have a return wearstrip extending from the end of the conveyor. See Figure 4.

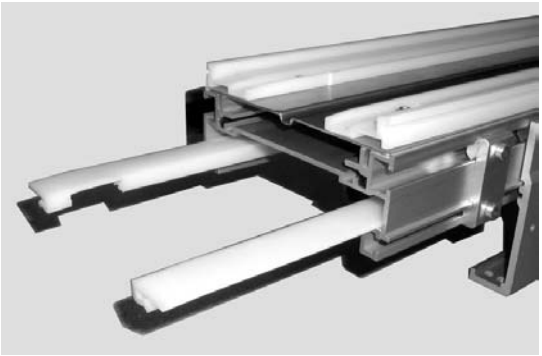

Figure 4

1. Locate conveyor sections (N Figure 5)

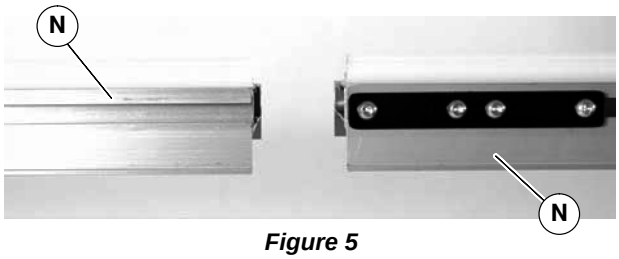

Figure 5

2. Join conveyor sections and install connector brackets (O of Figure 6) or connector/mount brackets (Q) and screws (P) on both sides as indicated.

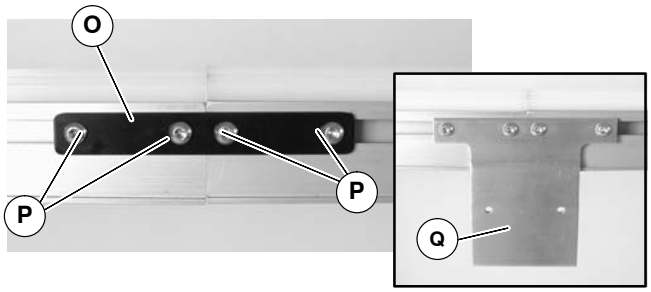

Figure 6

3. Snap the protruding return wear strip to the extrusion on the opposite side (R of Figure 7).

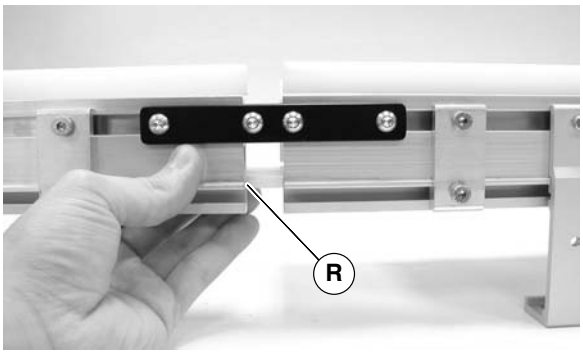

Figure 7

4. Tighten screw (P of Figure 6) to 60in–lb (7 N–m) on both sides of conveyor.

Mounting Brackets

1. Locate brackets. Exploded views shown in Figures 8 & 9.

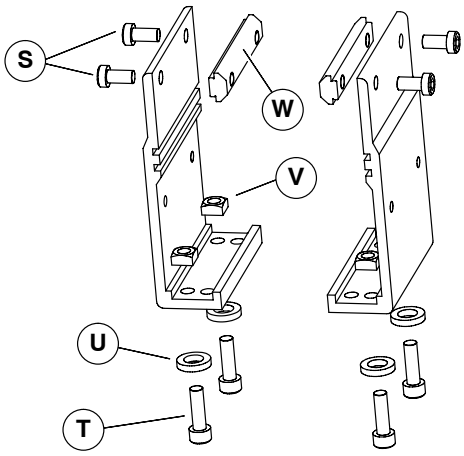

Mounting Brackets for Flat Belt Conveyor

Figure 8

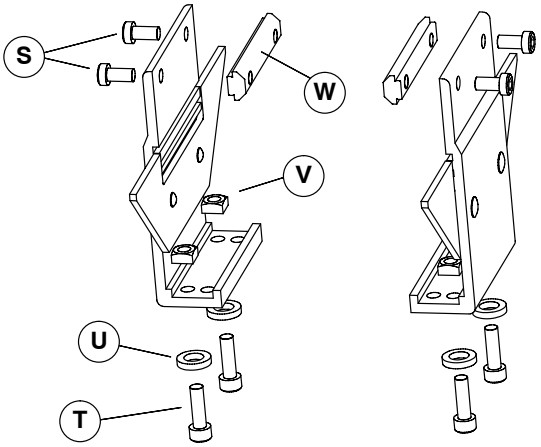

Mounting Brackets for Cleated Belt Conveyor

Figure 9

2. Remove screws (S & T of Figures 8 & 9), washers (U), nuts (V) and T-bars (W) from brackets.

3. Insert T-bars (W of Figures 8 & 9) into conveyor side slots (X of Figure 10). Fasten brackets (Y of Figure 10) to conveyor with mounting screws (S).

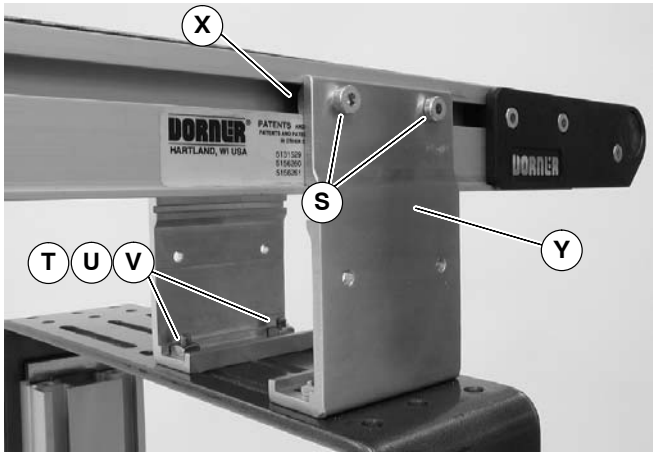

Figure 10

NOTE: Mounting brackets for flat belt conveyors shown.

4. Fasten brackets to support stand with mounting screws (T of Figure 10), washers (U) and nuts (V).

5. Tighten screws (S & T of Figure 10) to 60 in-lb (7 N–m).

Installing Plastic Belt

NOTE: 17.25" and 23.25" wide plastic belt will correctly operate in one direction only. Ensure the belt is installed in the correct orientation. Refer to step 2 below for details.

1. Locate the conveyor belt retaining rod (Z of Figure 11) and belt end caps (AA).

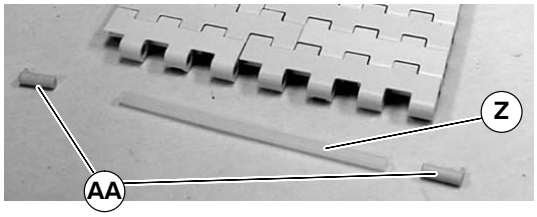

Figure 11

2. For 17.25" wide and 23.25" wide belts, align the belt to the retained center sprocket(AB of Figure 12) on the drive end of the conveyor.

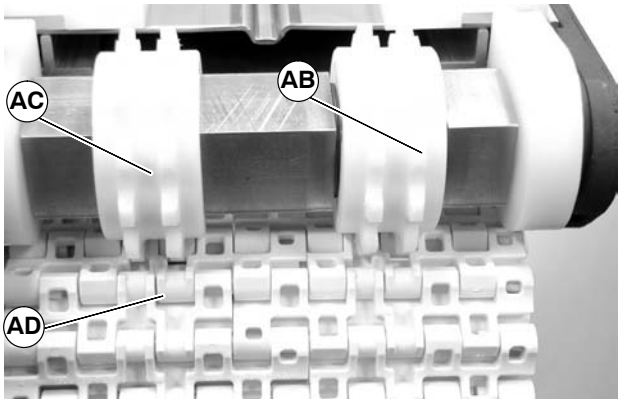

Figure 12

3. Feed belt into bottom wear strips (AE of Figure 13) and pull through to the far end.

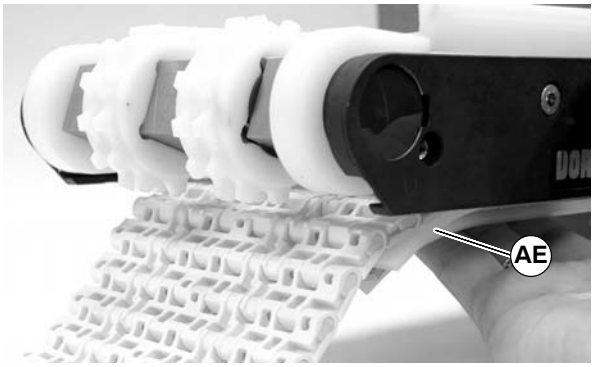

Figure 13

4. Aligning free moving sprocket(s)(AC of figure 12) to the drive pocket(s)(AD). Wrap belt around sprockets and pull towards idler end.
5. Repeat step 4 for the idler end of conveyor.
6. Splice the belt together by pushing the plastic rod (AF of Figure 14) through the side hole.

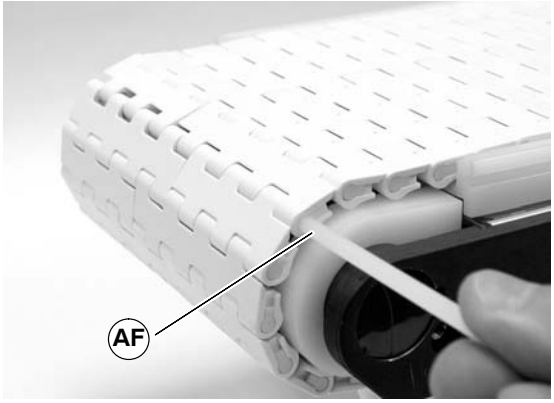

Figure 14

7. Insert rod retaining end caps (AG of figure 15) on both sides of belt.

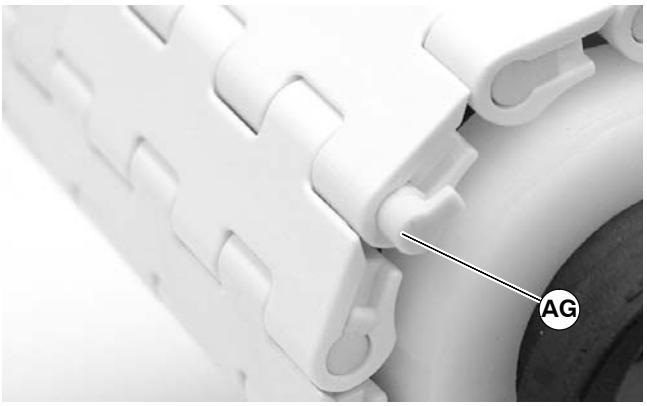

Figure 15

8. See "Conveyor Belt Tensioning" section on page 12 for details on belt tension.

Preventive Maintenance and Adjustment

Required Tools

Standard Tools

- Hex-key wrenches:
  2.5 mm, 4 mm, 5 mm
- 3/32” (2.4 mm) wide Flat Blade screw driver
- Arbor press
- Adjustable wrench to 1” (25 mm) wide

Special Tools

- 807–1078 Sealed Bearing Removal Tool
- 450292 Sealed Bearing Installation Tool

Checklist

- Keep service parts on hand (see “Service Parts” section for recommendations)
- Keep supply of belt cleaner (part # 625619)
- Clean entire conveyor while disassembled
- Replace worn or damaged parts

Lubrication

No lubrication is required. Replace bearings if worn.

Maintaining Conveyor Belt

Troubleshooting

Inspect conveyor belt for:

- Surface cuts or wear
- Tooth skipping
- Loose links

Surface cuts and wear indicate:

- Sharp or heavy parts impacting belt
- Jammed parts
- Foreign material inside the conveyor
- Improperly positioned accessories
- Bolt-on guiding is pinching belt

Stalling or skipping belt indicates:

- Belt stretching
- Conveyor belt or drive timing belt are not properly tensioned
- Worn sprocket or impacted dirt on drive pulley
- Intermittent jamming or drive train problems

NOTE: Visit www.dorner.com for complete list of troubleshooting solutions.

Cleaning

IMPORTANT: Do not use belt cleaners that contain alcohol, acetone, Methyl Ethyl Ketone (MEK) or other harsh chemicals.

Use Dorner Belt Cleaner (part # 625619). Mild soap and water may also be used. Do not soak the belt.

Conveyor Belt Replacement

WARNING

Exposed moving parts can cause severe injury.

LOCK OUT POWER before removing guards or performing maintenance.

Conveyor Belt Replacement Sequence

- Remove old conveyor belt
- Install new conveyor belt
- Tension conveyor belt

Belt Removal

1. On idler end of the conveyor identified with a label (AH of figure 16), loosen fastening screws (AI of figure 16) on both sides of conveyor. Push head plate assembly (AJ) inward.

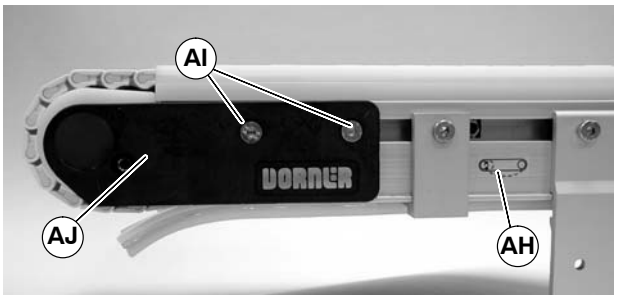

Figure 16

2. Choose one link on the idler end of chain to remove endcaps. With a 3/32” (2.4 mm) flat blade screwdriver, pry under tab of end caps (AK of Figure 17) and remove end cap. Repeat for opposite side of conveyor.

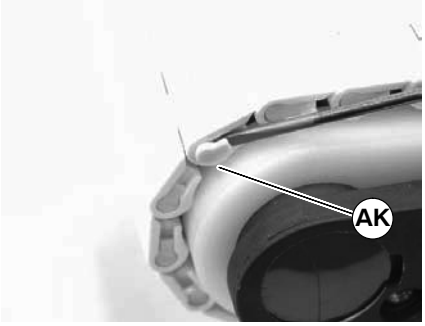

Figure 17

3. Insert screwdriver (AL of figure 18) into one side of belt, pushing rod (AM) out. Remove rod and separate belt.

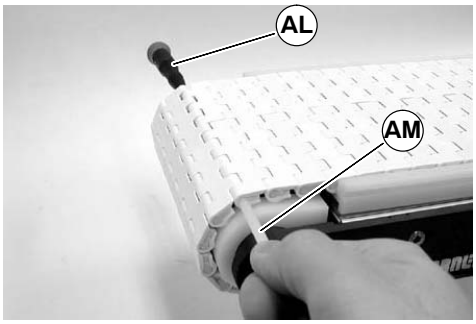

Figure 18

4. Pull back topside of belt to the drive end of the conveyor. See figure 19.

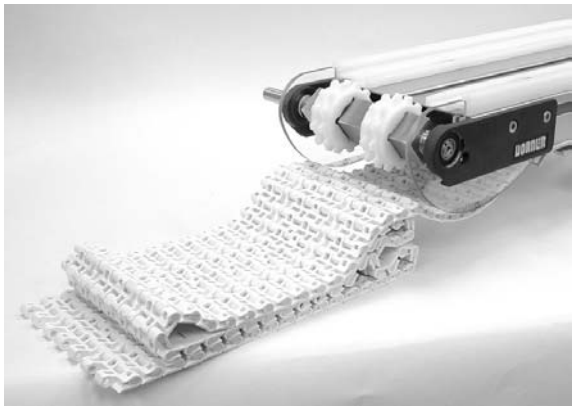

Figure 19

5. Remove belt by pulling belt out of bottom wear strips. See figure 20.

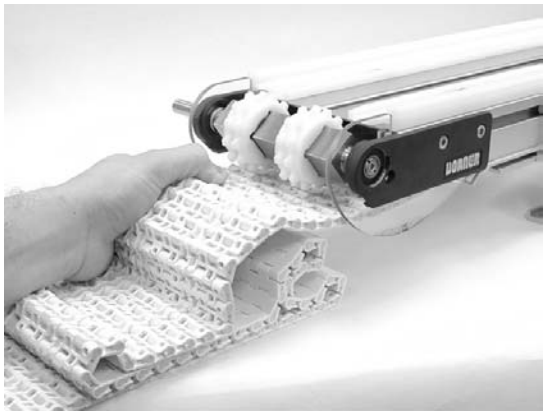

Figure 20

Belt Installation

1. See “Installing Plastic Belt” page 9.

Conveyor Belt Tensioning

WARNING

Exposed moving parts can cause severe injury.

LOCK OUT POWER before removing guards or performing maintenance.

NOTE: The MPB Series Plastic Belt Conveyor is designed to operate with minimal belt tension. The belt sag guard (AN of figure 21) provides information to the proper belt tension. Figure 21 indicates minimum belt sag. Figure 22 indicates maximum belt sag. Belt sag beyond that indicated in Figure 22 must be tensioned see below for details.

Figure 21

Figure 22

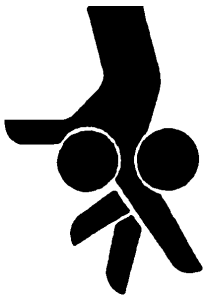

WARNING

Operating conveyor with belt sag beyond maximum shown in figure 22 will create belt pinch points which can cause injury.

TENSION CONVEYOR BELT IF MAXIMUM SAG IS REACHED

Belt tensioning may be done by two methods:

- A – Extending idler end
- B – Removal of belt links

A – Extending Idler End

1. On tension end of the conveyor, identified with a label (AH of Figure 23), on both sides of conveyor, loosen fastening screws (AI). Insert 5mm Hex wrench into pinion gear (AO) and rotate to extend head plate assembly(AH).

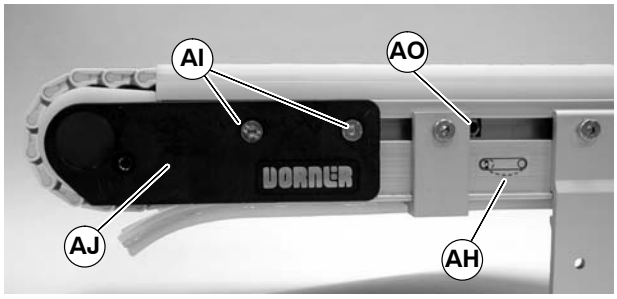

Figure 23

2. Extend head plate assembly so belt sag is between minimum shown in figure 21 and maximum shown in figure 22. If proper tensioning cannot be obtained before (AP of Figure 24) is even with the end of the conveyor frame (AQ), belt links must then be removed. See section “B Removal of Belt Links”.

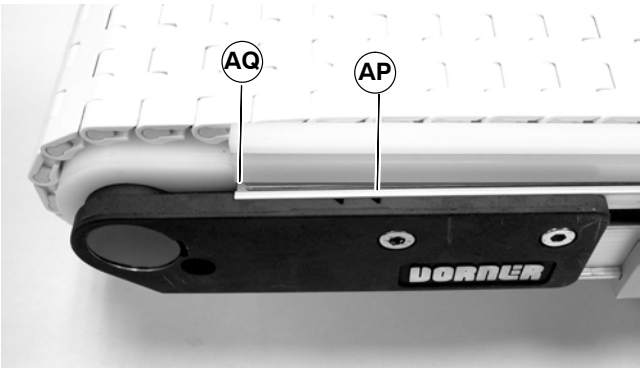

Figure 24

3. After adjusting proper tensioning, tighten fastening screws (AI of Figure 23) on both sides of conveyor to 60 in-lb (7 N–m).

B – Removal of Belt Links

1. Choose one link on the idler end of chain to remove endcaps. With a 3/32” (2.4 mm) flat blade screwdriver, pry under tab of end caps (AK of Figure 25) and remove end cap. Repeat for opposite side of conveyor.

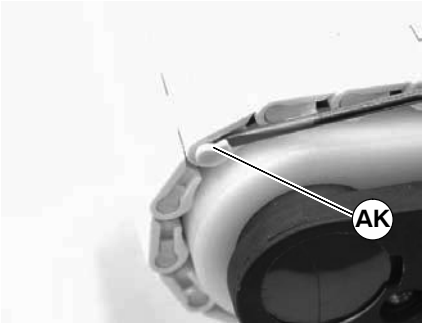

Figure 25

2. Insert screwdriver (AR of figure 26) into one side of belt, pushing rod (AS) out. Remove rod and separate belt.

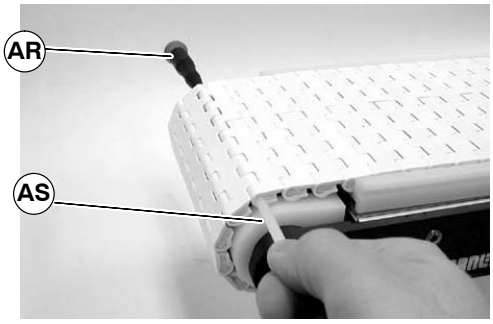

Figure 26

3. Determine the number of links to be removed. Start with 1 link and progress if additional tensioning is required repeat steps 1 and 2.

4. Splice the belt together by pushing the plastic rod (AF of Figure 27) through the side hole.

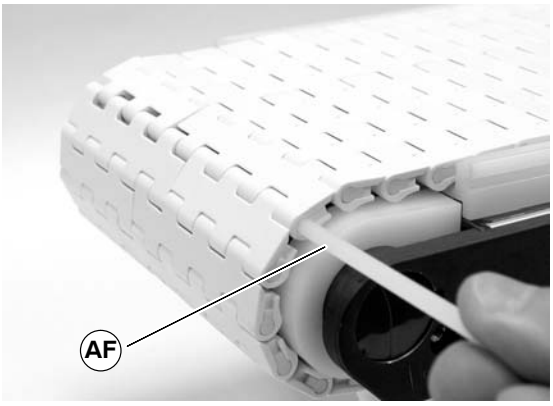

Figure 27

5. Insert rod retaining end caps (AG of figure 28) on both sides of belt.

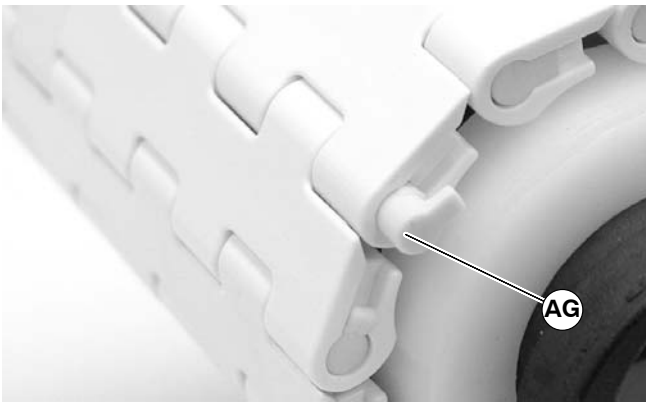

Figure 28

6. Review belt sag at drive end to ensure it is between minimum shown in figure 21 and maximum shown in figure 22. If additional tensioning is required repeat steps 1 through 5.

Pulley and Sprockets Removal

WARNING

Exposed moving parts can cause severe injury.

LOCK OUT POWER before removing guards or performing maintenance.

Remove conveyor belt to access pulley(s). See "Conveyor Belt Replacement" on page 10. Remove the desired pulley following the corresponding instructions below:

- A – Idler Pulley and Sprockets Removal
- B – Drive Pulley and Sprockets Removal

A – Idler Pulley and Sprockets Removal

1. On side of conveyor, loosen two (2) fastening screws (AI of Figure 29). Remove head plate and spindle at the same time.

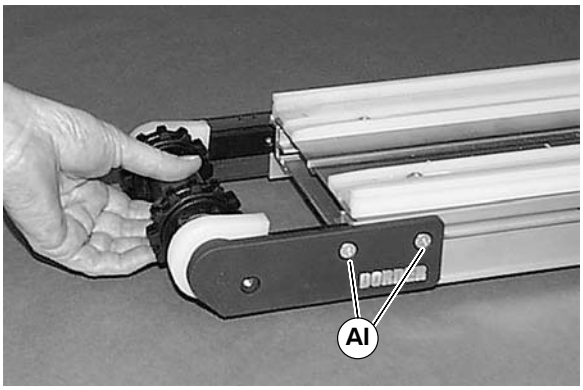

Figure 29

2. Slide idler end guard (AU of Figure 30) from ends of pulley (AT).

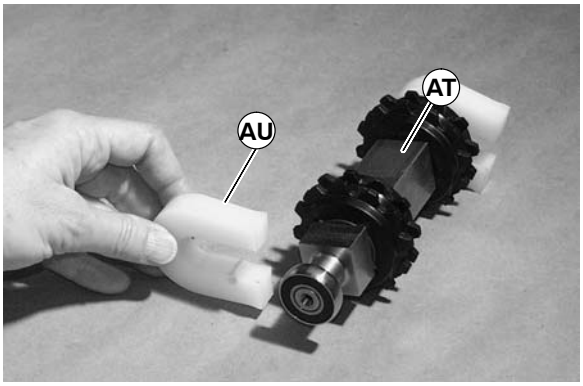

Figure 30

3. Slide free moving sprocket(s) (AV of Figure 31) off the end of pulley (AT).

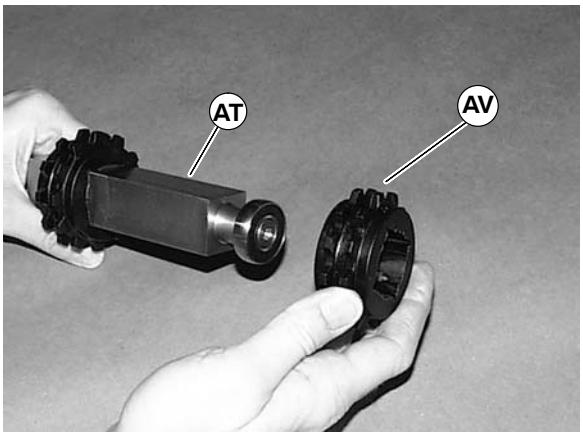

Figure 31

4. Remove snap rings (AW of Figure 32). Slide drive sprocket (AX) off the end of pulley (AT).

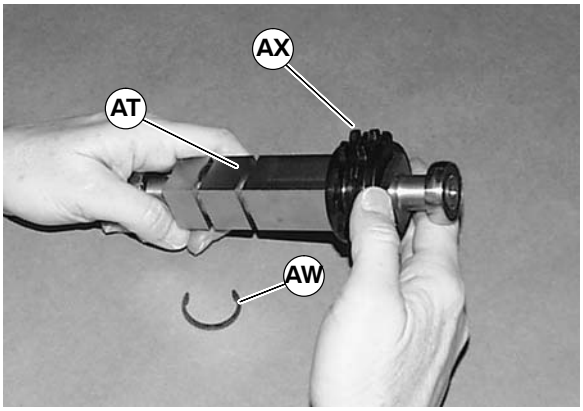

Figure 32

B – Drive Pulley and Sprockets Removal

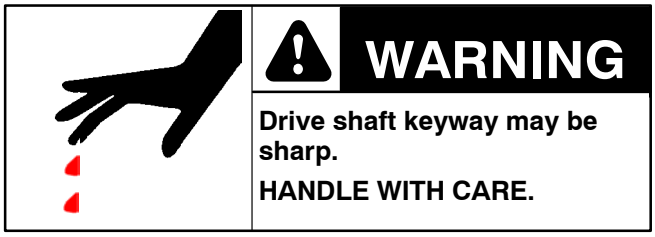

1. On side of conveyor, loosen two (2) fastening screws (AY of Figure 33). Remove head plate and spindle at same time.

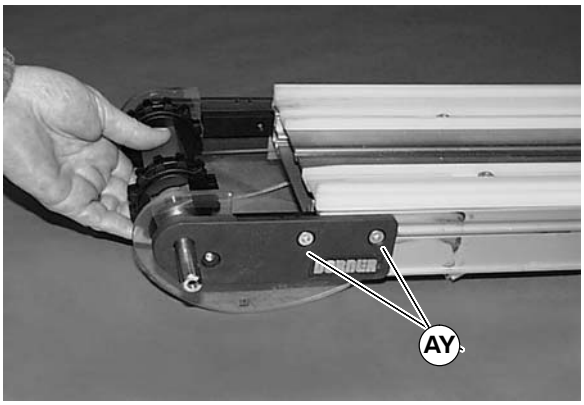

Figure 33

2. Slide free moving sprocket(s) (BA of Figure 34) off the end of pulley (AZ).

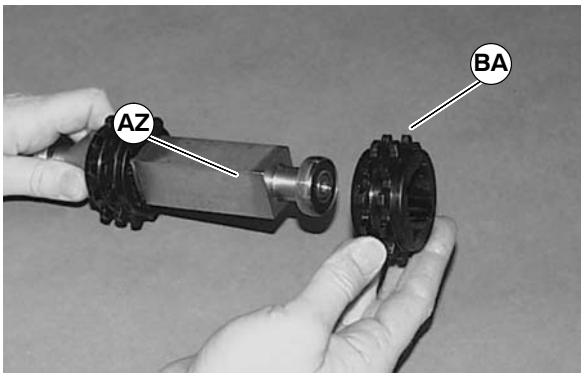

Figure 34

3. Remove snap rings (BB of Figure 35). Slide drive sprocket (BC) off the end of pulley (AZ).

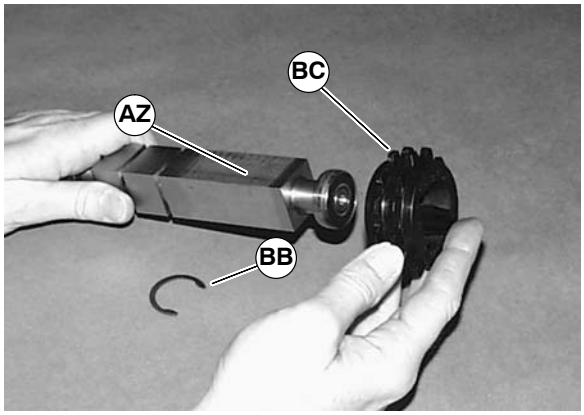

Figure 35

Bearing Removal & Replacement

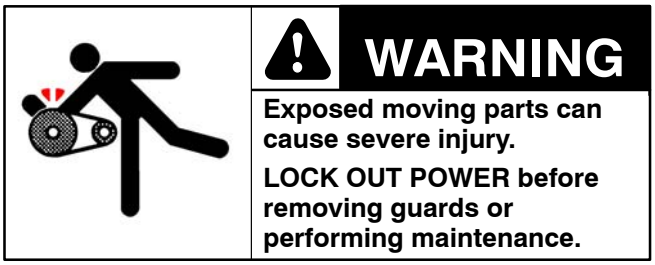

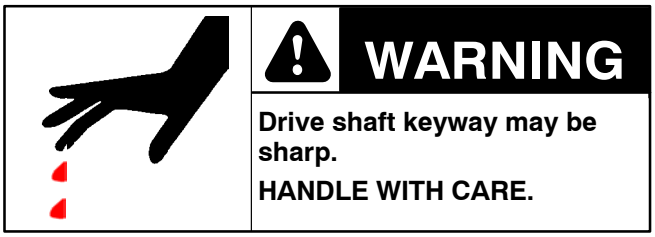

Removal

1. Remove idler pulley or drive pulley. For idler pulley see section “A – Idler Pulley and Sprockets Removal,” steps 1 through 4. For drive pulley see section “B – Drive Pulley and Sprockets Removal,” steps 1 through 3.

2. Use bearing removal tool (807-1078) (BD of Figure 36) to remove bearings from idler and drive pulleys.

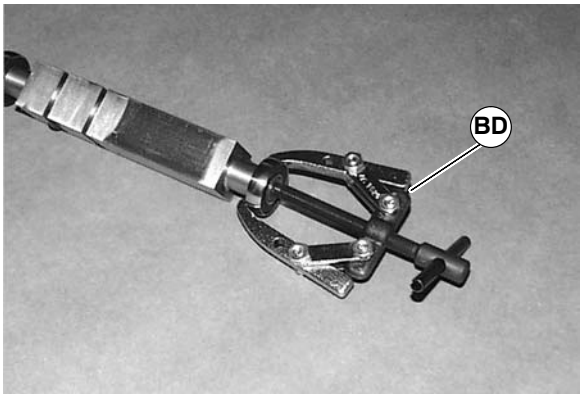

Figure 36

Replacement

1. Inspect head plate bearing surface. If worn or damaged, replace head plate. See "Service Parts" on page 20.

Pulley and Sprockets Replacement

Drive Pulley and Sprockets

1. Press bearing onto drive pulley using installation tool 456085 (BE of Figure 37).

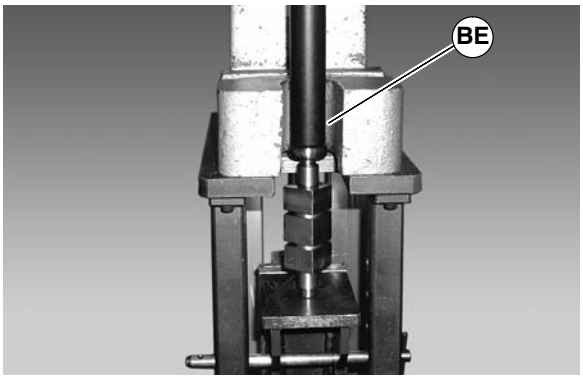

Figure 37

2. Install drive sprocket (BC of Figure 38) with snap rings (BB) to pulley (AZ).

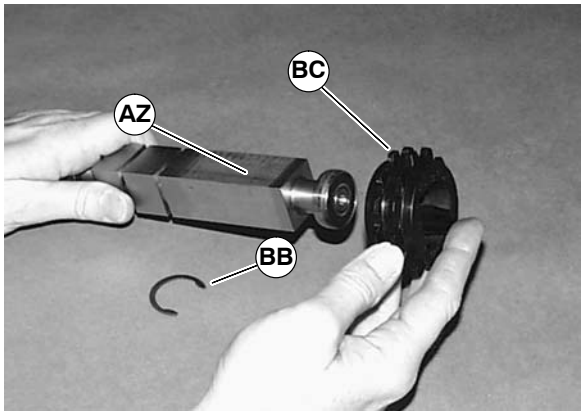

Figure 38

3. As required, install free moving sprockets as per Figure 39. Items in bold are the fixed drive sprockets.

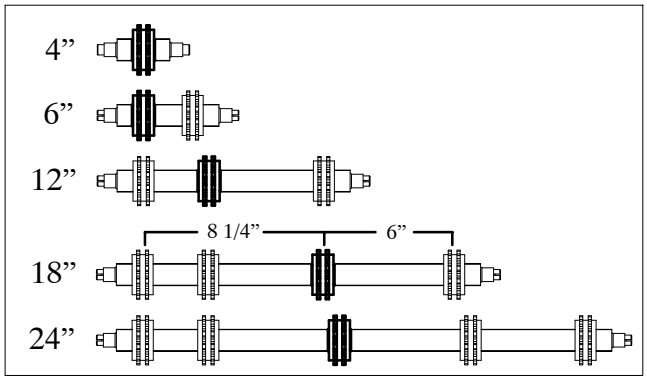

Figure 39

4. Install pulley assembly on conveyor. Slide spindle into installed head plate (Figure 40).

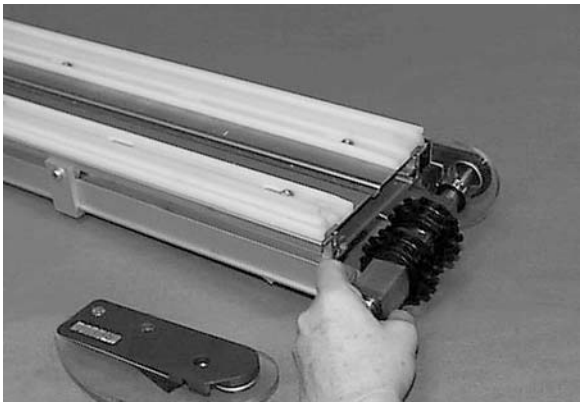

Figure 40

5. Slide remaining head plate on to end of spindle and tighten fastening screws (AY of Figure 41) to 60 in-lb (7 N–m).

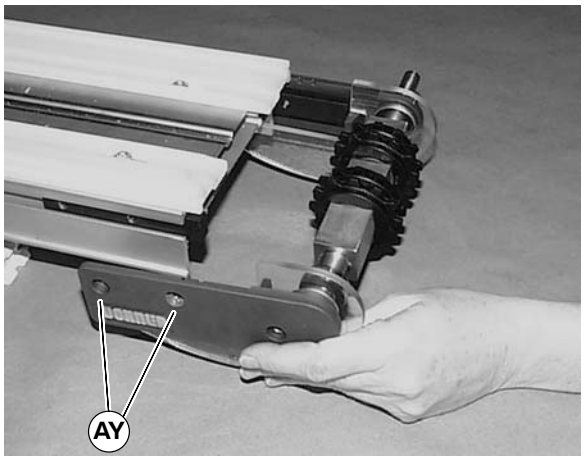

Figure 41

Idler Pulley and Sprockets

1. Install drive sprocket (AX of Figure 42) with snap rings (AW) to pulley (AT).

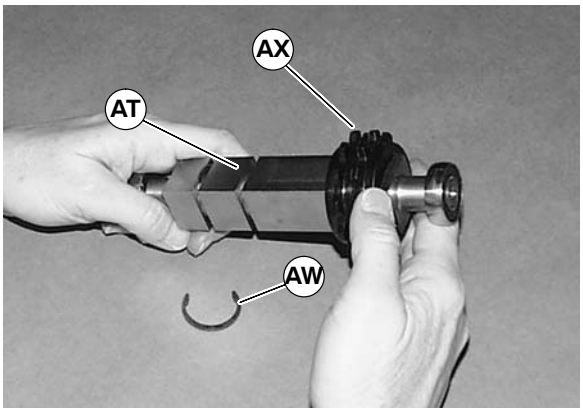

Figure 42

2. As required, install free moving sprockets as per Figure 43. Items in bold are the fixed drive sprockets.

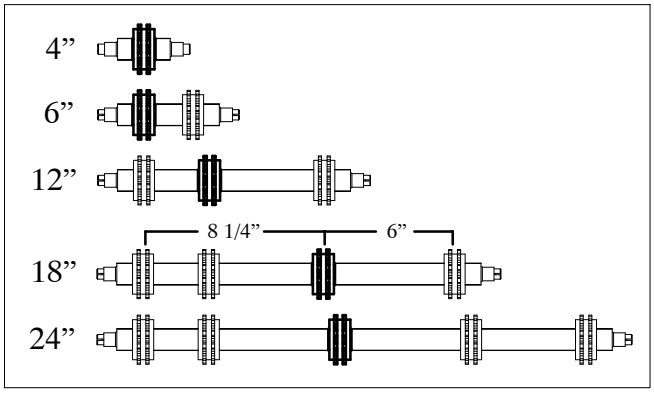

Figure 43

3. Install pulley assembly on conveyor. Slide spindle into installed head plate (Figure 44).

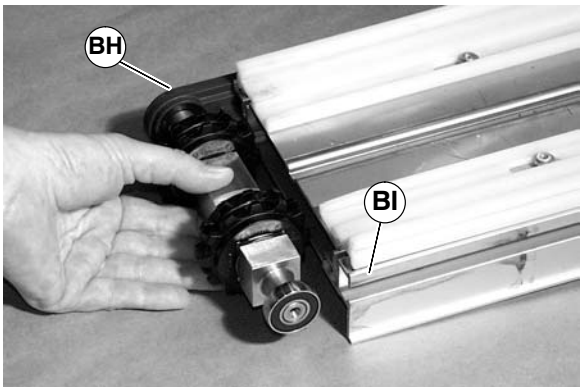

Figure 44

4. Slide remaining head plate on to end of spindle and tighten fastening screws (AI of Figure 45) to 60 in-lb (7 N-M).

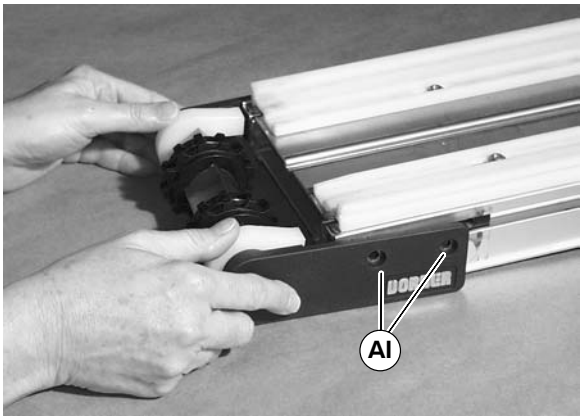

Figure 45

Upper Wear Strip Replacement

WARNING

Exposed moving parts can cause severe injury.

LOCK OUT POWER before removing guards or performing maintenance.

1. Remove conveyor belt. See “Belt Removal” section on page 10.

2. With a T−20 Torx head wrench, remove screw (BJ of Figure 46) and bushings (BK).

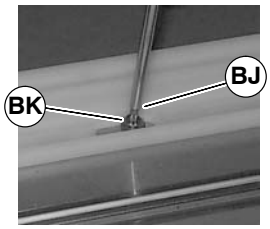

Figure 46

3. Remove old wear strip (Figure 47).

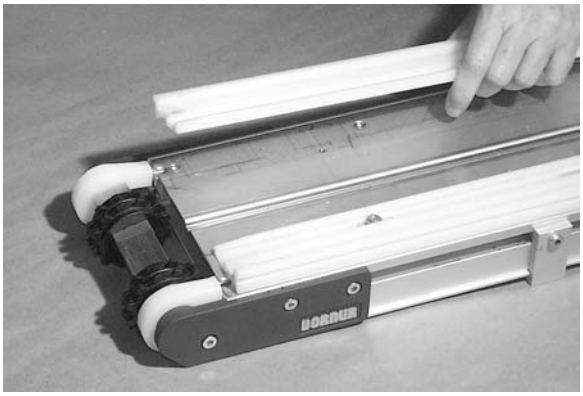

Figure 47

4. Install new wear strip (Figure 48), with bushings (BK) and screws (BJ). Tighten screws to 25 in-lb (2.8 N-m).

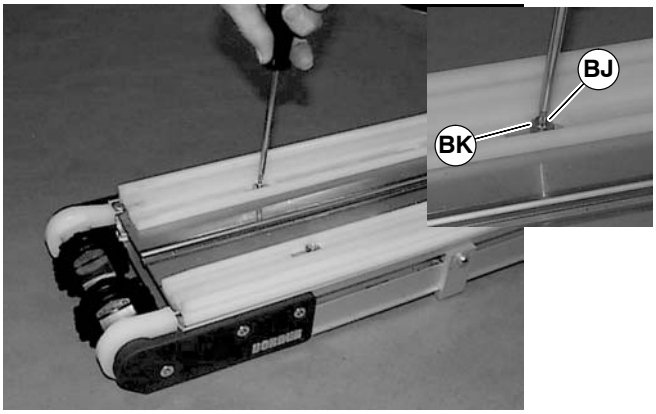

Figure 48

Return Wear Strip Replacement

WARNING

Exposed moving parts can cause severe injury.

LOCK OUT POWER before removing guards or performing maintenance.

1. Remove old wear strip (BL) by sliding off of support extrusion (BM of Figure 50).

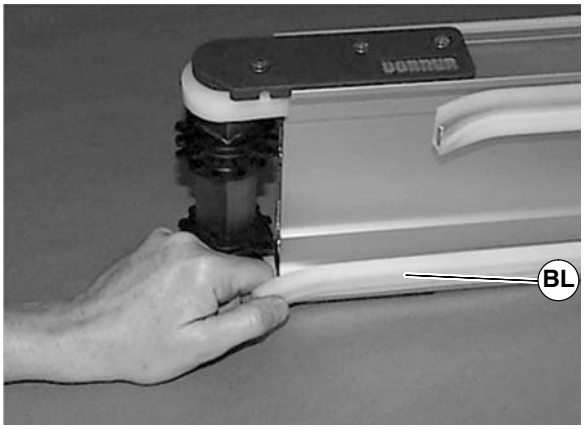

Figure 49

2. Install new wearstrip onto support extrusion (BM).

Figure 50

Service Parts

NOTE: For replacement parts other than those shown in this section, contact an authorized Dorner Service Center or the factory. Key Service Parts and Kits are identified by the Performance Parts Kits logo. Dorner recommends keeping these parts on hand.

4” (102mm) and 6” (152mm) Wide Conveyor Assembly

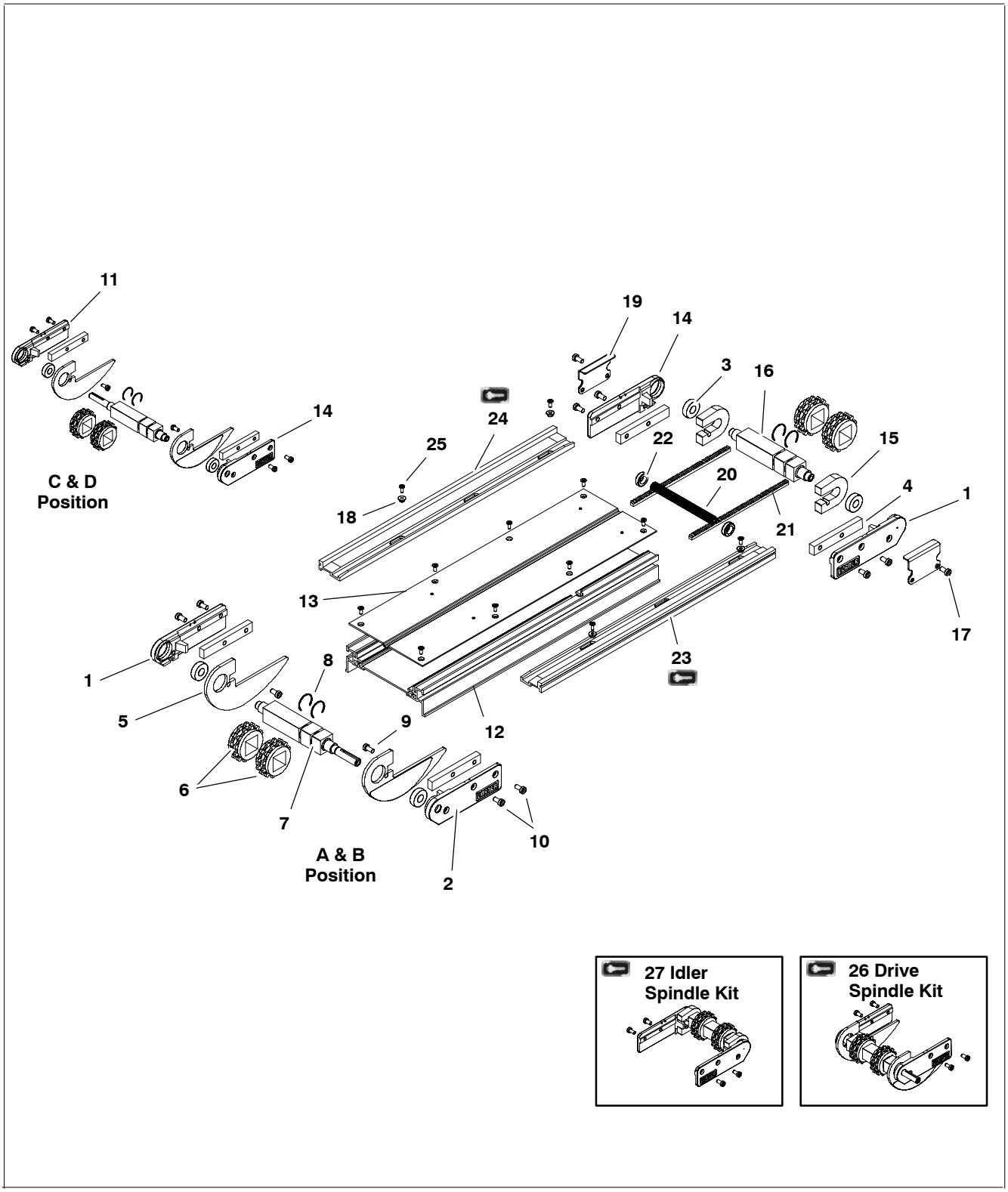

Item	Part Number	Description
1	240426	Head Plate RH
2	240427	Head Plate LH Drive Side, Position A and B
3	240328	Bearing
4	240329	Tension Slide Bar
5	245858	Sag Guard
6	245863	Sprocket
7	2475WW	Drive Spindle
8	807–1108	Retaining Ring
9	920691M	Socket Head Screw M6 x 10mm
10	920692M	Socket Head Screw M6 x 12mm
11	240428	Head Plate RH Drive Side, Position C and D
12	See Chart Below	Conveyor Frame
13	See Chart Below	Bed Plate
14	240425	Head Plate LH
15	245850	Pinch Guard Plate
16	2474WW	Idler Spindle
17	920694M	Socket Head Screw M6 x 20mm
18	245854	Screw Sleeve
19	245625	Gap Guard Clip
20	2030WWM	Gear Pinion
21	240420	Rack Gear 14.5 Degree PA x 24 P
22	240421	Pinion Bushing
23	245827–LLLL	LH Outer Wear Strip – UHMW
	245828–LLLL	LH Outer Wear Strip – Antistat
24	245829–LLLL	RH Outer Wear Strip – UHMW
	245830–LLLL	RH Outer Wear Strip – Antistat
25	807–1105	Torx, Flat Head M4 x 10mm
26	MPBA–WW	Drive Spindle Kit, Position A and B (Includes Items 1, 2, 3, and 5 through 10)
	MPBD–WW	Drive Spindle Kit, Position C and D (Includes Items 3, 5 through 11 and 14)
27	MPBT–WW	Idler Spindle Kit (Includes Items 1, 3, 6, 8, 10, and 14 through 17)
WW = Conveyor width reference: 04, 06		

Item 12: Conveyor Frame		
Length	Part Number	
2’ (610mm)	2404WW–01900	
3’ (914mm)	2404WW–03100	
4’ (1219mm)	2404WW–04300	
5’ (1524mm)	2404WW–05500	
6’ (1829mm)	2404WW–06700	
7’ (2134mm)	2404WW–07900	
8’ (2438mm)	2404WW–09100	
9’ (2743mm)	2404WW–10300	
10’ (3048mm)	2404WW–11500	
11’ (3353mm)	2404WW–12700	
12’ (3658mm)	2404WW–13900	
13’ (3962mm)	2404WW–07200	2404WW–07900
14’ (4267mm)	2404WW–07200	2404WW–09100
15’ (4572mm)	2404WW–07200	2404WW–10300
16’ (4877mm)	2404WW–07200	2404WW–11500
17’ (5182mm)	2404WW–07200	2404WW–12700
18’ (5486mm)	2404WW–07200	2404WW–13900
19’ (5791mm)	2404WW–07900	2404WW–14400
20’ (6096mm)	2404WW–09100	2404WW–14400
21’ (6401mm)	2404WW–10300	2404WW–14400
22’ (6706mm)	2404WW–11500	2404WW–14400
23’ (7010mm)	2404WW–12700	2404WW–14400
24’ (7315mm)	2404WW–13900	2404WW–14400
25’ (7620mm)	2404WW–07900 2404WW–07200	 2404WW–14400
26’ (7925mm)	2404WW–09100 2404WW–07200	 2404WW–14400
27’ (8230mm)	2404WW–10300 2404WW–07200	 2404WW–14400
28’ (8534mm)	2404WW–11500 2404WW–07200	 2404WW–14400
29’ (8839mm)	2404WW–12700 2404WW–07200	 2404WW–14400
30’ (9144mm)	2404WW–13900 2404WW–07200	 2404WW–14400
WW = Conveyor width reference: 04, 06		

Service Parts

Item 13: Bed Plate	
Length	Part Number
2' (610mm)	2452WW–01892
3' (914mm)	2452WW–03092
4' (1219mm)	2452WW–04292
5' (1524mm)	2452WW–05492
6' (1829mm)	2452WW–06692
7' (2134mm)	2452WW–07892
8' (2438mm)	2452WW–09092
9' (2743mm)	2452WW–10292
10' (3048mm)	2452WW–11492
11' (3353mm)	2452WW–12692
12' (3658mm)	2452WW–13892
13' (3962mm)	2452WW–07196 2452WW–07892
14' (4267mm)	2452WW–07196 2452WW–09092
15' (4572mm)	2452WW–07196 2452WW–10292
16' (4877mm)	2452WW–07196 2452WW–11492
17' (5182mm)	2452WW–07196 2452WW–12692
18' (5486mm)	2452WW–07196 2452WW–13892
19' (5791mm)	2452WW–07892 2452WW–14396
20' (6096mm)	2452WW–09092 2452WW–14396
21' (6401mm)	2452WW–10292 2452WW–14396
22' (6706mm)	2452WW–11492 2452WW–14396
23' (7010mm)	2452WW–12692 2452WW–14396
24' (7315mm)	2452WW–13892 2452WW–14396
25' (7620mm)	2452WW–07892 2452WW–07196 2452WW–14396
26' (7925mm)	2452WW–09092 2452WW–07196 2452WW–14396
27' (8230mm)	2452WW–10292 2452WW–07196 2452WW–14396
28' (8534mm)	2452WW–11492 2452WW–07196 2452WW–14396
29' (8839mm)	2452WW–12692 2452WW–07196 2452WW–14396
30' (9144mm)	2452WW–13892 2452WW–07196 2452WW–14396
WW = Conveyor Width reference: 04, 06	

12” (305mm) Wide Conveyor Assembly

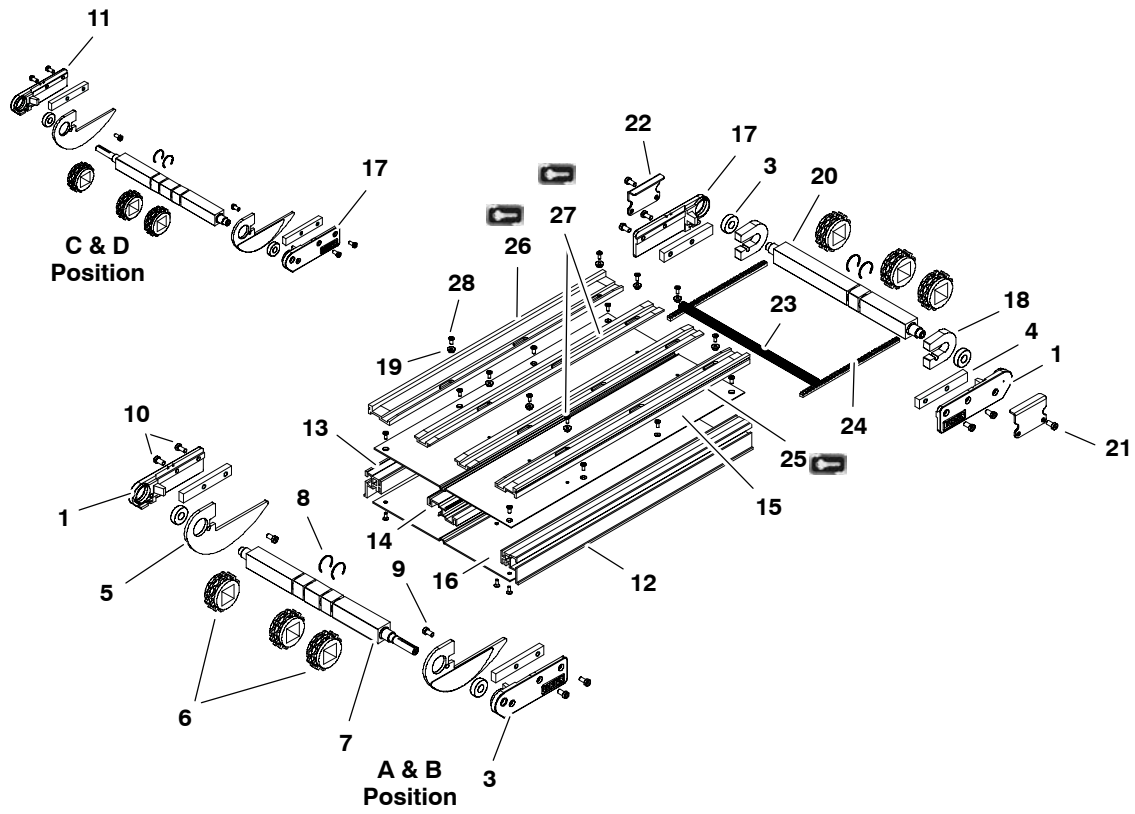

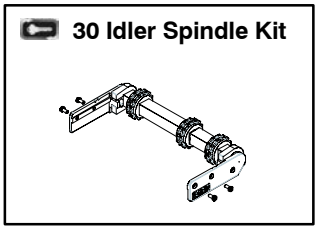

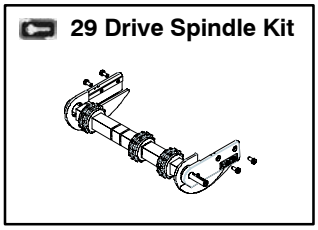

Item	Part Number	Description
1	240426	Head Plate RH
2	240427	Head Plate LH Drive Side, Position A and B
3	240328	Bearing
4	240329	Tension Slide Bar
5	245858	Sag Guard
6	245863	Sprocket
7	247512	Drive Spindle
8	807–1108	Retaining Ring

9	920691M	Socket Head Screw M6 x 10mm
10	920692M	Socket Head Screw M6 x 12mm
11	240428	Head Plate RH Drive Side, Position C and D
12	See Chart Below	Side Rail RH
13	See Chart Below	Side Rail LH
14	See Chart Below	Center Rail

15	See Chart Below	Bed Plate Top
16	See Chart Below	Bed Plate Bottom
17	240425	Head Plate LH
18	245850	Pinch Guard Plate
19	245854	Screw Sleeve
20	247412	Idler Spindle
21	920693M	Socket Head Screw M6 x 16mm
22	245625	Gap Guard Clip
23	203012M	Gear Pinion
24	240420	Rack Gear 14.5 Degree PA x 24 P
25	245827–LLLL	LH Outer Wear Strip – UHMW
	245828–LLLL	LH Outer Wear Strip – Antistat
26	245829–LLLL	RH Outer Wear Strip – UHMW
	245830–LLLL	RH Outer Wear Strip – Antistat
27	245831–LLLL	Center Wear Strips – UHMW
	245832–LLLL	Center Wear Strips – Antistat
28	807–1105	Torx, Flat Head M4 x 10mm
29	MPBA–12	Drive Spindle Kit, Position A and B (Includes Items 1, 2, 3, and 5 through 10)
	MPBD–12	Drive Spindle Kit, Position C and D (Includes Items 3, 5 through 11 and 17)
30	MPBT–12	Idler Spindle Kit (Includes Items 1, 3, 6, 8, 10, and 17 through 20)

Item 12: Side Rail RH 12” Wide (305mm)	
Length	Part Number
2’ (610mm)	240412–01900
3’ (914mm)	240412–03100
4’ (1219mm)	240412–04300
5’ (1524mm)	240412–05500
6’ (1829mm)	240412–06700
7’ (2134mm)	240412–07900
8’ (2438mm)	240412–09100
9’ (2743mm)	240412–10300
10’ (3048mm)	240412–11500
11’ (3353mm)	240412–12700
12’ (3658mm)	240412–13900
13’ (3962mm)	240412–07200 240412–07900
14’ (4267mm)	240412–07200 240412–09100
15’ (4572mm)	240412–07200 240412–10300
16’ (4877mm)	240412–07200 240412–11500
17’ (5182mm)	240412–07200 240412–12700
18’ (5486mm)	240412–07200 240412–13900
19’ (5791mm)	240412–07900 240412–14400
20’ (6096mm)	240412–09100 240412–14400
21’ (6401mm)	240412–10300 240412–14400
22’ (6706mm)	240412–11500 240412–14400
23’ (7010mm)	240412–12700 240412–14400
24’ (7315mm)	240412–13900 240412–14400
25’ (7620mm)	240412–07900 240412–07200 240412–14400
26’ (7925mm)	240412–09100 240412–07200 240412–14400
27’ (8230mm)	240412–10300 240412–07200 240412–14400
28’ (8534mm)	240412–11500 240412–07200 240412–14400
29’ (8839mm)	240412–12700 240412–07200 240412–14400
30’ (9144mm)	240412–13900 240412–07200 240412–14400

Item 13: Side Rail LH 12” Wide (305mm)	
Length	Part Number
2’ (610mm)	240413–01900
3’ (914mm)	240413–03100
4’ (1219mm)	240413–04300
5’ (1524mm)	240413–05500
6’ (1829mm)	240413–06700
7’ (2134mm)	240413–07900
8’ (2438mm)	240413–09100
9’ (2743mm)	240413–10300
10’ (3048mm)	240413–11500
11’ (3353mm)	240413–12700
12’ (3658mm)	240413–13900
13’ (3962mm)	240413–07200 240413–07900
14’ (4267mm)	240413–07200 240413–09100
15’ (4572mm)	240413–07200 240413–10300
16’ (4877mm)	240413–07200 240413–11500
17’ (5182mm)	240413–07200 240413–12700
18’ (5486mm)	240413–07200 240413–13900
19’ (5791mm)	240413–07900 240413–14400
20’ (6096mm)	240413–09100 240413–14400
21’ (6401mm)	240413–10300 240413–14400
22’ (6706mm)	240413–11500 240413–14400
23’ (7010mm)	240413–12700 240413–14400
24’ (7315mm)	240413–13900 240413–14400

25’ (7620mm)	240413–07900 240413–07200 240413–14400
26’ (7925mm)	240413–09100 240413–07200 240413–14400
27’ (8230mm)	240413–10300 240413–07200 240413–14400
28’ (8534mm)	240413–11500 240413–07200 240413–14400
29’ (8839mm)	240413–12700 240413–07200 240413–14400
30’ (9144mm)	240413–13900 240413–07200 240413–14400

Item 14: Center Rail 12” Wide (305mm)	
Length	Part Number
2’ (610mm)	240414–01273
3’ (914mm)	240414–02473
4’ (1219mm)	240414–03673
5’ (1524mm)	240414–04873
6’ (1829mm)	240414–06073
7’ (2134mm)	240414–07273
8’ (2438mm)	240414–08473
9’ (2743mm)	240414–09673
10’ (3048mm)	240414–10873
11’ (3353mm)	240414–12073
12’ (3658mm)	240414–13273
13’ (3962mm)	240414–07200 240414–07273
14’ (4267mm)	240414–07200 240414–08473
15’ (4572mm)	240414–07200 240414–09673
16’ (4877mm)	240414–07200 240414–10873
17’ (5182mm)	240414–07200 240414–12073
18’ (5486mm)	240414–07200 240414–13273
19’ (5791mm)	240414–07273 240414–14400
20’ (6096mm)	240414–08473 240414–14400
21’ (6401mm)	240414–09673 240414–14400
22’ (6706mm)	240414–10873 240414–14400
23’ (7010mm)	240414–12073 240414–14400
24’ (7315mm)	240414–13273 240414–14400
25’ (7620mm)	240414–07273 240414–07200 240414–14400
26’ (7925mm)	240414–08473 240414–07200 240414–14400
27’ (8230mm)	240414–09673 240414–07200 240414–14400
28’ (8534mm)	240414–10873 240414–07200 240414–14400
29’ (8839mm)	240414–12073 240414–07200 240414–14400
30’ (9144mm)	240414–13273 240414–07200 240414–14400

Item 15: Bed Plate Top	
Length	Part Number
2’ (610mm)	2452WW–01892
3’ (914mm)	2452WW–03092
4’ (1219mm)	2452WW–04292
5’ (1524mm)	2452WW–05492
6’ (1829mm)	2452WW–06692
7’ (2134mm)	2452WW–07892
8’ (2438mm)	2452WW–09092
9’ (2743mm)	2452WW–10292
10’ (3048mm)	2452WW–11492
11’ (3353mm)	2452WW–12692
12’ (3658mm)	2452WW–13892
13’ (3962mm)	2452WW–07196 2452WW–07892
14’ (4267mm)	2452WW–07196 2452WW–09092
15’ (4572mm)	2452WW–07196 2452WW–10292
16’ (4877mm)	2452WW–07196 2452WW–11492
17’ (5182mm)	2452WW–07196 2452WW–12692
18’ (5486mm)	2452WW–07196 2452WW–13892
19’ (5791mm)	2452WW–07892 2452WW–14396
20’ (6096mm)	2452WW–09092 2452WW–14396
21’ (6401mm)	2452WW–10292 2452WW–14396
22’ (6706mm)	2452WW–11492 2452WW–14396
23’ (7010mm)	2452WW–12692 2452WW–14396
24’ (7315mm)	2452WW–13892 2452WW–14396
25’ (7620mm)	2452WW–07892 2452WW–07196 2452WW–14396
26’ (7925mm)	2452WW–09092 2452WW–07196 2452WW–14396
27’ (8230mm)	2452WW–10292 2452WW–07196 2452WW–14396
28’ (8534mm)	2452WW–11492 2452WW–07196 2452WW–14396
29’ (8839mm)	2452WW–12692 2452WW–07196 2452WW–14396
30’ (9144mm)	2452WW–13892 2452WW–07196 2452WW–14396
WW = Conveyor Width reference: 12	

Item 16: Bed Plate Bottom	
Length	Part Number
2’ (610mm)	2405WW–01892
3’ (914mm)	2405WW–03092
4’ (1219mm)	2405WW–04292
5’ (1524mm)	2405WW–05492
6’ (1829mm)	2405WW–06692
7’ (2134mm)	2405WW–07892
8’ (2438mm)	2405WW–09092
9’ (2743mm)	2405WW–10292
10’ (3048mm)	2405WW–11492
11’ (3353mm)	2405WW–12692
12’ (3658mm)	2405WW–13892
13’ (3962mm)	2405WW–07196 2405WW–07892
14’ (4267mm)	2405WW–07196 2405WW–09092
15’ (4572mm)	2405WW–07196 2405WW–10292
16’ (4877mm)	2405WW–07196 2405WW–11492
17’ (5182mm)	2405WW–07196 2405WW–12692
18’ (5486mm)	2405WW–07196 2405WW–13892
19’ (5791mm)	2405WW–07892 2405WW–14396
20’ (6096mm)	2405WW–09092 2405WW–14396
21’ (6401mm)	2405WW–10292 2405WW–14396
22’ (6706mm)	2405WW–11492 2405WW–14396
23’ (7010mm)	2405WW–12692 2405WW–14396
24’ (7315mm)	2405WW–13892 2405WW–14396
25’ (7620mm)	2405WW–07892 2405WW–07196 2405WW–14396
26’ (7925mm)	2405WW–09092 2405WW–07196 2405WW–14396
27’ (8230mm)	2405WW–10292 2405WW–07196 2405WW–14396
28’ (8534mm)	2405WW–11492 2405WW–07196 2405WW–14396
29’ (8839mm)	2405WW–12692 2405WW–07196 2405WW–14396
30’ (9144mm)	2405WW–13892 2405WW–07196 2405WW–14396
WW = Conveyor Width reference: 12	

18” (457mm) and 24” (610mm) Wide Conveyor Assembly

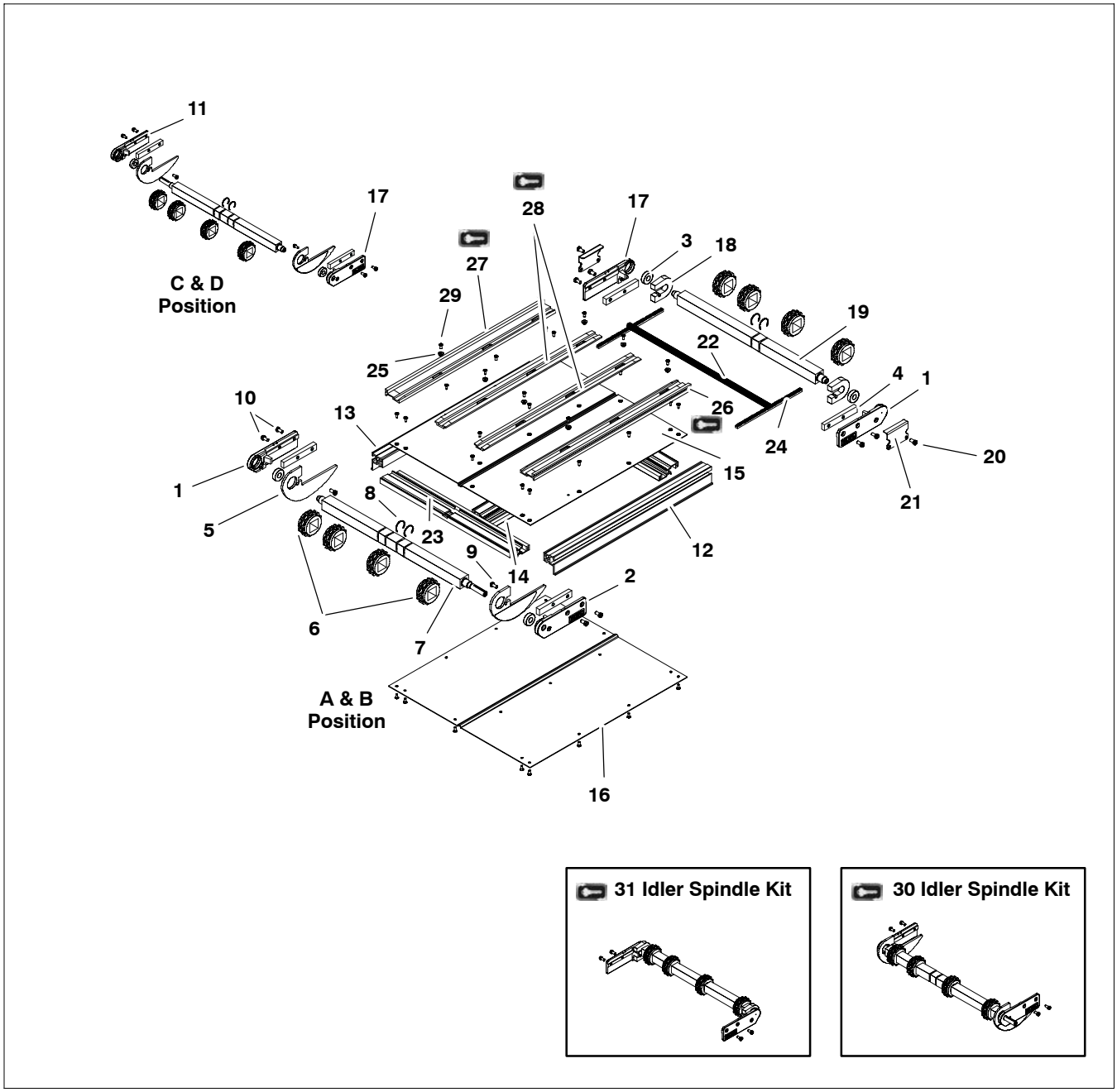

Item	Part Number	Description
1	240426	Head Plate RH
2	240427	Head Plate LH Drive Side, Position A and B
3	240328	Bearing
4	240329	Tension Slide Bar
5	245858	Sag Guard
6	245863	Sprocket
7	2475WW	Drive Spindle
8	807–1108	Retaining Ring

9	920691M	Socket Head Screw M6 x 10mm
10	920692M	Socket Head Screw M6 x 12mm
11	240428	Head Plate RH Drive Side, Position C and D
12	See Chart Below	Side Rail RH
13	See Chart Below	Side Rail LH
14	See Chart Below	Center Rail

15	See Chart Below	Bed Plate Top
16	See Chart Below	Bed Plate Bottom
17	240425	Head Plate LH
18	245850	Pinch Guard Plate
19	2474WW	Idler Spindle
20	920693M	Socket Head Screw M6 x 16mm
21	245625	Gap Guard Clip
22	2030WWM	Gear Pinion
23	240417	Center Rail Cross Support 18” (457mm)
	240419	Center Rail Cross Support 24” (610mm)
24	240420	Rack Gear 14.5 Degree PA x 24 P
25	245854	Screw Sleeve
26	245827–LLLL	LH Outer Wear Strip – UHMW
	245828–LLLL	LH Outer Wear Strip – Antistat
27	245829–LLLL	RH Outer Wear Strip – UHMW
	245830–LLLL	RH Outer Wear Strip – Antistat
28	245831–LLLL	Center Wear Strips – UHMW
	245832–LLLL	Center Wear Strips – Antistat
29	807–1105	Torx, Flat Head M4 x 10mm
30	MPBA–WW	Drive Spindle Kit, Position A and B (Includes Items 1, 2, 3, and 5 through 10)
	MPBD–WW	Drive Spindle Kit, Position C and D (Includes Items 3, 5 through 11 and 17)
31	MPBT–WW	Idler Spindle Kit (Includes Items 1, 3, 6, 8, 10, and 17 through 20)
WW = Conveyor width reference: 18, 24		

Item 12: Side Rail RH 18” and 24” Wide (457mm and 610mm)	
Length	Part Number
2’ (610mm)	240412–01900
3’ (914mm)	240412–03100
4’ (1219mm)	240412–04300
5’ (1524mm)	240412–05500
6’ (1829mm)	240412–06700
7’ (2134mm)	240412–07900
8’ (2438mm)	240412–09100
9’ (2743mm)	240412–10300
10’ (3048mm)	240412–11500
11’ (3353mm)	240412–12700
12’ (3658mm)	240412–13900
13’ (3962mm)	240412–07200 240412–07900
14’ (4267mm)	240412–07200 240412–09100
15’ (4572mm)	240412–07200 240412–10300
16’ (4877mm)	240412–07200 240412–11500
17’ (5182mm)	240412–07200 240412–12700
18’ (5486mm)	240412–07200 240412–13900
19’ (5791mm)	240412–07900 240412–13900
20’ (6096mm)	240412–09100 240412–13900
21’ (6401mm)	240412–10300 240412–13900
22’ (6706mm)	240412–11500 240412–13900
23’ (7010mm)	240412–12700 240412–13900
24’ (7315mm)	240412–13900 240412–13900
25’ (7620mm)	240412–07900 240412–07200 240412–13900
26’ (7925mm)	240412–09100 240412–07200 240412–13900
27’ (8230mm)	240412–10300 240412–07200 240412–13900
28’ (8534mm)	240412–11500 240412–07200 240412–13900
29’ (8839mm)	240412–12700 240412–07200 240412–13900
30’ (9144mm)	240412–13900 240412–07200 240412–13900

Item 13: Side Rail LH 18” and 24” Wide (457mm and 610mm)	
Length	Part Number
2’ (610mm)	240413–01900
3’ (914mm)	240413–03100
4’ (1219mm)	240413–04300
5’ (1524mm)	240413–05500
6’ (1829mm)	240413–06700
7’ (2134mm)	240413–07900
8’ (2438mm)	240413–09100
9’ (2743mm)	240413–10300
10’ (3048mm)	240413–11500
11’ (3353mm)	240413–12700
12’ (3658mm)	240413–13900
13’ (3962mm)	240413–07200 240413–07900
14’ (4267mm)	240413–07200 240413–09100
15’ (4572mm)	240413–07200 240413–10300
16’ (4877mm)	240413–07200 240413–11500
17’ (5182mm)	240413–07200 240413–12700
18’ (5486mm)	240413–07200 240413–13900
19’ (5791mm)	240413–07908 240413–13900
20’ (6096mm)	240413–09108 240413–13900
21’ (6401mm)	240413–10308 240413–13900

22’ (6706mm)	240413–11508 240413–13900
23’ (7010mm)	240413–12708 240413–13900
24’ (7315mm)	240413–13908 240413–13900
25’ (7620mm)	240413–07900 240413–07200 240413–13900
26’ (7925mm)	240413–09100 240413–07200 240413–13900
27’ (8230mm)	240413–10300 240413–07200 240413–13900
28’ (8534mm)	240413–11500 240413–07200 240413–13900
29’ (8839mm)	240413–12700 240413–07200 240413–13900
30’ (9144mm)	240413–13900 240413–07200 240413–13900

Item 14: Center Rail 18” and 24” Wide (457mm–610mm)	
Length	Part Number
2’ (610mm)	240414–00990
3’ (914mm)	240414–02190
4’ (1219mm)	240414–03390
5’ (1524mm)	240414–04490
6’ (1829mm)	240414–05790
7’ (2134mm)	240414–06990
8’ (2438mm)	240414–08190
9’ (2743mm)	240414–09390
10’ (3048mm)	240414–10590
11’ (3353mm)	240414–11790
12’ (3658mm)	240414–12990
13’ (3962mm)	240414–06700 240414–06990
14’ (4267mm)	240414–06700 240414–08190
15’ (4572mm)	240414–06700 240414–09390
16’ (4877mm)	240414–06700 240414–10590
17’ (5182mm)	240414–06700 240414–11790
18’ (5486mm)	240414–06700 240414–12990
19’ (5791mm)	240414–06990 240414–13900
20’ (6096mm)	240414–08190 240414–13900
21’ (6401mm)	240414–09390 240414–13900
22’ (6706mm)	240414–10590 240414–13900
23’ (7010mm)	240414–11790 240414–13900
24’ (7315mm)	240414–12990 240414–13900
25’ (7620mm)	240414–06990 240414–06700 240414–13900
26’ (7925mm)	240414–08190 240414–06700 240414–13900
27’ (8230mm)	240414–09390 240414–06700 240414–13900
28’ (8534mm)	240414–10590 240414–06700 240414–13900
29’ (8839mm)	240414–11790 240414–06700 240414–13900
30’ (9144mm)	240414–12990 240414–06700 240414–13900

Item 15: Bed Plate Top	
Length	Part Number
2’ (610mm)	2452WW–01892
3’ (914mm)	2452WW–03092
4’ (1219mm)	2452WW–04292
5’ (1524mm)	2452WW–05492
6’ (1829mm)	2452WW–06692
7’ (2134mm)	2452WW–07892
8’ (2438mm)	2452WW–09092
9’ (2743mm)	2452WW–10292
10’ (3048mm)	2452WW–11492
11’ (3353mm)	2452WW–12692
12’ (3658mm)	2452WW–13892
13’ (3962mm)	2452WW–07196 2452WW–07892
14’ (4267mm)	2452WW–07196 2452WW–09092
15’ (4572mm)	2452WW–07196 2452WW–10292
16’ (4877mm)	2452WW–07196 2452WW–11492
17’ (5182mm)	2452WW–07196 2452WW–12692
18’ (5486mm)	2452WW–07196 2452WW–13892
19’ (5791mm)	2452WW–07892 2452WW–14396
20’ (6096mm)	2452WW–09092 2452WW–14396
21’ (6401mm)	2452WW–10292 2452WW–14396
22’ (6706mm)	2452WW–11492 2452WW–14396
23’ (7010mm)	2452WW–12692 2452WW–14396
24’ (7315mm)	2452WW–13892 2452WW–14396
25’ (7620mm)	2452WW–07892 2452WW–07196 2452WW–14396
26’ (7925mm)	2452WW–09092 2452WW–07196 2452WW–14396
27’ (9230mm)	2452WW–10292 2452WW–07196 2452WW–14396
28’ (8534mm)	2452WW–11492 2452WW–07196 2452WW–14396
29’ (8839mm)	2452WW–12692 2452WW–07196 2452WW–14396
30’ (9144mm)	2452WW–13892 2452WW–07196 2452WW–14396
WW = Conveyor Width reference: 18, 24	

Item 16: Bed Plate Bottom	
Length	Part Number
2’ (610mm)	2405WW–01892
3’ (914mm)	2405WW–03092
4’ (1219mm)	2405WW–04292
5’ (1524mm)	2405WW–05492
6’ (1829mm)	2405WW–06692
7’ (2134mm)	2405WW–07892
8’ (2438mm)	2405WW–09092
9’ (2743mm)	2405WW–10292
10’ (3048mm)	2405WW–11492
11’ (3353mm)	2405WW–12692
12’ (3658mm)	2405WW–13892
13’ (3962mm)	2405WW–07196 2405WW–07892
14’ (4267mm)	2405WW–07196 2405WW–09092
15’ (4572mm)	2405WW–07196 2405WW–10292
16’ (4877mm)	2405WW–07196 2405WW–11492
17’ (5182mm)	2405WW–07196 2405WW–12692
18’ (5486mm)	2405WW–07196 2405WW–13892
19’ (5791mm)	2405WW–07892 2405WW–14396
20’ (6096mm)	2405WW–09092 2405WW–14396
21’ (6401mm)	2405WW–10292 2405WW–14396
22’ (6706mm)	2405WW–11492 2405WW–14396
23’ (7010mm)	2405WW–12692 2405WW–14396
24’ (7315mm)	2405WW–13892 2405WW–14396
25’ (7620mm)	2405WW–07892 2405WW–07196 2405WW–14396
26’ (7925mm)	2405WW–09092 2405WW–07196 2405WW–14396
27’ (9230mm)	2405WW–10292 2405WW–07196 2405WW–14396
28’ (8534mm)	2405WW–11492 2405WW–07196 2405WW–14396
29’ (8839mm)	2405WW–12692 2405WW–07196 2405WW–14396
30’ (9144mm)	2405WW–13892 2405WW–07196 2405WW–14396
WW = Conveyor Width reference: 18, 24	

Return Wear Strip Assembly – 2’ (610mm) and 3’ (914mm) Long

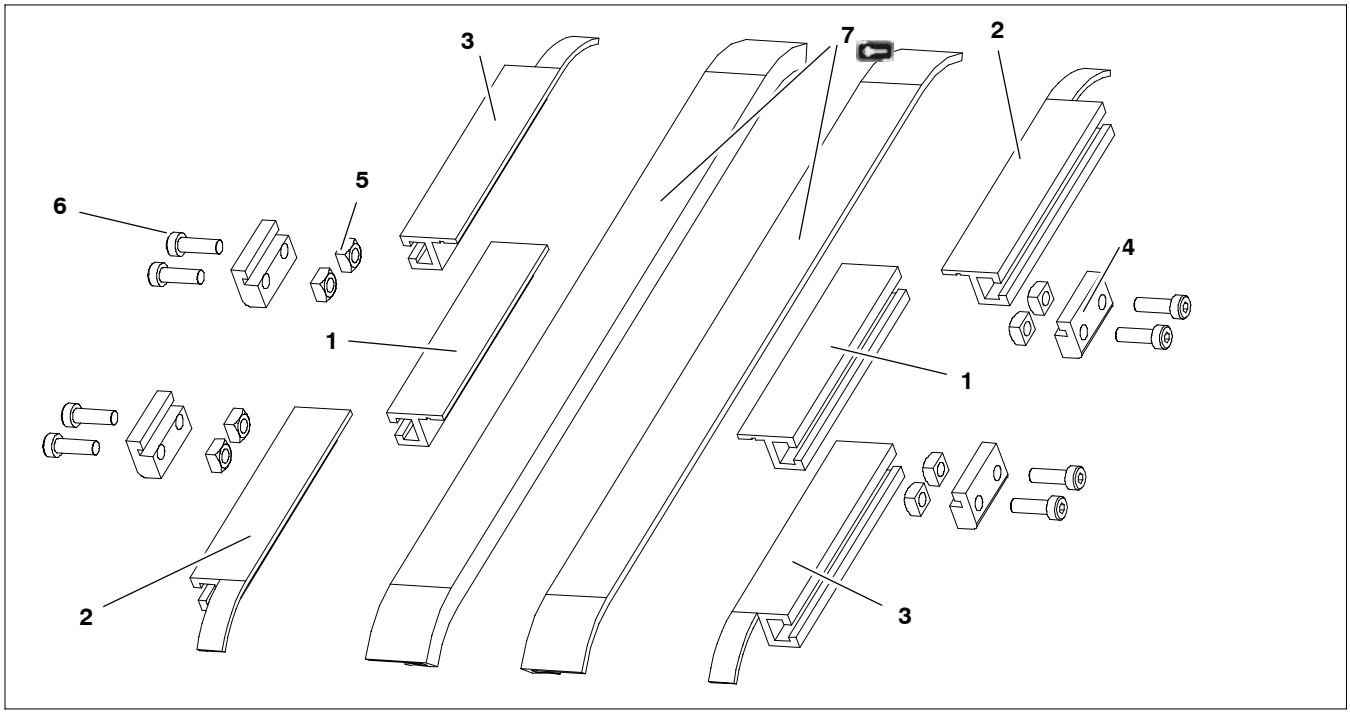

Item	Part Number	Description
1	246075–00425	2’ (610mm) Return Support Extrusion
	246075–01625	3’ (914mm) Return Support Extrusion
2	246078	LH Lead–in Return Support
3	246079	RH Lead–in Return Support
4	246080	MPB Return Connector Clip
5	807–920	M6 Square Nut
6	920693M	Scr, Cap Low Head M6 1.0x16mm
7	246082–LLLLL	Bottom Wear Strip – UHMW
	246083–LLLLL	Bottom Wear Strip – Antistat
LLLLL = Wearstrip Length Reference		

Return Wear Strip Assembly – 4’ (1219mm) to 30’ (9144mm) Length

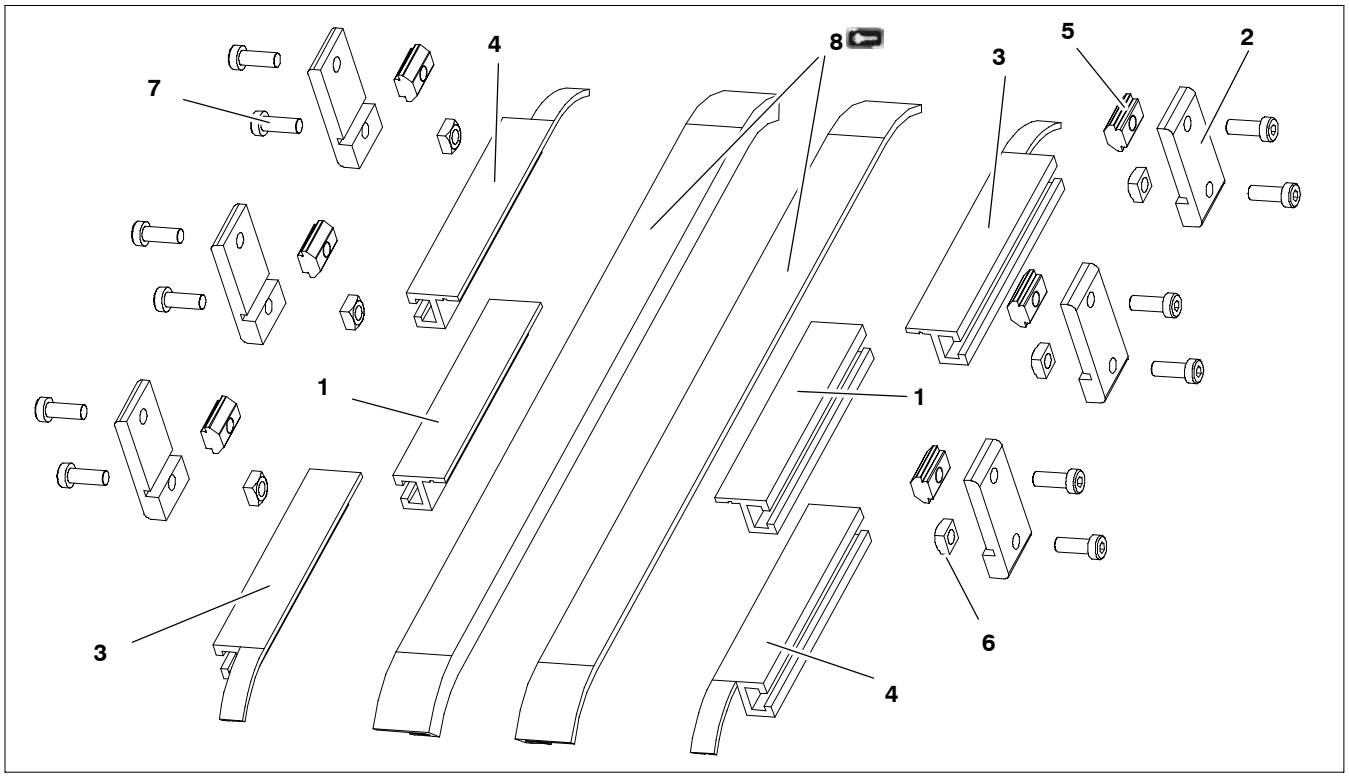

Item	Part Number	Description
1	See Chart Below	Return Support Extrusion
2	246076	MPB Return Clip
3	246078	LH Lead–in Return Support
4	246079	RH Lead–in Return Support
5	639971M	M6 Drop In Tee Bar
6	807–920	M6 Square Nut
7	920693M	Scr, Cap Low Head M6 1.0x16mm
8	246082–LLLLL	Bottom Wear Strip – UHMW
	246083–LLLLL	Bottom Wear Strip – Antistat
LLLLL = Wearstrip Length Reference		

Item 1: MPB Return Support Extrusion	
Length	Part Number
4’ (1219mm)	246075–02825
5’ (1524mm)	246075–04025
6’ (1829mm)	246075–05225
7’ (2134mm)	246075–06425
8’ (2438mm)	246075–07625
9’ (2743mm)	246075–08825
10’ (3048mm)	246075–10025
11’ (3353mm)	246075–11225
12’ (3658mm)	246075–12425
13’ (3962mm)	246075–07387; 246075–0519
14’ (4267mm)	246075–08587; 246075–0519
15’ (4572mm)	246075–09787; 246075–0519
16’ (4877mm)	246075–10987; 246075–0519
17’ (5182mm)	246075–12187; 246075–0519
18’ (5486mm)	246075–13387; 246075–0519
19’ (5791mm)	246075–07387; 246075–1119
20’ (6096mm)	246075–08587; 246075–1119
21’ (6401mm)	246075–09787; 246075–1119
22’ (6706mm)	246075–10987; 246075–1119
23’ (7011mm)	246075–12187; 246075–1119
24’ (7315mm)	246075–13387; 246075–1119
25’ (7620mm)	246075–07387; 246075–0519; 246075–1200
26’ (7925mm)	246075–08587; 246075–0519; 246075–1201
27’ (8230mm)	246075–09787; 246075–0519; 246075–1202
28’ (8534mm)	246075–10987; 246075–0519; 246075–1203
29’ (8839mm)	246075–12187; 246075–0519; 246075–1204
30’ (9144mm)	246075–13387; 246075–0519; 246075–1205

–04 2.3” (60mm) Aluminum Side

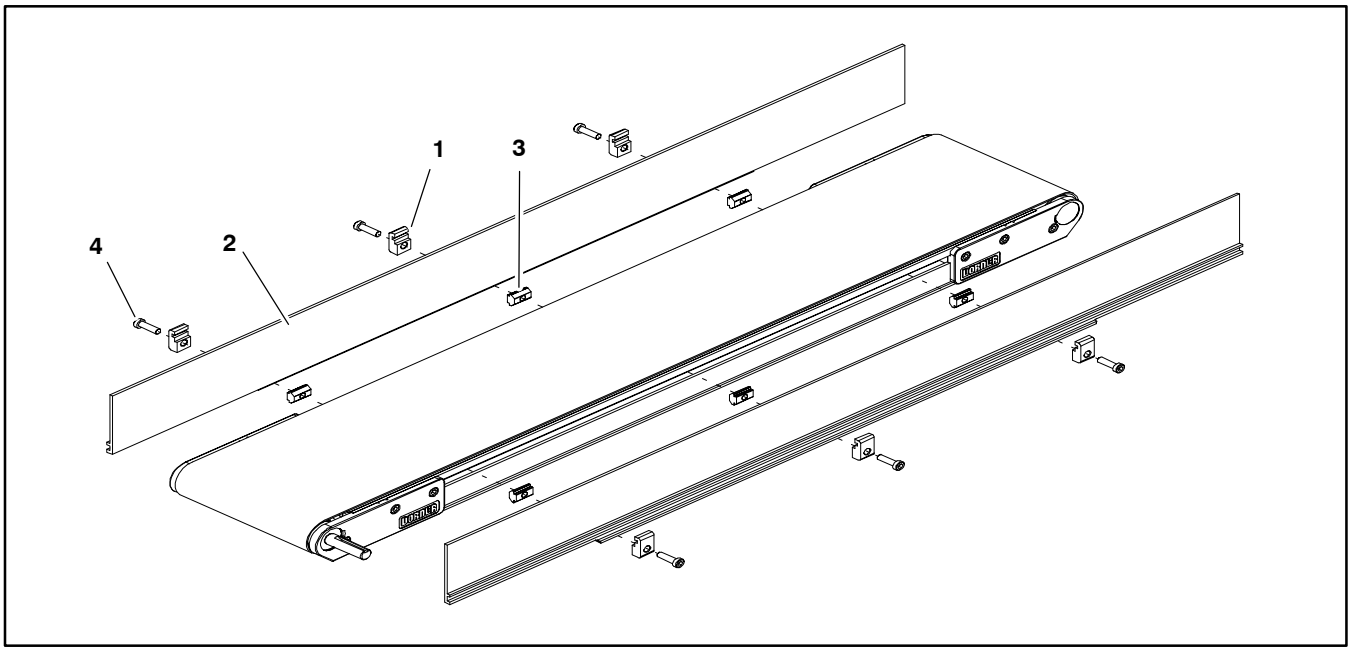

Item	Part Number	Description
1	200121	Guide Retaining Clip
2	See Chart Below	MPB Guide 2.3” (60mm) HS
3	639971M	Single Drop–in Tee Bar
4	920694M	Socket Head Screw M6 x 20mm

Item 2: MPB Guide 2.3”(60mm) HS 2’(610mm) to 24’(7315mm)			
Length		End Guide	End Guide
2’ (610mm)	Left Hand	280403–02400	N/A
	Right Hand	280403–02400	N/A
3’ (914mm)	Left Hand	280403–03600	N/A
	Right Hand	280403–03600	N/A
4’ (1219mm)	Left Hand	280403–04800	N/A
	Right Hand	280403–04800	N/A
5’ (1524mm)	Left Hand	280403–06000	N/A
	Right Hand	280403–06000	N/A
6’ (1829mm)	Left Hand	280403–07200	N/A
	Right Hand	280403–07200	N/A
7’ (2134mm)	Left Hand	280403–08400	N/A
	Right Hand	280403–08400	N/A
8’ (2438mm)	Left Hand	280403–09600	N/A
	Right Hand	280403–09600	N/A
9’ (2743mm)	Left Hand	280403–10800	N/A
	Right Hand	280403–10800	N/A
10’ (3048mm)	Left Hand	280403–12000	N/A
	Right Hand	280403–12000	N/A
11’ (3353mm)	Left Hand	280403–13200	N/A
	Right Hand	280403–13200	N/A
12’ (3658mm)	Left Hand	280403–14400	N/A
	Right Hand	280403–14400	N/A
13’ (3962mm)	Left Hand	280401–07500	280401–08100
	Right Hand	280402–07500	280402–08100
14’ (4267mm)	Left Hand	280401–07500	280401–09300
	Right Hand	280402–07500	280402–09300
15’ (4572mm)	Left hand	280401–07500	280401–10500
	Right Hand	280402–07500	280402–10500
16’ (4877mm)	Left Hand	280401–07500	280401–11700
	Right Hand	280402–07500	280402–11700
17’ (5182mm)	Left Hand	280401–07500	280401–12900
	Right Hand	280402–07500	280402–12900
18’ (5486mm)	Left Hand	280401–07500	280401–14100
	Right Hand	280402–07500	280402–14100
19’ (5791mm)	Left Hand	280401–14700	280401–08100
	Right Hand	280402–14700	280402–08100
20’ (6096mm)	Left Hand	280401–14700	280401–09300
	Right Hand	280402–14700	280402–09300
21’ (6401mm)	Left hand	280401–14700	280401–10500
	Right Hand	280402–14700	280402–10500
22’ (6706mm)	Left Hand	280401–14700	280401–11700
	Right Hand	280402–14700	280402–11700
23’ (7010mm)	Left Hand	280401–14700	280401–12900
	Right Hand	280402–14700	280402–12900
24’ (7315mm)	Left Hand	280401–14700	280401–14100
	Right Hand	280402–14700	280402–14100

Item 2: MPB Guide 2.3” (60mm) HS 25’ (7620mm) to 30’ (9144mm)				
Length		End Guide	End Guide	Center
25’ (7620mm)	Left Hand	280401−07500	280401−08100	200601P−14400
	Right Hand	280402−07500	280402−08100	200601P−14400
26’ (7925mm)	Left Hand	280401−07500	280401−09300	200601P−14400
	Right Hand	280402−07500	280402−09300	200601P−14400
27’ (8230mm)	Left Hand	280401−07500	280401−10500	200601P−14400
	Right Hand	280402−07500	280402−10500	200601P−14400
28’ (8534mm)	Left Hand	280401−07500	280401−11700	200601P−14400
	Right Hand	280402−07500	280402−11700	200601P−14400
29’ (8839mm)	Left Hand	280401−07500	280401−12900	200601P−14400
	Right Hand	280402−07500	280402−12900	200601P−14400
30’ (9144mm)	Left Hand	280401−07500	280401−14100	200601P−14400
	Right Hand	280402−07500	280402−14100	200601P−14400

−05 1.5” (38mm) Aluminum Side

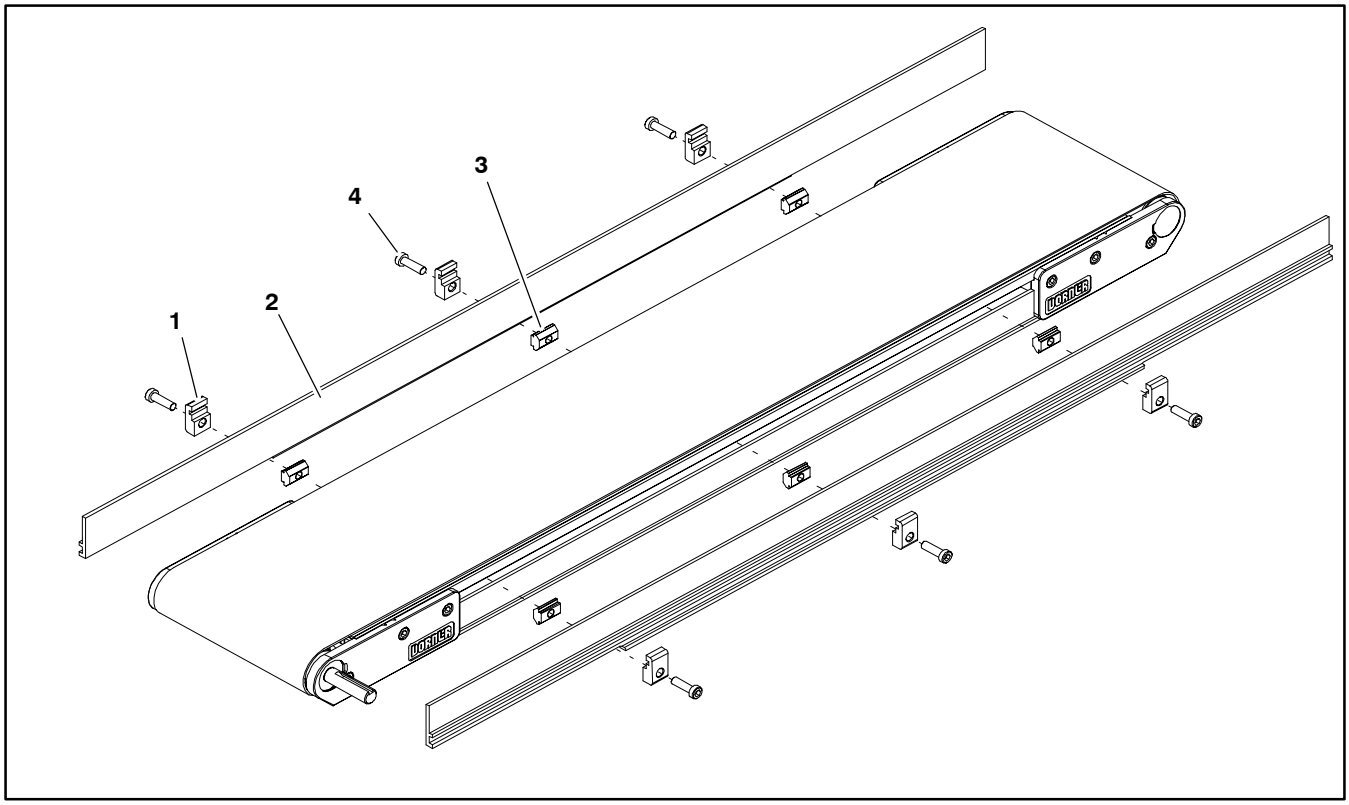

Item	Part Number	Description
1	200121	Guide Retaining Clip
2	See Chart Below	MPB Guide .5” (13mm) HS
3	639971M	Single Drop−in Tee Bar
4	920694M	Socket Head Screw M6 x 20mm

Item 2: 2200 Guide .5” (13mm) HS			
Length		End Guide	End Guide
2’ (610mm)	Left Hand	280503–02400	N/A
	Right Hand	280503–02400	N/A
3’ (914mm)	Left Hand	280503–03600	N/A
	Right Hand	280503–03600	N/A
4’ (1219mm)	Left Hand	280503–04800	N/A
	Right Hand	280503–04800	N/A
5’ (1524mm)	Left Hand	280503–06000	N/A
	Right Hand	280503–06000	N/A
6’ (1829mm)	Left Hand	280503–07200	N/A
	Right Hand	280503–07200	N/A
7’ (2134mm)	Left Hand	280503–08400	N/A
	Right Hand	280503–08400	N/A
8’ (2438mm)	Left Hand	280503–09600	N/A
	Right Hand	280503–09600	N/A
9’ (2743mm)	Left Hand	280503–10800	N/A
	Right Hand	280503–10800	N/A
10’ (3048mm)	Left Hand	280503–12000	N/A
	Right Hand	280503–12000	N/A
11’ (3353mm)	Left Hand	280503–13200	N/A
	Right Hand	280503–13200	N/A
12’ (3658mm)	Left Hand	280503–14400	N/A
	Right Hand	280503–14400	N/A

13’ (3962mm)	Left Hand	280501–07500	280501–08100
	Right Hand	280502–07500	280502–08100
14’ (4267mm)	Left Hand	280501–07500	280501–09300
	Right Hand	280502–07500	280502–09300
15’ (4572mm)	Left hand	280501–07500	280501–10500
	Right Hand	280502–07500	280502–10500
16’ (4877mm)	Left Hand	280501–07500	280501–11700
	Right Hand	280502–07500	280502–11700
17’ (5182mm)	Left Hand	280501–07500	280501–12900
	Right Hand	280502–07500	280502–12900
18’ (5486mm)	Left Hand	280501–07500	280501–14100
	Right Hand	280502–07500	280502–14100
19’ (mm)	Left Hand	280501–14700	280501–08100
	Right Hand	280502–14700	280502–08100
20’ (mm)	Left Hand	280501–14700	280501–09300
	Right Hand	280502–14700	280502–09300
21’ (mm)	Left hand	280501–14700	280501–10500
	Right Hand	280502–14700	280502–10500
22’ (mm)	Left Hand	280501–14700	280501–11700
	Right Hand	280502–14700	280502–11700
23’ (mm)	Left Hand	280501–14700	280501–12900
	Right Hand	280502–14700	280502–12900
24’ (mm)	Left Hand	280501–14700	280501–14100
	Right Hand	280502–14700	280502–14100

Item 2: MPB Guide .5” (13mm) HS 25’ (7620mm) to 30’ (9144mm)				
Length		End Guide	End Guide	Center
25’ (7620mm)	Left Hand	280501–07500	280501–08100	200750P–14400
	Right Hand	280502–07500	280502–08100	200750P–14400
26’ (7925mm)	Left Hand	280501–07500	280501–09300	200750P–14400
	Right Hand	280502–07500	280502–09300	200750P–14400
27’ (8230mm)	Left Hand	280501–07500	280501–10500	200750P–14400
	Right Hand	280502–07500	280502–10500	200750P–14400
28’ (8534mm)	Left Hand	280501–07500	280501–11700	200750P–14400
	Right Hand	280502–07500	280502–11700	200750P–14400
29’ (8839mm)	Left Hand	280501–07500	280501–12900	200750P–14400
	Right Hand	280502–07500	280502–12900	200750P–14400
30’ (9144mm)	Left Hand	280501–07500	280501–14100	200750P–14400
	Right Hand	280502–07500	280502–14100	200750P–14400

–13 Adjustable Guiding

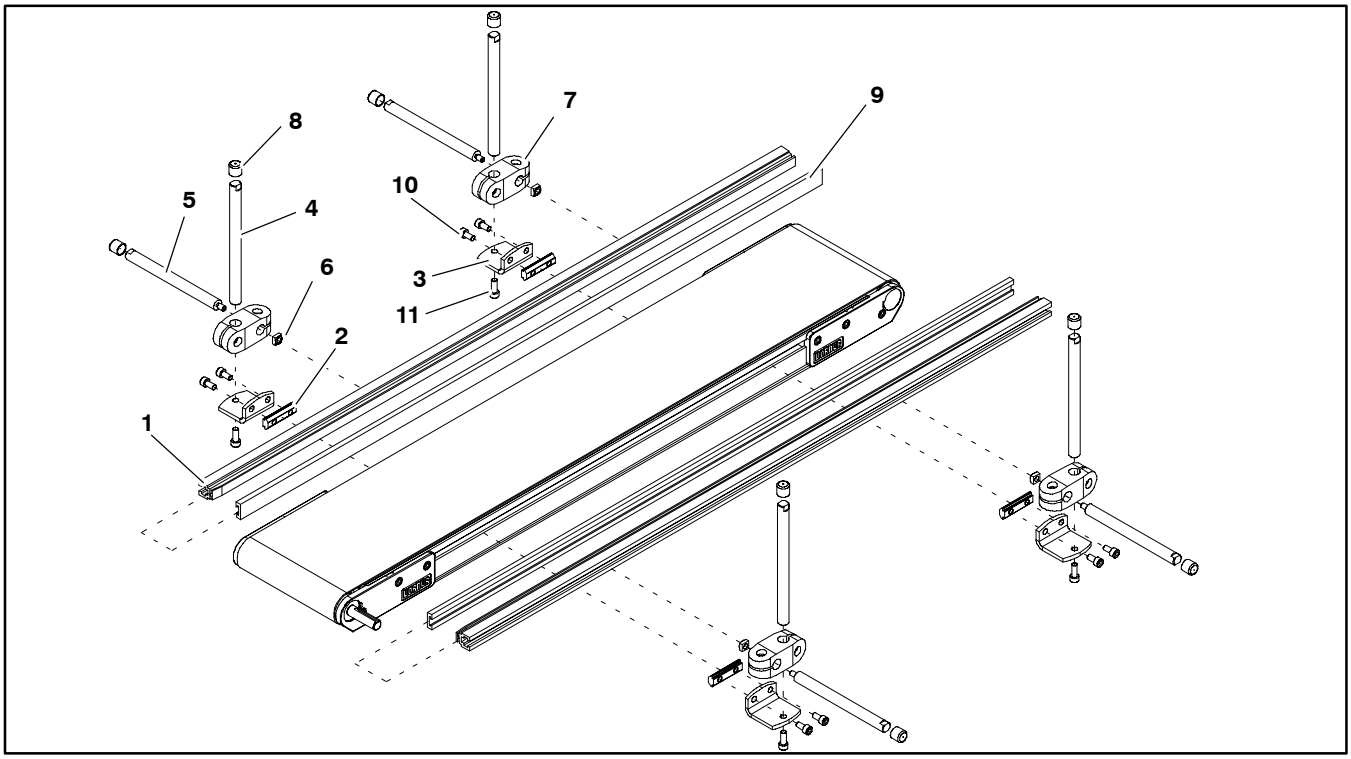

Item	Part Number	Description
1	See Chart Below	Aluminum Profile Guide
2	200830M	Drop–In Tee Bar
3	202004	Mounting Bracket
4	202027M	Guide Mounting Shaft Vertical
5	202028M	Guide Mounting Shaft Horizontal
6	674175MP	Square Nut
7	807–652	Cross Block
8	807–948	Vinyl Shaft Cap
9	614068P	Flat Extruded Guide (per foot)
10	920612M	Socket Head Screw M6 x 12mm
11	920616M	Socket Head Screw M6 x 16mm

Item 2: MPB Aluminum Profile Guide			
Length	End Guide	Middle Guide	End Guide
2’ (610mm)	202983	N/A	N/A
3’ (914mm)	202984	N/A	N/A
4’ (1219mm)	202985	N/A	N/A
5’ (1524mm)	202986	N/A	N/A
6’ (1829mm)	202987	N/A	N/A
7’ (2134mm)	202988	N/A	N/A
8’ (2438mm)	202989	N/A	N/A
9’ (2743mm)	202990	N/A	N/A
10’ (3048mm)	202991	N/A	N/A
11’ (3353mm)	202992	N/A	N/A
12’ (3658mm)	202993	N/A	N/A
13’ (3962mm)	202988	202987	N/A
14’ (4267mm)	202989	202987	N/A
15’ (4572mm)	202990	202987	N/A
16’ (4877mm)	202991	202987	N/A
17’ (5182mm)	202992	202987	N/A
18’ (5486mm)	202993	202987	N/A
19’ (5791mm)	202988	202993	N/A
20’ (6096mm)	202989	202993	N/A
21’ (6401mm)	202990	202993	N/A
22’ (6706mm)	202991	202993	N/A
23’ (7010mm)	202992	202993	N/A
24’ (7315mm)	202993	202993	N/A
25’ (7620mm)	202988	202993	202987
26’ (7925mm)	202989	202993	202987
27’ (8230mm)	202990	202993	202987
28’ (8534mm)	202991	202993	202987
29’ (8839mm)	202992	202993	202987
30’ (9144mm)	202993	202993	202987

2” (51mm) Cleated Guiding

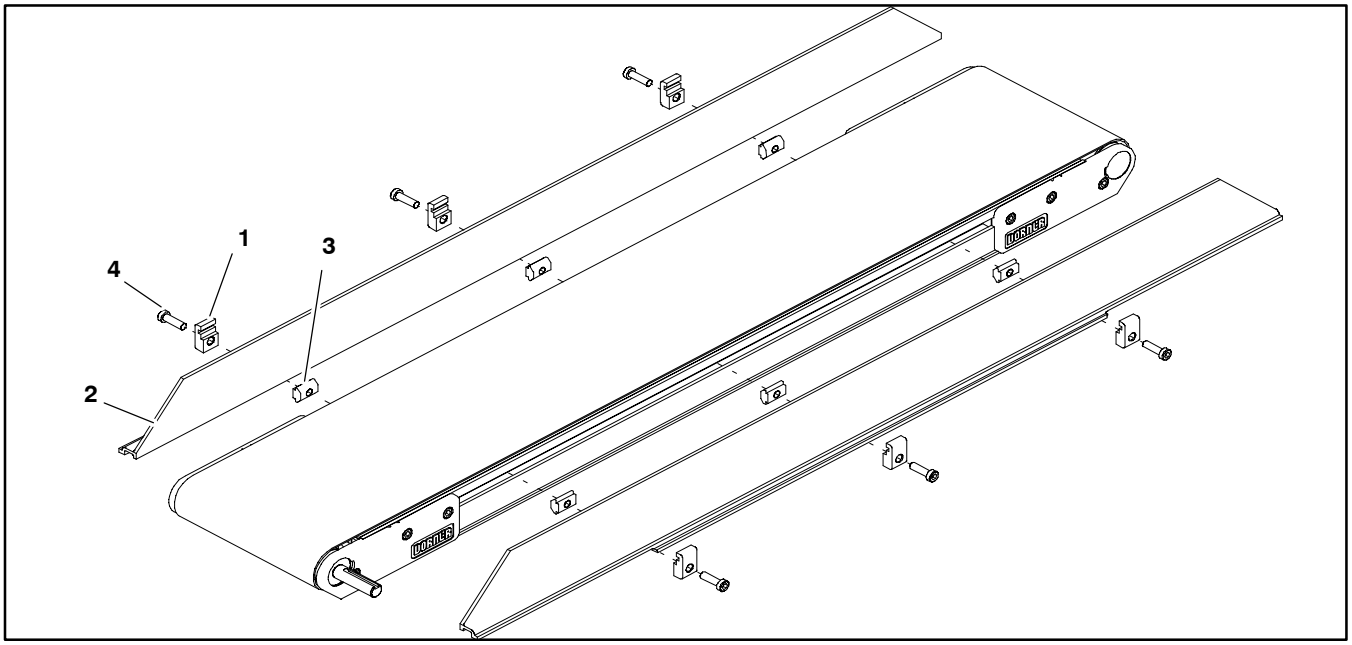

Item	Part Number	Description
1	200121	Guide Retaining Clip
2	See Chart Below	2200 Guide 2.3” Cleated
3	639971M	Drop–In Tee Bar
4	920694M	Socket Head Screw M6 x 20mm

Item 2: MPB Cleated Guide			
Length	End Guide	Middle Guide	End Guide
2’ (610mm)	246051–01070	N/A	246052–01070
3’ (914mm)	246051–01670	N/A	246052–01670
4’ (1219mm)	246051–02270	N/A	246052–02270
5’ (1524mm)	246051–02870	N/A	246052–02870
6’ (1829mm)	246051–03470	N/A	246052–03470
7’ (2134mm)	246051–04070	N/A	246052–04070
8’ (2438mm)	246051	N/A	246052
9’ (2743mm)	246051–03513	246050–03513	246052–03513
10’ (3048mm)	246051–03913	246050–03913	246052–03913
11’ (3353mm)	246051	246050–03600	246052
12’ (3658mm)	246051	246050–04800	246052
13’ (3962mm)	246051	246050–03300 246050–02700	246052
14’ (4267mm)	246051	246050–04500 246050–02700	246052
15’ (4572mm)	246051	246050–05700 246050–02700	246052
16’ (4877mm)	246051	246050–06900 246050–02700	246052
17’ (5182mm)	246051	246050–08100 246050–02700	246052
18’ (5486mm)	246051	246050–09300 246050–02700	246052
19’ (5791mm)	246051	246050–03300 246050–09900	246052
20’ (6096mm)	246051	246050–04500 246050–09900	246052
21’ (6401mm)	246051	246050–05700 246050–09900	246052
22’ (6706mm)	246051	246050–06900 246050–09900	246052
23’ (7010mm)	246051	246050–08100 246050–09900	246052
24’ (7315mm)	246051	246050–09300 246050–09900	246052
25’ (7620mm)	246051	246050–09300 246050–09900 246050–02700	246052
26’ (7925mm)	246051	246050–03300 246050–14400 246050–02700	246052
27’ (8230mm)	246051	246050–04500 246050–14400 246050–02700	246052
28’ (8534mm)	246051	246050–05700 246050–14400 246050–02700	246052
29’ (8839mm)	246051	246050–06900 246050–14400 246050–02700	246052
30’ (9144mm)	246051	246050–08100 246050–14400 246050–02700	246052

Flat Belt Mounting Brackets

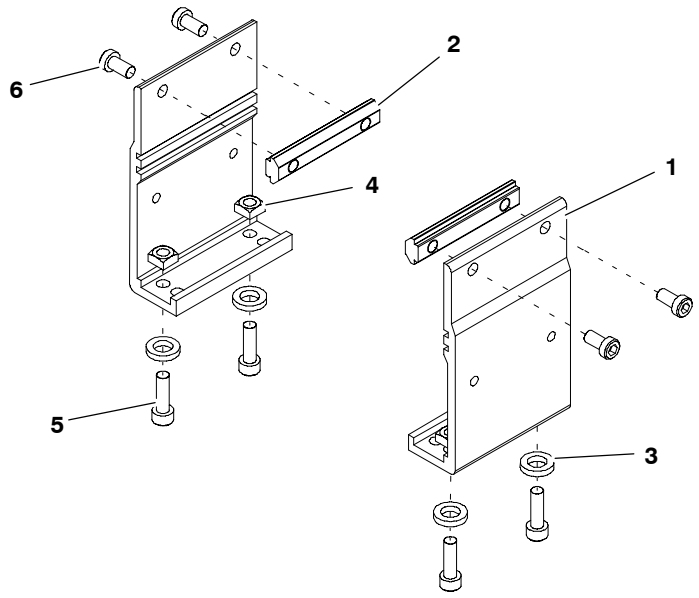

Item	Part Number	Description
1	240831	Stand Mount
2	300150M	Drop–In Tee Bar
3	605279P	Washer
4	807–920	Square Nut M6 5mm x 10mm
5	920620M	Socket Head Screw M6 x 20mm
6	920692M	Socket Head Screw M6 x 12mm

Cleated Belt Mounting Brackets

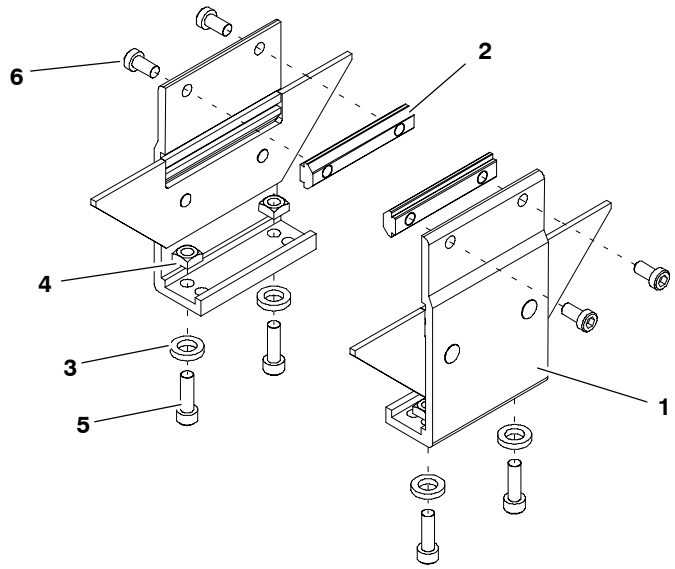

Item	Part Number	Description
1	240836	Cleated Mounting Assembly
2	300150M	Drop–In Tee Bar
3	605279P	Washer
4	807–920	Square Nut M6 5mm x 10mm
5	920620M	Socket Head Screw M6 x 20mm
6	920692M	Socket Head Screw M6 x 12mm

Flat Belt Mounting Brackets for 2’ (610mm) Conveyors

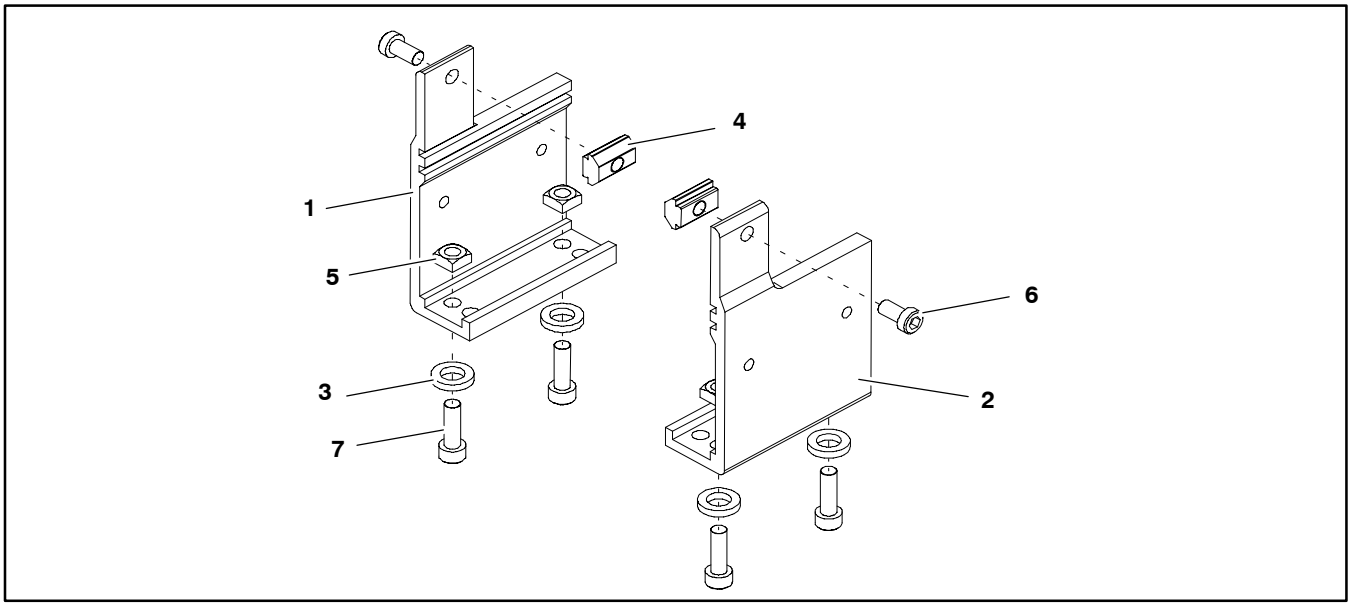

Item	Part Number	Description
1	240833	Stand Mount, LH 2’ (610mm)
2	240834	Stand Mount, RH 2’ (610mm)
3	605279P	Washer
4	639971M	Drop–In Tee Bar
5	807–920	Square Nut M6 5mm x 10mm
6	920620M	Socket Head Screw M6 x 20mm
7	920692M	Socket Head Screw M6 x 12mm

Cleated Belt Mounting Brackets for 2’ (610mm) Conveyors

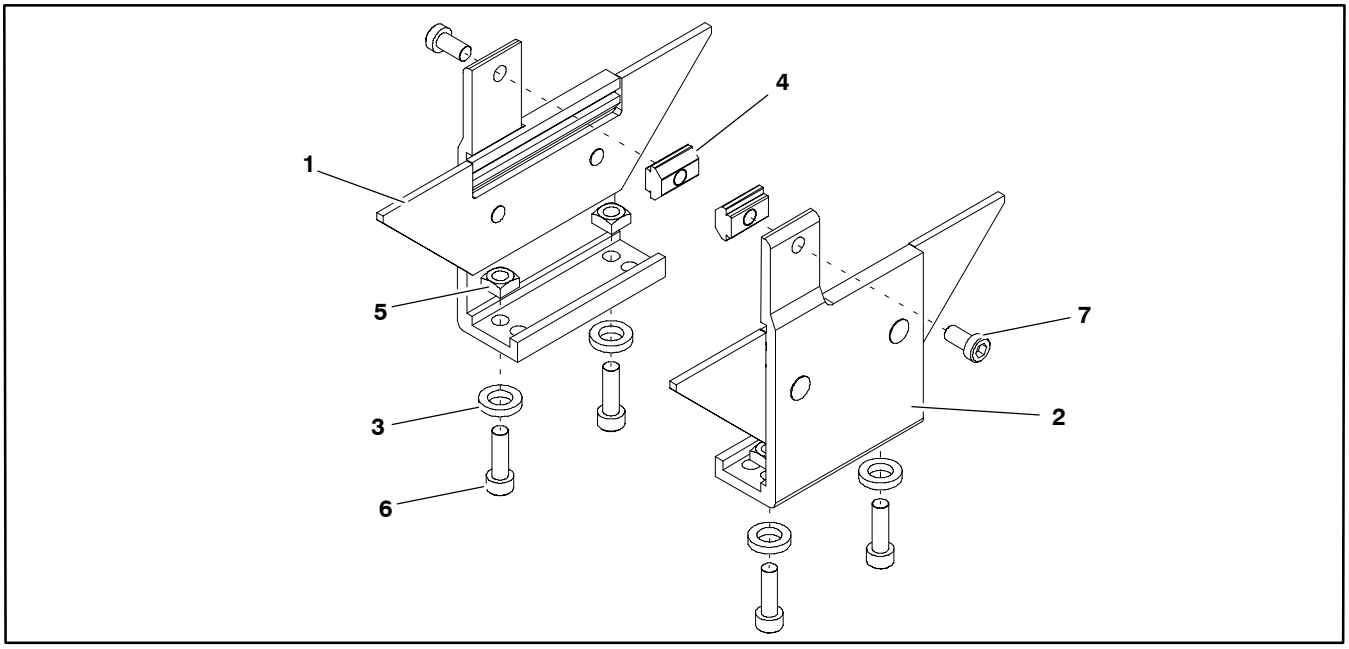

Item	Part Number	Description
1	240852	Cleated Stand Bracket Assembly LH 2’ (610mm) Conveyor
2	240853	Cleated Stand Bracket Assembly RH 2’ (610mm) Conveyor
3	605279P	Washer
4	639971M	Drop–In Tee Bar
5	807–920	Square Nut M6 5mm x 10mm
6	920620M	Socket Head Screw M6 x 20mm
7	920692M	Socket Head Screw M6 x 12mm

Connecting Assembly without Stand Mount

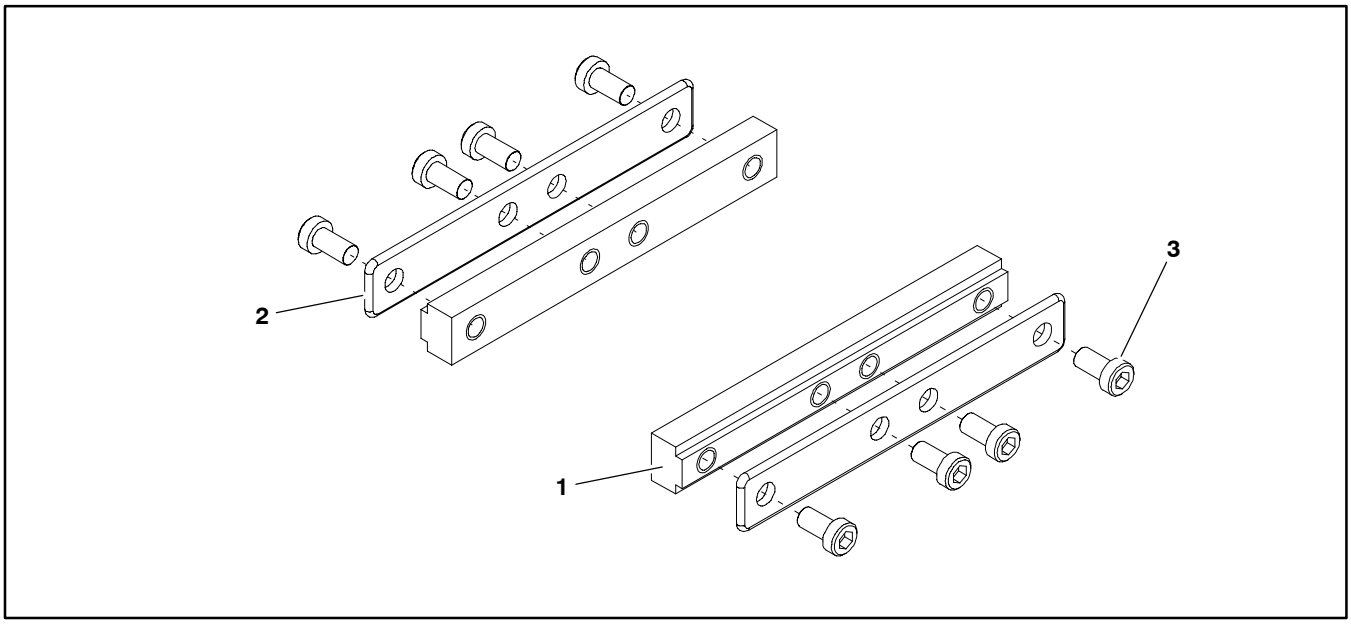

Item	Part Number	Description
1	240331	Frame Bar Connector
2	300153M	Intermediate Clamp Plate
3	920692M	Socket Head Screw M6 x 12mm

Flat Belt Connecting Assembly with Stand Mount

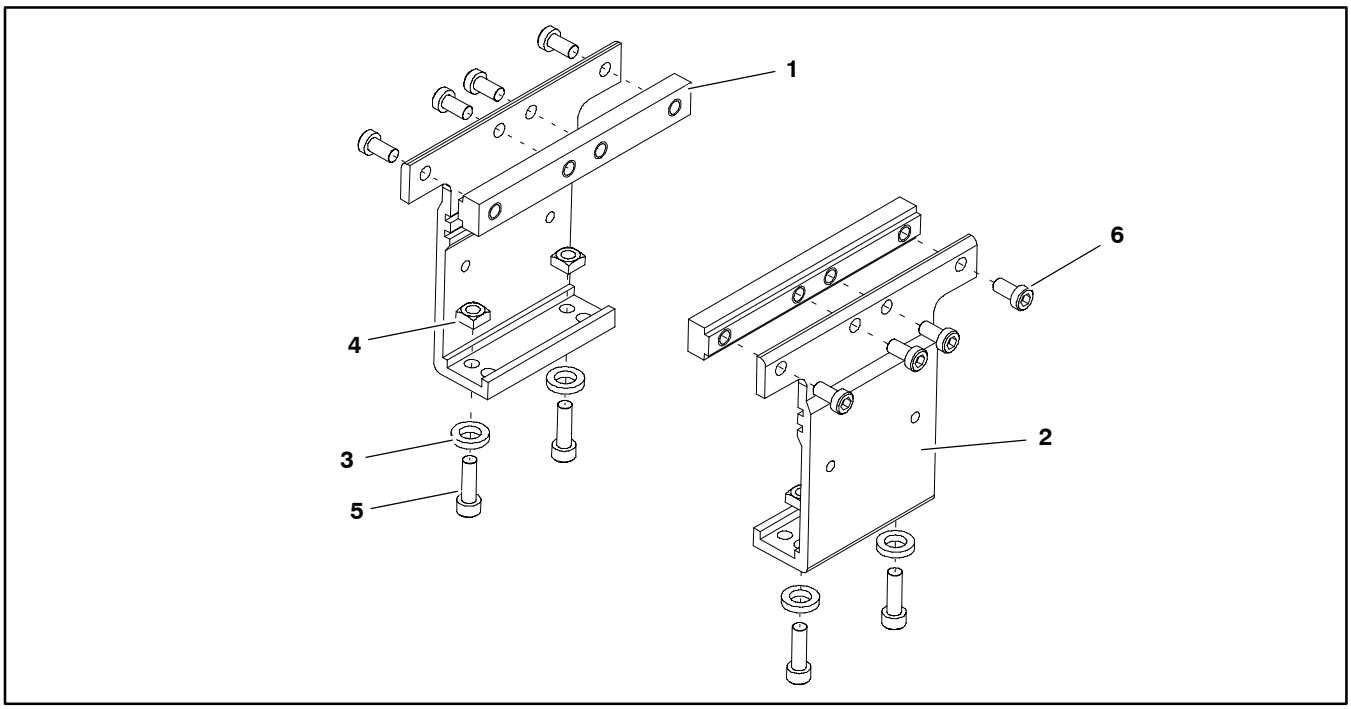

Item	Part Number	Description
1	240331	Frame Connector Bar
2	240837	Stand Mount Joint
3	605279P	Washer
4	807–920	Square Nut M6 5mm x 10mm
5	920620M	Socket Head Screw M6 x 20mm
6	920692M	Socket Head Screw M6 x 12mm

Cleated Belt Connecting Assembly with Stand Mount

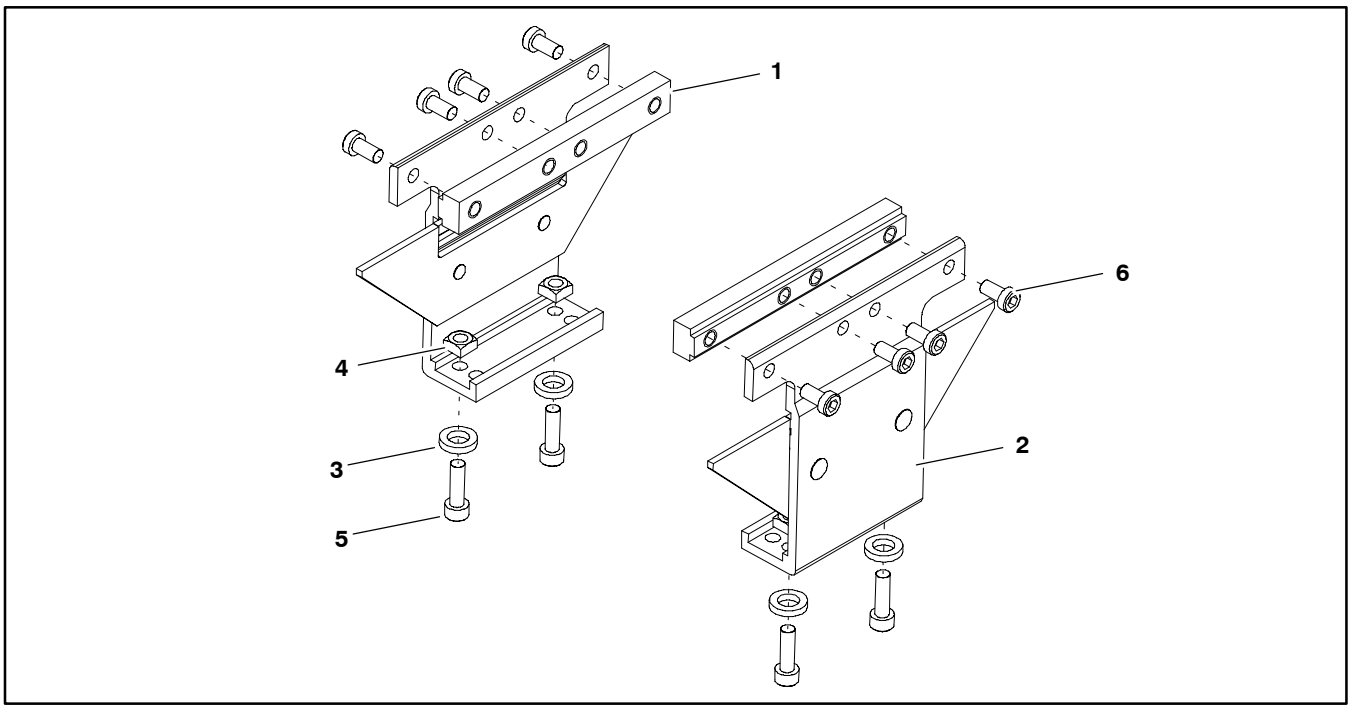

Item	Part Number	Description
1	240331	Frame Connector Bar
2	240846	Cleat Stand Bracket Assembly
3	605279P	Washer
4	807–920	Square Nut M6 5mm x 10mm
5	920620M	Socket Head Screw M6 x 20mm
6	920692M	Socket Head Screw M6 x 12mm

Conveyor Belting

A – Complete Conveyor Belt

Flat Belt Conveyor Model Number **2P0 M WW LLLL A PP BB**

Cleated Belt Conveyor Model Number **2P2 C M WW LLLL A BB SS**

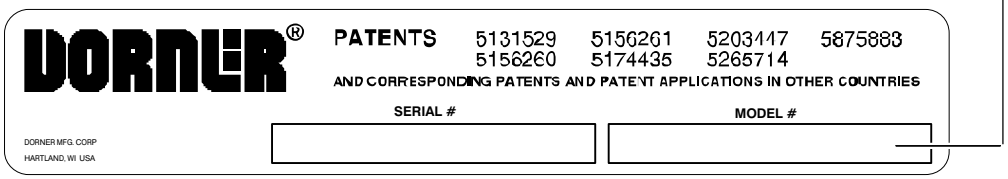

Figure 51

Flat Belt Part Number Configuration

Refer to Dorner patent plate (Figure 51). From the model number, determine conveyor width ("WW"), length ("LLLL") and belt type ("BB"). Use data to configure belt part number as indicated below.

2P - WW LLLL / BB

2P–____ (Fill In) ____/_____

Cleated Belt Part Number Configuration

Refer to Dorner patent plate (Figure 51). From the model number, determine conveyor width ("WW"), length ("LLLL"), belt type ("BB") and cleat spacing ("SS"). Use data to configure belt part number as indicated below.

2P - WW LLLL / BB SS

2P–____ (Fill In) ____/_____ _____

B – Belting Per Foot (305mm)

Flat Belts

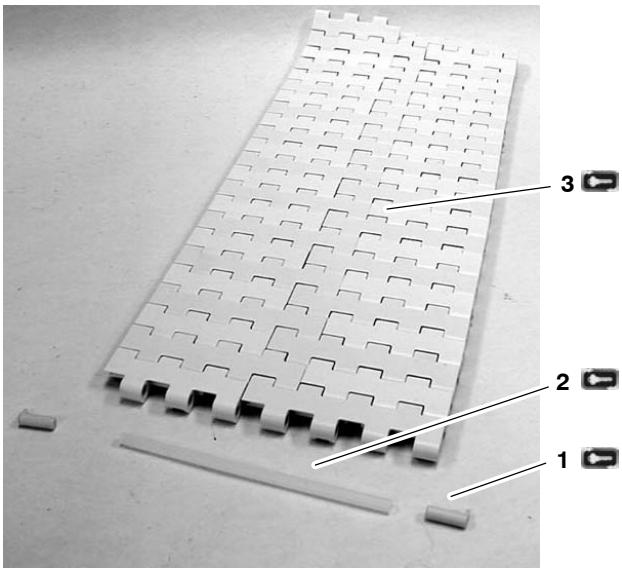

Item	Part Number	Description
1	807–1118	Retaining Pin
2	807–1113	4" Belt Rod
	807–1114	6" Belt Rod
	807–1115	12" Belt Rod
	807–1116	18" Belt Rod
	807–1119	24" Belt Rod
3	2P – WW/BB	Belting per 1ft (305mm) WW=Width: 04,06,12,18,24; BB=Belt Type (See Table Below)

Belt Type BB =	
30	Accumulation, Open Mesh
31	Chemical Resistant, Open Mesh
32	Heat Resistant, Open Mesh
33	ESD, Open Mesh (Class II Charges)
40	Accumulation, Closed Mesh
41	Chemical Resistant, Closed Mesh
42	Heat Resistant, Closed Mesh
43	ESD, Closed Mesh (Class II Charges)

Service Parts

Cleated Belts

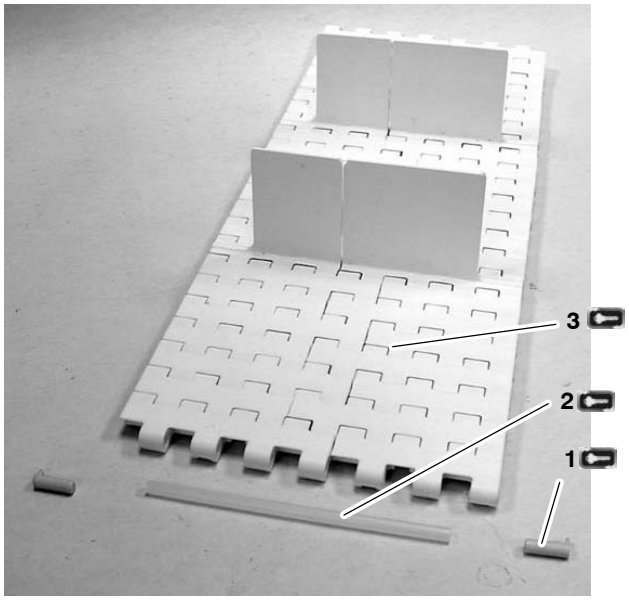

Item	Part Number	Description
1	807–1118	Retaining Pin
2	807–1113	4” Belt Rod
	807–1114	6” Belt Rod
	807–1115	12” Belt Rod
	807–1116	18” Belt Rod
	807–1119	24” Belt Rod
3	2P – WW/BBSS	Belting per 1ft (305mm) WW=Width: 04,06,12,18,24; BB=Belt Type (See Table Below); SS=Cleat Spacing (Links)

Belt Type BB =	
34	General Purpose, Open Mesh
35	Chemical Resistant, Open Mesh
36	Heat Resistant, Open Mesh
44	General Purpose, Closed Mesh
45	Chemical Resistant, Closed Mesh
46	Heat Resistant, Closed Mesh

Sidewall Cleated Belts

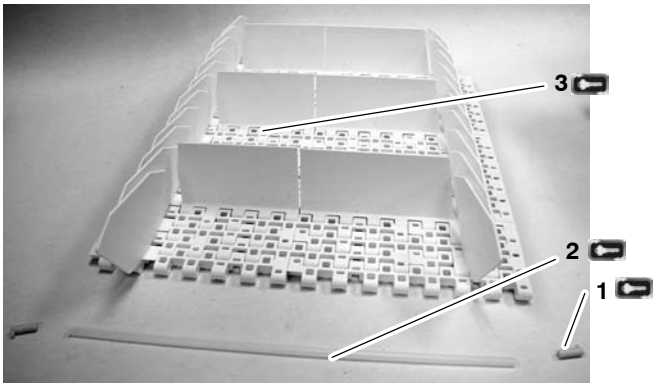

Item	Part Number	Description
1	807–1118	Retaining Pin
2	807–1113	4” Belt Rod
	807–1114	6” Belt Rod
	807–1115	12” Belt Rod
	807–1116	18” Belt Rod
	807–1119	24” Belt Rod
3	2P – WW/BBSS	Belting per 1ft (305mm) WW=Width: 12,18,24; BB=Belt Type (See Table Below) SS=Cleat Spacing (links)

Belt Type BB =	
37	General Purpose, Open Mesh
38	Chemical Resistant, Open Mesh
47	General Purpose, Closed Mesh
48	Chemical Resistant, Closed Mesh

Notes

Return Policy

Returns must have prior written factory authorization or they will not be accepted. Items that are returned to Dorner without authorization will not be credited nor returned to the original sender. When calling for authorization, please have the following information ready for the Dorner factory representative or your local distributor:

1. Name and address of customer.
2. Dorner part number(s) of Item(s) being returned.
3. Reason for return.
4. Customer's original order number used when ordering the item(s).
5. Dorner or distributor invoice number.

A representative will discuss action to be taken on the returned items and provide a Returned Goods Authorization number for reference.

There will be a return charge on all new undamaged items returned for credit where Dorner was not at fault. Dorner is not responsible for return freight on such items.

Conveyors and conveyor accessories

Standard catalog conveyors	30%
MPB Series, cleated and specialty belt conveyors	50%
7400 & 7600 Series conveyors	non–returnable items
Engineered special products	case by case
Drives and accessories	30%
Sanitary stand supports	non–returnable items

Parts

Standard stock parts	30%
MPB, cleated and specialty belts	non–returnable items

Returns will not be accepted after 60 days from original invoice date.

The return charge covers inspection, cleaning, disassembly, disposal and reissuing of components to inventory.

If a replacement is needed prior to evaluation of returned item, a purchase order must be issued. Credit (if any) is issued only after return and evaluation is complete.

Dorner has representatives throughout the world. Contact Dorner for the name of your local representative. Our Technical Sales, Catalog Sales and Service Teams will gladly help with your questions on Dorner products.

For a copy of Dorner's Warranty, contact factory, distributor, service center or visit our website at www.dorner.com.

For replacement parts, contact an authorized Dorner Service Center or the factory.

DORNER®

Dorner Mfg. Corp. reserves the right to change or discontinue products without notice. All products and services are covered in accordance with our standard warranty. All rights reserved. ©Dorner Mfg. Corp. 2000

DORNER MFG. CORP.
975 Cottonwood Drive, PO Box 20
Hartland, WI 53029-0020 USA
USA
TEL 1-800-397-8664 (USA)
FAX 1-800-369-2440 (USA)
Internet: www.dorner.com

Outside the USA:
TEL 1-262-367-7600
FAX 1-262-367-5827

851-492 Rev. F

Printed in U.S.A.