Installation, Maintenance & Parts Manual

2200 Series Center Drive Conveyors

Table of Contents

Warnings – General Safety 2
Introduction 2
Product Description 3
Specifications 3
Installation 4
Required Tools 4
Recommended Installation Sequence 5
Conveyors Up to 3962 mm 5
Conveyors Longer Than 3962 mm 5
Mounting Brackets 6
Return Rollers 7
Preventive Maintenance & Adjustment 8
Required Tools 8
Standard Tools 8
Special Tools 8
Checklist 8
Lubrication 8
Conveyor Pulley Bearings 8
Drive Module Idler Pulley Bearings 8
Drive Module Drive Pulley Bearings 8
Return Rollers 8
Maintaining Conveyor Belt 8
Troubleshooting 8
Cleaning 8
Conveyor Belt Replacement 9
Conveyor Belt Replacement Sequence 9
Belt Removal for Conveyor Without Stands or Gearmotor Mounting Package 9
Belt Removal for Conveyor With Stands and Gearmotor Mounting Package 10
Gearmotor Mounting Package Removal 11
Drive Module Removal 12
Belt Removal from Drive Module 12
Conveyor Belt Installation 13
Conveyor Tension End Adjustment 14
Conveyor Belt Tensioning 15
Conveyor Belt Tracking 16
Pulley Removal 16
Conveyor End Pulley Removal 16
Drive Module Drive Pulley Removal 17
Drive Module Idler Pulley Removal 18
Bearing Replacement for Conveyor Pulley 18
Bearing Replacement for Drive Pulley 19
Bearing Removal 19
Bearing Installation 19
Bearing Replacement for Idler Pulleys 19
Pulley Replacement 19
Conveyor End Pulley 19
Drive Module Drive Pulley 21
Drive Module Idler Pulley 21
Nose Bar Bearing Replacement 21
Service Parts 23
51mm Conveyor Assembly 23
76mm to 152mm Conveyor Assembly 25
203mm to 605mm Conveyor Assembly 26
457mm to 610mm Conveyor Assembly 28
127mm to 610mm Wide Center Drive Module 30
51mm, 76mm, 102mm Wide Center Drive Module 30
Nosebar End Assembly 51mm to 610mm 32
–04 76mm Aluminum Side 33
–05 38mm Aluminum Side 34
–07 Low to Side Wiper 35
–09 Low to High Side 36
–10 13mm Extruded Plastic 37
–13 Adjustable Guiding 38
Flared Side Guiding 39
Flat Belt Mounting Brackets 40
Flat Belt Mounting Brackets for 610mm Conveyors 40
Connecting Assembly without Stand Mount 41
Flat Belt Connecting Assembly without Stand Mount 41
51mm to 152mm Flat Belt Return Roller 42
51mm to 152mm Flat Belt Return Roller 42
Return Policy 44

CE

851–458 Rev. F

Warnings – General Safety

WARNING

The safety alert symbol, black triangle with white exclamation, is used to alert you to potential personal injury hazards.

DANGER

Climbing, sitting, walking or riding on conveyor will cause severe injury.

KEEP OFF CONVEYORS.

DANGER

DO NOT OPERATE CONVEYORS IN AN EXPLOSIVE ENVIRONMENT.

WARNING

Exposed moving parts can cause severe injury.

LOCK OUT POWER before removing guards or performing maintenance.

WARNING

Gearmotors may be HOT.

DO NOT TOUCH Gearmotors.

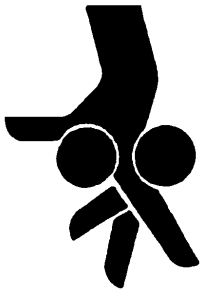

WARNING

Dorner cannot control the physical installation and application of conveyors. Taking protective measures is the responsibility of the user.

When conveyors are used in conjunction with other equipment or as part of a multiple conveyor system, CHECK FOR POTENTIAL PINCH POINTS and other mechanical hazards before system start-up.

WARNING

Loosening stand height or angle adjustment screws may cause conveyor sections to drop down, causing severe injury.

SUPPORT CONVEYOR SECTIONS PRIOR TO LOOSENING STAND HEIGHT OR ANGLE ADJUSTMENT SCREWS.

Introduction

IMPORTANT: Some illustrations may show guards removed. DO NOT operate equipment without guards.

Upon receipt of shipment:

- Compare shipment with packing slip. Contact factory regarding discrepancies.
- Inspect packages for shipping damage. Contact carrier regarding damage.
- Accessories may be shipped loose. See accessory instructions for installation.

Dorner's Limited Warranty applies.

Dorner 2200 Series conveyors are covered by Patent Numbers 5,174,435, 5,131,529, 6,298,981 and corresponding patents and patent applications in other countries.

Dorner reserves the right to make changes at any time without notice or obligation.

Product Description

Refer to Figure 1 for typical conveyor components.

Typical Components	
A	Conveyor
B	Drive Module
C	Guiding & Accessories
D	Gearmotor Mounting Package
E	Gearmotor
F	Mounting Brackets
G	Support Stand
H	Variable Speed Controller
I	Fixed End
J	Tension End

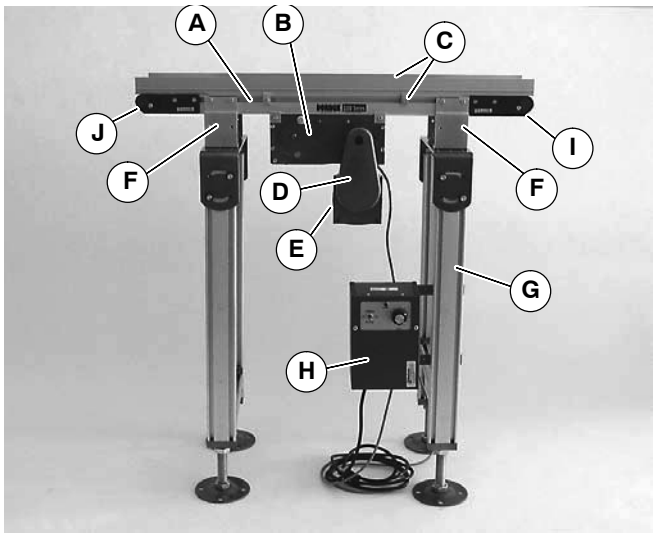

Figure 1

Specifications

Models:

2200 Series Center Drive Conveyor

2 1 5 M WW LLLL A PP BB

- **BB** — Belt Type*
- **PP** — Conveyor Profile*
- **A** — Mount Position (A or D)*
- **LLLL** — Conveyor Length Reference
- **WW** — Conveyor Width Reference
- **M** — Documentation Language: M=English
- **1** — Tail Type*

*** See Ordering and Specifications Catalog for details.**

Conveyor Supports:

Maximum Distances:

K = 457 mm

L = 1829 mm**

** **For conveyors longer than 3962 mm, install support at joint.**

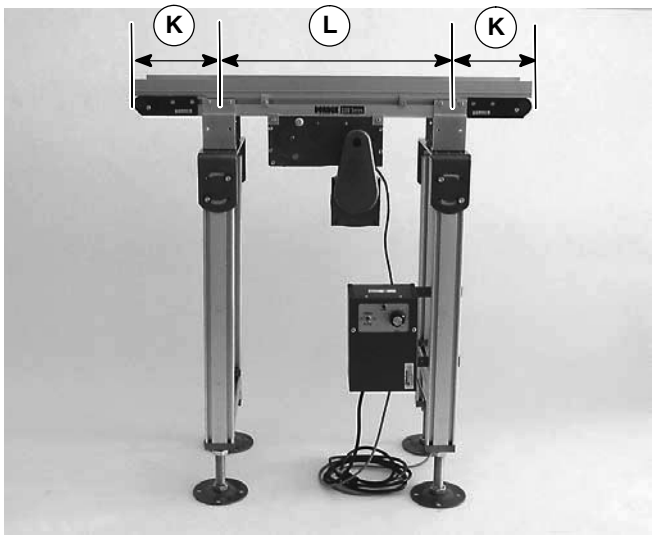

Figure 2

Specifications

Specifications:

Conveyor Width Reference (WW)	02	03	04	05	06	08	10	12	18	21	24
Conveyor Belt Width	44 mm	70 mm	95 mm	127 mm	152 mm	203 mm	254 mm	305 mm	457 mm	533 mm	610 mm
Maximum Conveyor Load* (See NOTE Below)	18 kg	23 kg	27 kg	34 kg	41 kg	47 kg	54 kg	54 kg	54 kg	54 kg	54 kg
Conveyor Start-up Torque*	1.0 Nm	1.1 Nm	1.2 Nm	1.4 Nm	1.7 Nm	2.3 Nm	2.6 Nm	3.4 Nm	3.4 Nm	4.0 Nm	4.0 Nm
Belt Travel	107 mm per revolution of pulley										
Maximum Belt Speed*	72 meters/minute										
Belt Take-up	25 mm of stroke = 51 mm of belt take-up										

Conveyor Length Reference (LL)	02	03	04	05	06	07	08	09	10	11	12	13	24	14	15	16	17	18	19	20	21	22	23
Conveyor Length	610 mm	914 mm	1219 mm	1524 mm	1829 mm	2134 mm	2438 mm	2743 mm	3048 mm	3353 mm	3658 mm	3962 mm	7315 mm	4267 mm	4572 mm	4877 mm	5182 mm	5486 mm	5791 mm	6096 mm	6401 mm	6706 mm	7010 mm

NOTE: Maximum conveyor loads based on:

- **Non-accumulating product**
- **Product moving towards gearmotor**
- **Conveyor being mounted horizontal**

*** See Ordering and Specifications Catalog for details.**

Installation

NOTE: Conveyor MUST be mounted straight, flat and level within confines of conveyor. Use a level (M of Figure 3) for setup.

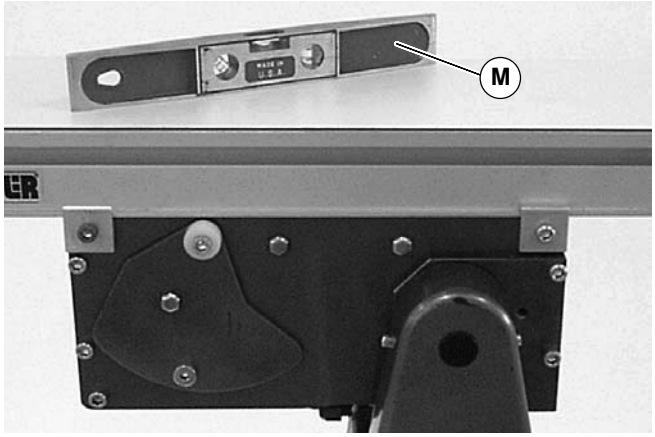

Figure 3

Installation Component List

O Conveyor fram (two sections if longer than 305 mm)
P Conveyor brackets (4x)
Q Return rollers (for longer conveyors)

Required Tools

- Hex key wrenches:
  4 mm, 5 mm
- Level
- Torque wrench

Recommended Installation Sequence

- Install stands (see accessory instructions)
- Assemble conveyor (if required)
- Attach mounting brackets to conveyor
- Attach conveyor to stands
- Install return rollers on conveyor (optional)
- Mount gearmotor mounting package (see accessory instructions)
- Attach guides/accessories (see “Service Parts” section, pages 33 to 39)

Conveyors Up to 3962 mm

No assembly is required. Install mounting brackets and return rollers. Refer to “Mounting Brackets”, page 6 and “Return Rollers”, page 7.

Conveyors Longer Than 3962 mm

1. Locate conveyor sections (O Figure 4)

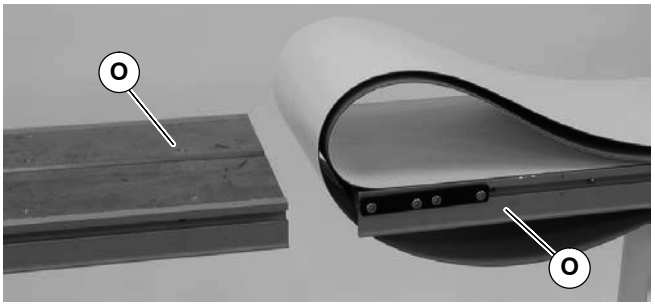

Figure 4

2. On tension end of the conveyor, identified with a label (R of Figure 5), push in head plate assembly (S): On both sides of conveyor, loosen and move cam tracking assemblies (T) (if equipped) away from head plates, then loosen fastening screws (U) and push head plate assembly inward.

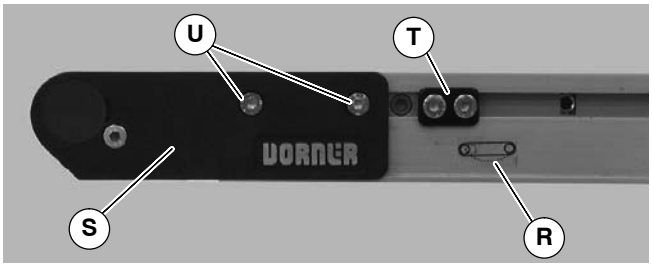

Figure 5

3. Roll out conveyor belt and place conveyor frame sections (O of Figure 6) into belt loop.

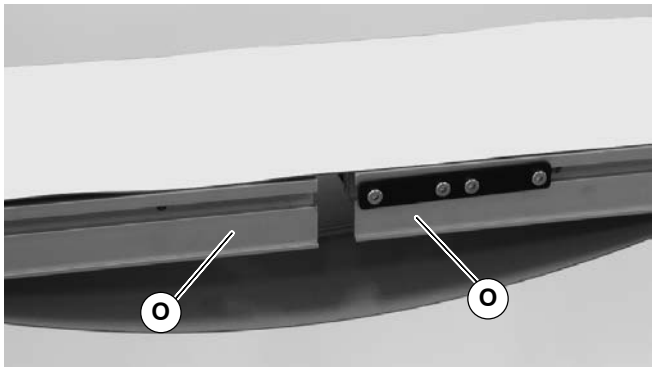

Figure 6

4. Join conveyor sections and install connector brackets (V of Figure 7) or connector/mount brackets (VA) and screws (W) on both sides as indicated. Tighten screws to 7 Nm.

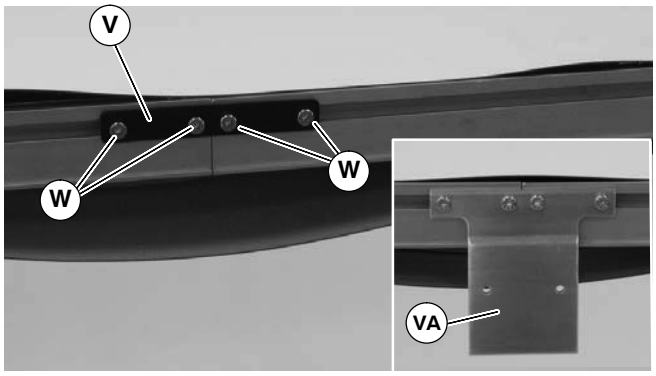

Figure 7

5. With a 5 mm hex-key wrench, rotate pinion gear (X of Figure 8) to tension the conveyor belt. Tighten fastening screws (U) on both sides of conveyor to 7 Nm. For proper tensioning, refer to “Conveyor Tension End Adjustment”, page 14.

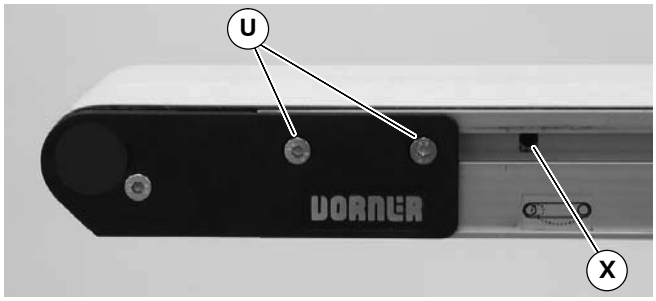

Figure 8

6. Install mounting brackets and return rollers. Refer to “Mounting Brackets”, page 6 and “Return Rollers”, page 7.
7. If equipped with cam tracking assemblies (T of Figure 5), adjust belt tracking. Refer to “Conveyor Belt Tracking”, page 16.

Mounting Brackets

1. Locate brackets. Exploded views shown in Figures 9.

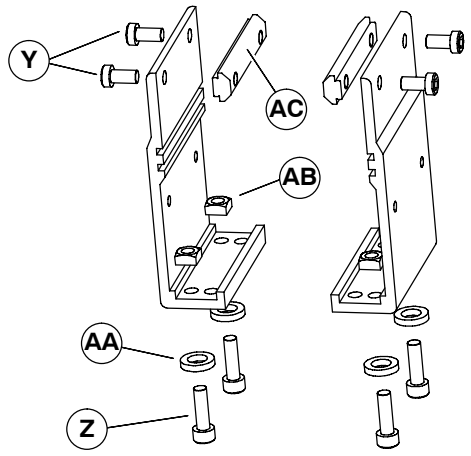

Mounting Brackets for Flat Belt Conveyor

Figure 9

2. Remove screws (Y & Z of Figures 9), washers (AA), nuts (AB) and T-bars (AC) from brackets.

3. Insert T-bars (AC of Figures 9) into conveyor side slots (AD of Figure 10). Fasten brackets (P of Figure 10) to conveyor with mounting screws (Y).

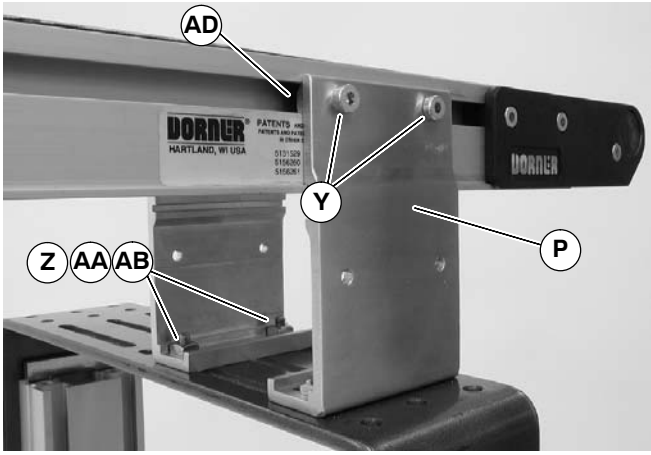

Figure 10

4. Fasten brackets to support stand with mounting screws (Z of Figure 10), washers (AA) and nuts (AB).

5. Tighten screws (Y & Z of Figure 10) to 7 Nm.

Return Rollers

51–152 mm Wide Flat Belt Conveyors

1. Locate return rollers. Exploded views shown in Figures 11.

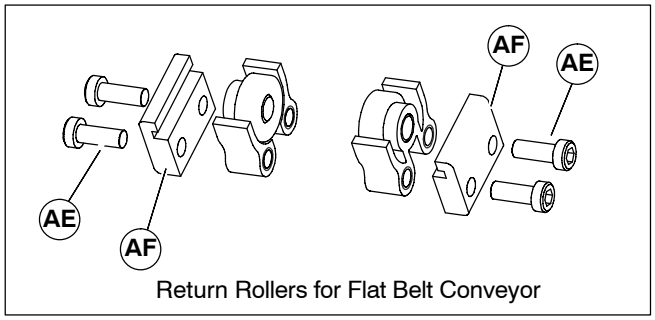

Figure 11

2. Remove screws (AE of Figures 11) and clips (AF) from roller assembly.
3. Install roller assemblies (Q of Figure 12) as shown. Tighten screws (AE) to 7 Nm.

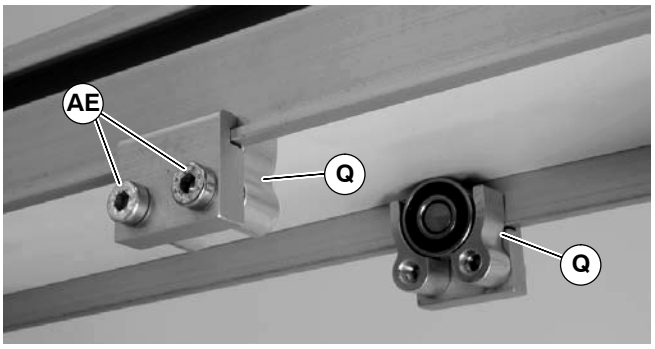

Figure 12

203–610 mm Wide Flat Belt Conveyors

1. Locate return rollers. Exploded view shown in Figure 13.

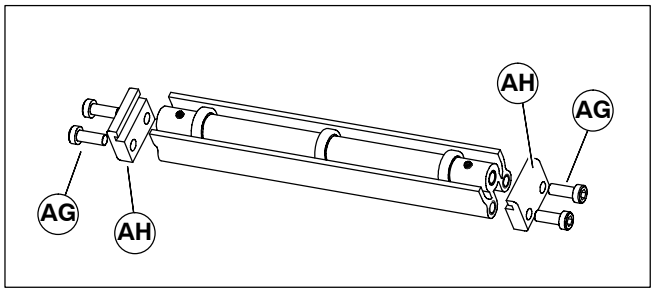

Figure 13

2. Remove screws (AG of Figure 13) and clips (AH) from roller assembly.
3. Install roller assembly as shown (Q of Figure 14). Tighten screws (AG) to 7 Nm.

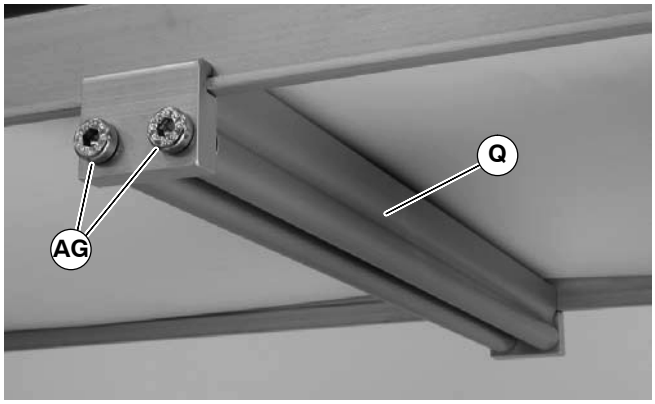

Figure 14

Preventive Maintenance and Adjustment

Required Tools

Standard Tools

- Hex key wrenches:

– 2 mm	– 2.5 mm	– 3 mm
– 4 mm	– 5 mm	– 6 mm

- Small flat blade screwdriver
- Adjustable wrench
- Arbor press

Special Tools

- 450282, Sealed Bearing Installation Tool

Checklist

- Keep service parts on hand. See “Service Parts” for recommendations.
- Keep supply of belt cleaner (part number 625619)
- Clean entire conveyor and knurled pulley while disassembled
- Replace worn or damaged parts

Lubrication

WARNING

Exposed moving parts can cause severe injury.

LOCK OUT POWER before removing guards or performing maintenance.

Conveyor Pulley Bearings

No lubrication is required. Replace pulley if worn.

Drive Module Idler Pulley Bearings

No lubrication is required. Replace pulley if worn.

Drive Module Drive Pulley Bearings

No lubrication is required. Replace bearings if worn.

Return Rollers

No lubrication is required. Replace bearings if worn.

Maintaining Conveyor Belt

Troubleshooting

Inspect conveyor belt for:

- Surface cuts or wear
- Stalling or slipping

Surface cuts and wear indicate:

- Sharp or heavy parts impacting belt
- Jammed parts
- Improperly installed bottom wiper
- Accumulated dirt in wiper
- Foreign material inside the conveyor
- Improperly positioned accessories
- Bolt-on guiding is pinching belt

Stalling or slipping indicates:

- Excessive load on belt
- Conveyor belt or drive timing belt are not properly tensioned
- Worn knurl or impacted dirt on drive pulley
- Intermittent jamming or drive train problems

NOTE: Visit www.dorner.com for complete list of troubleshooting solutions.

Cleaning

IMPORTANT: Do not use belt cleaners that contain alcohol, acetone, Methyl Ethyl Ketone (MEK) or other harsh chemicals.

Use Dorner Belt Cleaner (part number 625619). Mild soap and water may also be used. Do not soak the belt.

For /05 woven polyester and /06 black anti-static belts, use a bristled brush to improve cleaning.

Conveyor Belt Replacement

WARNING

Exposed moving parts can cause severe injury.

LOCK OUT POWER before removing guards or performing maintenance.

Conveyor Belt Replacement Sequence

NOTE: See Table of Contents for beginning page numbers of following procedures.

- Remove old conveyor belt:

  Conveyor without Stands or Gearmotor Mounting Package

  Conveyor with Stands and Gearmotor Mounting Package
- Drive Module Removal
- Conveyor Belt Removal from Drive Module
- Install New Conveyor Belt
- Tension Conveyor Belt

Belt Removal for Conveyor Without Stands or Gearmotor Mounting Package

1. If equipped, remove bottom wipers (AI of Figure 15): Remove fastening screws (AJ) then remove wiper (AI).

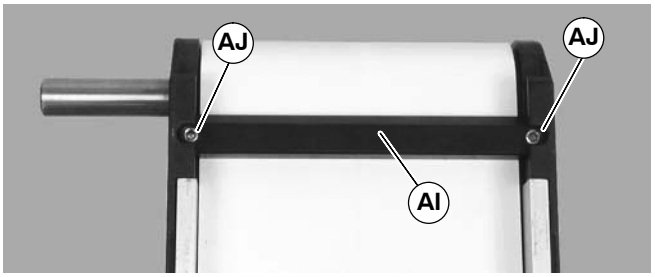

Figure 15

2. If equipped, remove return rollers and guiding and accessories from one side of conveyor.
3. Loosen corner screws (AK of Figure 16), on each side of the drive module (AL).

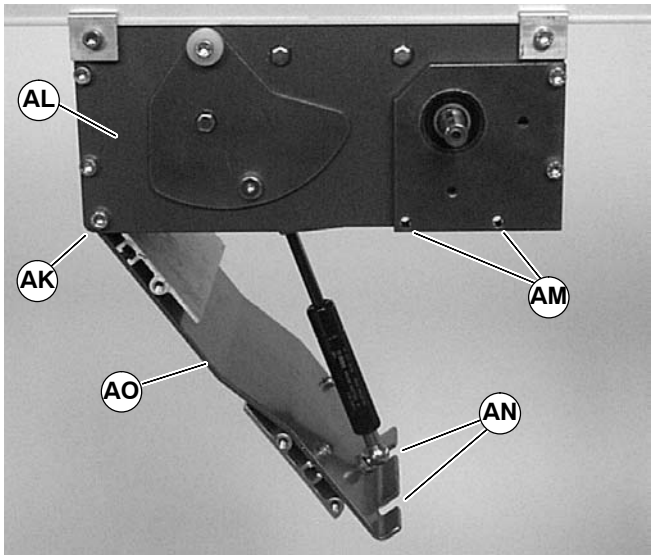

Figure 16

4. Remove tension door screws (AM) on each side of the drive module.
5. Using finger grip holes (AN), open the tension door (AO) to release conveyor belt tension.
6. On tension end of the conveyor, identified with a label (R of Figure 17), push in head plate assembly (S): On both sides of conveyor, loosen and move cam tracking assemblies (T) (if equipped) away from head plates, then loosen fastening screws (U) and push head plate assembly inward.

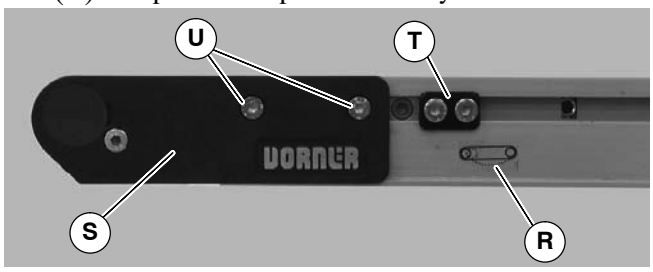

Figure 17

7. Remove conveyor belt from conveyor ends. See **NOTE**.

NOTE: On conveyors 1219 mm and shorter by 203 mm and wider, it is be necessary to remove the drive module at the same time the conveyor belt is removed. See "Drive Module Removal", page 12.

8. Proceed to "Drive Module Removal", page 12 and "Belt Removal from Drive Module", page 12.

Belt Removal for Conveyor With Stands and Gearmotor Mounting Package

1. If equipped, remove bottom wipers (AI of Figure 18): Remove fastening screws (AJ) then remove wiper (AI).

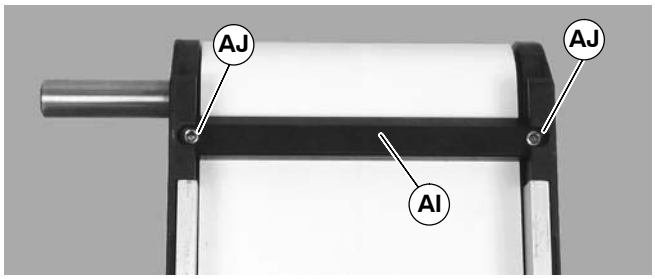

Figure 18

2. If equipped, remove return rollers and guiding and accessories from one side of conveyor.
3. Remove Gearmotor Mounting Package. See "Gearmotor Mounting Package Removal", page 11.
4. Loosen corner screws (AK of Figure 19), on each side of the drive module (AL).

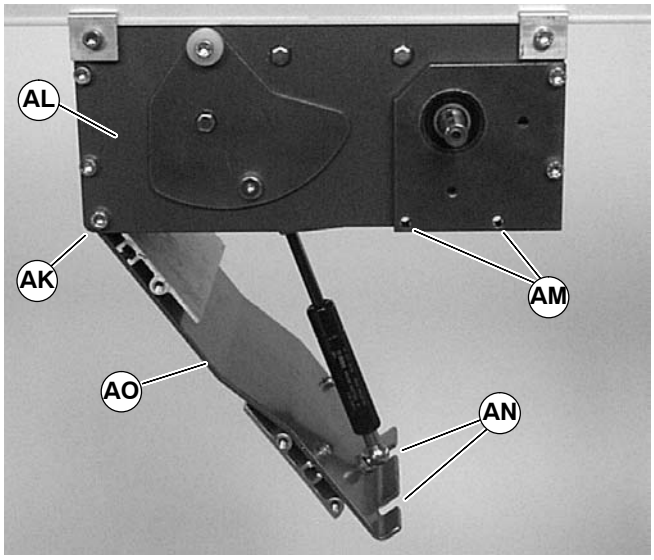

Figure 19

5. Remove tension door screws (AM) on each side of the drive module.

NOTE: With vertically mounted gearmotors, tension door screws (AM) are removed from one side when the gearmotor mounting package is removed.

6. Using finger grip holes (AN), open the tension door (AO) to release conveyor belt tension.
7. On tension end of the conveyor, identified with a label (R of Figure 20), push in head plate assembly (S): On both sides of conveyor, loosen and move cam tracking assemblies (T) (if equipped) away from head plates, then loosen fastening screws (U) and push head plate assembly inward.

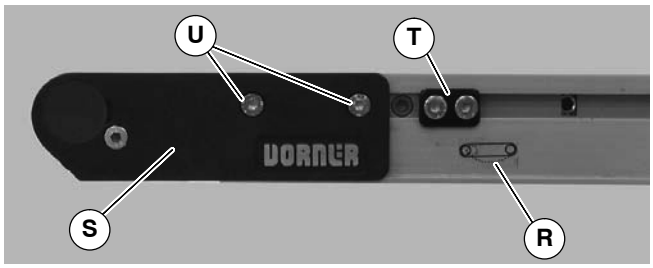

Figure 20

8. Place temporary support stands (AP of Figure 21) at both ends of the conveyor.

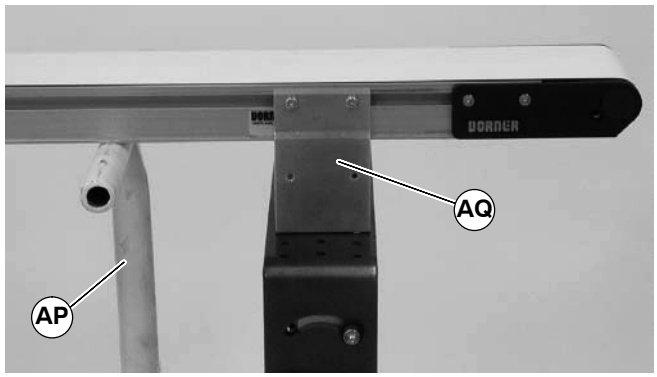

Figure 21

9. Remove mounting brackets (AQ of Figure 21) from one side of conveyor. (Reverse steps 3 & 4 of "Mounting Brackets" section, page 6.)
10. Remove conveyor belt from conveyor ends. See **NOTE**.

NOTE: On conveyors 1219 mm and shorter by 203 mm and wider, it is be necessary to remove the drive module at the same time the conveyor belt is removed. See "Drive Module Removal", page 12.

11. Proceed to "Drive Module Removal", page 12 and "Belt Removal from Drive Module", page 12.

Gearmotor Mounting Package Removal

1. Remove cover screws (AR of Figure 22) and remove cover (AS).

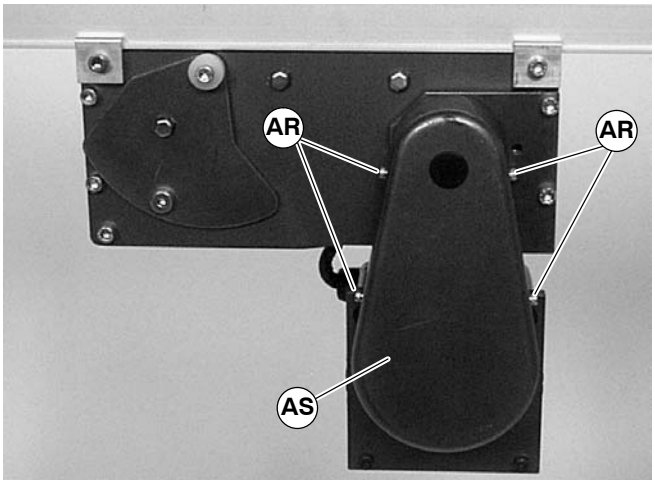

Figure 22

NOTE: Figures 22 & 23 show vertically mounted gearmotor. Horizontally mounted gearmotor is similar.

2. Loosen belt tensioner (AT of Figure 23) then remove timing belt (AU).

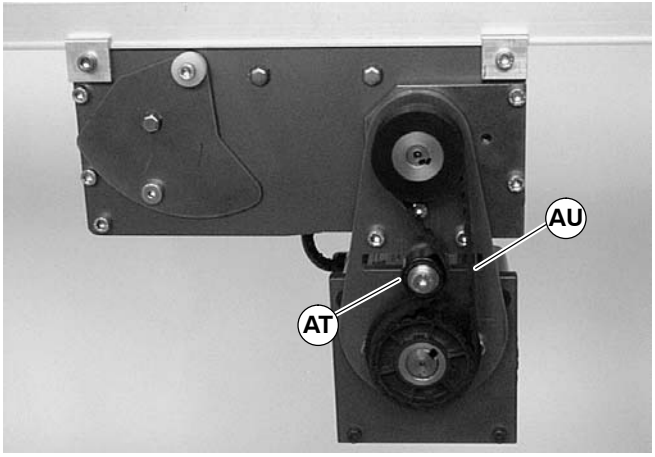

Figure 23

NOTE: If the timing belt does not slide over the pulley flange, loosen the driven pulley set screws (AV of Figure 24) and remove the pulley (AW) with the belt (AY).

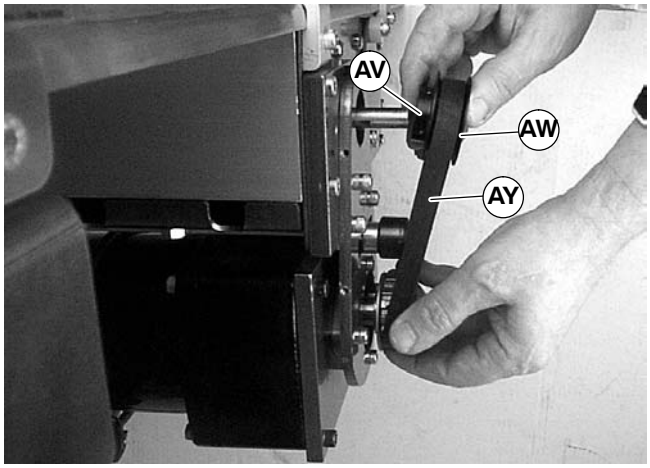

Figure 24

3. Remove three mounting screws (AZ of Figure 25) and remove gearmotor.

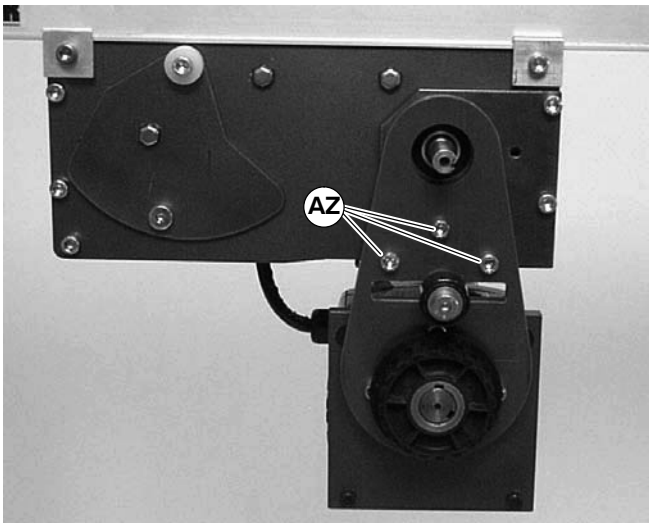

Figure 25

Drive Module Removal

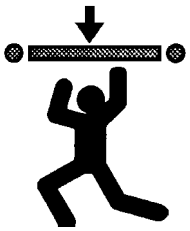

WARNING

Removing drive module without support under the module may lead to personel injury.

PROVIDE SUPPORT UNDERNEATH THE DRIVE MODULE BEFORE REMOVING THE MODULE.

NOTE: If desired, mark position of drive module on conveyor before removal.

1. Place temporary support (BA of Figure 26) underneath the drive module.

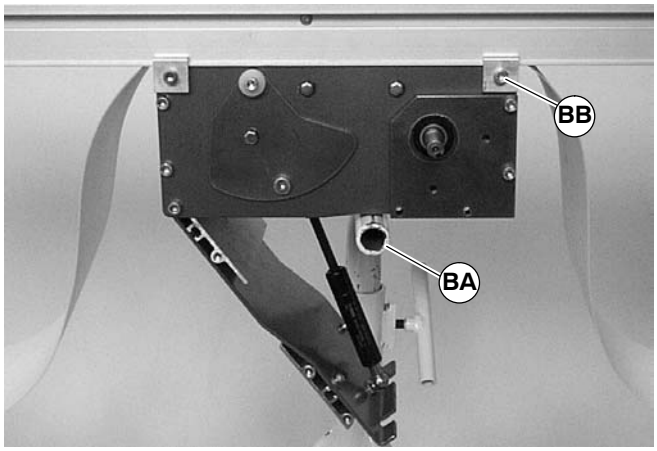

Figure 26

2. Loosen clamp screws (BB) on each corner of the module. Remove the module.

Belt Removal from Drive Module

1. Remove drive plate screws (BC of Figure 27). Remove the tension drive plate (BD).

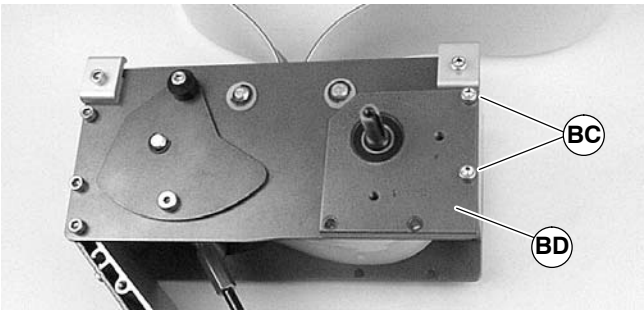

Figure 27

2. Remove drive pulley (BE of Figure 28).

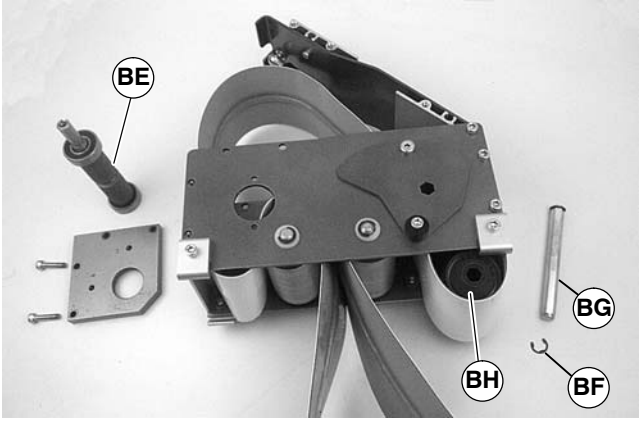

Figure 28

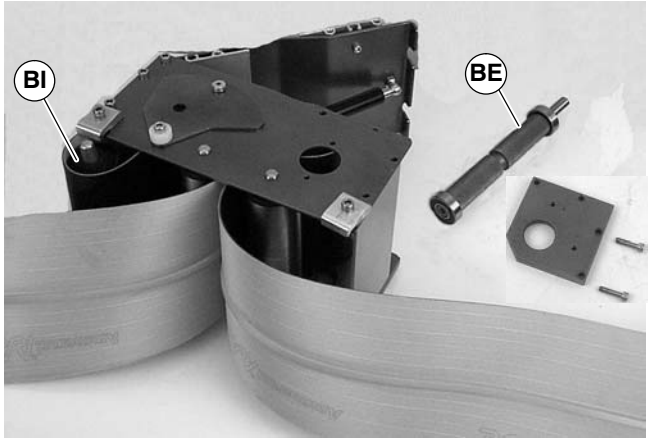

Figure 29

3. Remove grooved idler pulley:
   - For 44 mm, 70 mm or 95 mm wide conveyor, detach E-ring clip (BF of Figure 28). Remove pulley shaft (BG) and remove pulley (BH).
   - For 127 mm or wider conveyor, depress both sides of spring-loaded shaft and remove pulley (BI of Figure 29).
4. Remove the conveyor belt.

Conveyor Belt Installation

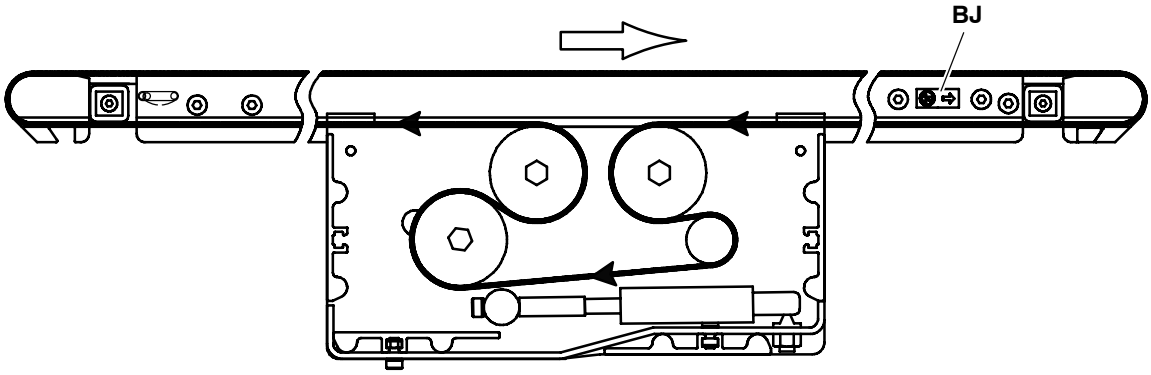

Conveyor Belt Routing

Figure 30

IMPORTANT: On a center drive conveyors, belt travel direction is identified by an arrow decal on the side of the conveyor (BJ of Figures 31 & 30).

Figure 31

NOTE: It is necessary to replace the drive module at the same time the conveyor belt is replaced on conveyors 1219 mm and shorter by 203 mm and wider.

1. Orient the conveyor belt so that the splice leading fingers (BK of Figure 32) point in the direction of belt travel, indicated by the label (BJ of Figure 31).

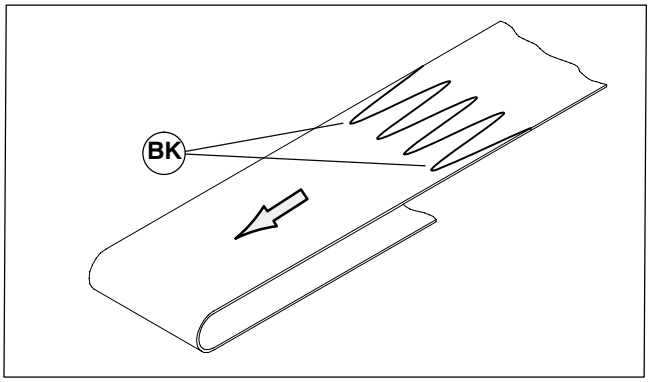

Figure 32

2. Place loop of belt (BL of Figure 33) into the drive module between top idler pulleys (BM).

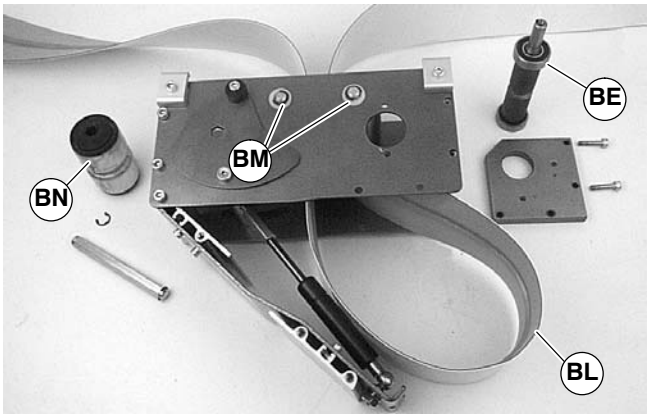

Figure 33

3. Place grooved idler pulley (BN of Figure 33) into the belt loop and install it in the drive module. Refer to "Belt Removal from Drive Module" on page 12 and reverse step 3.
4. Place drive pulley (BE of Figure 33) into the belt loop and install it in the drive module. Refer to "Belt Removal from Drive Module" on page 12 and reverse steps 1 and 2. Tighten screws (BC of Figure 27) to 9 Nm.
5. Install the drive module onto the conveyor and attach clamps (BB of Figure 26) in each corner. Tighten screws to 9 Nm.
6. Route and install the belt over both ends of the conveyor.
7. On conveyors with stands, re-install conveyor mounting brackets. Refer to "Mounting Brackets", page 6, steps 3 through 5.
8. Adjust the conveyor tensioning end. See "Conveyor Tensioning End Adjustment", page 14.

WARNING

Tension door closes quickly, may cause injury.

KEEP FINGERS CLEAR OF TENSION DOOR.

9. Carefully close the drive module tension door (BO of Figure 34). See **WARNING**.

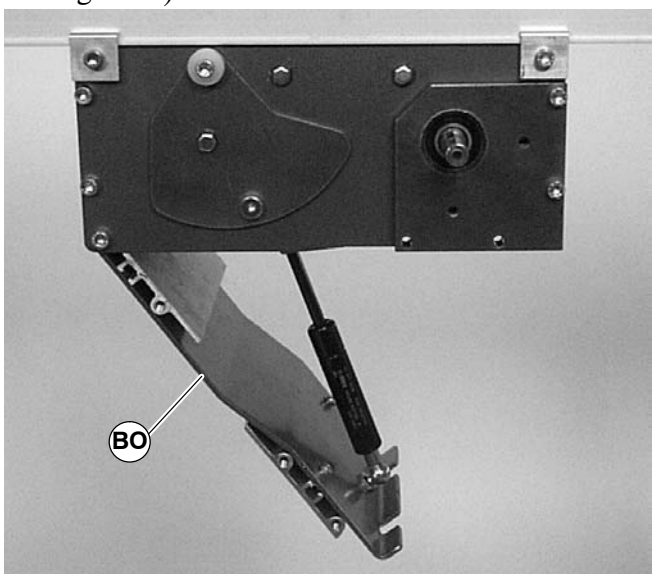

Figure 34

10. Tighten corner screws (BO of Figure 35) on each side of the drive module to 9 Nm.

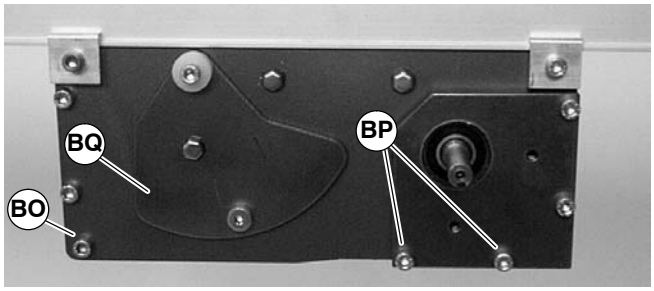

Figure 35

11. If equipped, re-install the gearmotor mounting package. Reverse steps of "Gearmotor Mounting Package Removal" procedure on page 11.

12. Re-install tension door screws (BP of Figure 35) on each side of the module. Tighten screws to 9 Nm.

NOTE: With vertically mounted gearmotors, tension door screws (BP) are installed on one side when the gearmotor mounting package is installed.

13. If equipped, re-install bottom wipers (AI of Figure 36): Install wiper (AI) then install screws (AJ).

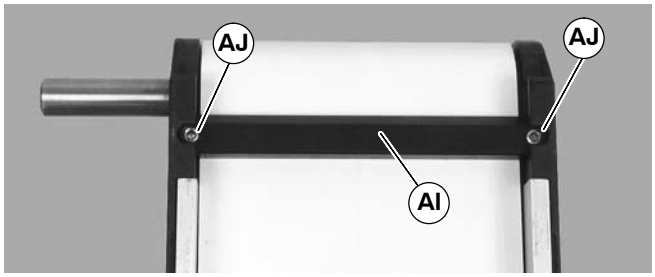

Figure 36

14. If equipped, replace guiding.

Conveyor Tension End Adjustment

WARNING

Exposed moving parts can cause severe injury.

LOCK OUT POWER before removing guards or performing maintenance.

Conveyors with 32 mm Diameter Pulleys

1. On tension end of the conveyor, identified with a label (R of Figure 37), adjust head plate assembly (S): On both sides of conveyor, loosen fastening screws (U) and rotate pinion gear (X) to adjust head plate assembly.

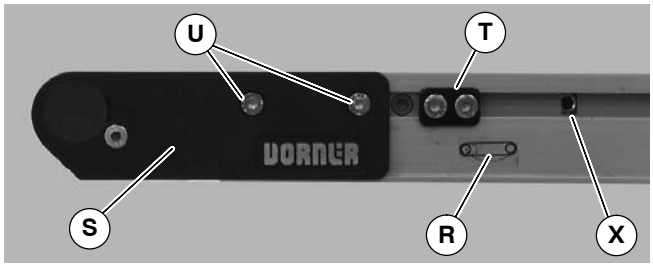

Figure 37

2. Adjust head plate assembly so end of conveyor frame aligns with first tensioning mark (BR of Figure 38). Tighten fastening screws (U of Figure 37) on both sides of conveyor to 7 Nm.

Figure 38

3. If equipped with cam tracking assemblies (T of Figure 37), reposition against head plates and adjust belt tracking. Refer to “Conveyor Belt Tracking”, page 16.

Conveyors with Nose Bar Idlers

1. On tension end of the conveyor, identified with a label (R of Figure 39), adjust head plate assembly (S): On both sides of conveyor, loosen fastening screws (U) and rotate pinion gear (X) to adjust head plate assembly.

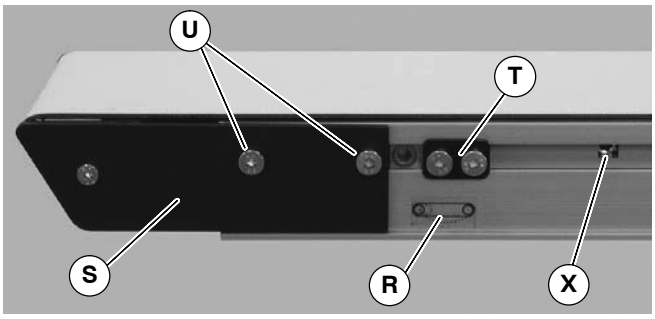

Figure 39

2. Adjust head plate assembly so the edge of the axle support plate (BS of Figure 40) is separated from the end of the conveyor (BT) by 29 mm. Tighten fastening screws (U of Figure 39) on both sides of conveyor to 7 Nm.

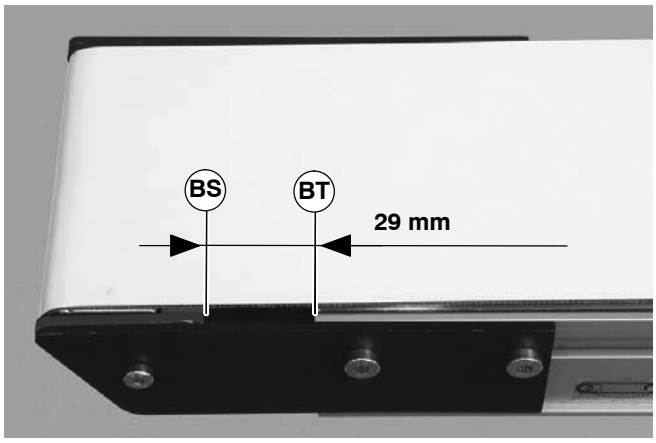

Figure 40

3. If equipped with cam tracking assemblies (T of Figure 39) position against head plates and adjust belt tracking. Refer to “Conveyor Belt Tracking”, page 16.

Conveyor Belt Tensioning

The conveyor is equipped with an automatic tensioning cylinder. No tensioning adjustment is required.

For a new belt, the tension plate (BQ of Figure 41) will be in position indicated below left. When the tension plate extends to position indicated below right, the conveyor belt must be replaced.

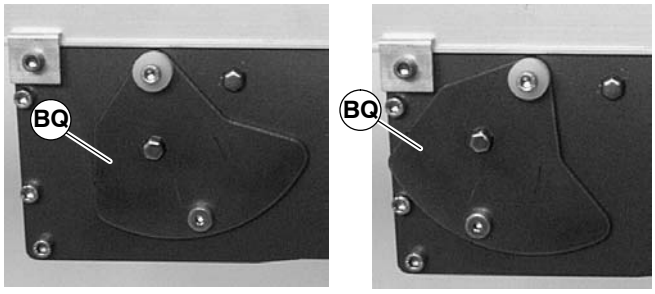

New Belt Change Belt

Figure 41

Conveyor Belt Tracking

V-Guided Belts

V-guided belts do not require tracking adjustment.

Non V-Guided Belts

Non V-guided belt conveyors are equipped with belt tracking cam assemblies (T of Figure 42) for belt tracking adjustment.

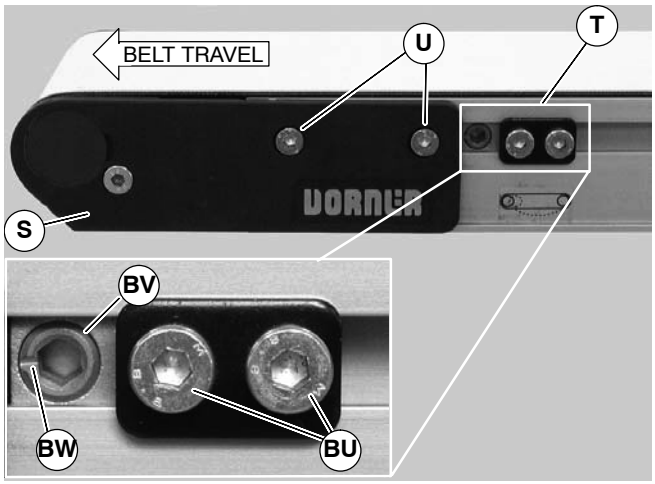

Figure 42

When adjusting belt tracking, always adjust the discharge end of the conveyor first. To adjust belt tracking:

1. Ensure head plate fastening screws (U of Figure 42) on both sides of conveyor are tightened.
2. On both sides of conveyor, loosen two (2) cam fastening screws (BU). Adjust cams (BV) until indicator slots (BW) are horizontal and facing end of conveyor. Then slide cam assemblies against head plates (S) and re-tighten cam fastening screws (BU) to 7 Nm.
3. On the side toward which the belt is tracking, loosen head plate fastening screws (U).
4. With the conveyor running, use a 5 mm hex-key wrench to rotate the tracking cam (BV) in small increments until the belt tracks in the center of the conveyor. Then while holding the cam in position, re-tighten the head plate fastening screws (U) with a 4 mm hex-key wrench to 7 Nm.

Pulley Removal

WARNING

Exposed moving parts can cause severe injury.

LOCK OUT POWER before removing guards or performing maintenance.

Remove the conveyor belt to access the pulley(s). Perform the indicated steps of one of the following procedures:

- "Belt Removal for Conveyor Without Gearmotor Mounting Package or Stands", page 9, steps 1 through 7.
- "Belt Removal for Conveyor With Stands and Gearmotor Mounting Package", page 10, steps 1 through 10.

Remove desired pulley following procedures:

- Conveyor End Pulley Removal
- Module Drive Pulley Removal
- Module Idler Pulley Removal

Conveyor End Pulley Removal

1. On both sides of conveyor, loosen two (2) fastening screws (U of Figure 43). Then slide idler pulley assembly out from the conveyor frame.

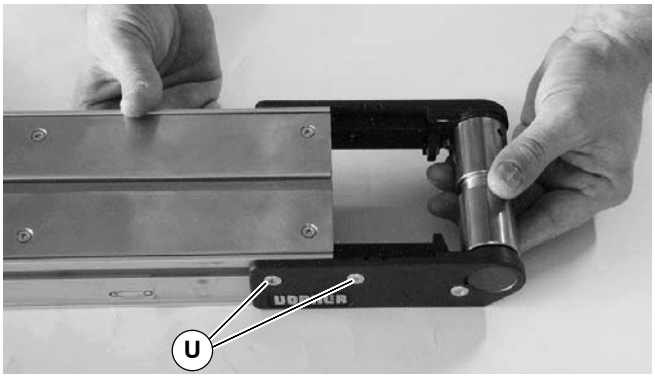

Figure 43

2. Remove bearing covers (BX of Figure 44).

Figure 44

3. With 4mm hex-key wrench, loosen pulley taper screw (BY of Figure 45). Steady pulley with second hex-key wrench (BZ) inserted into pulley hole. Repeat procedure for opposite side of pulley.

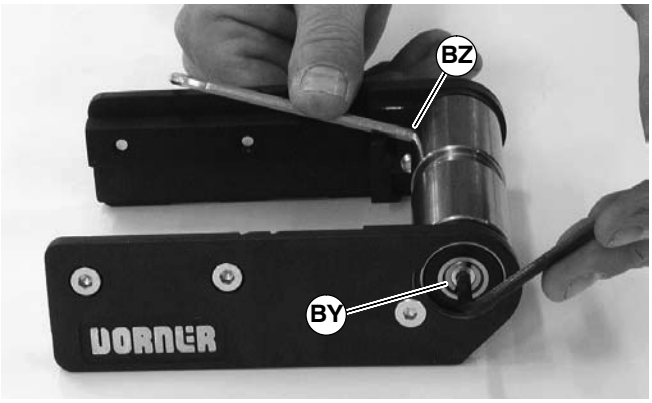

Figure 45

NOTE: Idler shaft is held to bearing inner race with a mild loctite. The bearing must be pulled from the idler using a gear puller or similar device.

4. With bearing removal tool, (CS of Figure 46), part number 807–1078, remove head plate from idler shaft side of pulley. Connect tool jaws at indicated points (CT).

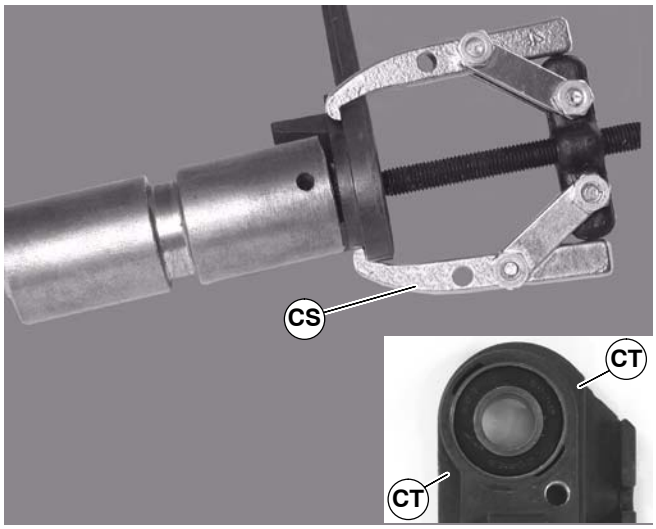

Figure 46

5. Repeat step 4 on opposite side.

Drive Module Drive Pulley Removal

1. Remove the gearmotor drive package. Refer to “Gearmotor Mounting Package Removal”, page 11.
2. Remove the drive module. Refer to “Drive Module Removal”, page 12.
3. Remove the drive pulley. Refer to “Belt Removal from Drive Module”, page 12, steps 1 and 2.

Drive Module Idler Pulley Removal

1. Remove the gearmotor drive package. Refer to "Gearmotor Mounting Package Removal", page 11.
2. Remove the drive module. Refer to "Drive Module Removal", page 12.
3. Remove the grooved idler pulley. Refer to "Belt Removal from Drive Module", page 12, step 3.
4. Remove smooth idler pulleys:

- For 44 mm, 70 mm or 95 mm wide conveyor, detach E-ring clips and remove washers (CA of Figure 47). Remove pulley shafts (CB) and pulleys (CC).

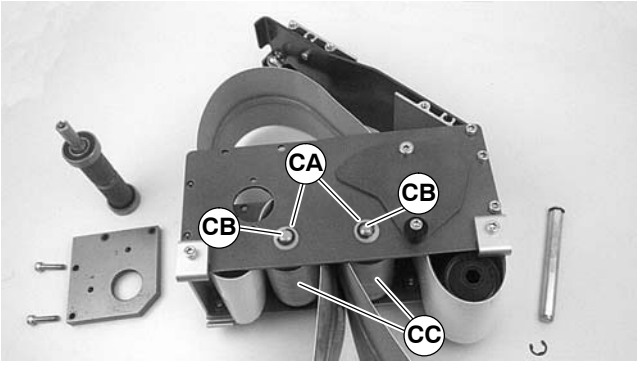

Figure 47

- For 127 mm or wider conveyor, depress both sides of each spring-loaded shaft (CD of Figure 48). Remove pulleys (CE).

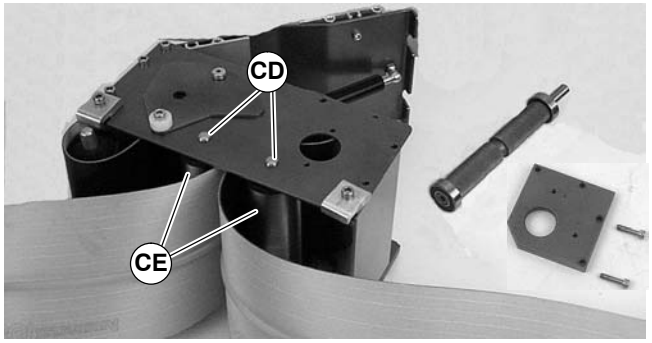

Figure 48

Conveyor Pulley Bearing Replacement

Removal

1. Turn bearing (CF of Figure 49) to align with slots (CH) in head plate. Then remove bearing.

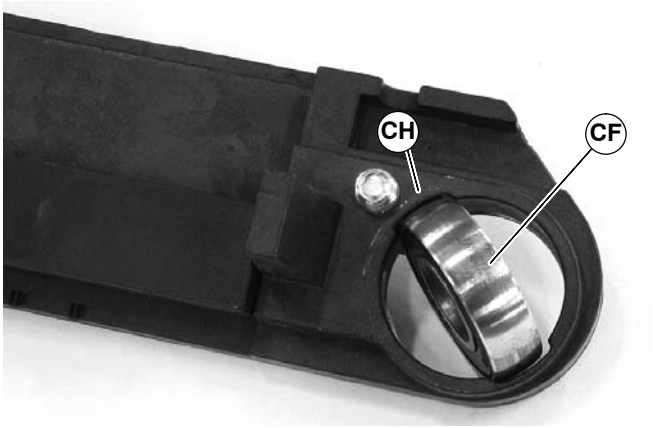

Figure 49

Replacement

1. Inspect head plate bearing surface. If worn or damaged, replace head plate. See "Service Parts", page 40.
2. Insert bearing (CF of Figure 50) into head plate slot and twist bearing to fit into bearing enclosure.

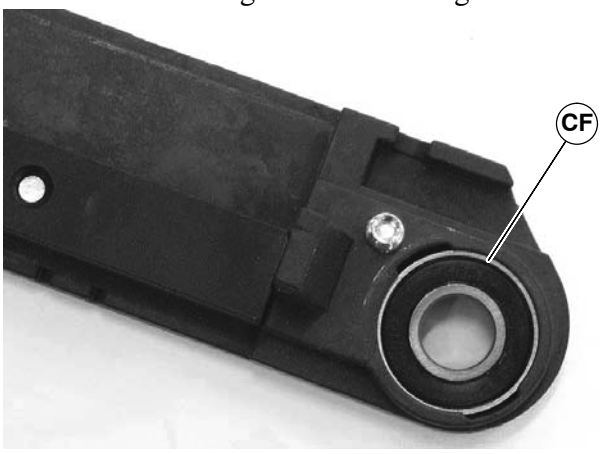

Figure 50

Bearing Replacement for Drive Pulley

IMPORTANT: Once removed, do not re-use bearings.

Bearing Removal

1. Locate drive pulley (CI of Figure 51) in a standard bearing separator (CJ) as shown.

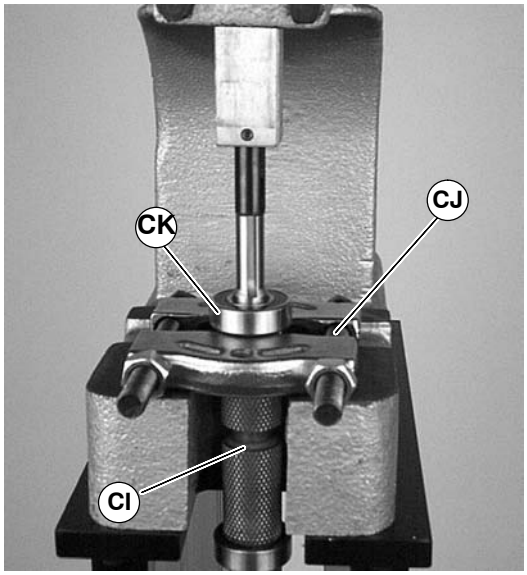

Figure 51

2. Using arbor press or similar device, press-off bearing (CK).

Bearing Installation

1. Inspect seating surface(s) for damage. Replace if damaged.

2. Place two (2) 5/8 flat washers, or equivalent (CL of Figure 52), over the pulley shaft (CM) and against bearing (CK) (part # 802-124).

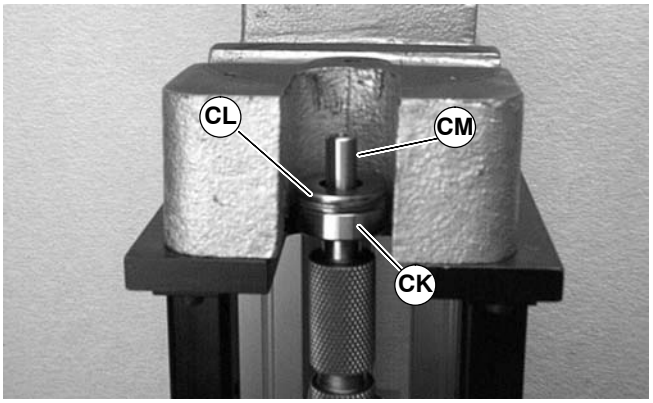

Figure 52

3. Place the shaft of tool (part # 450282) (CN of Figure 53) over pulley shaft (CM).

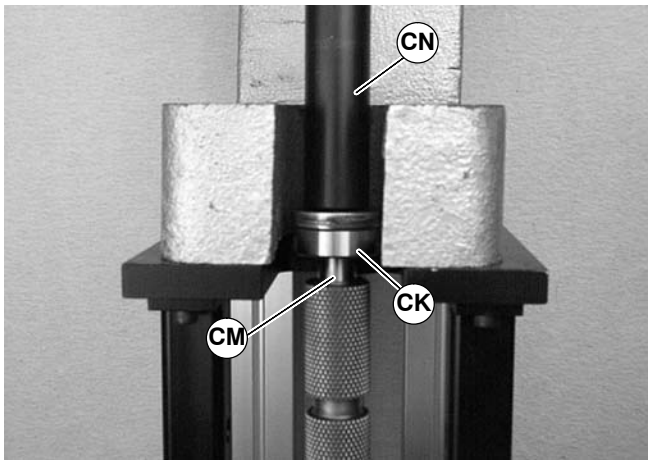

Figure 53

4. Using arbor press or similar device, press bearing onto pulley shaft as shown.

Bearing Replacement for Idler Pulleys

NOTE: Bearings can not be removed from idler pulleys. Replace entire pulley, when worn. See Service Parts section on page 40.

Pulley Replacement

Conveyor End Pulley

NOTE: Do not use and excessive amount of Loctite 641. Excess may leak into bearing, causing bearing failure.

1. Apply a small amount of Loctite 641, or equivalant, to the outside of stub shaft (CU of Figure 54).

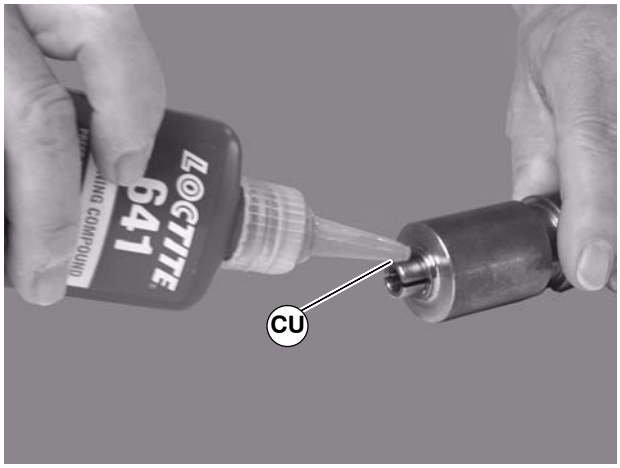

Figure 54

2. With bearing installed in head plate, press bearing on to shaft (CH of Figure 55) of pulley.

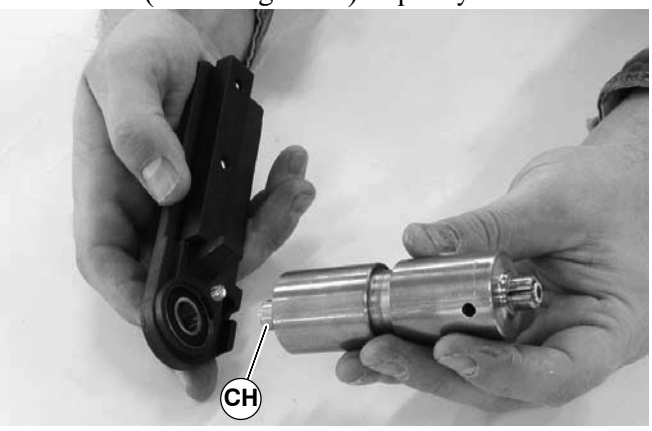

Figure 55

3. Repeat steps 1 and 2 0n opposite side of pulley.

NOTE: DO NOT tighten shaft bearing taper screws at this time.

4. Install pulley assembly on conveyor. On both sides of conveyor, hand tighten fastening screws (U of Figure 56).

Figure 56

5. On both sides of pulley, use a 4mm hex-key wrench to tighten pulley taper screw (BY of Figure 57) to 8.5 Nm. Steady pulley with second hex-key wrench (BZ) inserted into pulley hole.

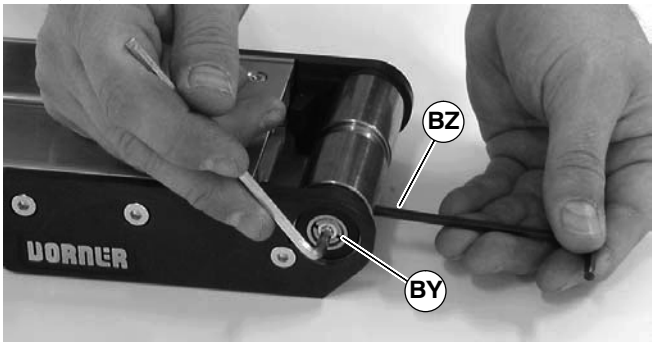

Figure 57

6. Install bearing covers (BX of Figure 58).

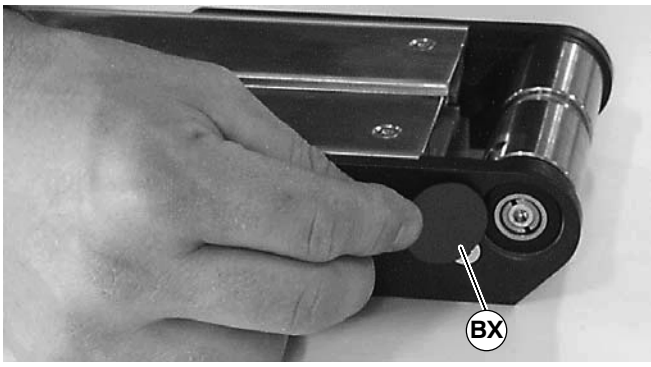

Figure 58

7. Re-install belt on end of conveyor, then tension the belt. See “Conveyor Tension End Adjustment”, page 14.

8. Re-position the cam assemblies against the head plates and adjust belt tracking. See “Conveyor Belt Tracking”, page 16.

Drive Module Drive Pulley

1. Reverse "Drive Module Drive Pulley Removal" procedure on page 17.
2. Re-install belt on end of conveyor, then tension the belt. See "Conveyor Tension End Adjustment", page 14.
3. Re-position the cam assemblies against the head plates and adjust belt tracking. See "Conveyor Belt Tracking", page 16.

Drive Module Idler Pulley

1. Reverse "Drive Module Idler Pulley Removal" procedure on page 18.
2. Re-install belt on end of conveyor, then tension the belt. See "Conveyor Tension End Adjustment", page 14.
3. Re-position the cam assemblies against the head plates and adjust belt tracking. See "Conveyor Belt Tracking", page 16.

Nose Bar Bearing Replacement

WARNING

Exposed moving parts can cause severe injury.

LOCK OUT POWER before removing guards or performing maintenance.

1. Remove the conveyor belt to access the bearings. Perform the indicated steps of one of the following procedures:
   - "Belt Removal for Conveyor Without Gearmotor Mounting Package or Stands", page 9, steps 1 through 7.
   - "Belt Removal for Conveyor With Stands and Gearmotor Mounting Package", page 10, steps 1 through 10.
2. On one side of conveyor, use a 3 mm and 4 mm hex-key wrench to remove head plate fastening screws (CQ & U of Figure 59) and remove head plate (S).

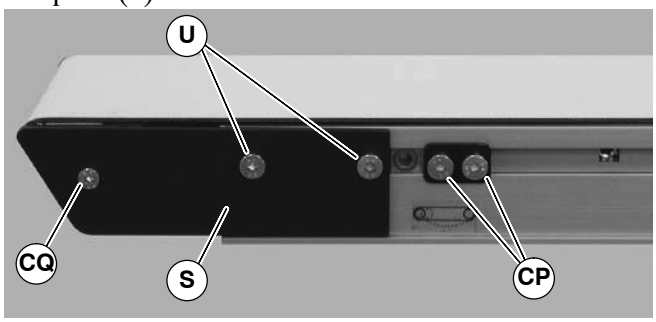

Figure 59

3. Slide bearing rods (CR of Figure 60) out side of conveyor and replace bearings (CS) as necessary.

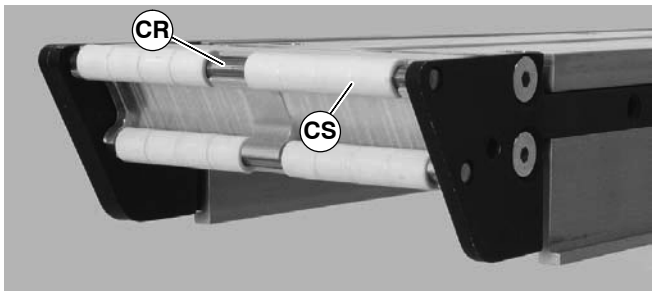

Figure 60

4. After replacing bearings, re-install head plate (S of Figure 59). Use a 3 mm hex-key wrench to tighten one (1) fastening screw (CQ) to 3.4 Nm. Leave two (2) fastening screws (U) loose for belt tensioning.
5. Re-install belt on end of conveyor, then tension the belt. See "Conveyor Tension End Adjustment", page 14.
6. Re-position the cam assemblies against the head plates and adjust belt tracking. See "Conveyor Belt Tracking", page 16.

Service Parts

NOTE: For replacement parts other than those shown on this page, contact an authorized Dorner Service Center or the factory.

51mm Wide Conveyor Assembly

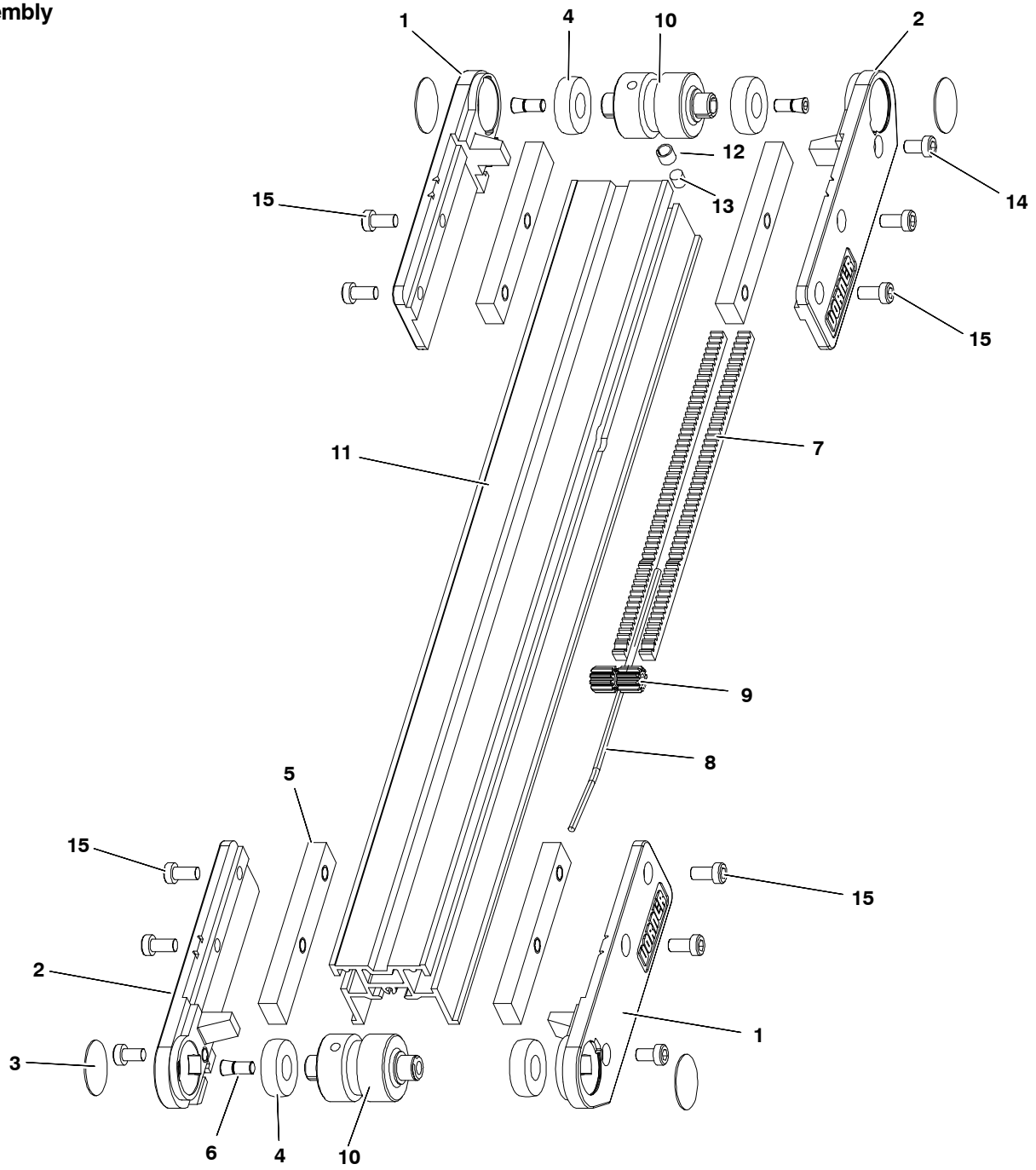

Item	Part Number	Description
1	240325	Head Plate LH
2	240326	Head Plate RH
3	240327	Bearing Cover Disk
4	240328	Bearing
5	240329	Tension Slide Bar
6	240330	Taper Screw
7	240420	Rack Gear 14.5 PA x 24 P
8	240422	Pinion Pin
9	240423	Pinion 51mm
10	240702	Idler Spindle 51mm
11	See Chart Below	51mm Frame
12	450226SSP	Sleeve, 7mm Magnet Stainless Steel
13	808–020	Magnet 7mm Dia x 7mm Long
14	920691M	Socket Head Screw M6 x 10mm
15	920692M	Socket Head Screw M6 x 12mm

Item 12: 51mm Conveyor Frame		
Length	Part Number	
610mm	240402–01908	
914mm	240402–03108	
1219mm	240402–04308	
1524mm	240402–05508	
1829mm	240402–06708	
2134mm	240402–07908	
2438mm	240402–09108	
2743mm	240402–10308	
3048mm	240402–11508	
3353mm	240402–12708	
3658mm	240402–13908	
3962mm	240402–07908	240402–07200
4267mm	240402–09108	240402–07200
4572mm	240402–10308	240402–07200
4877mm	240402–11508	240402–07200
5182mm	240402–12708	240402–07200
5486mm	240402–13908	240402–07200
5791mm	240402–07908	240402–14400
6096mm	240402–09108	240402–14400
6401mm	240402–10308	240402–14400
6706mm	240402–11508	240402–14400
7010mm	240402–12708	240402–14400
7315mm	240402–13908	240402–14400

76mm to 152mm Wide Conveyor Assembly

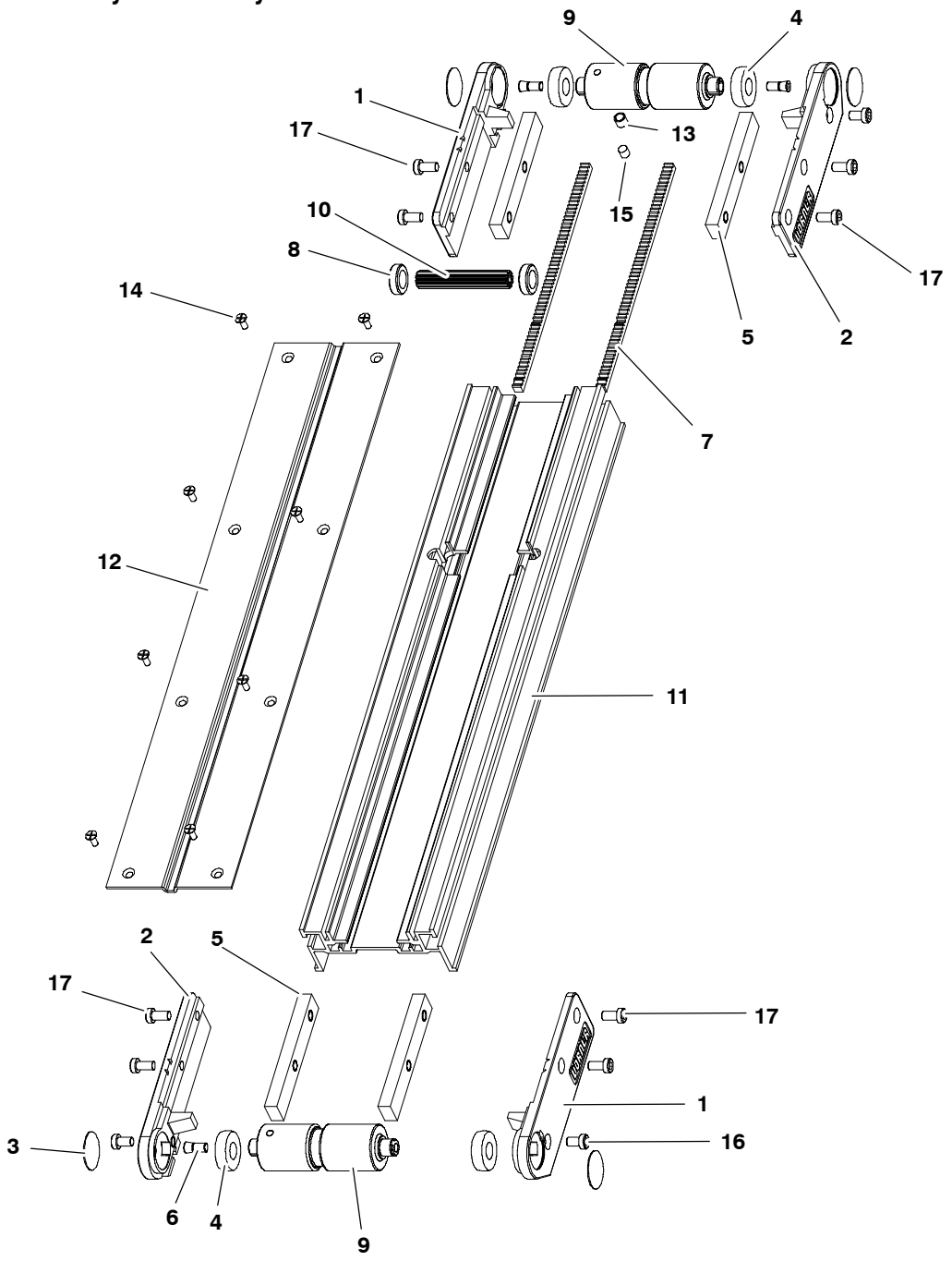

Item	Part Number	Description
1	240325	Head Plate LH
2	240326	Head Plate RH
3	240327	Bearing Cover Disk
4	240328	Bearing
5	240329	Tension Slide Bar
6	240330	Taper Screw
7	240420	Rack Gear 14.5 PA x 24 P
8	240421	Pinion Bushing
9	240703	Idler Spindle 76mm
	240704	Idler Spindle 102mm
	240705	Idler Spindle 127mm
	240706	Idler Spindle 152mm
10	203003M	Gear Pinion 76mm
	203004M	Gear Pinion 102mm
	203005M	Gear Pinion 127mm
	203006M	Gear Pinion 152mm
11	See Chart Below	Conveyor Frame
12	See Chart Below	Bed Plate
13	450226SSP	Sleeve, 7mm Magnet Stainless Steel
14	807–1074	Flat Head Screw M4 x 10mm
15	808–020	Magnet 7mm Dia x 7mm Long
16	920691M	Socket Head Screw M6 x 10mm
17	920692M	Socket Head Screw M6 x 12mm

Item 11: Conveyor Frame		
Length	Part Number	
610mm	2404WW–01908	
914mm	2404WW–03108	
1219mm	2404WW–04308	
1524mm	2404WW–05508	
1829mm	2404WW–06708	
2134mm	2404WW–07908	
2438mm	2404WW–09108	
2743mm	2404WW–10308	
3048mm	2404WW–11508	
3353mm	2404WW–12708	
3658mm	2404WW–13908	
3962mm	2404WW–07908	2404WW–07200
4267mm	2404WW–09108	2404WW–07200
4572mm	2404WW–10308	2404WW–07200
4877mm	2404WW–11508	2404WW–07200
5182mm	2404WW–12708	2404WW–07200
5486mm	2404WW–13908	2404WW–07200
5791mm	2404WW–07908	2404WW–14400
6096mm	2404WW–09108	2404WW–14400
6401mm	2404WW–10308	2404WW–14400
6706mm	2404WW–11508	2404WW–14400
7010mm	2404WW–12708	2404WW–14400
7315mm	2404WW–13908	2404WW–14400
WW = Conveyor Width reference: 03, 04, 05, 06		

Item 12: Bed Plate		
Length	Part Number	
610mm	2405WW–01904	
914mm	2405WW–03104	
1219mm	2405WW–04304	
1524mm	2405WW–05504	
1829mm	2405WW–06704	
2134mm	2405WW–07904	
2438mm	2405WW–09104	
2743mm	2405WW–10304	
3048mm	2405WW–11504	
3353mm	2405WW–12704	
3658mm	2405WW–13904	
4267mm	2405WW–09108	2405WW–07196
4572mm	2405WW–10308	2405WW–07196
4877mm	2405WW–11508	2405WW–07196
5182mm	2405WW–12708	2405WW–07196
5486mm	2405WW–13908	2405WW–07196
5791mm	2405WW–07908	2405WW–14396
6096mm	2405WW–09108	2405WW–14396
6401mm	2405WW–10308	2405WW–14396
6706mm	2405WW–11508	2405WW–14396
7010mm	2405WW–12708	2405WW–14396
7315mm	2405WW–13908	2405WW–14396
WW = Conveyor Width reference: 03, 04, 05, 06		

203mm to 605mm Wide Conveyor Assembly

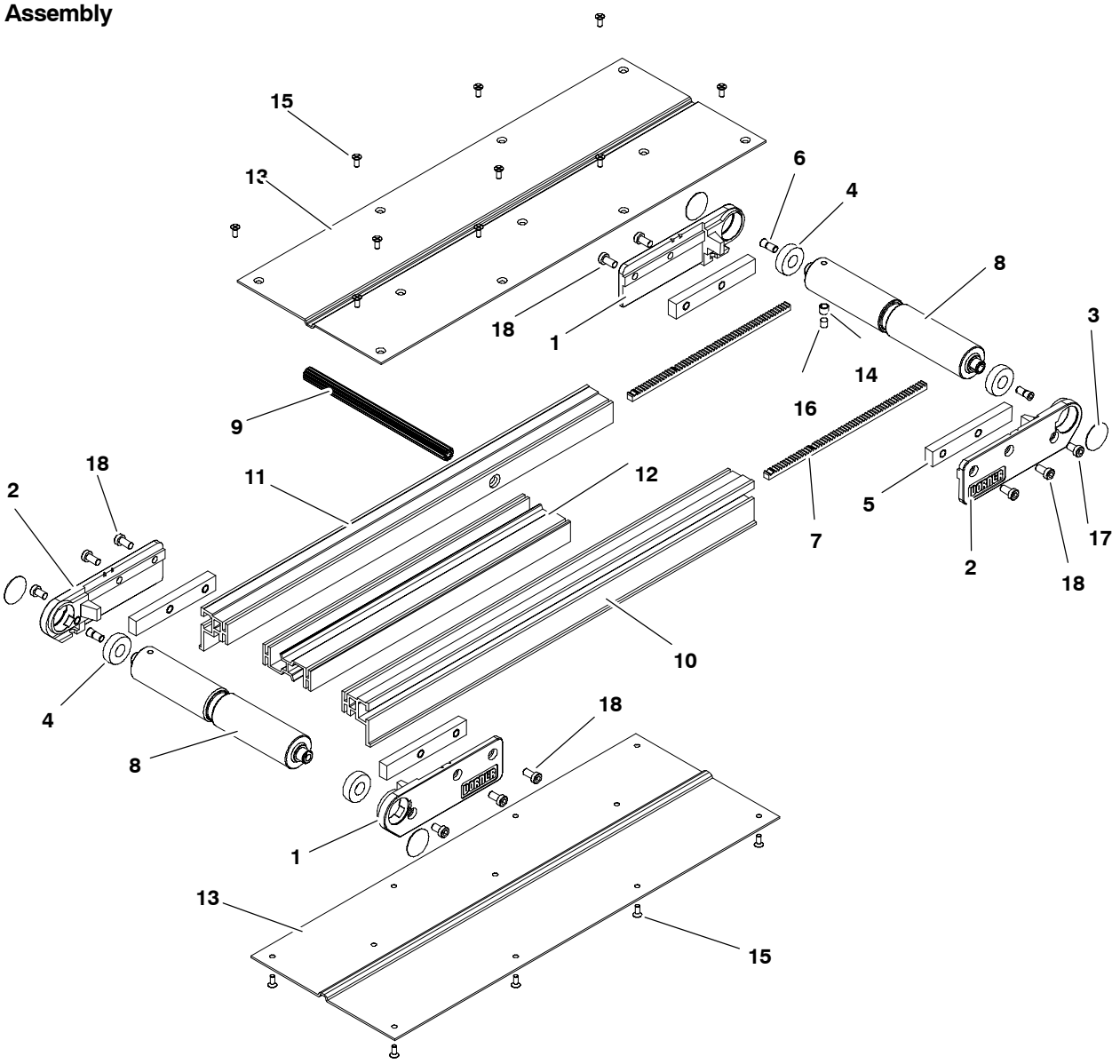

Item	Part Number	Description
1	240325	Head Plate LH
2	240326	Head Plate RH
3	240327	Bearing Cover Disk
4	240328	Bearing
5	240329	Tension Slide Bar
6	240330	Taper Screw
7	240420	Rack Gear 14.5 PA x 24P
8	240708	Idler Spindle 203mm
	240710	Idler Spindle 254mm
	240712	Idler Spindle 305mm
9	203008M	Pinion Gear 203mm
	203010M	Pinion Gear 254mm
	203012M	Pinion Gear 305mm

10	See Chart Below	Side Rail RH Wide 203–610mm
11	See Chart Below	Side Rail LH Wide 203–610mm
12	See Chart Below	Center Rail Wide 203–305mm
13	See Chart Below	Bed Plate
14	450226SSP	Sleeve 7mm Magnet Stainless Steel
15	807–1074	Flat Head Screw M4 x 10mm
16	808–020	Magnet 7mm DIA x 7mm Long
17	920691M	Socket Head Screw M6 x 10mm
18	920692M	Socket Head Screw M6 x 12mm

Item 10: Side Rail RH Wide 203–610mm		
Length	Part Number	
610mm	240412–01908	
914mm	240412–03108	
1219mm	240412–04308	
1524mm	240412–05508	
1829mm	240412–06708	
2134mm	240412–07908	
2438mm	240412–09108	
2743mm	240412–10308	
3048mm	240412–11508	
3353mm	240412–12708	
3658mm	240412–13908	
3962mm	240412–07908	240412–07200
4267mm	240412–09108	240412–07200
4572mm	240412–10308	240412–07200
4877mm	240412–11508	240412–07200
5182mm	240412–12708	240412–07200
5486mm	240412–13908	240412–07200
5791mm	240412–07908	240412–14400
6096mm	240412–09108	240412–14400
6401mm	240412–10308	240412–14400
6706mm	240412–11508	240412–14400
7010mm	240412–12708	240412–14400
7315mm	240412–13908	240412–14400

Item 11: Side Rail LH Wide 203–610mm		
Length	Part Number	
610mm	240413–01908	
914mm	240413–03108	
1219mm	240413–04308	
1524mm	240413–05508	
1829mm	240413–06708	
2134mm	240413–07908	
2438mm	240413–09108	
2743mm	240413–10308	
3048mm	240413–11508	
3353mm	240413–12708	
3658mm	240413–13908	
3962mm	240413–07908	240413–07200
4267mm	240413–09108	240413–07200
4572mm	240413–10308	240413–07200
4877mm	240413–11508	240413–07200
5182mm	240413–12708	240413–07200
5486mm	240413–13908	240413–07200
5791mm	240413–07908	240413–14400
6096mm	240413–09108	240413–14400
6401mm	240413–10308	240413–14400
6706mm	240413–11508	240413–14400
7010mm	240413–12708	240413–14400
7315mm	240413–13908	240413–14400

Item 12: Center Rail Wide 203–305mm		
Length	Part Number	
610mm	240414–00998	
914mm	240414–02198	
1219mm	240414–03398	
1524mm	240414–04598	
1829mm	240414–05798	
2134mm	240414–06998	
2438mm	240414–08198	
2743mm	240414–09398	
3048mm	240414–10598	
3353mm	240414–11798	
3658mm	240414–12998	
3962mm	240414–06998	240414–06700
4267mm	240414–08198	240414–06700
4572mm	240414–09398	240414–06700
4877mm	240414–10598	240414–06700
5182mm	240414–11798	240414–06700
5486mm	240414–12998	240414–06700
5791mm	240414–06998	240414–14400
6096mm	240414–08198	240414–14400
6401mm	240414–09398	240414–14400
6706mm	240414–10598	240414–14400
7010mm	240414–11798	240414–14400
7315mm	240414–12998	240414–14400

Item 13: Bed Plate		
Length	Part Number	
610mm	2405WW–01904	
914mm	2405WW–03104	
1219mm	2405WW–04304	
1524mm	2405WW–05504	
1829mm	2405WW–06704	
2134mm	2405WW–07904	
2438mm	2405WW–09104	
2743mm	2405WW–10394	
3048mm	2405WW–11504	
3353mm	2405WW–12704	
3658mm	2405WW–13904	
3962mm	2405WW–07904	2405WW–07196
4267mm	2405WW–09104	2405WW–07196
4572mm	2405WW–10304	2405WW–07196
4877mm	2405WW–11504	2405WW–07196
5182mm	2405WW–12704	2405WW–07196
5486mm	2405WW–13904	2405WW–07196
5791mm	2405WW–07908	2405WW–14396
6096mm	2405WW–09108	2405WW–14396
6401mm	2405WW–10308	2405WW–14396
6706mm	2405WW–11508	2405WW–14396
7010mm	2405WW–12708	2405WW–14396
7315mm	2405WW–13908	2405WW–14396
WW = Conveyor Width reference: 08, 10, 12		

457mm to 610mm Wide Conveyor Assembly

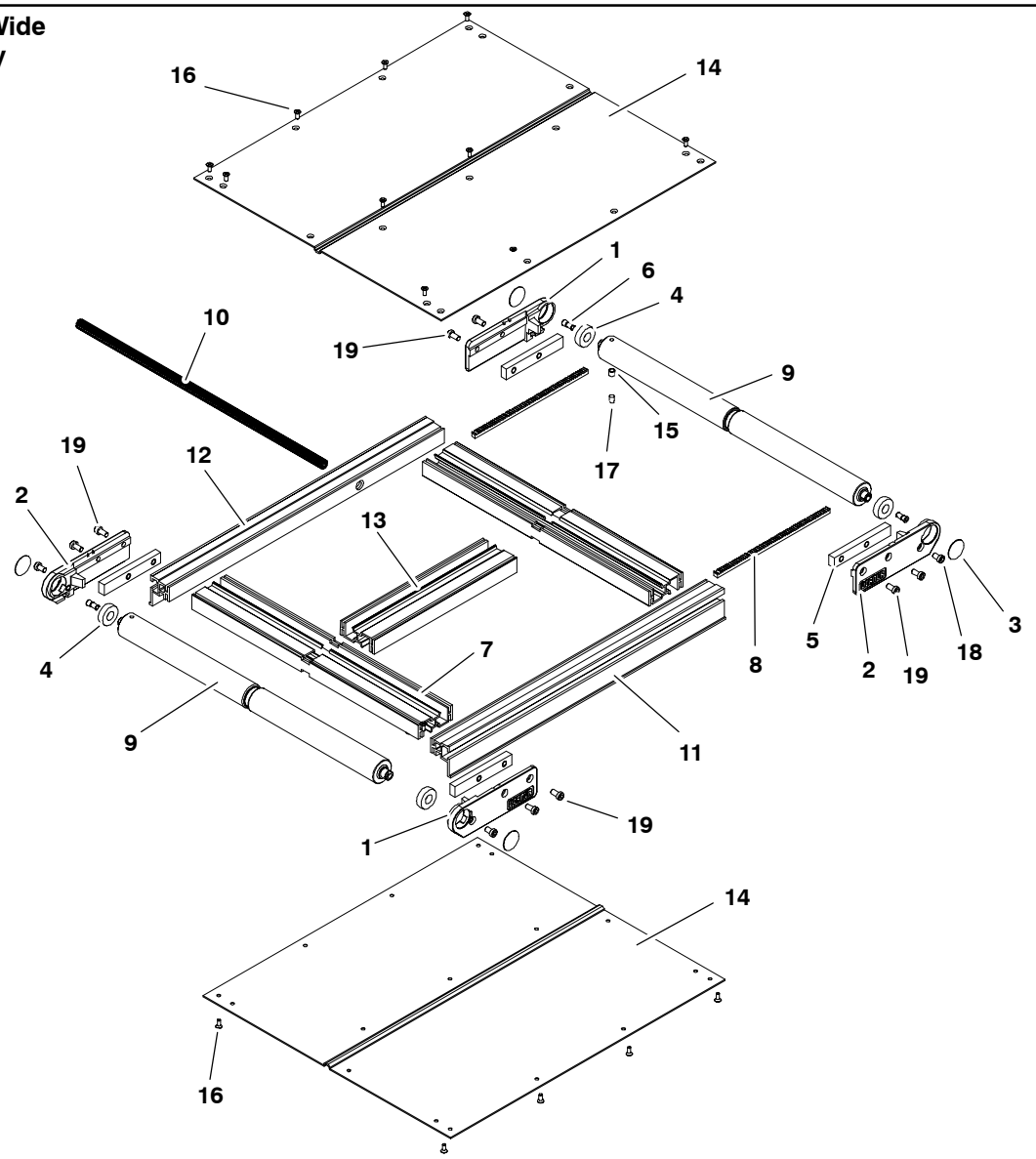

Item	Part Number	Description
1	240325	Head Plate LH
2	240326	Head Plate RH
3	240327	Bearing Cover Disk
4	240328	Bearing
5	240329	Tension Slide Bar
6	240330	Taper Screw
7	240417	Center Rail Cross Support 457mm
	240418	Center Rail Cross Support 533mm
	240419	Center Rail Cross Support 610mm
8	240420	Rack Gear 14.5 PA x 24P
9	240718	Idler Spindle 457mm
	240721	Idler Spindle 533mm
	240724	Idler Spindle 610mm
10	203018M	Pinion Gear 457mm
	203021M	Pinion Gear 533mm
	203024M	Pinion Gear 610mm
11	See Chart Below	Side Rail RH Wide 203–610mm
12	See Chart Below	Side Rail LH Wide 203–610mm
13	See Chart Below	Center Rail Wide 203–305mm
14	See Chart Below	Bed Plate
15	450226SSP	Sleeve 7mm Magnet Stainless Steel
16	807–1074	Flat Head Screw M4 x 10mm
17	808–020	Magnet 7mm DIA x 7mm Long
18	920691M	Socket Head Screw M6 x 10mm
19	920692M	Socket Head Screw M6 x 12mm

Item 10: Side Rail RH Wide 203–610mm		
Length	Part Number	
610mm	240412–01908	
914mm	240412–03108	
1219mm	240412–04308	
1524mm	240412–05508	
1829mm	240412–06708	
2134mm	240412–07908	
2438mm	240412–09108	
2743mm	240412–10308	
3048mm	240412–11508	
3353mm	240412–12708	
3658mm	240412–13908	
3962mm	240412–07908	240412–07200
4267mm	240412–09108	240412–07200
4572mm	240412–10308	240412–07200
4877mm	240412–11508	240412–07200
5182mm	240412–12708	240412–07200
5486mm	240412–13908	240412–07200
5791mm	240412–07908	240412–14400
6096mm	240412–09108	240412–14400
6401mm	240412–10308	240412–14400
6706mm	240412–11508	240412–14400
7010mm	240412–12708	240412–14400
7315mm	240412–13908	240412–14400

Item 11: Side Rail LH Wide 203–610mm		
Length	Part Number	
610mm	240413–01908	
914mm	240413–03108	
1219mm	240413–04308	
1524mm	240413–05508	
1829mm	240413–06708	
2134mm	240413–07908	
2438mm	240413–09108	
2743mm	240413–10308	
3048mm	240413–11508	
3353mm	240413–12708	
3658mm	240413–13908	
3962mm	240413–07908	240413–07200
4267mm	240413–09108	240413–07200
4572mm	240413–10308	240413–07200
4877mm	240413–11508	240413–07200
5182mm	240413–12708	240413–07200
5486mm	240413–13908	240413–07200
5791mm	240413–07908	240413–14400
6096mm	240413–09108	240413–14400
6401mm	240413–10308	240413–14400
6706mm	240413–11508	240413–14400
7010mm	240413–12708	240413–14400
7315mm	240413–13908	240413–14400

Item 12: Center Rail Wide 203–305mm		
Length	Part Number	
610mm	240414–00998	
914mm	240414–02198	
1219mm	240414–03398	
1524mm	240414–04598	
1829mm	240414–05798	
2134mm	240414–06998	
2438mm	240414–08198	
2743mm	240414–09398	
3048mm	240414–10598	
3353mm	240414–11798	
3658mm	240414–12998	
3962mm	240414–06998	240414–06700
4267mm	240414–08198	240414–06700
4572mm	240414–09398	240414–06700
4877mm	240414–10598	240414–06700
5182mm	240414–11798	240414–06700
5486mm	240414–12998	240414–06700
5791mm	240414–06998	240414–14400
6096mm	240414–08198	240414–14400
6401mm	240414–09398	240414–14400
6706mm	240414–10598	240414–14400
7010mm	240414–11798	240414–14400
7315mm	240414–12998	240414–14400

Item 13: Bed Plate		
Length	Part Number	
610mm	2405WW–01904	
914mm	2405WW–03104	
1219mm	2405WW–04304	
1524mm	2405WW–05504	
1829mm	2405WW–06704	
2134mm	2405WW–07904	
2438mm	2405WW–09104	
2743mm	2405WW–10394	
3048mm	2405WW–11504	
3353mm	2405WW–12704	
3658mm	2405WW–13904	
3962mm	2405WW–07904	2405WW–07196
4267mm	2405WW–09104	2405WW–07196
4572mm	2405WW–10304	2405WW–07196
4877mm	2405WW–11504	2405WW–07196
5182mm	2405WW–12704	2405WW–07196
5486mm	2405WW–13904	2405WW–07196
5791mm	2405WW–07908	2405WW–14396
6096mm	2405WW–09108	2405WW–14396
6401mm	2405WW–10308	2405WW–14396
6706mm	2405WW–11508	2405WW–14396
7010mm	2405WW–12708	2405WW–14396
7315mm	2405WW–13908	2405WW–14396
WW = Conveyor Width reference: 08, 10, 12		

Service Parts

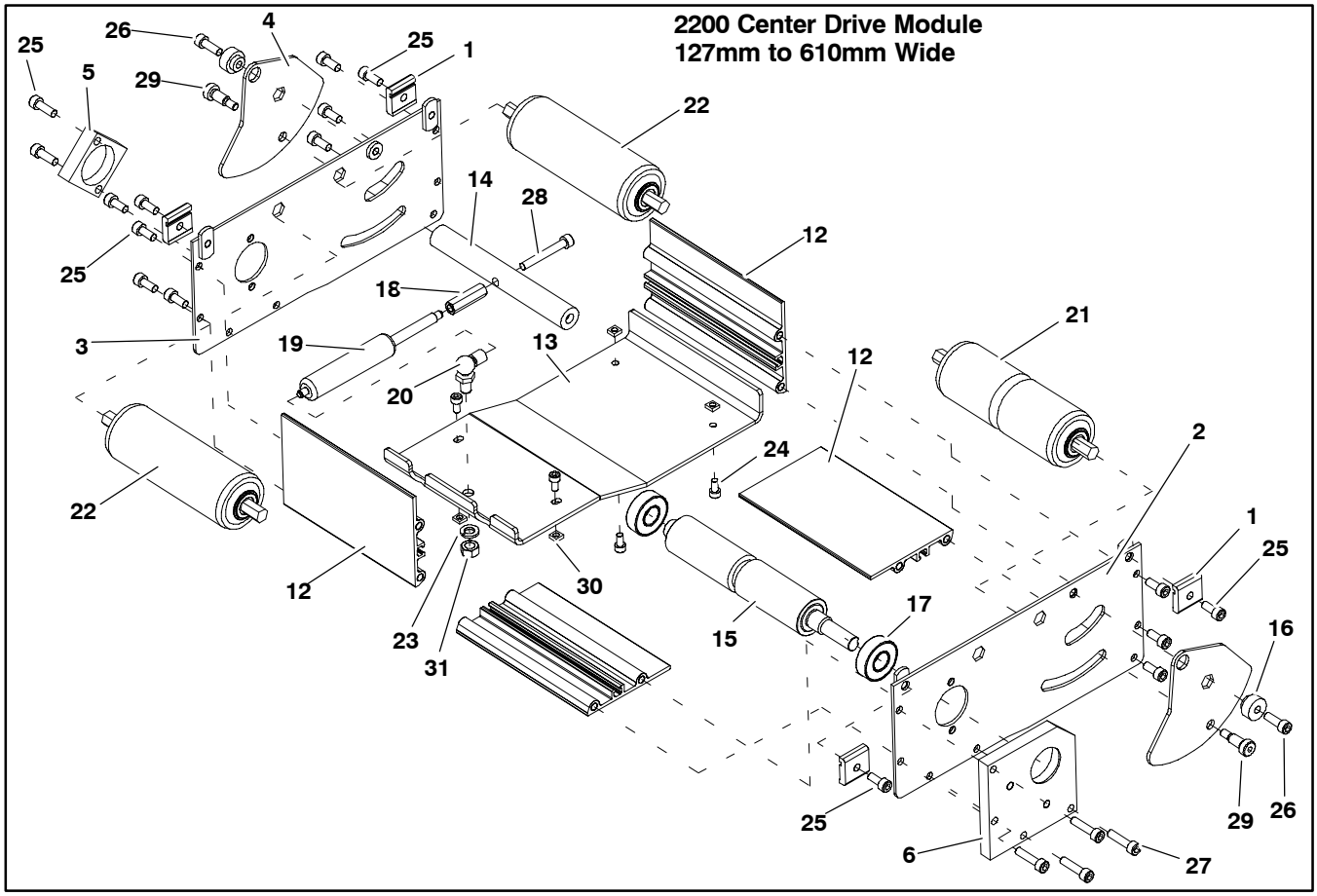

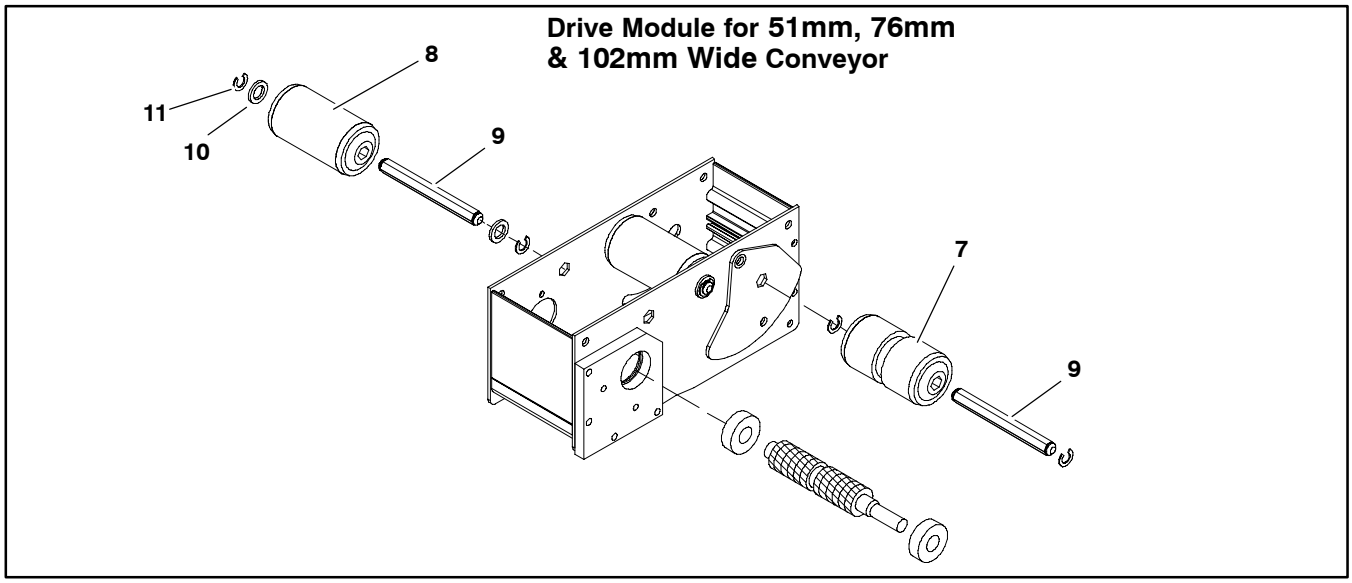

Item	Part Number	Description
1	204566	Module Mounting Clip
2	202633M	Side Plate LH
3	202634M	Side Plate RH
4	463026	Pivot Tension Plate
5	463028M	Bearing Mounting Block
6	463029M	Bearing–Drive Mounting Plate

7	463044	Roller 51mm .44hex Grv 51mm
	463045	Roller 51mm .44hex Grv 76mm
	807–1001	Roller 51mm .44hex Grv 102mm
8	463046	Roller 51mm .44hex SS Flat 51mm
	807–1007	Roller 51mm .44hex SS Flat 76mm
	807–1008	Roller 51mm .44hex SS Flat 102mm

9	915-215	E-Ring Clip (0.44 diameter)
10	801-115	Washer
11	463402	Pulley Shaft 51mm
	463403	Pulley Shaft 76mm
	463404	Pulley Shaft 102mm
12	463802	Center Drive Rail 51mm
	463803	Center Drive Rail 76mm
	463804	Center Drive Rail 102mm
	463805	Center Drive Rail 127mm
	463806	Center Drive Rail 152mm
	463808	Center Drive Rail 203mm
	463810	Center Drive Rail 254mm
	463812	Center Drive Rail 305mm
	463818	Center Drive Rail 457mm
	463821	Center Drive Rail 533mm
	463824	Center Drive Rail 610mm
13	463202M	Center Dr Bottom Cover 51mm
	463203M	Center Dr Bottom Cover 76mm
	463204M	Center Dr Bottom Cover 102mm
	463205M	Center Dr Bottom Cover 127mm
	463206M	Center Dr Bottom Cover 152mm
	463208M	Center Dr Bottom Cover 203mm
	463210M	Center Dr Bottom Cover 254mm
	463212M	Center Dr Bottom Cover 305mm
	463218M	Center Dr Bottom Cover 457mm
	463205M 463208M 163208M	Center Dr Bottom Cover 533mm
	463212M 463212M	Center Dr Bottom Cover 610mm
14	463302M	Center Dr Tensioning Rod 51mm
	463303M	Center Dr Tensioning Rod 76mm
	463304M	Center Dr Tensioning Rod 102mm
	463305M	Center Dr Tensioning Rod 127mm
	463306M	Center Dr Tensioning Rod 152mm
	463308M	Center Dr Tensioning Rod 203mm
	463310M	Center Dr Tensioning Rod 254mm
	463312M	Center Dr Tensioning Rod 305mm
	463318M	Center Dr Tensioning Rod 457mm
	463321M	Center Dr Tensioning Rod 533mm)
	463324M	Center Dr Tensioning Rod 610mm
15	463702M	Center Drive Spindle 51mm
	463703M	Center Drive Spindle 76mm
	463704M	Center Drive Spindle 102mm
	463705M	Center Drive Spindle 127mm

	463706M	Center Drive Spindle 152mm
	463708M	Center Drive Spindle 203mm
	463710M	Center Drive Spindlel 254mm
	463712M	Center Drive Spindlel 305mm
	463718M	Center Drive Spindle 457mm
	463721M	Center Drive Spindle 533mm
	463724M	Center Drive Spindle 610mm
16	801–117	Nylon Bushing
17	802–124	Ball Bearing
18	807–983	Hex Standoff 13mm x 35mm LG M6
19	807–1040	Gas Spring 8mm DIA x 1.97 ST 51mm Wide
	807–986	Gas Spring 8mm DIA x 1.97 ST 76mm Wide
	807–985	Gas Spring 8mm DIA x 1.97 ST 102–152mm Wide
	807–984	Gas Spring 8mm DIA x 1.97 ST 203–305mm Wide
	807–985 807–985	Gas Spring 8mm DIA x 1.97 ST 457–610mm Wide
20	807–987	Steel Ball Joint M6 x M8
21	807–1002	Roller 1.9” .44 Hex Grv 127mm
	807–1003	Roller 1.9” .44 Hex Grv 152mm
	807–1004	Roller 1.9” .44 Hex Grv 203mm
	807–1005	Roller 1.9” .44 Hex Grv 203mm
	807–1006	Roller 1.9” .44 Hex Grv 305mm
	807–1091	Roller 1.9” .44 Hex Grv 457mm
	807–1092	Roller 1.9” .44 Hex Grv 533mm
	807–1093	Roller 1.9” .44 Hex Grv 610mm
22	807–1009	Roller 1.9” .44 Hex Flat 51mm
	807–1010	Roller 1.9” .44 Hex Flat 152mm
	807–1011	Roller 1.9” .44 Hex Flat 203mm
	807–1012	Roller 1.9” .44 Hex Flat 203mm
	807–1013	Roller 1.9” .44 Hex Flat 305mm
	807–1088	Roller 1.9” .44 Hex Flat 457mm
	807–1089	Roller 1.9” .44 Hex Flat 533mm
	807–1090	Roller 1.9” .44 Hex Flat 610mm
23	911–120	Spring Lock Washer
24	920510M	Socket Head Screw M5 x 10mm
25	920614M	Socket Head Screw M6 x 14mm
26	920618M	Socket Head Screw M6 x 18mm
27	920625M	Socket Head Screw M6 x 25mm
28	920625M	Socket Head Screw M6 x 25mm
29	940812M	SHLD Screw 8mm DIA x 12mm
30	990503M	hex Nut, Full M5 – .8
31	990801M	Hex Nut, Full M8 – 1.25

Nosebar End Assembly 51mm to 610mm Wide

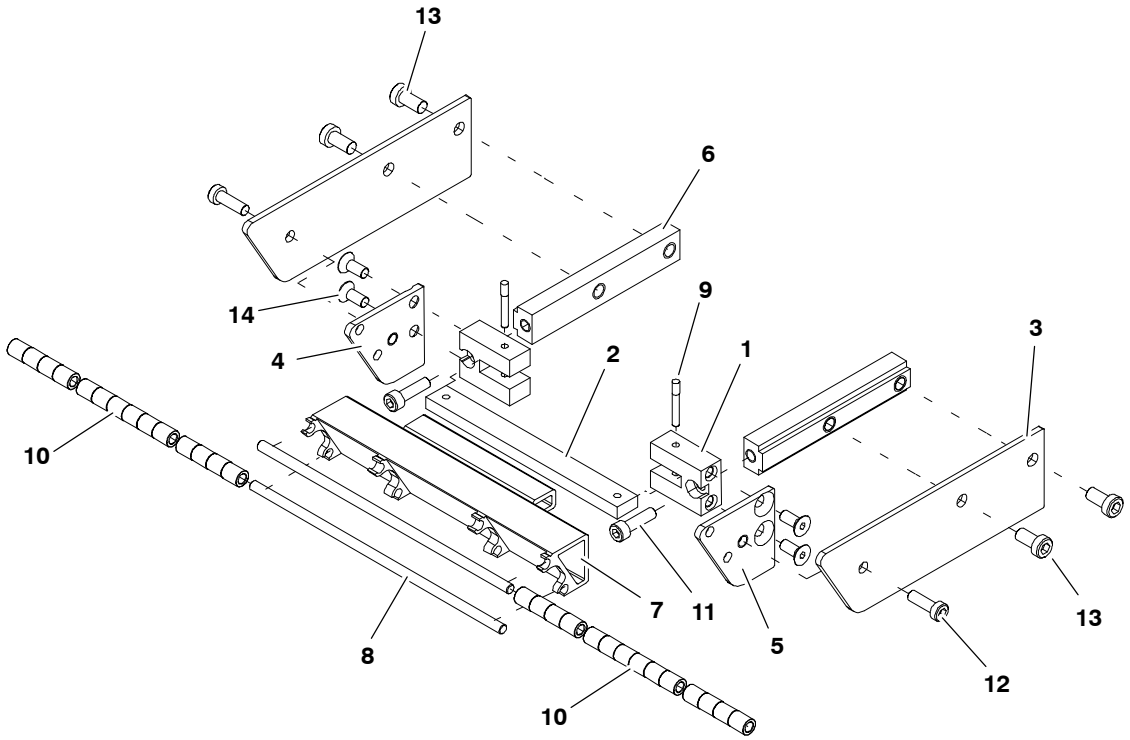

Item	Part Number	Description
1	201965	Mounting Block, PLT Spindle
2	207602	Flex–Link Bar 51mm
	207603	Flex–Link Bar 76mm
	207604	Flex–Link Bar 102mm
	207605	Flex–Link Bar 127mm
	207606	Flex–Link Bar 152mm
	207608	Flex–Link Bar 203mm
	207610	Flex–Link Bar 254mm
	207612	Flex–Link Bar 305mm
	207618	Flex–Link Bar 457mm
	207621	Flex–Link Bar 533mm
	207624	Flex–Link Bar 610mm
3	241125	Outer Side Plate
4	241126	Inner Side Plate LH
5	241127	Inner Side Plate RH
6	241128	Head Plate Bar
7	241202	Nosebar 51mm
	241203	Nosebar 76mm
	241204	Nosebar 102mm
	241205	Nosebar 127mm
	241206	Nosebar 152mm
	241208	Nosebar 203mm

	241210	Nosebar 254mm
	241212	Nosebar 305mm
	241218	Nosebar 457mm
	241221	Nosebar 533mm
	241224	Nosebar 610mm
8	241302	Nosebar Rod 51mm
	241303	Nosebar Rod 76mm
	241304	Nosebar Rod 102mm
	241305	Nosebar Rod 127mm
	241306	Nosebar Rod 152mm
	241308	Nosebar Rod 203mm
	241310	Nosebar Rod 254mm
	241312	Nosebar Rod 305mm
	241318	Nosebar Rod 457mm
	241321	Nosebar Rod 533mm
	241324	Nosebar Rod 610mm
9	200695P	Knurl Pin .125” DIA x .937” Lg
10	801–122	Nose Bar Roller
11	920518M	Socket Head Screw M5 x 18mm
12	920593M	Socket Head Screw M5 x 16mm
13	920692M	Socket Head Screw M6 x 12mm
14	930512M	Flat Head Screw M5 x 12mm

–04 76mm Aluminum Side

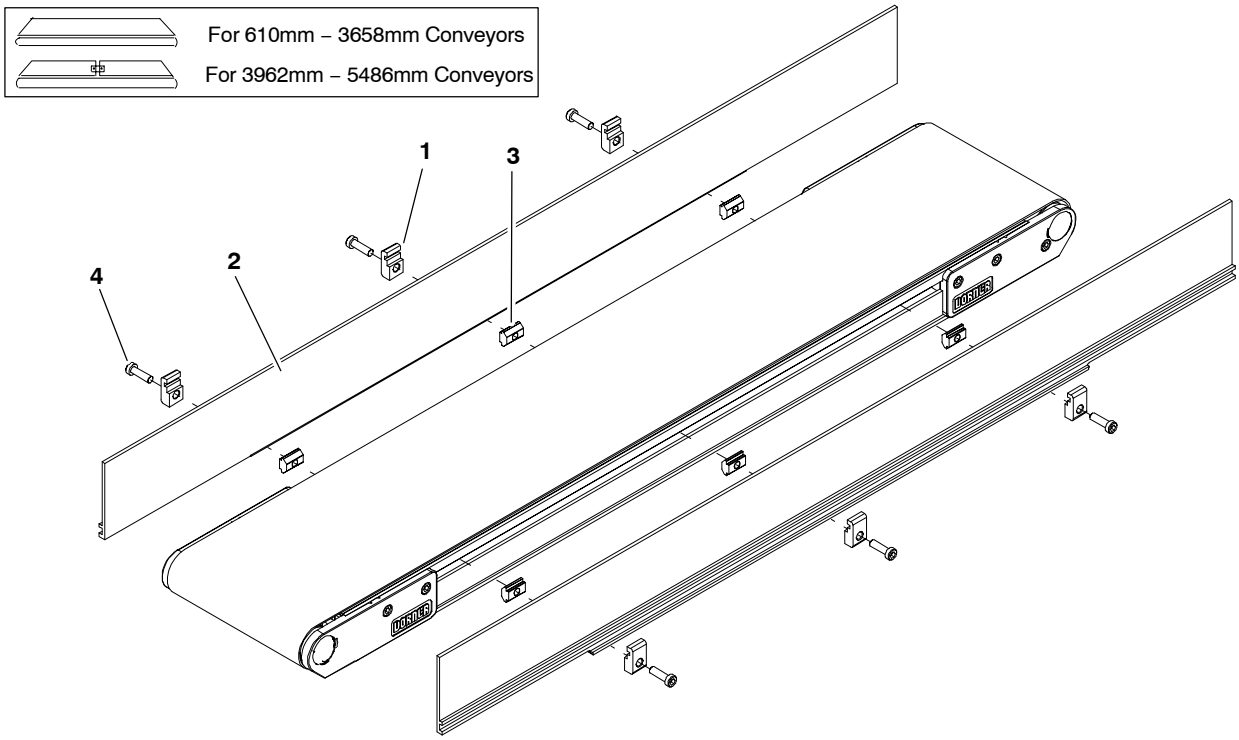

Item	Part Number	Description
1	200121	Guide Retaining Clip
2	See Chart Below	2200 Guide 76mm HS
3	200695P	Single Drop–in Tee Bar
4	920694M	Socket Head Screw M6 x 20mm

Item 2: 2200 Guide 76mm HS			
Length		End Guide	End Guide
610mm	Left Hand	280403–02400	N/A
	Right Hand	280403–02400	N/A
914mm	Left Hand	280403–03600	N/A
	Right Hand	280403–03600	N/A
1219mm	Left Hand	280403–04800	N/A
	Right Hand	280403–04800	N/A
1524mm	Left Hand	280403–06000	N/A
	Right Hand	280403–06000	N/A
1829mm	Left Hand	280403–07200	N/A
	Right Hand	280403–07200	N/A
2134mm	Left Hand	280403–08400	N/A
	Right Hand	280403–08400	N/A
2438mm	Left Hand	280403–09600	N/A
	Right Hand	280403–09600	N/A
2743mm	Left Hand	280403–10800	N/A
	Right Hand	280403–10800	N/A
3048mm	Left Hand	280403–12000	N/A
	Right Hand	280403–12000	N/A
3353mm	Left Hand	280403–13200	N/A
	Right Hand	280403–13200	N/A
3658mm	Left Hand	280403–14400	N/A
	Right Hand	280403–14400	N/A
3962mm	Left Hand	280401–07500	280401–08100
	Right Hand	280402–07500	280402–08100
4267mm	Left Hand	280401–07500	280401–09300
	Right Hand	280402–07500	280402–09300
4572mm	Left hand	280401–07500	280401–10500
	Right Hand	280402–07500	280402–10500
4877mm	Left Hand	280401–07500	280401–11700
	Right Hand	280402–07500	280402–11700
5182mm	Left Hand	280401–07500	280401–12900
	Right Hand	280402–07500	280402–12900
5486mm	Left Hand	280401–07500	280401–14100
	Right Hand	280402–07500	280402–14100
5791mm	Left Hand	280401–08100	280401–14700
	Right Hand	280402–08100	280402–14700
6096mm	Left Hand	280401–09300	280401–14700
	Right Hand	280402–09300	280402–14700
6401mm	Left Hand	280401–10500	280401–14700
	Right Hand	280402–10500	280402–14700
6706mm	Left Hand	280401–11700	280401–14700
	Right Hand	280402–11700	280402–14700
7010mm	Left Hand	280401–12900	280401–14700
	Right Hand	280402–12900	280402–14700
7315mm	Left Hand	280401–14100	280401–14700
	Right Hand	280402–14100	280402–14700

–05 38mm Aluminum Side

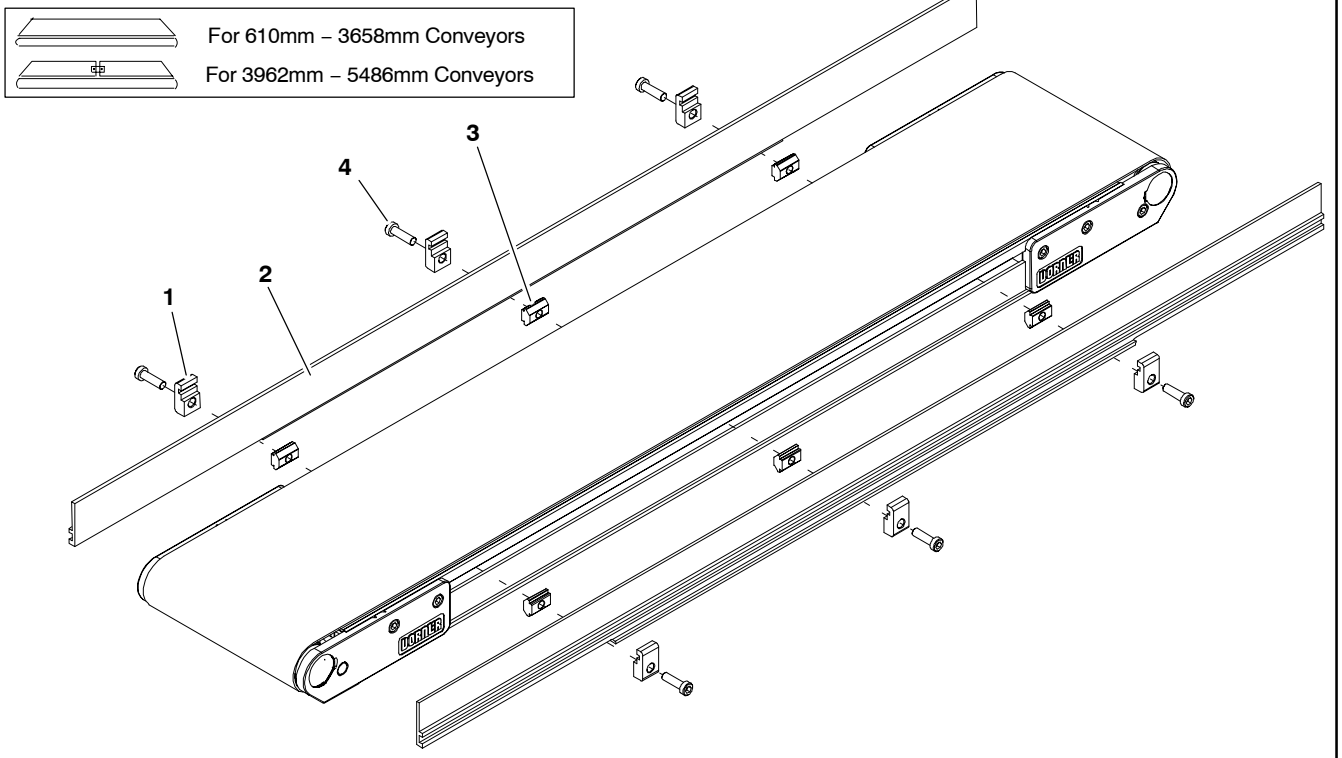

Item	Part Number	Description
1	200121	Guide Retaining Clip
2	See Chart Below	2200 Guide 13mm HS
3	639971M	Single Drop–in Tee Bar
4	920694M	Socket Head Screw M6 x 20mm

Item 2: 2200 Guide 13mm HS			
Length		End Guide	End Guide
610mm	Left Hand	280503–02400	N/A
	Right Hand	280503–02400	N/A
914mm	Left Hand	280503–03600	N/A
	Right Hand	280503–03600	N/A
1219mm	Left Hand	280503–04800	N/A
	Right Hand	280503–04800	N/A
1524mm	Left Hand	280503–06000	N/A
	Right Hand	280503–06000	N/A
1829mm	Left Hand	280503–07200	N/A
	Right Hand	280503–07200	N/A
2134mm	Left Hand	280503–08400	N/A
	Right Hand	280503–08400	N/A
2438mm	Left Hand	280503–09600	N/A
	Right Hand	280503–09600	N/A
2743mm	Left Hand	280503–10800	N/A
	Right Hand	280503–10800	N/A
3048mm	Left Hand	280503–12000	N/A
	Right Hand	280503–12000	N/A
3353mm	Left Hand	280503–13200	N/A
	Right Hand	280503–13200	N/A
3658mm	Left Hand	280503–14400	N/A
	Right Hand	280503–14400	N/A
3962mm	Left Hand	280501–07500	280501–08100
	Right Hand	280502–07500	280502–08100
4267mm	Left Hand	280501–07500	280501–09300
	Right Hand	280502–07500	280502–09300
4572mm	Left hand	280501–07500	280501–10500
	Right Hand	280502–07500	280502–10500
4877mm	Left Hand	280501–07500	280501–11700
	Right Hand	280502–07500	280502–11700
5182mm	Left Hand	280501–07500	280501–12900
	Right Hand	280502–07500	280502–12900
5486mm	Left Hand	280501–07500	280501–14100
	Right Hand	280502–07500	280502–14100
5791mm	Left Hand	280501–08100	280501–14700
	Right Hand	280502–08100	280502–14700
6096mm	Left Hand	280501–09300	280501–14700
	Right Hand	280502–09300	280502–14700
6401mm	Left Hand	280501–10500	280501–14700
	Right Hand	280502–10500	280502–14700
6706mm	Left Hand	280501–11700	280501–14700
	Right Hand	280502–11700	280502–14700
7010mm	Left Hand	280501–12900	280501–14700
	Right Hand	280502–12900	280502–14700
7315mm	Left Hand	280501–14100	280501–14700
	Right Hand	280502–14100	280502–14700

–07 Low to Side Wiper

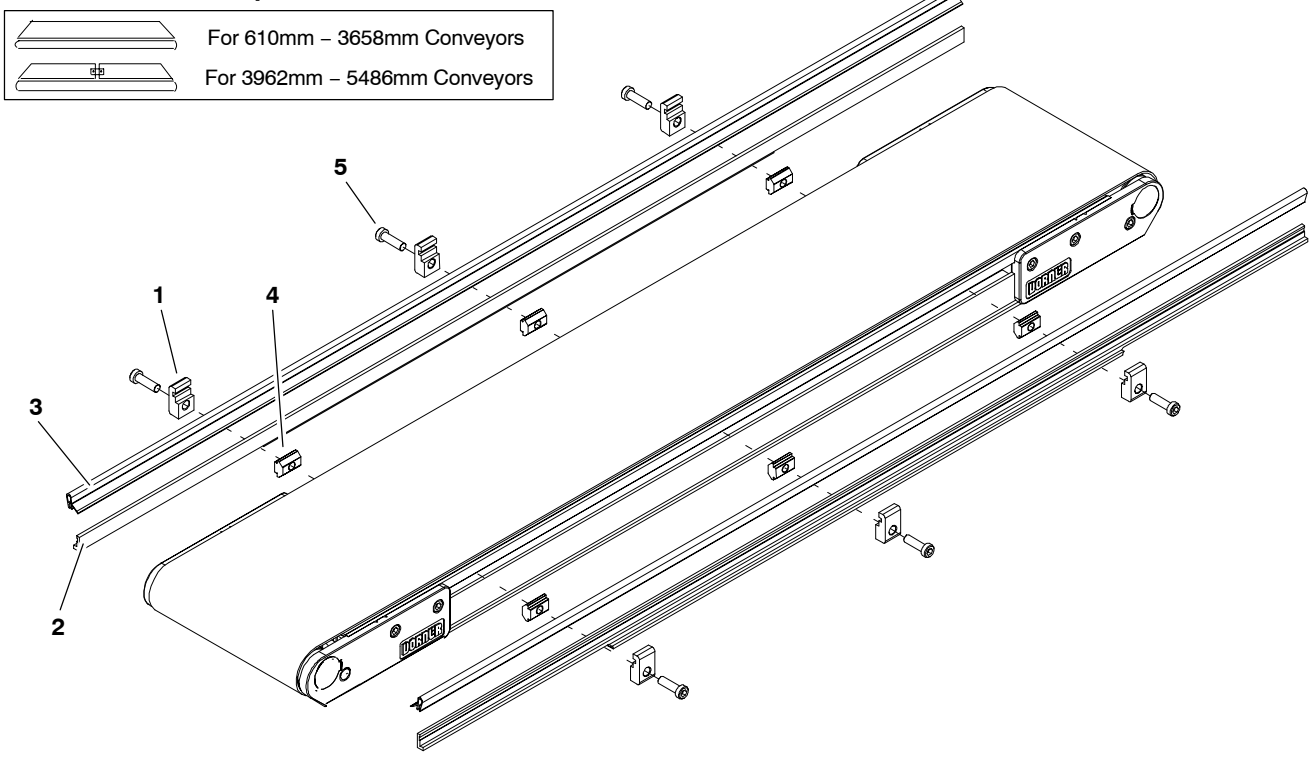

Item	Part Number	Description
1	200121	Guide Retaining Clip
2	See Chart Below	2200 Guide 13mm HS
3	41–00–24	Side Wiper Nylatron (per foot)
4	639971M	Single Drop–in Tee Bar
5	920694M	Socket Head Screw M6 x 20mm

Item 2: 2200 Guide 13mm HS			
Length		End Guide	End Guide
610mm	Left Hand	280903–02400	N/A
	Right Hand	280903–02400	N/A
914mm	Left Hand	280903–03600	N/A
	Right Hand	280903–03600	N/A
1219mm	Left Hand	280903–04800	N/A
	Right Hand	280903–04800	N/A
1524mm	Left Hand	280903–06000	N/A
	Right Hand	280903–06000	N/A
1829mm	Left Hand	280903–07200	N/A
	Right Hand	280903–07200	N/A
2134mm	Left Hand	280903–08400	N/A
	Right Hand	280903–08400	N/A
2438mm	Left Hand	280903–09600	N/A
	Right Hand	280903–09600	N/A
2743mm	Left Hand	280903–10800	N/A
	Right Hand	280903–10800	N/A
3048mm	Left Hand	280903–12000	N/A
	Right Hand	280903–12000	N/A
3353mm	Left Hand	280903–13200	N/A
	Right Hand	280903–13200	N/A
3658mm	Left Hand	280903–14400	N/A
	Right Hand	280903–14400	N/A
3962mm	Left Hand	280901–07500	280901–08100
	Right Hand	280902–07500	280902–08100
4267mm	Left Hand	280901–07500	280901–09300
	Right Hand	280902–07500	280902–09300
4572mm	Left hand	280901–07500	280901–10500
	Right Hand	280902–07500	280902–10500
4877mm	Left Hand	280901–07500	280901–11700
	Right Hand	280902–07500	280902–11700
5182mm	Left Hand	280901–07500	280901–12900
	Right Hand	280902–07500	280902–12900
5486mm	Left Hand	280901–07500	280901–14100
	Right Hand	280902–07500	280902–14100
5791mm	Left Hand	280901–08100	280901–14700
	Right Hand	280902–08100	280902–14700
6096mm	Left Hand	280901–09300	280901–14700
	Right Hand	280902–09300	280902–14700
6401mm	Left Hand	280901–10500	280901–14700
	Right Hand	280902–10500	280902–14700
6706mm	Left Hand	280901–11700	280901–14700
	Right Hand	280902–11700	280902–14700
7010mm	Left Hand	280901–12900	280901–14700
	Right Hand	280902–12900	280902–14700
7315mm	Left Hand	280901–14100	280901–14700
	Right Hand	280902–14100	280902–14700

–09 Low to High Side

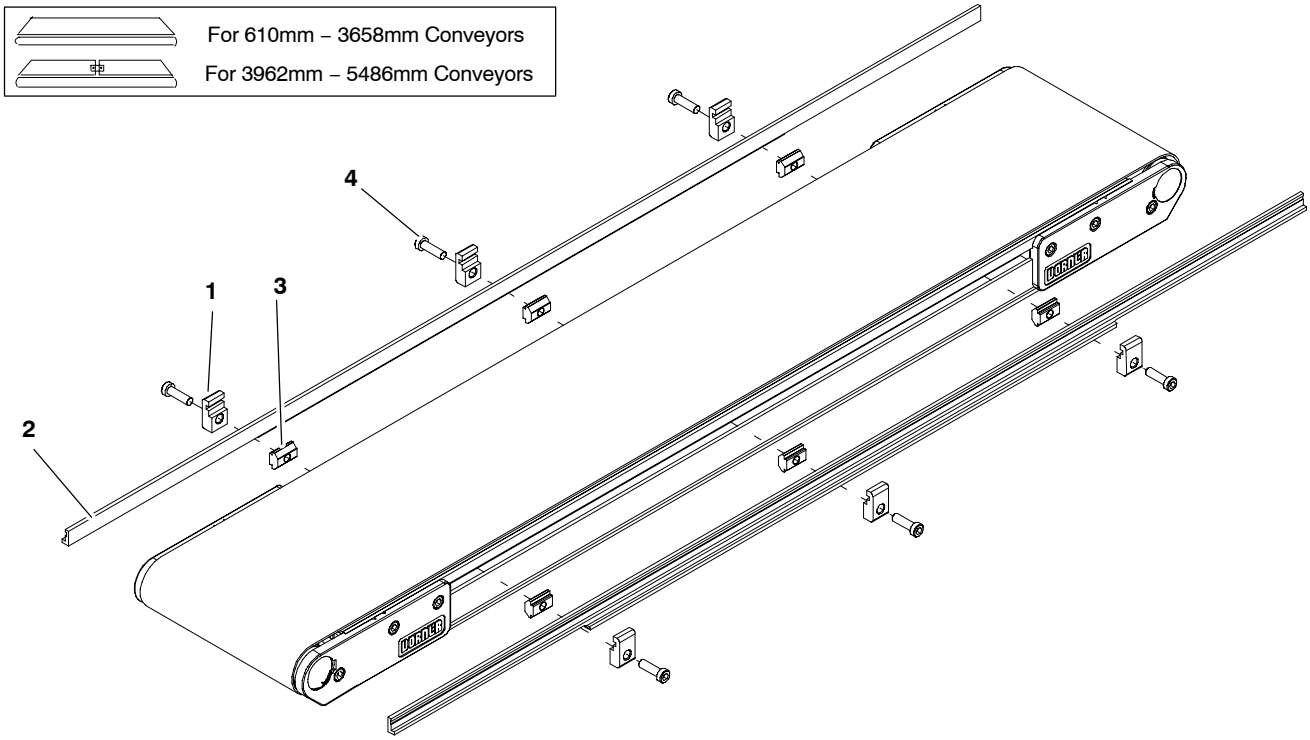

Item	Part Number	Description
1	200121	Guide Retaining Clip
2	See Chart Below	2200 Guide 13mm HS
3	639971M	Single Drop–in Tee Bar
4	920694M	Socket Head Screw M6 x 20mm

Item 2: 2200 Guide 13mm HS			
Length		End Guide	End Guide
610mm	Left Hand	280903–02400	N/A
	Right Hand	280903–02400	N/A
914mm	Left Hand	280903–03600	N/A
	Right Hand	280903–03600	N/A
1219mm	Left Hand	280903–04800	N/A
	Right Hand	280903–04800	N/A
1524mm	Left Hand	280903–06000	N/A
	Right Hand	280903–06000	N/A
1829mm	Left Hand	280903–07200	N/A
	Right Hand	280903–07200	N/A
2134mm	Left Hand	280903–08400	N/A
	Right Hand	280903–08400	N/A
2438mm	Left Hand	280903–09600	N/A
	Right Hand	280903–09600	N/A
2743mm	Left Hand	280903–10800	N/A
	Right Hand	280903–10800	N/A
3048mm	Left Hand	280903–12000	N/A
	Right Hand	280903–12000	N/A
3353mm	Left Hand	280903–13200	N/A
	Right Hand	280903–13200	N/A
3658mm	Left Hand	280903–14400	N/A
	Right Hand	280903–14400	N/A
3962mm	Left Hand	280901–07500	280901–08100
	Right Hand	280902–07500	280902–08100
4267mm	Left Hand	280901–07500	280901–09300
	Right Hand	280902–07500	280902–09300
4572mm	Left hand	280901–07500	280901–10500
	Right Hand	280902–07500	280902–10500
4877mm	Left Hand	280901–07500	280901–11700
	Right Hand	280902–07500	280902–11700
5182mm	Left Hand	280901–07500	280901–12900
	Right Hand	280902–07500	280902–12900
5486mm	Left Hand	280901–07500	280901–14100
	Right Hand	280902–07500	280902–14100
5791mm	Left Hand	280901–08100	280901–14700
	Right Hand	280902–08100	280902–14700
6096mm	Left Hand	280901–09300	280901–14700
	Right Hand	280902–09300	280902–14700
6401mm	Left Hand	280901–10500	280901–14700
	Right Hand	280902–10500	280902–14700
6706mm	Left Hand	280901–11700	280901–14700
	Right Hand	280902–11700	280902–14700
7010mm	Left Hand	280901–12900	280901–14700
	Right Hand	280902–12900	280902–14700
7315mm	Left Hand	280901–14100	280901–14700
	Right Hand	280902–14100	280902–14700

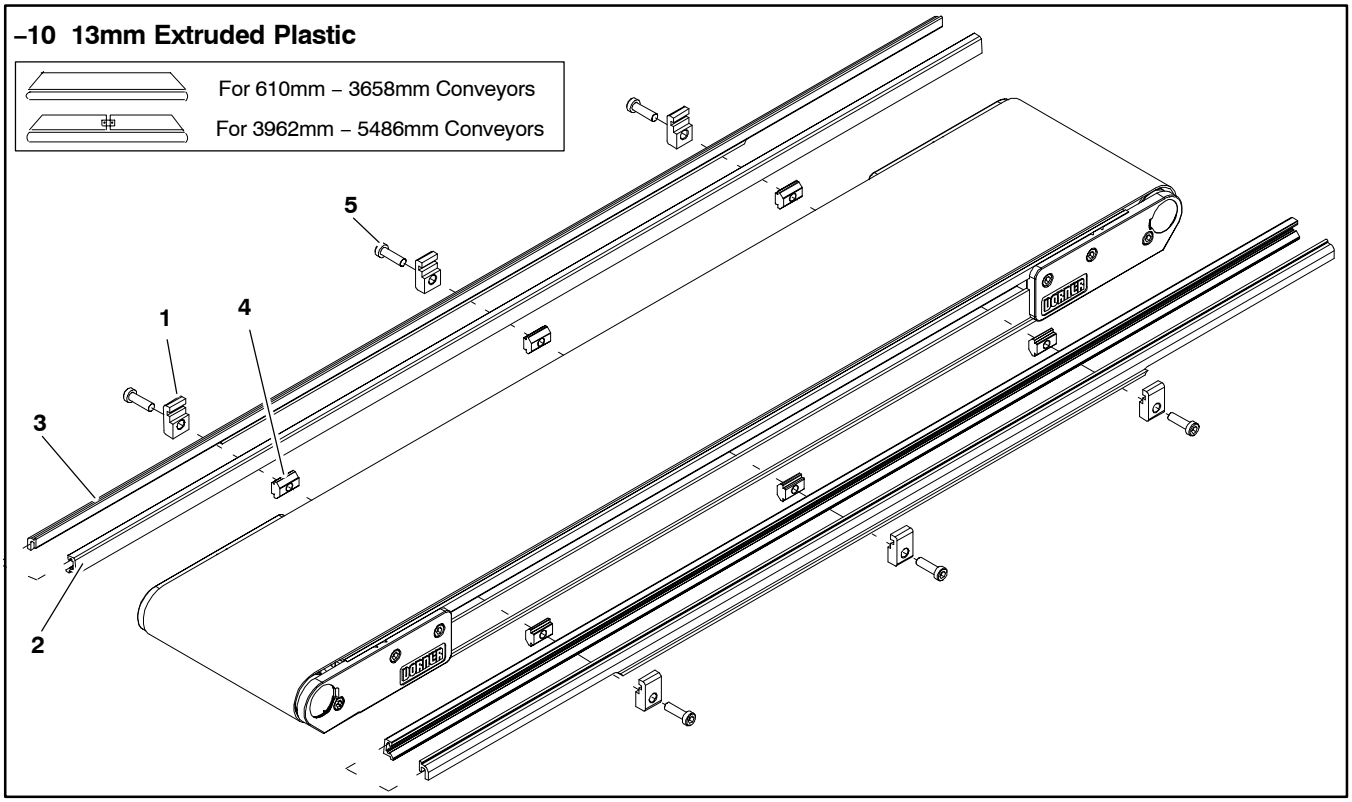

Item	Part Number	Description
1	200121	Guide Retaining Clip
2	200054P	Snap–On Guide (per foot)
3	See Chart Below	2200 Guide
4	639971M	Single Drop–in Tee Bar
5	920694M	Socket Head Screw M6 x 20mm

Item 3: 2200 Guide			
Length		End Guide	End Guide
610mm	Left Hand	281003–02400	N/A
	Right Hand	281003–02400	N/A
914mm	Left Hand	281003–03600	N/A
	Right Hand	281003–03600	N/A
1219mm	Left Hand	281003–04800	N/A
	Right Hand	281003–04800	N/A
1524mm	Left Hand	281003–06000	N/A
	Right Hand	281003–06000	N/A
1829mm	Left Hand	281003–07200	N/A
	Right Hand	281003–07200	N/A
2134mm	Left Hand	281003–08400	N/A
	Right Hand	281003–08400	N/A
2438mm	Left Hand	281003–09600	N/A
	Right Hand	281003–09600	N/A
2743mm	Left Hand	281003–10800	N/A
	Right Hand	281003–10800	N/A
3048mm	Left Hand	281003–12000	N/A
	Right Hand	281003–12000	N/A
3353mm	Left Hand	281003–13200	N/A
	Right Hand	281003–13200	N/A
3658mm	Left Hand	281003–14400	N/A
	Right Hand	281003–14400	N/A
3962mm	Left Hand	281001–07500	281001–08100
	Right Hand	281002–07500	281002–08100
4267mm	Left Hand	281001–07500	281001–09300
	Right Hand	281002–07500	281002–09300
4572mm	Left hand	281001–07500	281001–10500
	Right Hand	281002–07500	281002–10500
4877mm	Left Hand	281001–07500	281001–11700
	Right Hand	281002–07500	281002–11700
5182mm	Left Hand	281001–07500	281001–12900
	Right Hand	281002–07500	281002–12900
5486mm	Left Hand	281001–07500	281001–14100
	Right Hand	281002–07500	281002–14100
5791mm	Left Hand	281001–08100	281001–14700
	Right Hand	281002–08100	281002–14700
6096mm	Left Hand	281001–09300	281001–14700
	Right Hand	281002–09300	281002–14700
6401mm	Left Hand	281001–10500	281001–14700
	Right Hand	281002–10500	281002–14700
6706mm	Left Hand	281001–11700	281001–14700
	Right Hand	281002–11700	281002–14700
7010mm	Left Hand	281001–12900	281001–14700
	Right Hand	281002–12900	281002–14700
7315mm	Left Hand	281001–14100	281001–14700
	Right Hand	281002–14100	281002–14700

–13 Adjustable Guiding

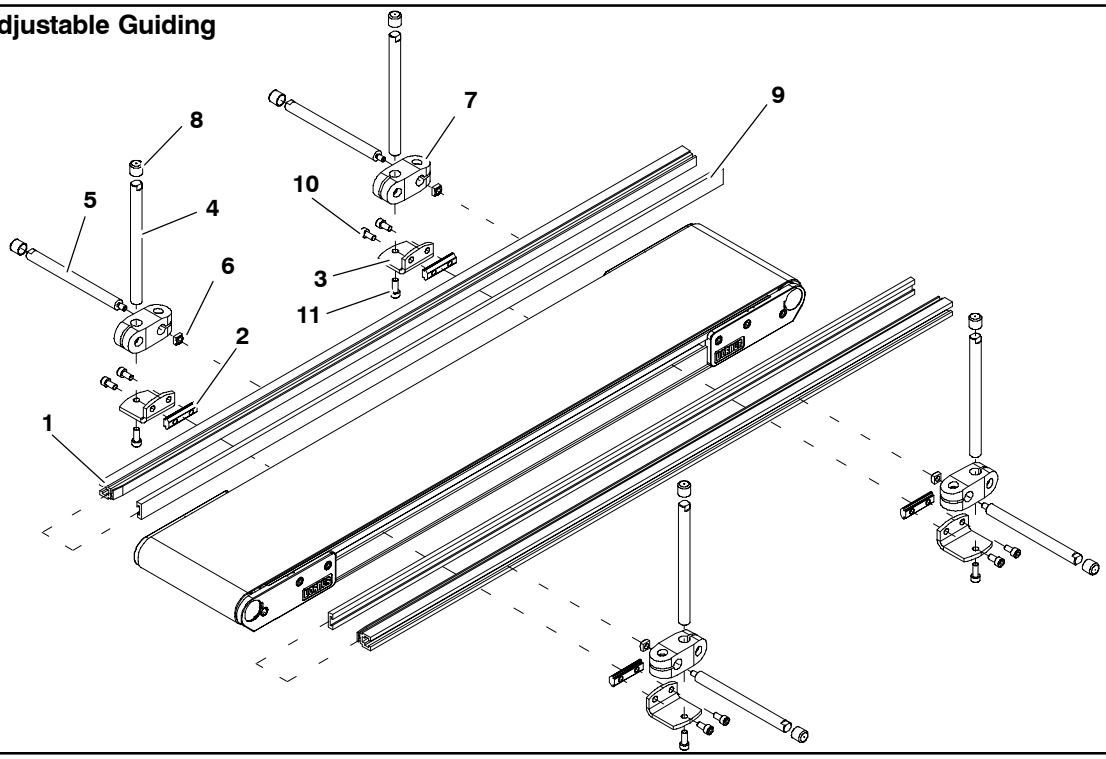

Item	Part Number	Description
1	202983	Aluminum Profile Guide 610mm
	202984	Aluminum Profile Guide 914mm
	202985	Aluminum Profile Guide 1219mm
	202986	Aluminum Profile Guide 1524mm
	202987	Aluminum Profile Guide 1829mm
	202988	Aluminum Profile Guide 2134mm
	202989	Aluminum Profile Guide 2438mm
	202990	Aluminum Profile Guide 2743mm
	202991	Aluminum Profile Guide 3048mm
	202992	Aluminum Profile Guide 3353mm
	202993	Aluminum Profile Guide 3658mm
	202994	Aluminum Profile Guide 3962mm

2	200830M	Drop–In Tee Bar
3	202004	Mounting Bracket
4	202027M	Guide Mounting Shaft Vertical
5	202028M	Guide Moutning Shaft Horizontal
6	674175MP	Square Nut
7	807–652	Cross Block
8	807–948	Vinyl Shaft Cap
9	614068P	Flat Extruded Guide (per foot)
10	920612M	Socket Head Screw M6 x 12mm
11	920616M	Socket Head Screw M6 x 16mm

Flared Side Guiding

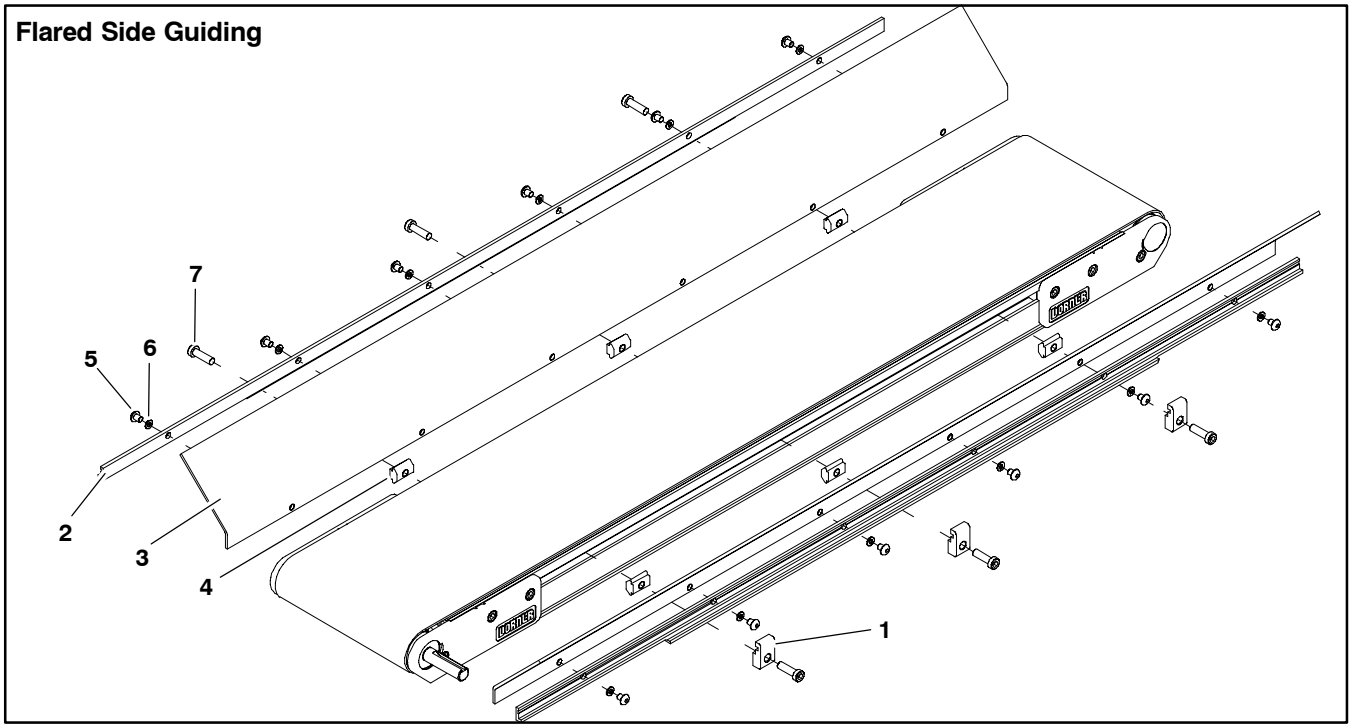

Item	Part Number	Description
1	200121	Guide Retaining Clip
2	202212	Side–Flare Mounting Guide 610mm
	202213	Side–Flare Mounting Guide 914mm
	202214	Side–Flare Mounting Guide 1219mm
	202215	Side–Flare Mounting Guide 1524mm
	202216	Side–Flare Mounting Guide 1829mm
3	202522M	Flared Guide 45° 610mm
	202523M	Flared Guide 45° 914mm
	202523M	Flared Guide 45° 219mm
	202523M	Flared Guide 45° 1524mm
	202523M	Flared Guide 45° 1829mm

4	639971	Drop–In Tee Bar
5	910506M	Button Head Screw M5 x 6mm
6	911–512	Washer
7	920694M	Cap Low–Head Screw M6 x 20mm

Flat Belt Mounting Brackets

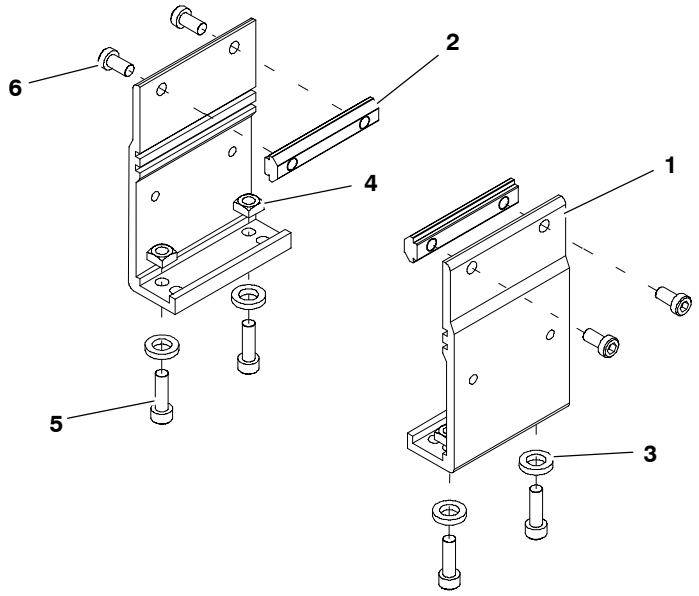

Item	Part Number	Description
1	240831	Stand Mount
2	300150M	Drop–In Tee Bar
3	605279P	Washer
4	807–920	Square Nut M6 5mm x 10mm
5	920620M	Socket Head Screw M6 x 20mm
6	920692M	Socket Head Screw M6 x 12mm

Flat Belt Mounting Brackets for 610mm Conveyors

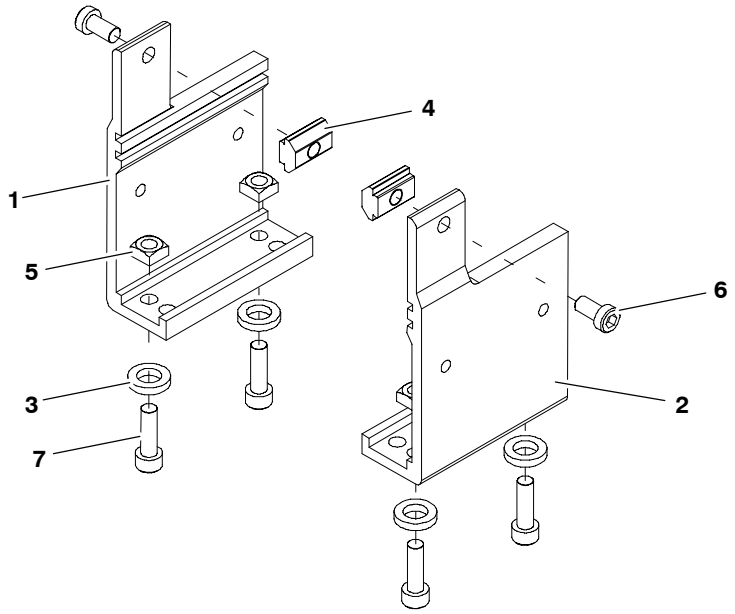

Item	Part Number	Description
1	240833	Stand Mount, LH 610mm
2	240834	Stand Mount, RH 610mm
3	605279P	Washer
4	639971M	Drop–In Tee Bar
5	807–920	Square Nut M6 5mm x 10mm
6	920620M	Socket Head Screw M6 x 20mm
7	920692M	Socket Head Screw M6 x 12mm

Connecting Assembly without Stand Mount

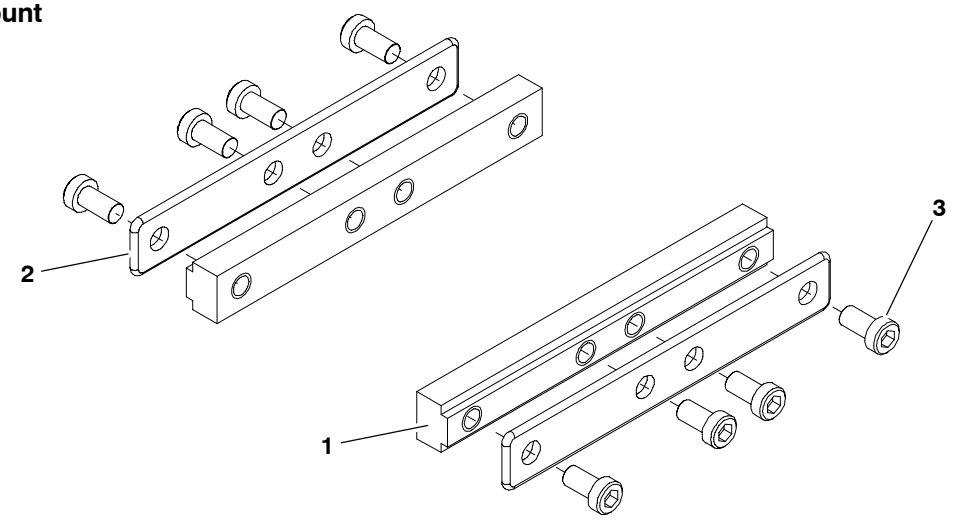

Item	Part Number	Description
1	240331	Frame Bar Connector
2	300153M	Intermediate Clamp Plate
3	920692M	Socket Head Screw M6 x 12mm

Flat Belt Connecting Assembly with Stand Mount

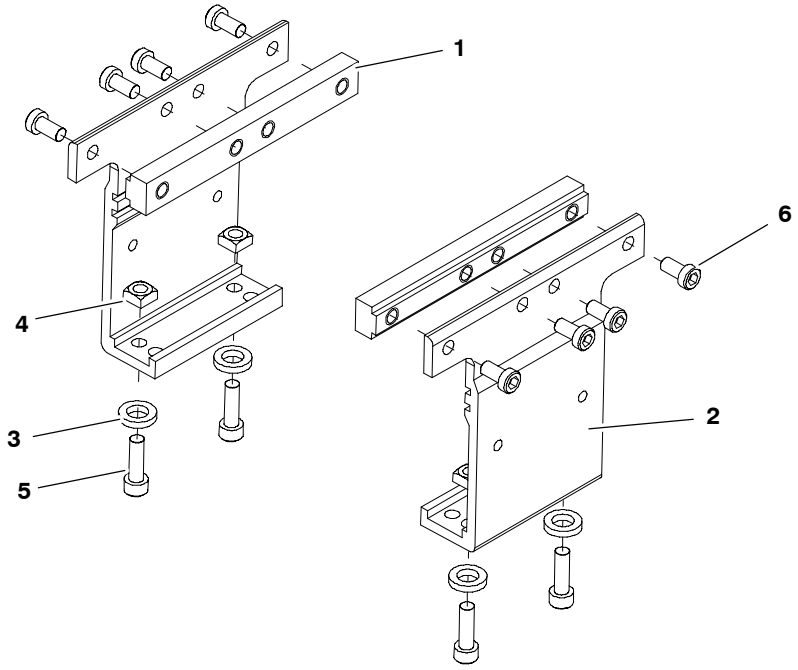

Item	Part Number	Description
1	240331	Frame Connector Bar
2	240837	Stand Mount Joint
3	605279P	Washer
4	807–920	Square Nut M6 5mm x 10mm
5	920620M	Socket Head Screw M6 x 20mm
6	920692M	Socket Head Screw M6 x 12mm

51mm to 152mm Flat Belt Return Roller

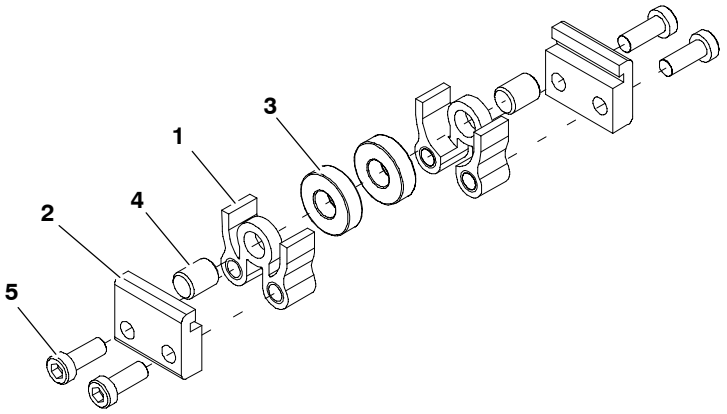

Item	Part Number	Description
1	240825	Short Return Roller Guard
2	240827	Return Roller Clip
3	802–123	Bearing
4	913–100	Dowel Pin
5	920693M	Socket Head Screw M6 x 16mm

203mm to 610mm Flat Belt Return Roller

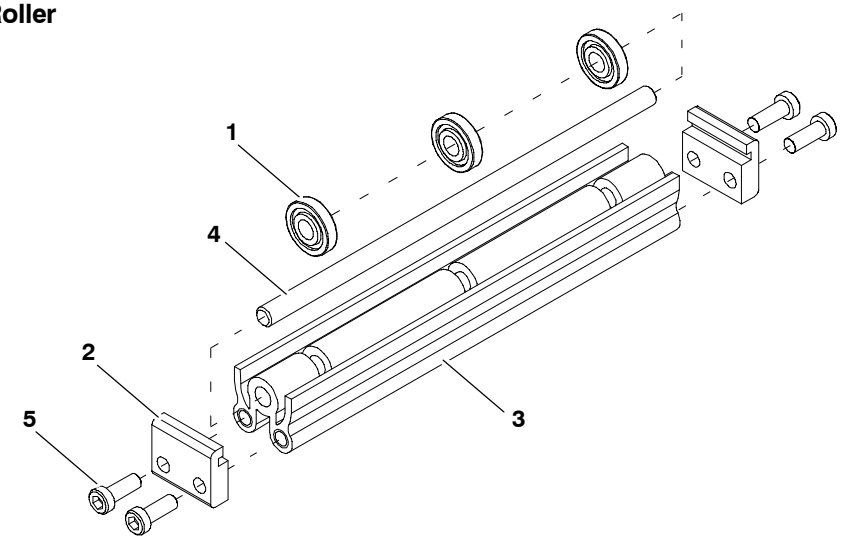

Item	Part Number	Description
1	240826	Return Roller
2	240827	Return Roller Clip
3	240908	Return Roller Guard 203mm
	240910	Return Roller Guard 254mm
	240912	Return Roller Guard 305mm
	240918	Return Roller Guard 457mm
	240921	Return Roller Guard 533mm
	240924	Return Roller Guard 610mm
4	241008	Return Roller Rod 203mm
	241010	Return Roller Rod 254mm
	241012	Return Roller Rod 305mm
	241018	Return Roller Rod 457mm
	241021	Return Roller Rod 533mm
	241024	Return Roller Rod 610mm
5	920693M	Socket Head Screw M6 x 16mm

Conveyor Belt Part Number Configuration

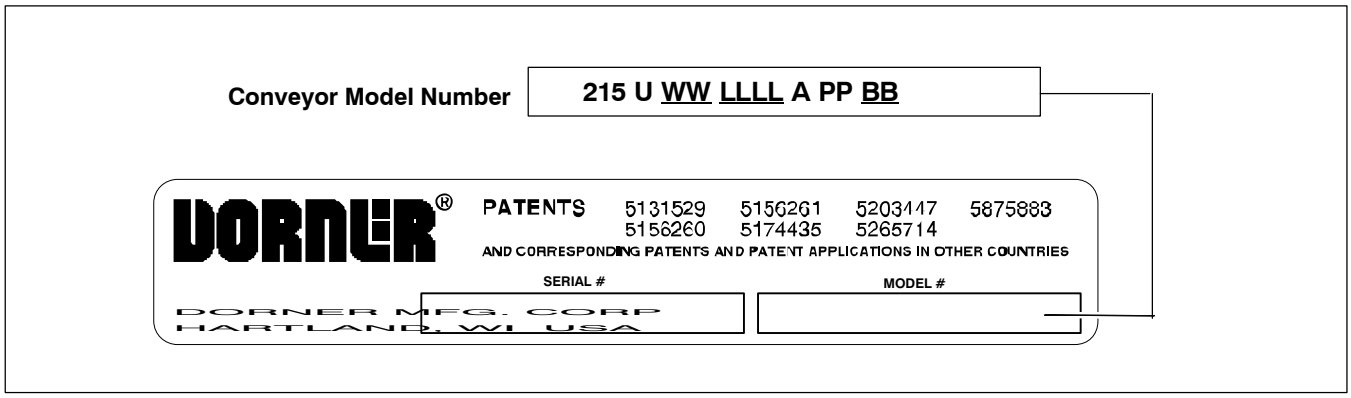

Figure 61

Refer to Dorner patent plate (Figure 61). From the model number, determine conveyor width ("WW"), length ("LLLL") and belt type ("BB"). Use data to configure belt part number as indicated below. *****Add "V" for V-guided belts.

25 - WW LLLL / BB V *

22- ____ _____ / ____ V *
(Fill In)

Return Policy

No returns will be accepted without prior written factory authorization. When calling for authorization, please have the following information ready for the Dorner Factory representative or your local distributor:

1. Name and address of customer.
2. Item(s) being returned.
3. Reason for return.
4. Customer's original order number used when ordering the item(s).
5. Dorner or distributor invoice number.

A representative will discuss action to be taken on the Returned items and provide a Returned Goods Authorization Number to reference.

There will be a 15% restocking charge on all new items returned for credit where Dorner was not at fault. These will not be accepted after 60 days from original invoice date. The restocking charge covers inspection, cleaning, disassembly, and reissuing to inventory.

If a replacement is needed prior to evaluation of returned item, a purchase order must be issued. Credit (if any) is issued only after return and evaluation is complete.

Dorner has representatives throughout the world. Feel free to contact Dorner for the name of your local representative. Our technical sales and service staff will gladly help with your questions on Dorner products.

For a copy of Dorner's Limited Warranty, contact factory, distributor, service center or visit our website at www.dorner.com.

For replacement parts, contact an authorized Dorner Service Center or the factory.

Dorner Mfg. Corp. reserves the right to change or discontinue products without notice. All products and services are covered in accordance with our standard warranty. All rights reserved. ©Dorner Mfg. Corp. 2000

DORNER MFG. CORP.
975 Cottonwood Drive, PO Box 20
Hartland, WI 53029-0020 USA
USA
TEL 1-800-397-8664 (USA)
FAX 1-800-369-2440 (USA)
Internet: www.dorner.com

Outside the USA:
TEL 1-262-367-7600
FAX 1-262-367-5827