Installation, Maintenance & Parts Manual

2200 Series End Drive Conveyors

Table of Contents

Warnings – General Safety 2
Introduction 2
Product Description 3
Specifications 3
Installation 4
RequiredTools 4
Recommended Installation Sequence 5
Conveyors Up to 3962 mm 5
Conveyors Longer Than 3962 mm 5
Mounting Brackets 6
Return Rollers 7
Cleated Belt and 51 – 152 mm Wide Flat Belt Conveyors 7
203 – 610 mm Wide Flat Belt Conveyors 7
Preventative Maintenance & Adjustment 8
Required Tools 8
Standard Tools 8
Special Tools 8
Checklist 8
Lubrication 8
Maintaining Conveyor Belt 8
Troubleshooting 8
Cleaning 8
Conveyor Belt Replacement 8
Conveyor Belt Replacement Sequence 8
Belt Removal for Conveyor Without Stands or Gearmotor Mounting Package 9
Belt Removal for Conveyor With Stands and Gearmotor Mounting Package 9
Belt Installation for Conveyor Without Stands or Gearmotor Mounting Package 10
Belt Installation for Conveyor With Stands and Gearmotor Mounting Package 10
Conveyor Belt Tensioning 11
Conveyors with 32 mm Diameter Pulleys 11
Conveyors with Nose Bar Idlers 12
Conveyor Belt Tracking 12
Pulley Removal 13
A – Idler Pulley Removal 13
B – Drive Pulley Removal 13
Bearing Removal & Replacement 14
Pulley Replacement 15
Drive Pulley 15
Idler Pulley 16
Nose Bar Bearing Replacement 17
Service Parts 19
51mm Conveyor Assembly 19
76mm to 152mm Conveyor Assembly 21
203mm to 605mm Conveyor Assembly 22
457mm to 610mm Conveyor Assembly 24
Nosebar End Assembly 51mm to 610mm 26
–04 76mm Aluminium Side 27
–05 38mm Aluminium Side 28
–07 Low to Side Wiper 29
–09 Low to High Side 30
–10 13mm Extruded Plastic 31
–13 Adjustable Guiding 32
.13mm Cleated Guiding 33
25mm Cleated Guiding 34
51mm Cleated Guiding 35
Flared Side Guiding 36
Flat Belt Mounting Bracket 37
Cleated Belt Mounting Bracket 37
Flat Belt Mounting Brackets for 610mm Conveyors 38
Cleated Belt Mounting Brackets for 610mm Conveyors 38
Connecting Assembly without Stand Mount 39
Flat Belt Connecting Assembly without Stand Mount 39
Cleated Belt Connecting Assembly without Stand Mount 40
51mm to 152mm Flat Belt Return Roller 40
203mm to 610mm Flat Belt Return Roller 41
Cleated Belt Return Roller 41
Conveyor Belt Part Number Configuration 42
Return Policy 44

851-456 Rev. B

Warnings – General Safety

WARNING

The safety alert symbol, black triangle with white exclamation, is used to alert you to potential personal injury hazards.

DANGER

Climbing, sitting, walking or riding on conveyor will cause severe injury.

KEEP OFF CONVEYORS.

DANGER

DO NOT OPERATE CONVEYORS IN AN EXPLOSIVE ENVIRONMENT.

WARNING

Exposed moving parts can cause severe injury.

LOCK OUT POWER before removing guards or performing maintenance.

WARNING

Gearmotors may be HOT.

DO NOT TOUCH Gearmotors.

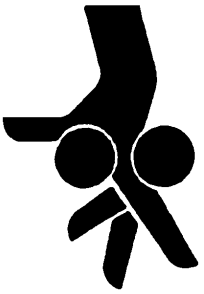

WARNING

Dorner cannot control the physical installation and application of conveyors. Taking protective measures is the responsibility of the user.

When conveyors are used in conjunction with other equipment or as part of a multiple conveyor system, CHECK FOR POTENTIAL PINCH POINTS and other mechanical hazards before system start-up.

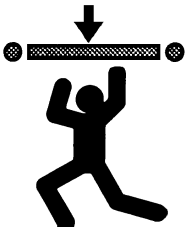

WARNING

Loosening stand height or angle adjustment screws may cause conveyor sections to drop down, causing severe injury.

SUPPORT CONVEYOR SECTIONS PRIOR TO LOOSENING STAND HEIGHT OR ANGLE ADJUSTMENT SCREWS.

Introduction

IMPORTANT: Some illustrations may show guards removed. DO NOT operate equipment without guards.

Upon receipt of shipment:

- Compare shipment with packing slip. Contact factory regarding discrepancies.
- Inspect packages for shipping damage. Contact carrier regarding damage.
- Accessories may be shipped loose. See accessory instructions for installation.

Dorner's Limited Warranty applies.

Dorner 2200 series conveyors are covered by Patent No. 5,174,435 and corresponding patents and patent applications in other countries.

Dorner reserves the right to make changes at any time without notice or obligation.

Product Description

Refer to Figure 1 for typical conveyor components.

Typical Components	
A	Conveyor
B	Gearmotor Mounting Package
C	Gearmotor
D	Guiding & Accessories
E	Mounting Brackets
F	Return Rollers
G	Support Stand
H	Variable Speed Controller
I	Drive End
J	Idler/Tension End

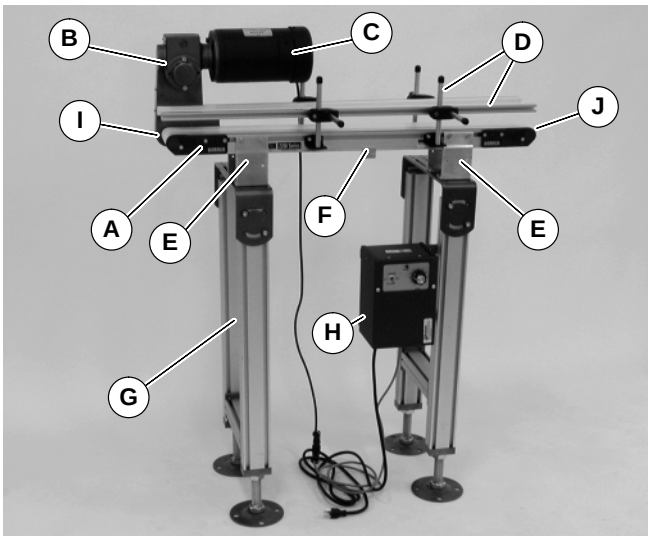

Figure 1

Specifications

Models:

Flat Belt 2200 Series Conveyor

2 1 0 M WW LLLL A PP BB

- **BB** — Belt Type*
- **PP** — Conveyor Profile*
- **A** — Output Shaft Position*
- **LLLL** — Conveyor Length Reference
- **WW** — Conveyor Width Reference
- **M** — Document Language, M = English
- **1** — 1 = Flat belt with tracking cams (non V-guided belt)
  2 = Flat belt with V-guide tracking
  3 = Nose bar transfer at tension end (non V-guided belt)

Cleated Belt 2200 Series Conveyor

2 4 C M WW LLLL A SSSS

- **SSSS** — Cleat Spacing*
- **A** — Output Shaft Position*
- **LLLL** — Conveyor Length Reference
- **WW** — Conveyor Width Reference
- **M** — Document Language, M = English
- **C** — Cleat Type*
- **4** — 4 = Cleated belt with V-guide tracking
  5 = Cleated belt with tracking cams (non V-guided belt)

*** See Ordering and Specifications Catalog for details.**

Conveyor Supports:

Maximum Distances:

K = 457 mm**

L = 1829 mm***

M = 457 mm

** **For Heavy Load Bottom Mount Package, mount support under gear head.**

*** **For conveyors longer than 3962 mm, install support at joint.**

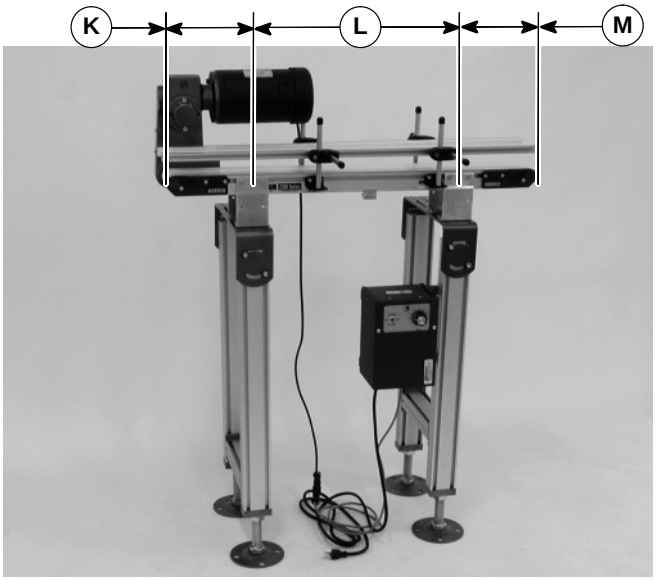

Figure 2

Specifications

Specifications:

Conveyor Width Reference (WW)	02	03	04	05	06	08	10	12	18	21	24
Conveyor Belt Width	44mm	70mm	95mm	127mm	152mm	203mm	254mm	305mm	457mm	533mm	609mm
Maximum Conveyor Load* (See NOTE Below)	14kg	16kg	19kg	23kg	27kg	32kg	36kg	36kg	36kg	36kg	36kg
Conveyor Startup Torque*	0.5Nm	0.6Nm	0.7Nm	0.8Nm	0.9Nm	1.1Nm	1.4Nm	1.4Nm	1.4Nm	1.4Nm	1.4Nm
Belt Travel	88 mm per revolution of pulley										
Maximum Belt Speed*	80.5 m/minute										
Belt Takeup	10 mm of stroke = 19 mm of belt take-up										

Conveyor Length Reference (LL)	02	03	04	05	06	07	08	09	10	11	12	13**	14**	15**	16**	17**	18**
Conveyor Length Up to 5486mm in any length to nearest 3mm	610 mm	914 mm	1219 mm	1524 mm	1829 mm	2134 mm	2438 mm	2743 mm	3048 mm	3353 mm	3658 mm	3962 mm**	4267 mm**	4572 mm**	4877 mm**	5182 mm**	5486 mm**

NOTE: Maximum conveyor loads based on:

- **Non-accumulating product**
- **Product moving towards gearmotor**
- **Conveyor being mounted horizontal**

*** See Ordering and Specifications Catalog for details.**

**** Lengths available only in 152 mm & wider conveyors.**

Installation

NOTE: Conveyor MUST be mounted straight, flat and level within confines of conveyor. Use a level (N of Figure 3) for setup.

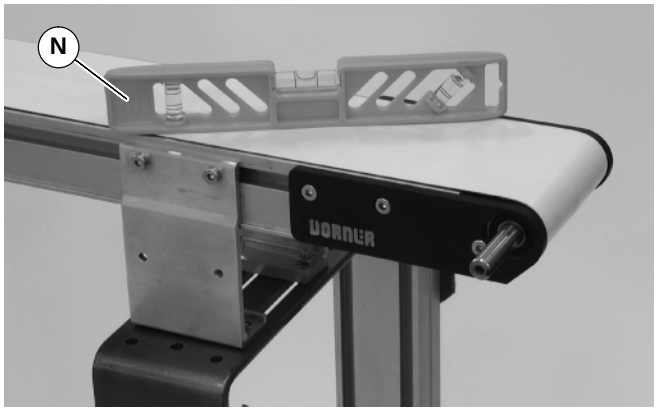

Figure 3

Installation Component List

O Conveyor frame (two sections if longer than 3658mm)
P Conveyor brackets (4x)
Q Return rollers (for longer conveyors)

Required Tools

- Hex-key wrenches:
  4 mm, 5 mm
- Level
- Torque wrench

Recommended Installation Sequence

- Install support stands (see accessory instructions)
- Assemble conveyor (if required)
- Attach mounting brackets to conveyor
- Attach conveyor to stands
- Install return rollers on conveyor (optional)
- Mount gearmotor mounting package (see accessory instructions)
- Attach guides/accessories (see accessory instructions)

Conveyors Up to 3962 mm

No assembly is required. Install mounting brackets and return rollers. Refer to “Mounting Brackets” on page 6 and “Return Rollers” on page 7.

Conveyors Longer Than 3962 mm

1. Locate conveyor sections (O Figure 4)

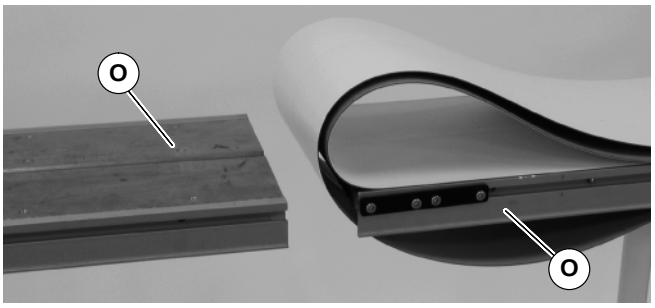

Figure 4

2. On tension end of the conveyor, identified with a label (R of Figure 5), push in head plate assembly (S): On both sides of conveyor, loosen and move cam tracking assemblies (T) (if equipped) away from head plates, then loosen fastening screws (U) and push head plate assembly inward.

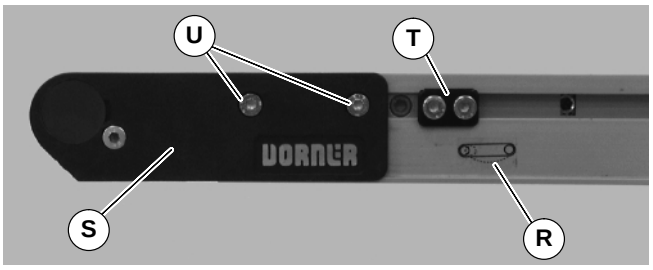

Figure 5

3. Roll out conveyor belt and place conveyor frame sections (O of Figure 6) into belt loop.

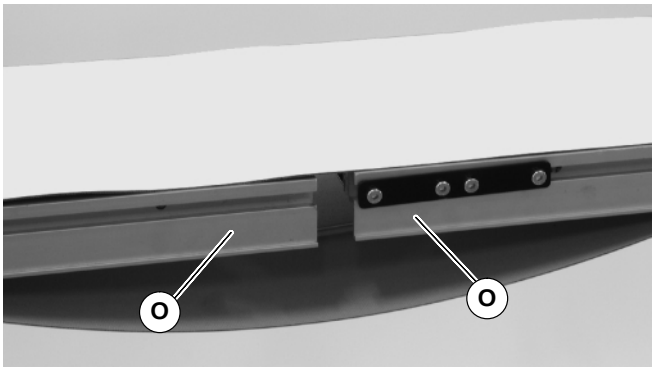

Figure 6

4. Join conveyor sections and install connector brackets (V of Figure 7) or connector/mount brackets (VA) and screws (W) on both sides as indicated. Tighten screws to 7 Nm.

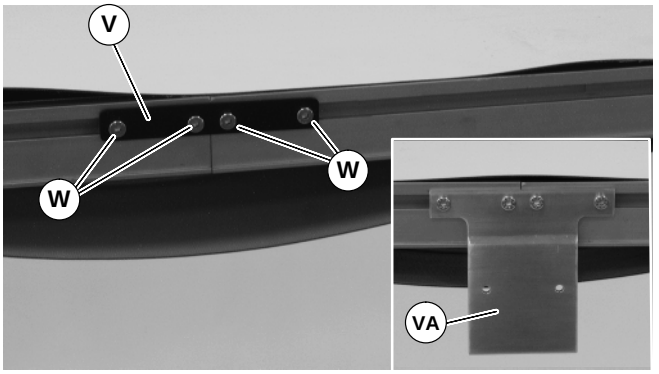

Figure 7

5. With a 5 mm hex-key wrench, rotate pinion gear (X of Figure 8) to tension the conveyor belt. Tighten fastening screws (U) on both sides of conveyor to 9 Nm. For proper tensioning, refer to “Conveyor Belt Tensioning” on page 11.

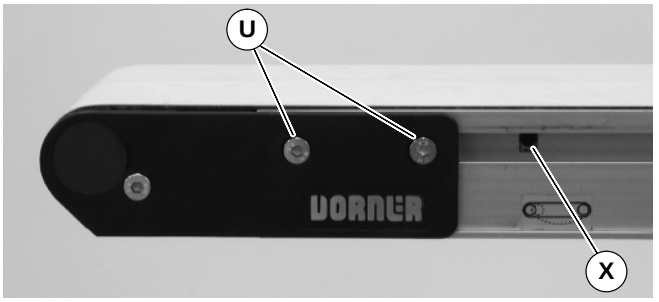

Figure 8

6. Install mounting brackets and return rollers. Refer to “Mounting Brackets” on page 6 and “Return Roller” on page 7.
7. If equipped with cam tracking assemblies (T of Figure 5), reposition and adjust belt tracking. Refer to “Conveyor Belt Tracking” on page 12.

Mounting Brackets

1. Locate brackets. Exploded views shown in Figures 9 & 10.

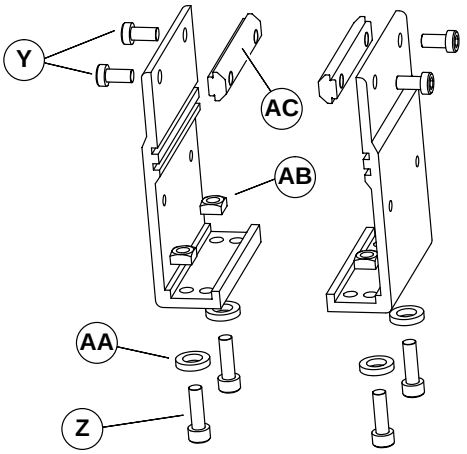

Mounting Brackets for Flat Belt Conveyor

Figure 9

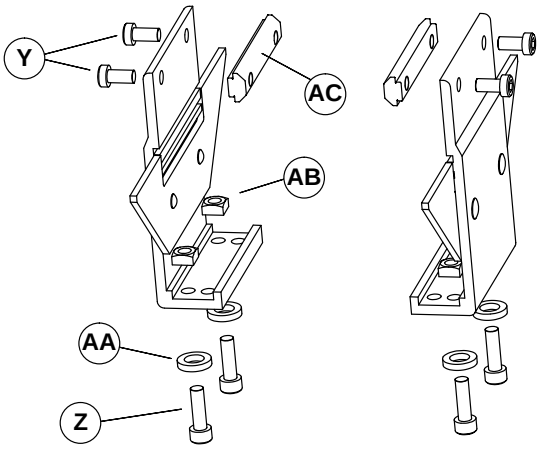

Mounting Brackets for Cleated Belt Conveyor

Figure 10

2. Remove screws (Y & Z of Figures 9 & 10), washers (AA), nuts (AB) and T-bars (AC) from brackets.
3. Insert T-bars (AC of Figures 9 & 10) into conveyor side slots (AD of Figure 11). Fasten brackets (P of Figure 11) to conveyor with mounting screws (Y).

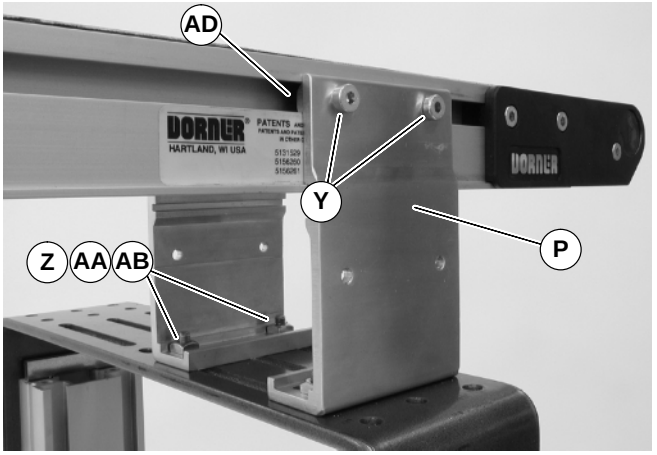

Figure 11

NOTE: Mounting brackets for flat belt conveyors shown.

4. Fasten brackets to support stand with mounting screws (Z of Figure 11), washers (AA) and nuts (AB).
5. Tighten screws (Y & Z of Figure 11) to 7 Nm.

Return Rollers

Cleated Belt and 51–152 mm Wide Flat Belt Conveyors

1. Locate return rollers. Exploded views shown in Figures 12 & 13.

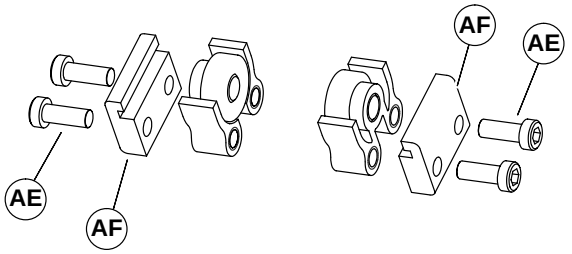

Return Rollers for Flat Belt Conveyor

Figure 12

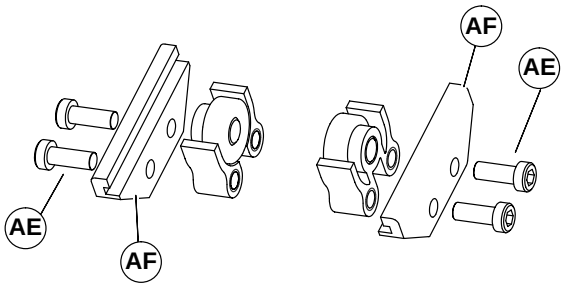

Return Rollers for Cleated Belt Conveyor

Figure 13

2. Remove screws (AE of Figures 12 & 13) and clips (AF) from roller assembly.
3. Install roller assemblies (Q of Figure 14) as shown. Tighten screws (AE) to 7 Nm.

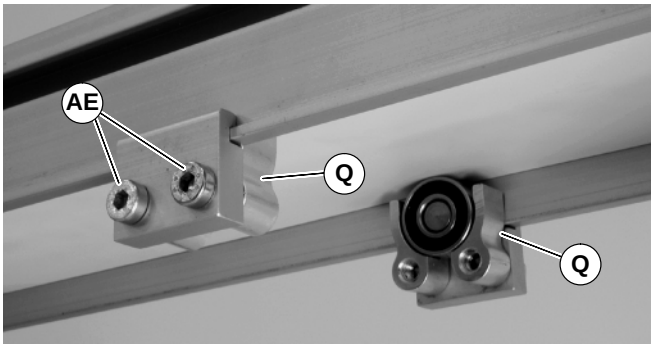

Figure 14

203–610 mm Wide Flat Belt Conveyors

1. Locate return rollers. Exploded view shown in Figure 15.

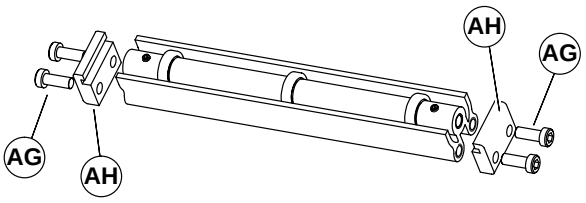

Figure 15

2. Remove screws (AG of Figure 15) and clips (AH) from roller assembly.
3. Install roller assembly as shown (Q of Figure 16). Tighten screws (AG) to 7 Nm.

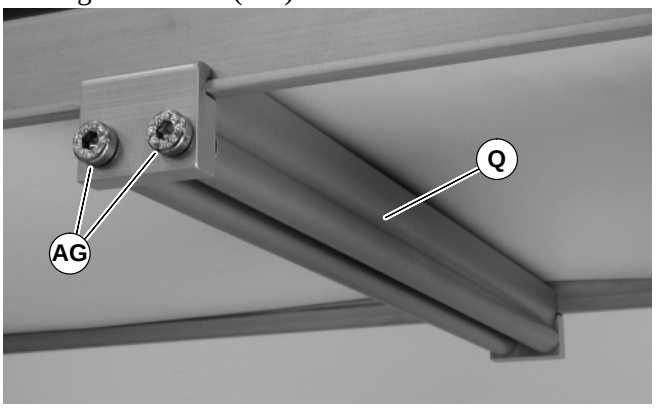

Figure 16

Preventive Maintenance and Adjustment

Required Tools

Standard Tools

- Hex-key wrenches:
  2.5 mm, 4 mm, 5 mm
- Arbor press

Special Tools

- 807–1078 Sealed Bearing Removal Tool
- 450292 Sealed Bearing Installation Tool

Checklist

- Keep service parts on hand (see “Service Parts” section for recommendations)
- Keep supply of belt cleaner (part # 625619)
- Clean entire conveyor and knurled pulley while disassembled
- Replace worn or damaged parts

Lubrication

No lubrication is required. Replace bearings if worn.

Maintaining Conveyor Belt

Troubleshooting

Inspect conveyor belt for:

- Surface cuts or wear
- Stalling or slipping
- Damage to V-guide

Surface cuts and wear indicate:

- Sharp or heavy parts impacting belt
- Jammed parts
- Improperly installed bottom wipers (if installed)
- Accumulated dirt in wipers (if installed)
- Foreign material inside the conveyor
- Improperly positioned accessories
- Bolt-on guiding is pinching belt

Stalling or slipping indicates:

- Excessive load on belt
- Conveyor belt or drive timing belt are not properly tensioned
- Worn knurl or impacted dirt on drive pulley
- Intermittent jamming or drive train problems

Damage to V-guide indicates:

- Twisted or damaged conveyor frame
- Dirt impacted on pulleys
- Excessive or improper side loading

NOTE: Visit www.dorner.com for complete list of troubleshooting solutions.

Cleaning

IMPORTANT: Do not use belt cleaners that contain alcohol, acetone, Methyl Ethyl Ketone (MEK) or other harsh chemicals.

Use Dorner Belt Cleaner (part # 625619). Mild soap and water may also be used. Do not soak the belt.

For /05 woven polyester and /06 black anti-static belts, use a bristled brush to improve cleaning.

Conveyor Belt Replacement

WARNING

Exposed moving parts can cause severe injury.

LOCK OUT POWER before removing guards or performing maintenance.

Conveyor Belt Replacement Sequence

- Remove old conveyor belt:
  - -Conveyor without Stands or Gearmotor Mounting Package
  - -Conveyor with Stands and Gearmotor Mounting Package
- Install new conveyor belt
- Tension conveyor belt

Belt Removal for Conveyor Without Stands or Gearmotor Mounting Package

1. If equipped, remove bottom wipers (AJ of Figure 17): Remove fastening screws (AI) then remove wiper (AJ).

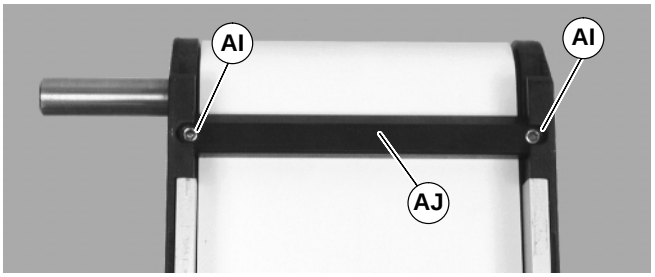

Figure 17

2. If equipped, remove return rollers and guiding and accessories from one side of conveyor.
3. On tension end of the conveyor, identified with a label (R of Figure 18), push in head plate assembly (S): On both sides of conveyor, loosen and move cam tracking assemblies (T) (if equipped) away from head plates, then loosen fastening screws (U) and push head plate assembly inward.

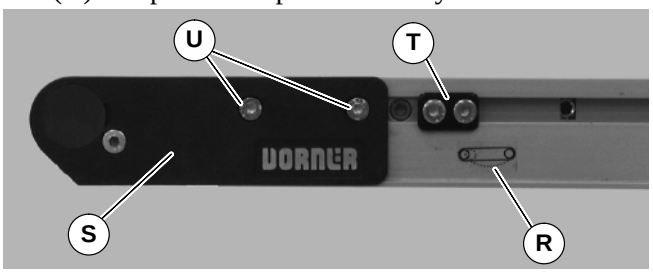

Figure 18

4. Remove conveyor belt.

Belt Removal for Conveyor With Stands and Gearmotor Mounting Package

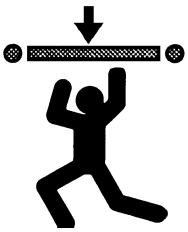

WARNING

Removing mounting brackets without support under gearmotor will cause conveyor to tip, causing severe injury.

PROVIDE SUPPORT UNDERNEATH THE GEARMOTOR WHEN CHANGING THE BELT

1. Place temporary support stands (AK of Figure 19) at both ends of the conveyor. Place an additional support stand under the drive motor (AL), if equipped. See **WARNING**.

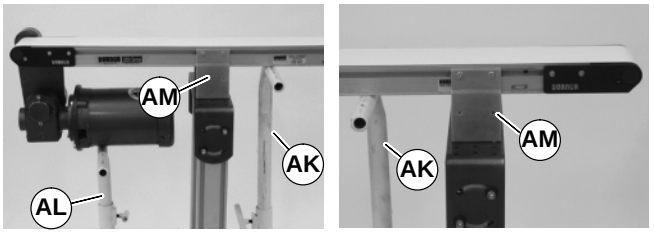

Figure 19

2. Remove mounting brackets (AM of Figure 19) from one side of conveyor. (Reverse steps 3 & 4 of "Mounting Brackets" section on page 6.) If equipped with heavy load drive package, remove brackets from side opposite drive cover (AN of Figure 20).
3. If equipped, remove bottom wipers (AJ of Figure 17): Remove fastening screws (AI) then remove wiper (AJ).
4. If equipped, remove return rollers, guiding and accessories from side opposite drive cover (AN of Figure 20).

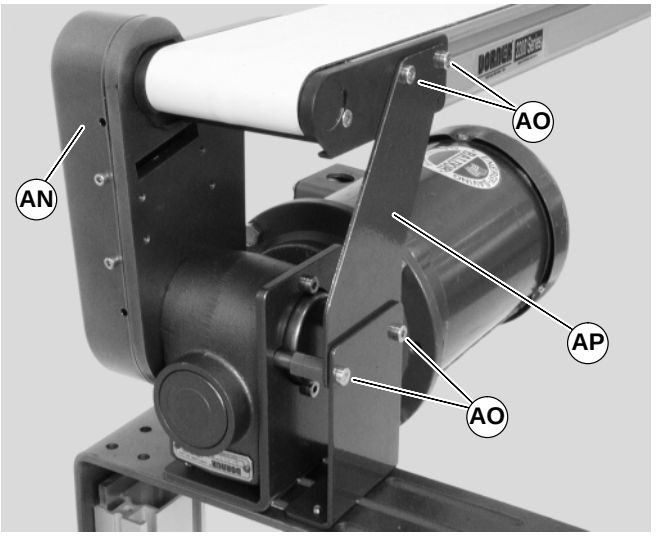

Figure 20

5. If equipped with heavy load drive package, remove drive support bracket (AP of Figure 20): Remove bracket screws (AO) then remove bracket (AP).

6. On tension end of the conveyor, identified with a label (R of Figure 21), push in head plate assembly (S): On both sides of conveyor, loosen and move cam tracking assemblies (T) (if equipped) away from head plates, then loosen fastening screws (U) and push head plate assembly inward.

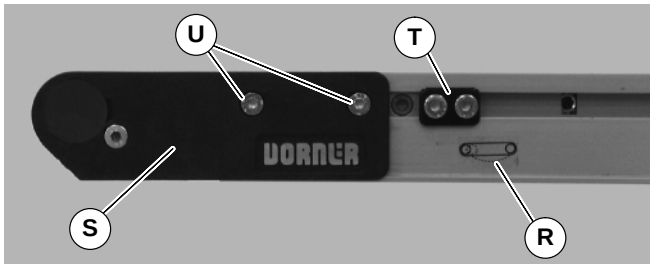

Figure 21

7. Remove belt (AQ of Figure 22) from conveyor.

Figure 22

Belt Installation for Conveyor without Stands or Gearmotor Mounting Package

1. Orient belt so splice leading fingers (AR of Figure 23) point in the direction of belt travel as identified by the conveyor directional label (AS).

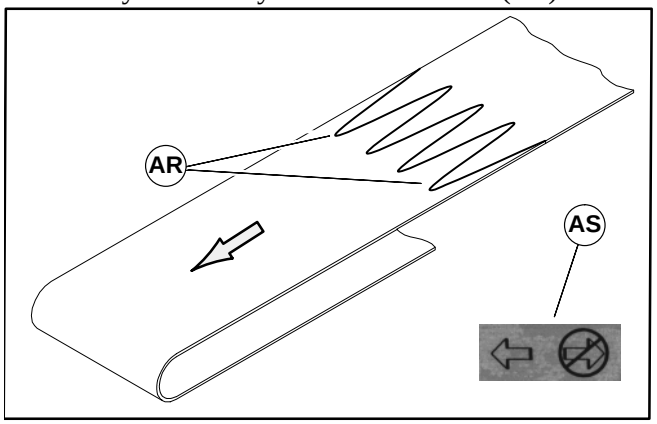

Figure 23

2. Slide belt onto the conveyor frame assembly.
3. Tension belt. Refer to "Conveyor Belt Tensioning" on page 11.
4. If equipped, install wipers, return rollers and guiding.

Belt Installation for Conveyor with Stands and Gearmotor Mounting Package

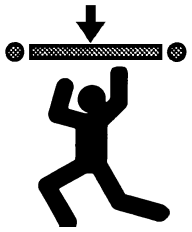

WARNING

Removing mounting brackets without support under gearmotor will cause conveyor to tip, causing severe injury.

PROVIDE SUPPORT UNDERNEATH THE GEARMOTOR WHEN CHANGING THE BELT

1. Ensure temporary support stands (AK of Figure 19) are placed at both ends of the conveyor. Place an additional support stand under the drive motor (AL), if equipped. See **WARNING**.
2. Orient belt so splice leading fingers (AR of Figure 23) point in the direction of belt travel as identified by the conveyor directional label (AS).
3. Install belt (AQ of Figure 24) on conveyor. Lift conveyor slightly to avoid pinching belt on temporary support stands.

Figure 24

4. Re-install conveyor mounting brackets. Refer "Mounting Brackets" on page 6, steps 3 through 5.
5. If equipped with a heavy load drive package, re-install drive support bracket (AP of Figure 20).
6. Tension belt. Refer to "Conveyor Belt Tensioning" on page 11.
7. If equipped, re-install wipers, return rollers and guiding.

Conveyor Belt Tensioning

WARNING

Exposed moving parts can cause severe injury.

LOCK OUT POWER before removing guards or performing maintenance.

Conveyors with 32 mm Diameter Pulleys

1. On tension end of the conveyor, identified with a label (R of Figure 25), adjust head plate assembly (S): On both sides of conveyor, loosen fastening screws (U) and rotate pinion gear (X) to adjust head plate assembly.

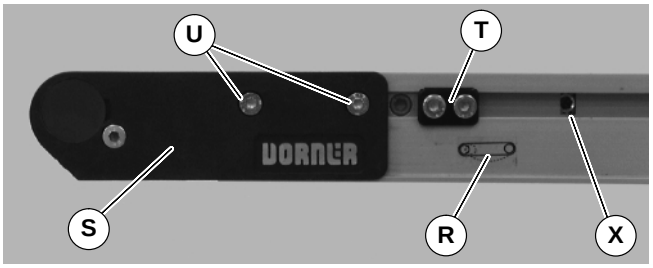

Figure 25

2. Adjust head plate assembly so end of conveyor frame aligns with or between the head plate tensioning marks (AT & AU of Figure 26). Replace belt if proper tensioning can not be obtained while aligning the end of the conveyor frame with or between the tensioning marks. See **NOTE**.

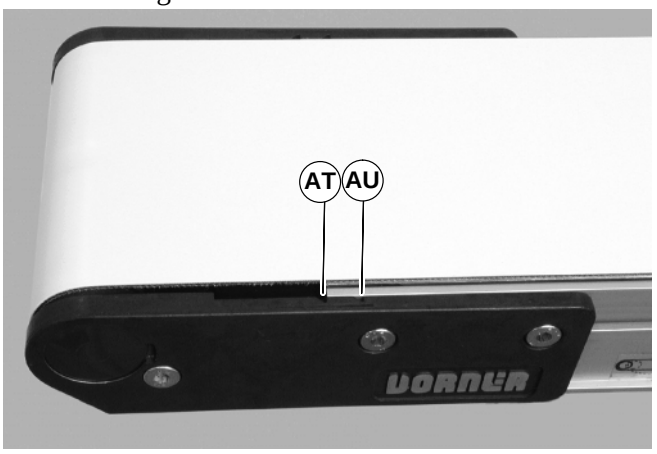

Figure 26

NOTE: On pinion gear, do not exceed a torque of 2.8 Nm for 44 – 305mm wide conveyors and 4.5 Nm for an 457 – 610mm wide conveyor. Over tensioning the conveyor belt could cause excessive pulley bearing load and early failure.

3. After adjusting proper tensioning, tighten fastening screws (U of Figure 25) on both sides of conveyor to 7 Nm.
4. If equipped with cam tracking assemblies (T of Figure 25), position against head plates and adjust belt tracking. Refer to “Conveyor Belt Tracking” on page 12.

Conveyors with Nose Bar Idlers

1. On tension end of the conveyor, identified with a label (R of Figure 27), adjust head plate assembly (S): On both sides of conveyor, loosen fastening screws (U) and rotate pinion gear (X) to adjust head plate assembly.

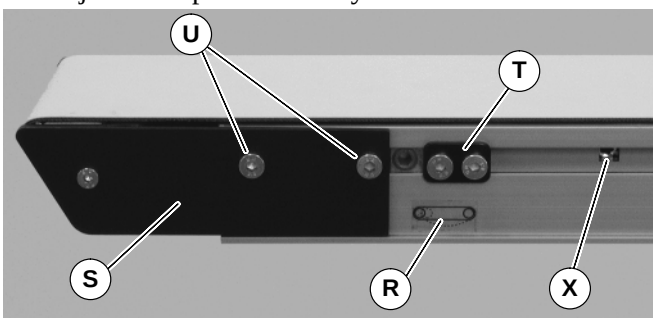

Figure 27

2. Adjust head plate assembly so the edge of the axle support plate (AV of Figure 28) is separated from the end of the conveyor (AW) by 29 mm. Replace belt if proper tensioning can not be obtained within a distance of 38 mm. See **NOTE**.

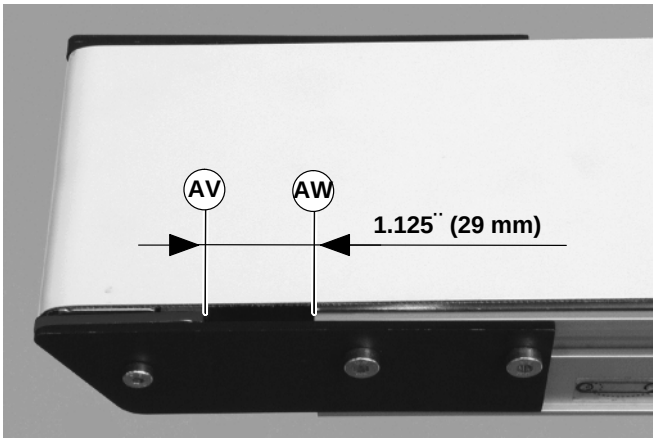

Figure 28

NOTE: On pinion gear, do not exceed a torque of 2.8 Nm for 44 – 305mm wide conveyors and 4.5 Nm for an 457 – 610mm wide conveyor. Over tensioning the conveyor belt could cause excessive pulley bearing load and early failure.

3. After adjusting proper tensioning, tighten fastening screws (U of Figure 27) on both sides of conveyor to 7 Nm.
4. If equipped with cam tracking assemblies (T of Figure 27) position against head plates and adjust belt tracking. Refer to “Conveyor Belt Tracking”, next section.

Conveyor Belt Tracking

V-Guided Belts

V-guided belts do not require tracking adjustment.

Non V-Guided Belts

Non V-guided belt conveyors are equipped with belt tracking cam assemblies (T of Figure 29) for belt tracking adjustment.

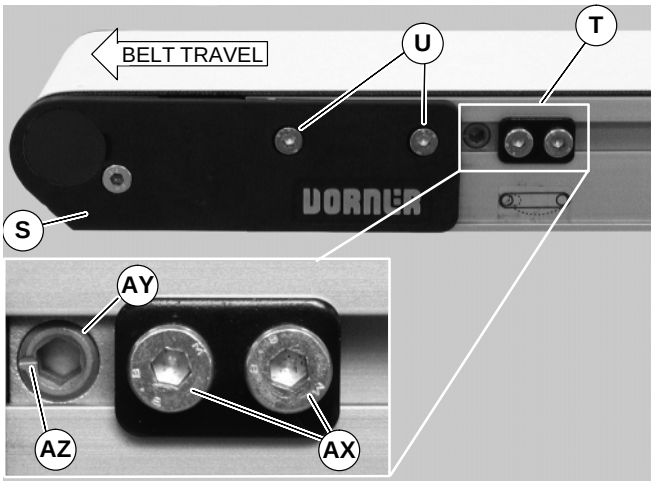

Figure 29

When adjusting belt tracking, always adjust the discharge end of the conveyor first. To adjust belt tracking:

1. Ensure head plate fastening screws (U of Figure 29) on both sides of conveyor are tightened.
2. On both sides of conveyor, loosen two (2) cam fastening screws (AX). Adjust cams (AY) until indicator slots (AZ) are horizontal and facing end of conveyor. Then slide cam assemblies against head plates (S) and re-tighten cam fastening screws (AX) to 7 Nm.
3. On the side toward which the belt is tracking, loosen head plate fastening screws (U).
4. With the conveyor running, use a 5 mm hex-key wrench to rotate the tracking cam (AY) in small increments until the belt tracks in the center of the conveyor. Then while holding the cam in position, re-tighten the head plate fastening screws (U) with a 4 mm hex-key wrench to 7 Nm.

Pulley Removal

WARNING

Exposed moving parts can cause severe injury.

LOCK OUT POWER before removing guards or performing maintenance.

Remove conveyor belt to access pulley(s). See “Conveyor Belt Replacement” on page 8. Remove the desired pulley following the corresponding instructions below:

- A – Idler Pulley Removal
- B – Drive Pulley Removal

A – Idler Pulley Removal

1. On both sides of conveyor, loosen two (2) fastening screws (U of Figure 30). Then slide idler pulley assembly out from the conveyor frame.

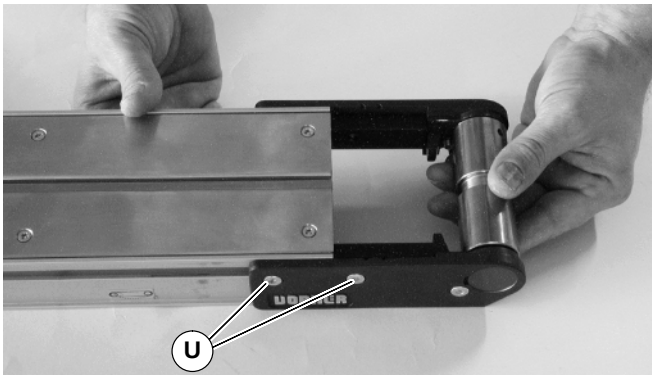

Figure 30

2. Remove bearing covers (BA of Figure 31).

Figure 31

3. With 4mm hex-key wrench, loosen pulley taper screw (BB of Figure 32). Steady pulley with second hex-key wrench (BC) inserted into pulley hole. Repeat procedure for opposite side of pulley.

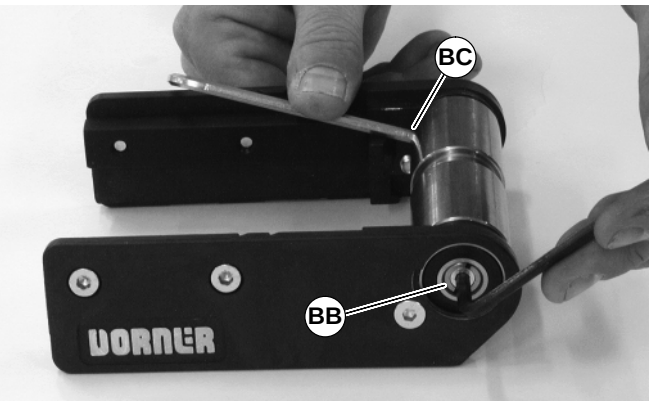

Figure 32

4. Pull head plates with bearings off from the pulley.

B – Drive Pulley Removal

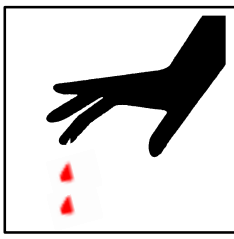

WARNING

Drive shaft keyway may be sharp.

HANDLE WITH CARE.

1. On both sides of conveyor, loosen two (2) fastening screws (U of Figure 33). Then slide drive pulley assembly out from the conveyor frame.

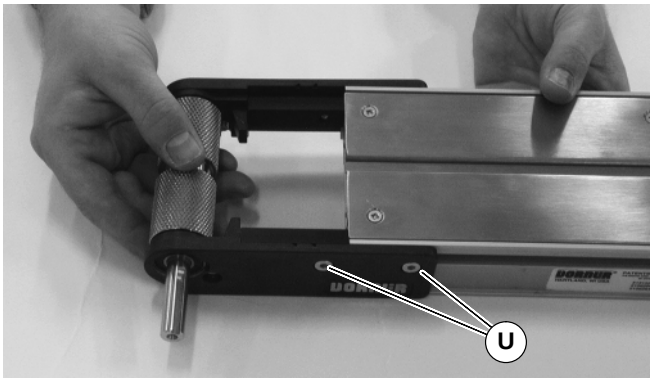

Figure 33

2. Remove bearing cover (BA of Figure 34) from side opposite of drive shaft.

Figure 34

3. On side opposite of drive shaft, loosen pulley taper screw (BB of Figure 35) with 4mm hex-key wrench. Steady pulley with second hex-key wrench (BC) inserted into pulley hole.

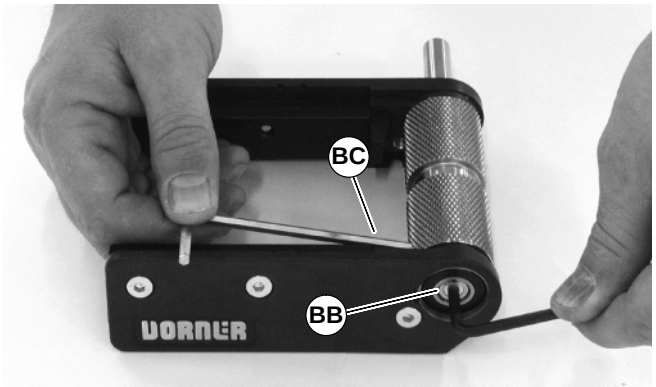

Figure 35

4. On side opposite of drive shaft, pull head plate with bearings off from the pulley.
5. With bearing removal tool, (BD of Figure 36), part number 807–1078, remove head plate from drive shaft side of pulley. Connect tool jaws at indicated points (BE).

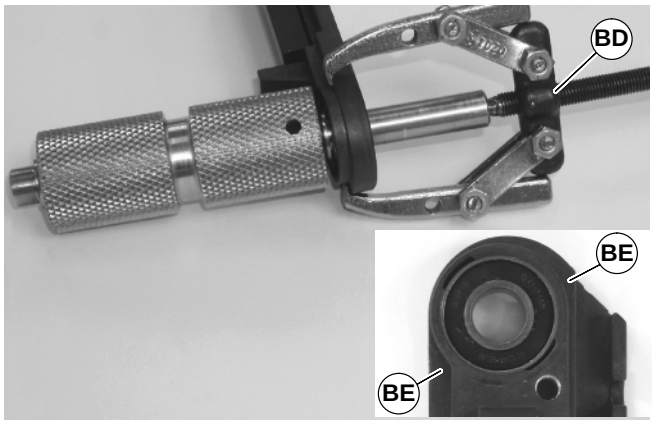

Figure 36

Bearing Removal & Replacement

Removal

1. Turn bearing (BF of Figure 37) to align with slots (BG) in head plate. Then remove bearing.

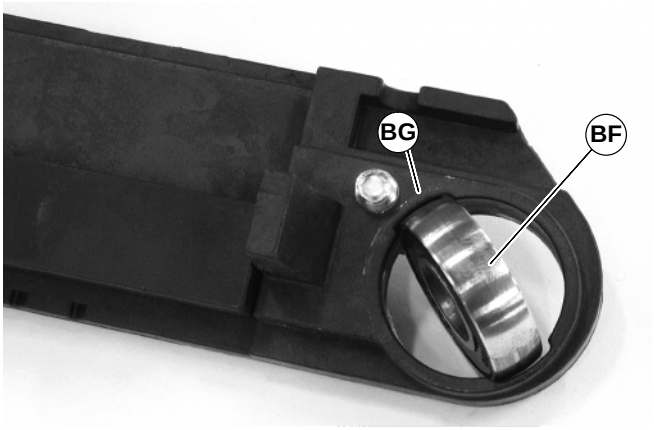

Figure 37

Replacement

1. Inspect head plate bearing surface. If worn or damaged, replace head plate. See “Service Parts” on page NO TAG.
2. Insert bearing (BF of Figure 38) into head plate slot and twist bearing to fit into bearing enclosure.

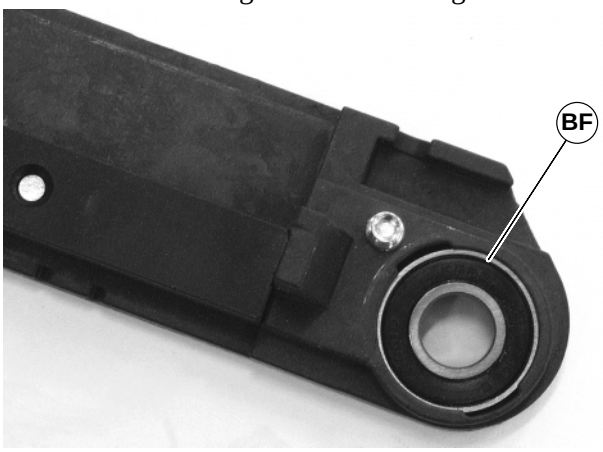

Figure 38

Pulley Replacement

Drive Pulley

1. With bearing installed in head plate, use a bearing installation tool, (BH of Figure 39), part number 450292, to press the bearing onto the drive shaft.

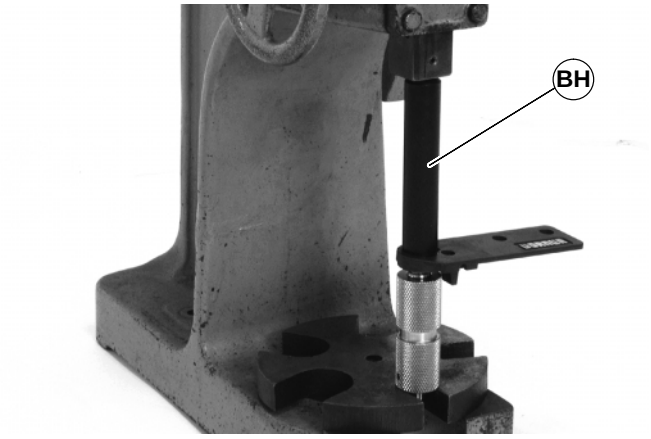

Figure 39

2. With bearing installed in head plate, press bearing on to non-drive shaft (BI of Figure 40) of pulley.

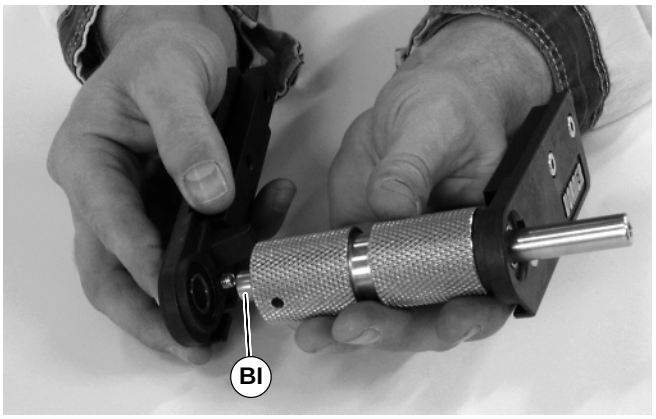

Figure 40

NOTE: DO NOT tighten non-drive shaft bearing taper screws at this time.

3. Install pulley assembly on conveyor. On both sides of conveyor tighten fastening screws (U of Figure 41) to 7 Nm.

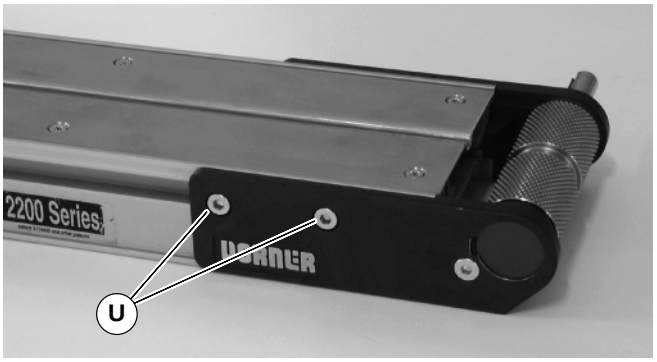

Figure 41

4. With 4mm hex-key wrench, tighten pulley taper screw (BB of Figure 42) to 4 Nm. Steady pulley with second hex-key wrench (BC) inserted into pulley hole.

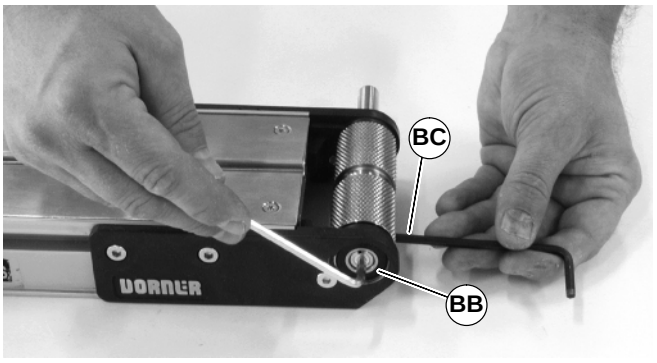

Figure 42

5. Install bearing covers (BA of Figure 43).

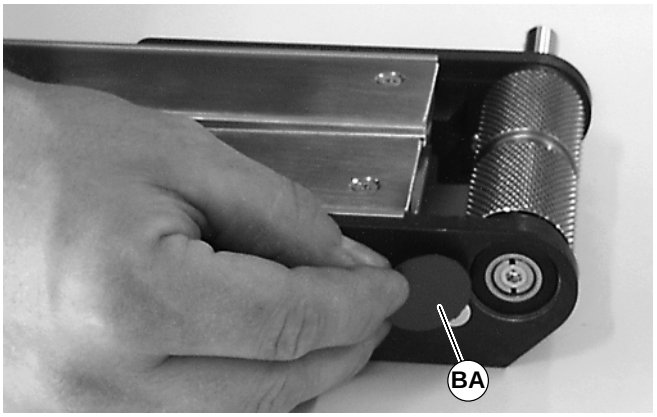

Figure 43

Idler Pulley

1. With bearing installed in head plate, press bearing on to shaft (BI of Figure 44) of pulley. Repeat for both sides of pulley.

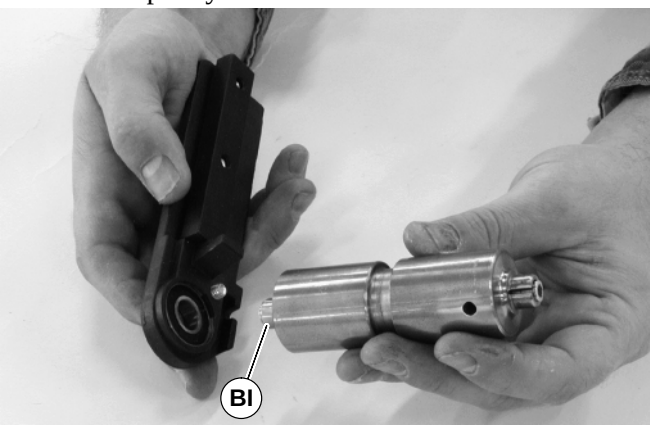

Figure 44

NOTE: DO NOT tighten shaft bearing taper screws at this time.

2. Install pulley assembly on conveyor. On both sides of conveyor, hand tighten fastening screws (U of Figure 45).

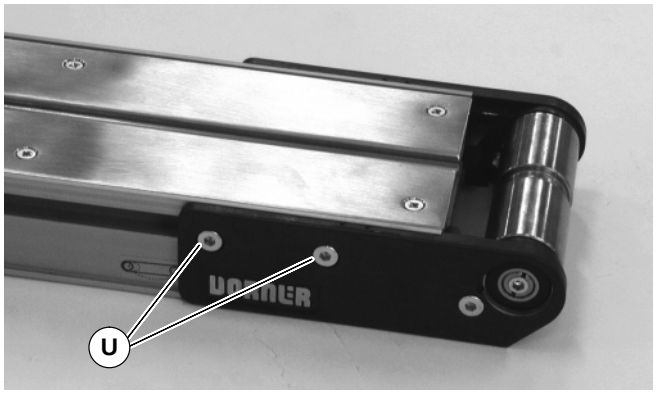

Figure 45

3. On both sides of pulley, use a 4mm hex-key wrench to tighten pulley taper screw (BB of Figure 46) to 4 Nm. Steady pulley with second hex-key wrench (BC) inserted into pulley hole.

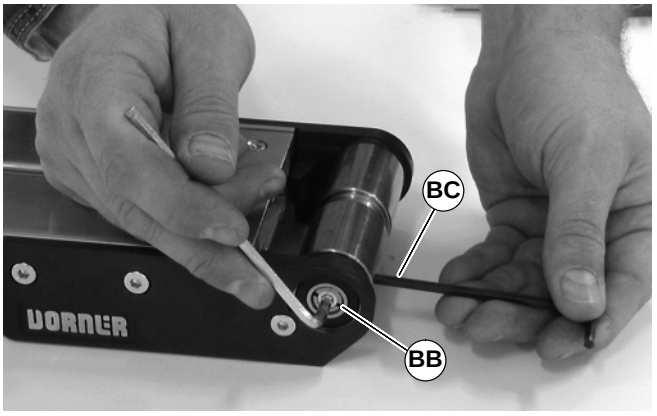

Figure 46

4. Install bearing covers (BA of Figure 47).

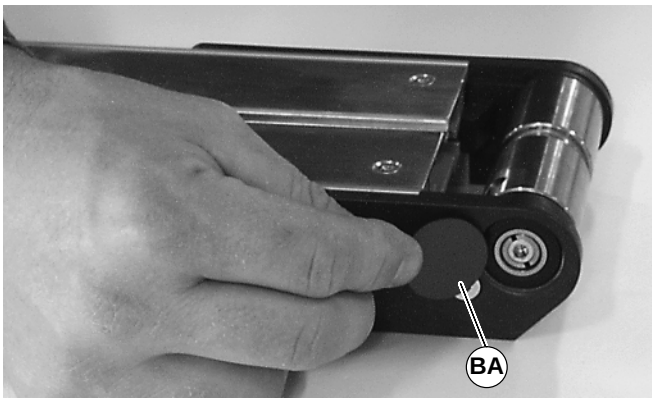

Figure 47

Nose Bar Bearing Replacement

1. On both sides of conveyor, use a 4 mm hex-key wrench to loosen cam fastening screws (BJ of Figure 48) and slide cam assemblies toward the center of the conveyor.

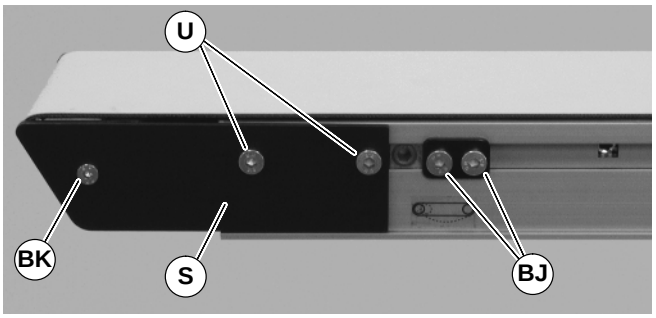

Figure 48

2. On both sides of conveyor, use a 4 mm hex-key wrench to loosen head plate fastening screws (U) to remove belt tension. Then remove belt from end of conveyor.
3. On one side of conveyor, use a 3 mm and 4 mm hex-key wrench to remove head plate fastening screws (BK & U) and remove head plate (S).
4. Slide bearing rods (BL of Figure 49) out side of conveyor and replace bearings (BM) as necessary.

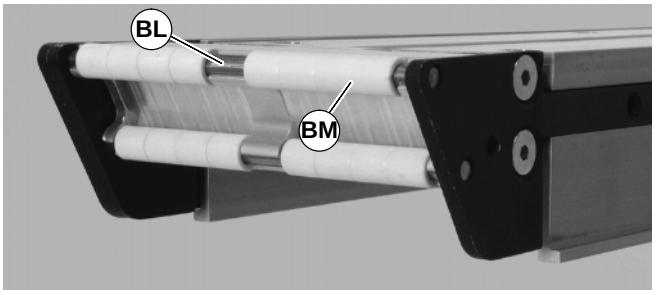

Figure 49

5. After replacing bearings, re-install head plate (S of Figure 48). Use a 3 mm hex-key wrench to tighten one (1) fastening screw (BK) to 3.4 Nm. Leave two (2) fastening screws (U) loose for belt tensioning.
6. Re-install belt on end of conveyor, then tension the belt. See “Conveyor Belt Tensioning” on page 11.
7. Re-position the cam assemblies against the head plates and adjust belt tracking. See “Conveyor Belt Tracking” on page 12.

Service Parts

NOTE: For replacement parts other than those shown on this page, contact an authorized Dorner Service Center or the factory.

51mm Wide Conveyor Assembly

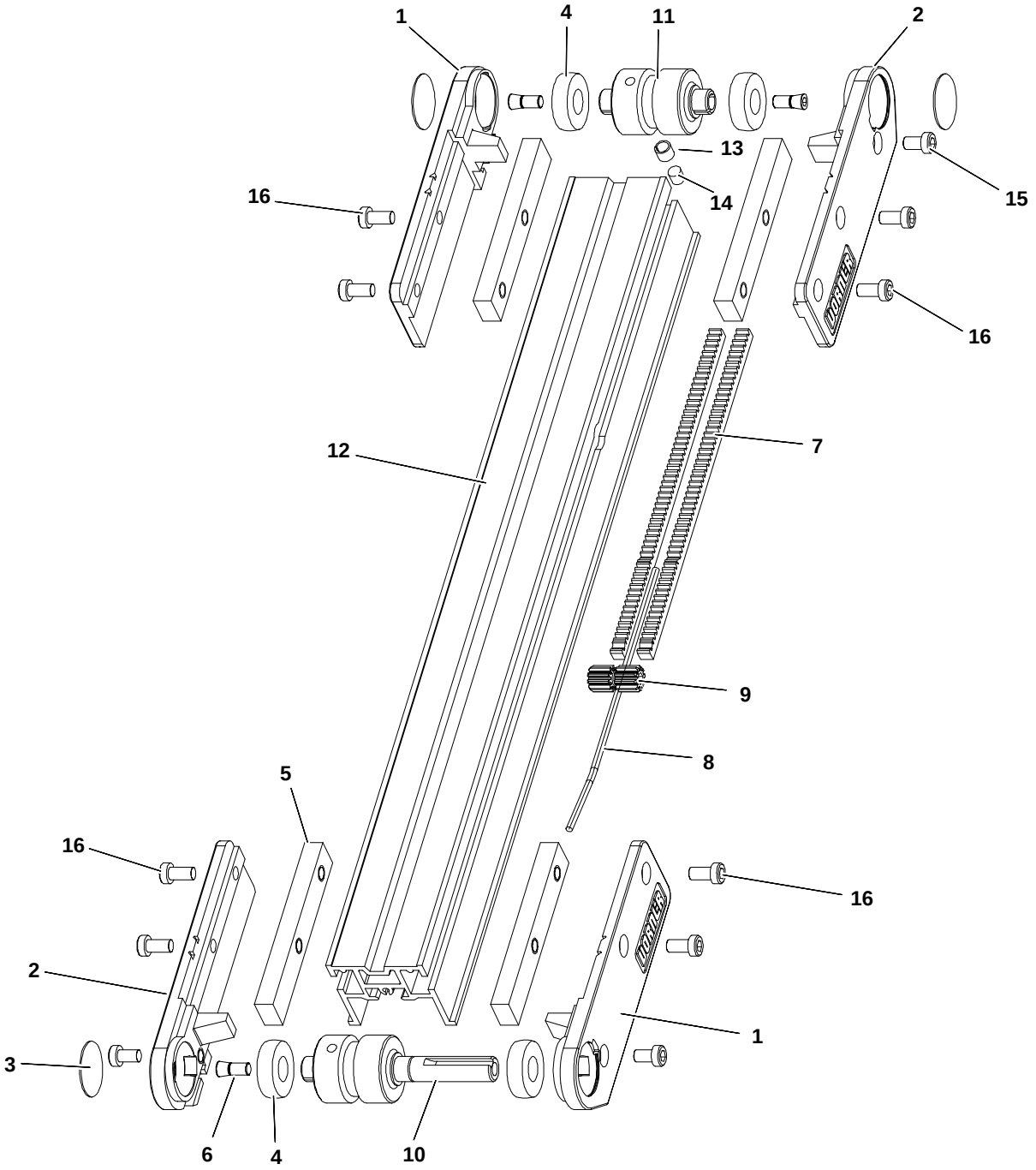

Item	Part Number	Description
1	240325	Head Plate LH
2	240326	Head Plate RH
3	240327	Bearing Cover Disk
4	240328	Bearing
5	240329	Tension Slide Bar
6	240330	Taper Screw
7	240420	Rack Gear 14.5 PA x 24 P
8	240422	Pinion Pin
9	240423	Pinion 51mm
10	240602	Drive Spindle 51mm
11	240702	Idler Spindle 51mm
12	See Chart Below	51mm Frame
13	450226SSP	Sleeve, 6.35mm Magnet Stainless Steel
14	808–020	Magnet 6.35mm Dia x 6.35mm Long
15	920691M	Socket Head Screw M6 x 10mm
16	920692M	Socket Head Screw M6 x 12mm

Item 12: 51mm Conveyor Frame	
Length	Part Number
610mm	240402–01908
914mm	240402–03108
1219mm	240402–04308
1524mm	240402–05508
1829mm	240402–06708
2134mm	240402–07908
2438mm	240402–09108
2743mm	240402–10308
3048mm	240402–11508
3353mm	240402–12708
3658mm	240402–13908

76mm to 152mm Wide Conveyor Assembly

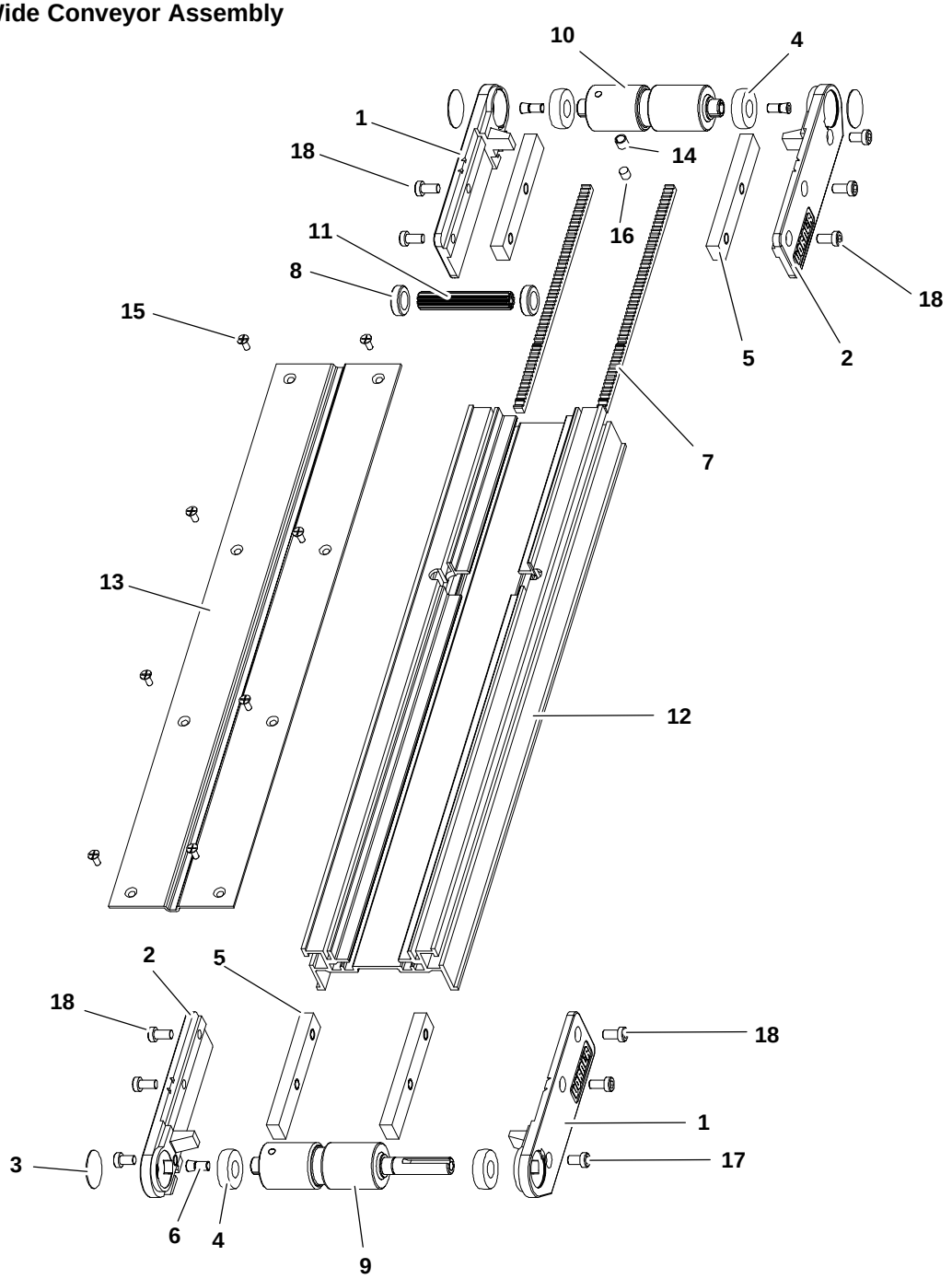

Item	Part Number	Description
1	240325	Head Plate LH
2	240326	Head Plate RH
3	240327	Bearing Cover Disk
4	240328	Bearing
5	240329	Tension Slide Bar
6	240330	Taper Screw
7	240420	Rack Gear 14.5 PA x 24 P
8	240421	Pinion Bushing
9	240603	Drive Spindle 76mm
	240604	Drive Spindle 102mm
	240605	Drive Spindle 127mm
	240606	Drive Spindle 152mm
10	240703	Idler Spindle 76mm
	240704	Idler Spindle 102mm
	240705	Idler Spindle 127mm
	240706	Idler Spindle 152mm
11	203003M	Gear Pinion 76mm
	203004M	Gear Pinion 102mm
	203005M	Gear Pinion 127mm
	203006M	Gear Pinion 152mm
12	See Chart Below	Conveyor Frame
13	See Chart Below	Bed Plate
14	450226SSP	Sleeve, 6.35mm Magnet Stainless Steel
15	807–1074	Flat Head Screw M4 x 10mm
16	808–020	Magnet 6.35mm Dia x 6.35mm Long
17	920691M	Socket Head Screw M6 x 10mm
18	920692M	Socket Head Screw M6 x 12mm

Item 12: Conveyor Frame		
Length	Part Number	
610mm	2404WW–01908	
914mm	2404WW–03108	
1219mm	2404WW–04308	
1524mm	2404WW–05508	
1829mm	2404WW–06708	
2134mm	2404WW–07908	
2438mm	2404WW–09108	
2743mm	2404WW–10308	
3048mm	2404WW–11508	
3353mm	2404WW–12708	
3658mm	2404WW–13908	
3962mm	2404WW–06708	2404WW–07908*
4267mm	2404WW–06708	2404WW–09108*
4572mm	2404WW–06708	2404WW–10308*
4877mm	2404WW–06708	2404WW–11508*
5182mm	2404WW–06708	2404WW–12708*
5486mm	2404WW–06708	2404WW–13908*
WW = Conveyor width reference: 03, 04, 05, 06 * = 152mm and wider conveyors		

Item 13: Bed Plate		
Length	Part Number	
610mm	2405WW–01904	
914mm	2405WW–03104	
1219mm	2405WW–04304	
1524mm	2405WW–05504	
1829mm	2405WW–06704	
2134mm	2405WW–07904	
2438mm	2405WW–09104	
2743mm	2405WW–10304	
3048mm	2405WW–11504	
3353mm	2405WW–12704	
3658mm	2405WW–13904	
3962mm	2405WW–07196	2404WW–07904*
4267mm	2405WW–07196	2404WW–09104*
4572mm	2405WW–07196	2404WW–10304*
4877mm	2405WW–07196	2404WW–11504*
5182mm	2405WW–07196	2404WW–12704*
5486mm	2405WW–07196	2404WW–13904*
WW = Conveyor Width reference: 03, 04, 05, 06 * = 152mm and wider conveyors		

203mm to 605mm Wide Conveyor Assembly

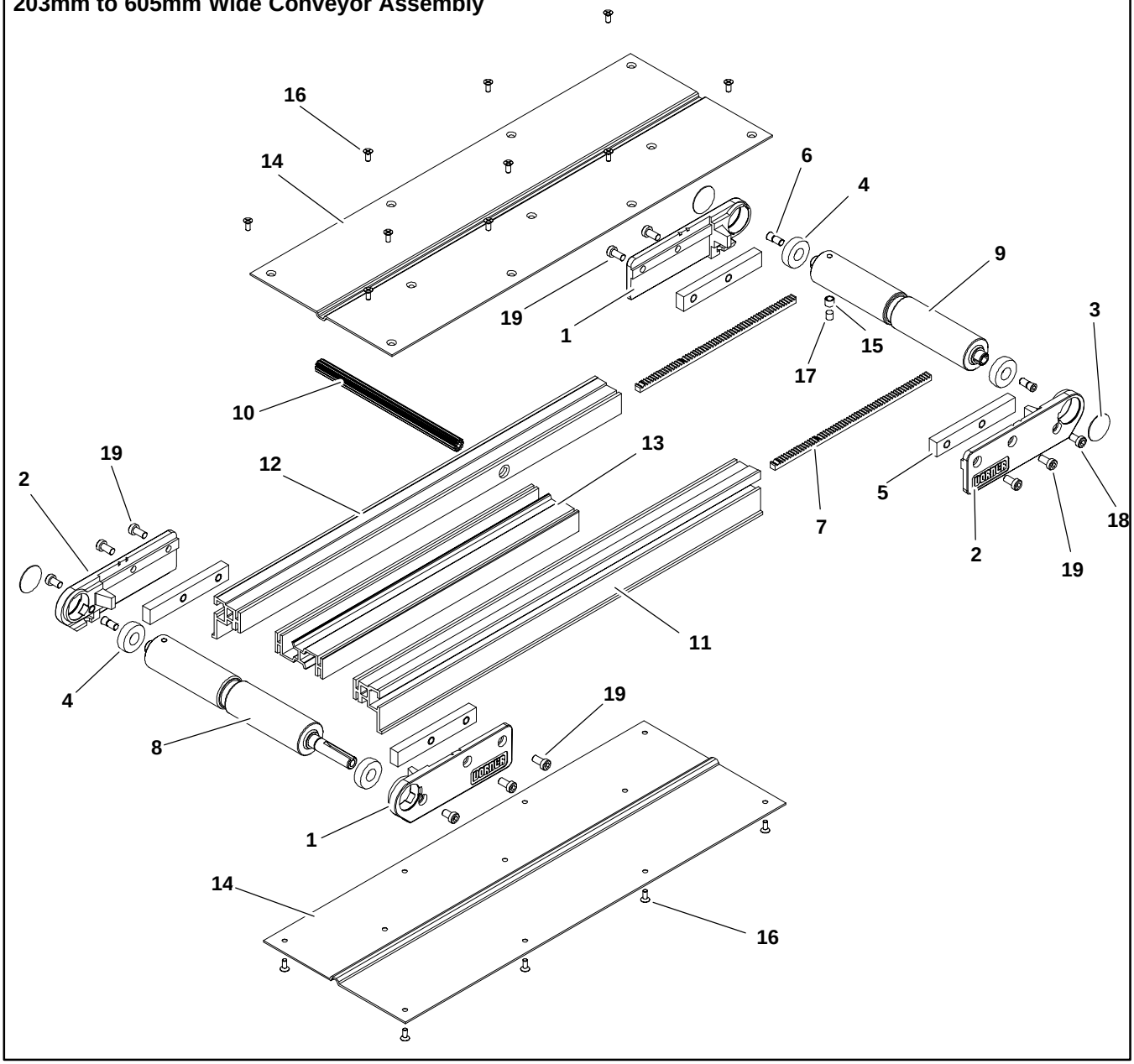

Item	Part Number	Description
1	240325	Head Plate LH
2	240326	Head Plate RH
3	240327	Bearing Cover Disk
4	240328	Bearing
5	240329	Tension Slide Bar
6	240330	Taper Screw
7	240420	Rack Gear 14.5 PA x 24P
8	240608	Drive Spindle 203mm
	240610	Drive Spindle 254mm
	240612	Drive Spindle 305mm
9	240708	Idler Spindle 203mm
	240710	Idler Spindle 254mm
	240712	Idler Spindle 305mm
10	203008M	Pinion Gear 203mm
	203010M	Pinion Gear 254mm
	203012M	Pinion Gear 305mm
11	See Chart Below	Side Rail RH 203–610mm Wide
12	See Chart Below	Side Rail LH 203–610mm Wide
13	See Chart Below	Center Rail 203–305mm Wide
14	See Chart Below	Bed Plate
15	450226SSP	Sleeve 6.35mm Magnet Stainless Steel
16	807–1074	Flat Head Screw M4 x 10mm

17	808–020	Magnet 6.35mm DIA x 6.35mm Long
18	920691M	Socket Head Screw M6 x 10mm
19	920692M	Socket Head Screw M6 x 12mm

Item 11: Side Rail RH 203–610mm Wide	
Length	Part Number
610mm	240412–01908
914mm	240412–03108
1219mm	240412–04308
1524mm	240412–05508
1829mm	240412–06708
2134mm	240412–07908
2438mm	240412–09108
2743mm	240412–10308
3048mm	240412–11508
3353mm	240412–12708
3658mm	240412–13908
3962mm	240412–07200 240412–07908
4267mm	240412–07200 240412–09108
4572mm	240412–07200 240412–10308
4877mm	240412–07200 240412–11508
5182mm	240412–07200 240412–12708
5486mm	240412–07200 240412–13908

Item 12: Side Rail LH 203–610mm Wide	
Length	Part Number
610mm	240413–01908
914mm	240413–03108
1219mm	240413–04308
1524mm	240413–05508
1829mm	240413–06708
2134mm	240413–07908
2438mm	240413–09108
2743mm	240413–10308
3048mm	240413–11508
3353mm	240413–12708
3658mm	240413–13908
3962mm	240413–07200 240413–07908
4267mm	240413–07200 240413–09108
4572mm	240413–07200 240413–10308
4877mm	240413–07200 240413–11508
5182mm	240413–07200 240413–12708
5486mm	240413–07200 240413–13908

Item 13: Center Rail 203–305mm Wide	
Length	Part Number
610mm	240414–01273
914mm	240414–02473
1219mm	240414–03673
1524mm	240414–04873
1829mm	240414–06073
2134mm	240414–07273
2438mm	240414–08473
2743mm	240414–09673
3048mm	240414–10873
3353mm	240414–12073
3658mm	240414–13273
3962mm	240414–07200 240414–07273
4267mm	240414–07200 240414–08473
4572mm	240414–07200 240414–09673
4877mm	240414–07200 240414–10873
5182mm	240414–07200 240414–12073
5486mm	240414–07200 240414–13273

Item 14: Bed Plate	
Length	Part Number
610mm	2405WW–01904
914mm	2405WW–03104
1219mm	2405WW–04304
1524mm	2405WW–05504
1829mm	2405WW–06704
2134mm	2405WW–07904
2438mm	2405WW–09104
2743mm	2405WW–10304
3048mm	2405WW–11504
3353mm	2405WW–12704
3658mm	2405WW–13904
3962mm	2405WW–07196 2405WW–07904
4267mm	2405WW–07196 2405WW–09104
4572mm	2405WW–07196 2405WW–10304
4877mm	2405WW–07196 2405WW–11504
5182mm	2405WW–07196 2405WW–12704
5486mm	2405WW–07196 2405WW–13904
WW = Conveyor Width reference: 08, 10, 12	

Service Parts

457mm to 610mm Wide Conveyor Assembly

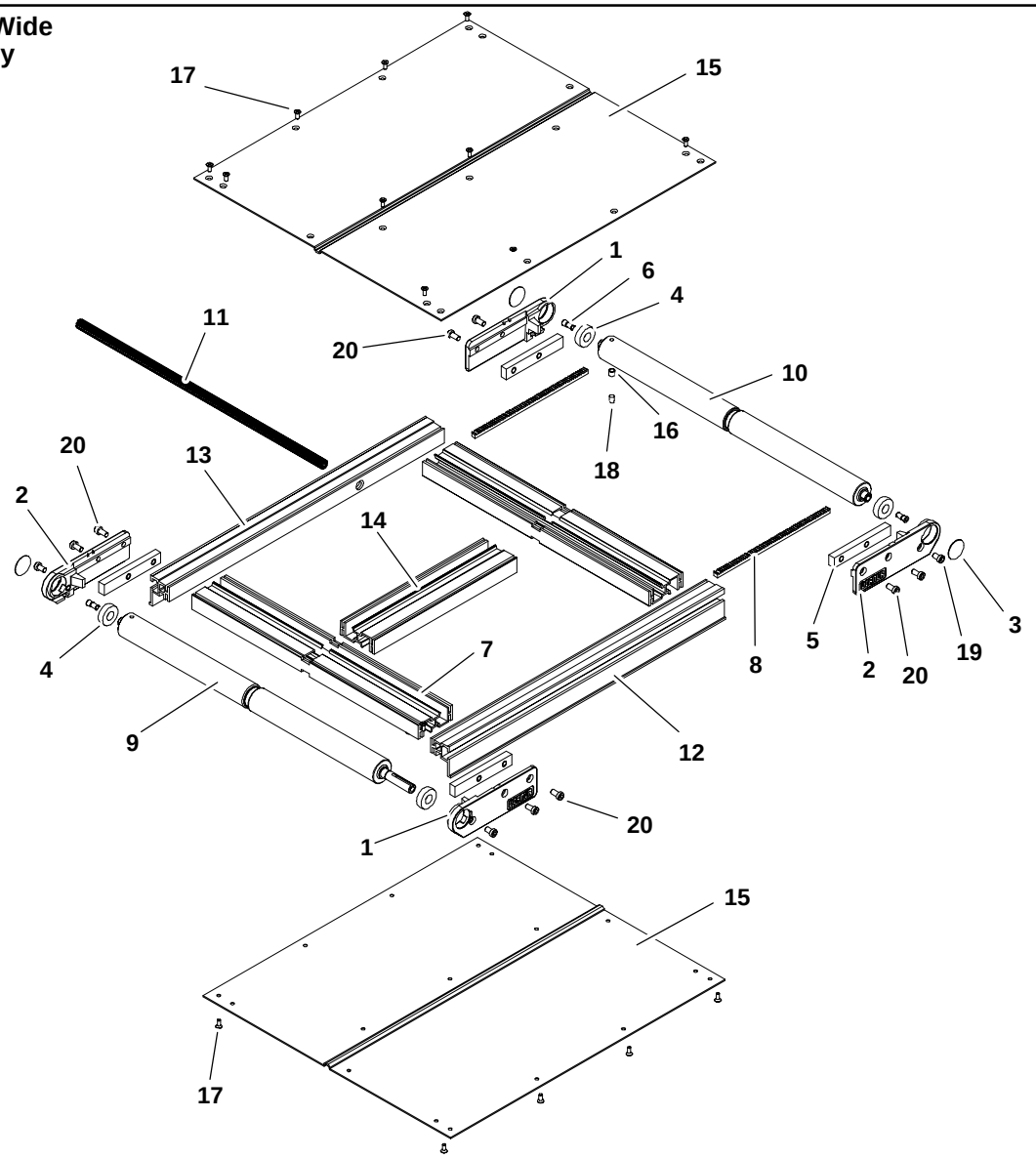

Item	Part Number	Description
1	240325	Head Plate LH
2	240326	Head Plate RH
3	240327	Bearing Cover Disk
4	240328	Bearing
5	240329	Tension Slide Bar
6	240330	Taper Screw
7	240417	Center Rail Cross Support 457mm
	240418	Center Rail Cross Support 533mm
	240419	Center Rail Cross Support 610mm
8	240420	Rack Gear 14.5 PA x 24P
9	240618	Drive Spindle 457mm
	240621	Drive Spindle 533mm
	240624	Drive Spindle 610mm
10	240718	Idler Spindle 457mm
	240721	Idler Spindle 533mm
	240724	Idler Spindle 610mm
11	203018M	Pinion Gear 457mm
	203021M	Pinion Gear 533mm
	203024M	Pinion Gear 610mm
12	See chart on next page	Side Rail RH 203–610mm Wide
13	See chart on next page	Side Rail LH 203–610mm Wide
14	See chart on next page	Center Rail 203–305mm Wide
15	See chart on next page	Bed Plate
16	450226SSP	Sleeve 6.35mm Magnet Stainless Steel
17	807–1074	Flat Head Screw M4 x 10mm
18	808–020	Magnet 6.35mm DIA x 6.35mm Long
19	920691M	Socket Head Screw M6 x 10mm
20	920692M	Socket Head Screw M6 x 12mm

Item 12: Side Rail RH 203–610mm Wide	
Length	Part Number
610mm	240412–01908
914mm	240412–03108
1219mm	240412–04308
1524mm	240412–05508
1829mm	240412–06708
2134mm	240412–07908
2438mm	240412–09108
2743mm	240412–10308
3048mm	240412–11508
3353mm	240412–12708
3658mm	240412–13908
3962mm	240412–07200 240412–07908
4267mm	240412–07200 240412–09108
4572mm	240412–07200 240412–10308
4877mm	240412–07200 240412–11508
5182mm	240412–07200 240412–12708
5486mm	240412–07200 240412–13908

Item 13: Side Rail LH 203–610mm Wide	
Length	Part Number
610mm	240413–01908
914mm	240413–03108
1219mm	240413–04308
1524mm	240413–05508
1829mm	240413–06708
2134mm	240413–07908
2438mm	240413–09108
2743mm	240413–10308
3048mm	240413–11508
3353mm	240413–12708
3658mm	240413–13908
3962mm	240413–07200 240413–07908
4267mm	240413–07200 240413–09108
4572mm	240413–07200 240413–10308
4877mm	240413–07200 240413–11508
5182mm	240413–07200 240413–12708
5486mm	240413–07200 240413–13908

Item 14: Center Rail 203–305mm Wide	
Length	Part Number
610mm	240414–00998
914mm	240414–02198
1219mm	240414–03398
1524mm	240414–04498
1829mm	240414–05798
2134mm	240414–06998
2438mm	240414–08198
2743mm	240414–09398
3048mm	240414–10598
3353mm	240414–11798
3658mm	240414–12998
3962mm	240414–06700 240414–06998
4267mm	240414–06700 240414–08198
4572mm	240414–06700 240414–09398
4877mm	240414–06700 240414–10598
5182mm	240414–06700 240414–11798
5486mm	240414–06700 240414–12998

Item 15: Bed Plate	
Length	Part Number
610mm	2405WW–01904
914mm	2405WW–03104
1219mm	2405WW–04304
1524mm	2405WW–05504
1829mm	2405WW–06704
2134mm	2405WW–07904
2438mm	2405WW–09104
2743mm	2405WW–10304
3048mm	2405WW–11504
3353mm	2405WW–12704
3658mm	2405WW–13904
3962mm	2405WW–07196 2405WW–07904
4267mm	2405WW–07196 2405WW–09104
4572mm	2405WW–07196 2405WW–10304
4877mm	2405WW–07196 2405WW–11504
5182mm	2405WW–07196 2405WW–12704
5486mm	2405WW–07196 2405WW–13904
WW = Conveyor Width reference: 08, 10, 12	

Nosebar End Assembly 51mm to 610mm Wide

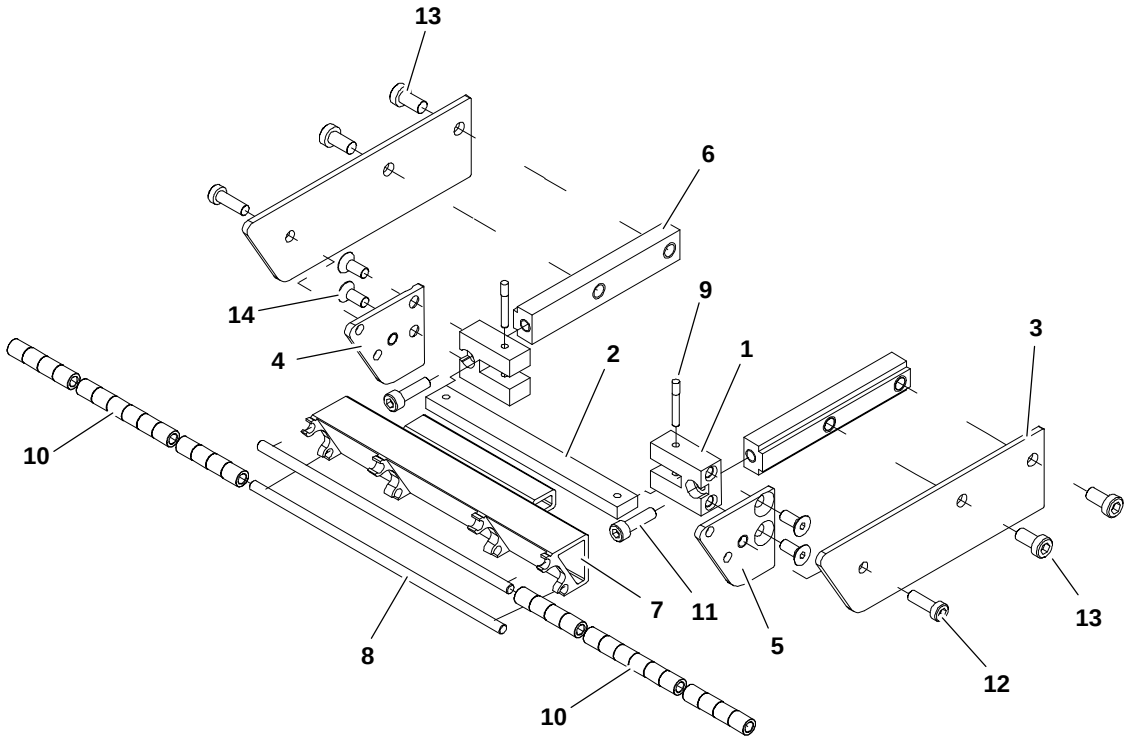

Item	Part Number	Description
1	201965	Mounting Block, PLT Spindle
2	207602	Flex–Link Bar 51mm
	207603	Flex–Link Bar 76mm
	207604	Flex–Link Bar 102mm
	207605	Flex–Link Bar 127mm
	207606	Flex–Link Bar 152mm
	207608	Flex–Link Bar 203mm
	207610	Flex–Link Bar 254mm
	207612	Flex–Link Bar 305mm
	207618	Flex–Link Bar 457mm
	207621	Flex–Link Bar 533mm
	207624	Flex–Link Bar 610mm
3	241125	Outer Side Plate
4	241126	Inner Side Plate LH
5	241127	Inner Side Plate RH
6	241128	Head Plate Bar
7	241202	Nosebar 51mm
	241203	Nosebar 76mm
	241204	Nosebar 102mm
	241205	Nosebar 127mm
	241206	Nosebar 152mm
	241208	Nosebar 203mm

	241210	Nosebar 254mm
	241212	Nosebar 305mm
	241218	Nosebar 457mm
	241221	Nosebar 533mm
	241224	Nosebar 610mm
8	241302	Nosebar Rod 51mm
	241303	Nosebar Rod 76mm
	241304	Nosebar Rod 102mm
	241305	Nosebar Rod 127mm
	241306	Nosebar Rod 152mm
	241308	Nosebar Rod 203mm
	241310	Nosebar Rod 254mm
	241312	Nosebar Rod 305mm
	241318	Nosebar Rod 457mm
	241321	Nosebar Rod 533mm
	241324	Nosebar Rod 610mm
9	200695P	Knurl Pin .125” DIA x .937” Lg
10	801–122	Nose Bar Roller
11	920518M	Sockety Head Screw M5 x 18mm
12	920593M	Socket Head Screw M5 x 16mm
13	920692M	Socket Head Screw M6 x 12mm
14	930512M	Flat Head Screw M5 x 12mm

–04 76mm Aluminum Side

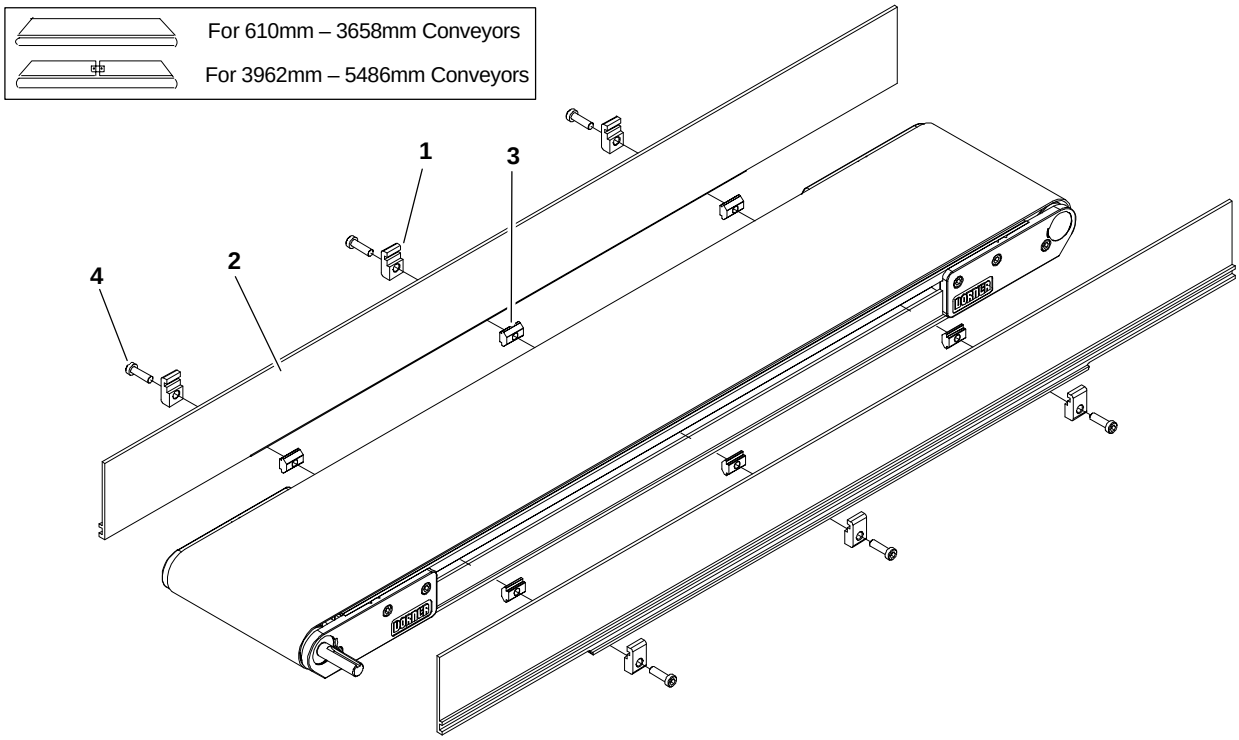

Item	Part Number	Description
1	200121	Guide Retaining Clip
2	See Chart Below	2200 Guide 76mm HS
3	200695P	Single Drop–in Tee Bar
4	920694M	Socket Head Screw M6 x 20mm

Item 2: 2200 Guide 3” (76mm) HS			
Length		End Guide	End Guide
610mm	Left Hand	280403–02400	N/A
	Right Hand	280403–02400	N/A
914mm	Left Hand	280403–03600	N/A
	Right Hand	280403–03600	N/A
1219mm	Left Hand	280403–04800	N/A
	Right Hand	280403–04800	N/A
1524mm	Left Hand	280403–06000	N/A
	Right Hand	280403–06000	N/A
1829mm	Left Hand	280403–07200	N/A
	Right Hand	280403–07200	N/A
2134mm	Left Hand	280403–08400	N/A
	Right Hand	280403–08400	N/A
2438mm	Left Hand	280403–09600	N/A
	Right Hand	280403–09600	N/A
2743mm	Left Hand	280403–10800	N/A
	Right Hand	280403–10800	N/A
3048mm	Left Hand	280403–12000	N/A
	Right Hand	280403–12000	N/A
3353mm	Left Hand	280403–13200	N/A
	Right Hand	280403–13200	N/A
3658mm	Left Hand	280403–14400	N/A
	Right Hand	280403–14400	N/A
3962mm	Left Hand	280401–07500	280401–08100
	Right Hand	280402–07500	280402–08100
4267mm	Left Hand	280401–07500	280401–09300
	Right Hand	280402–07500	280402–09300
4572mm	Left hand	280401–07500	280401–10500
	Right Hand	280402–07500	280402–10500
4877mm	Left Hand	280401–07500	280401–11700
	Right Hand	280402–07500	280402–11700
5182mm	Left Hand	280401–07500	280401–12900
	Right Hand	280402–07500	280402–12900
5486mm	Left Hand	280401–07500	280401–14100
	Right Hand	280402–07500	280402–14100

Service Parts

–05 38mm Aluminum Side

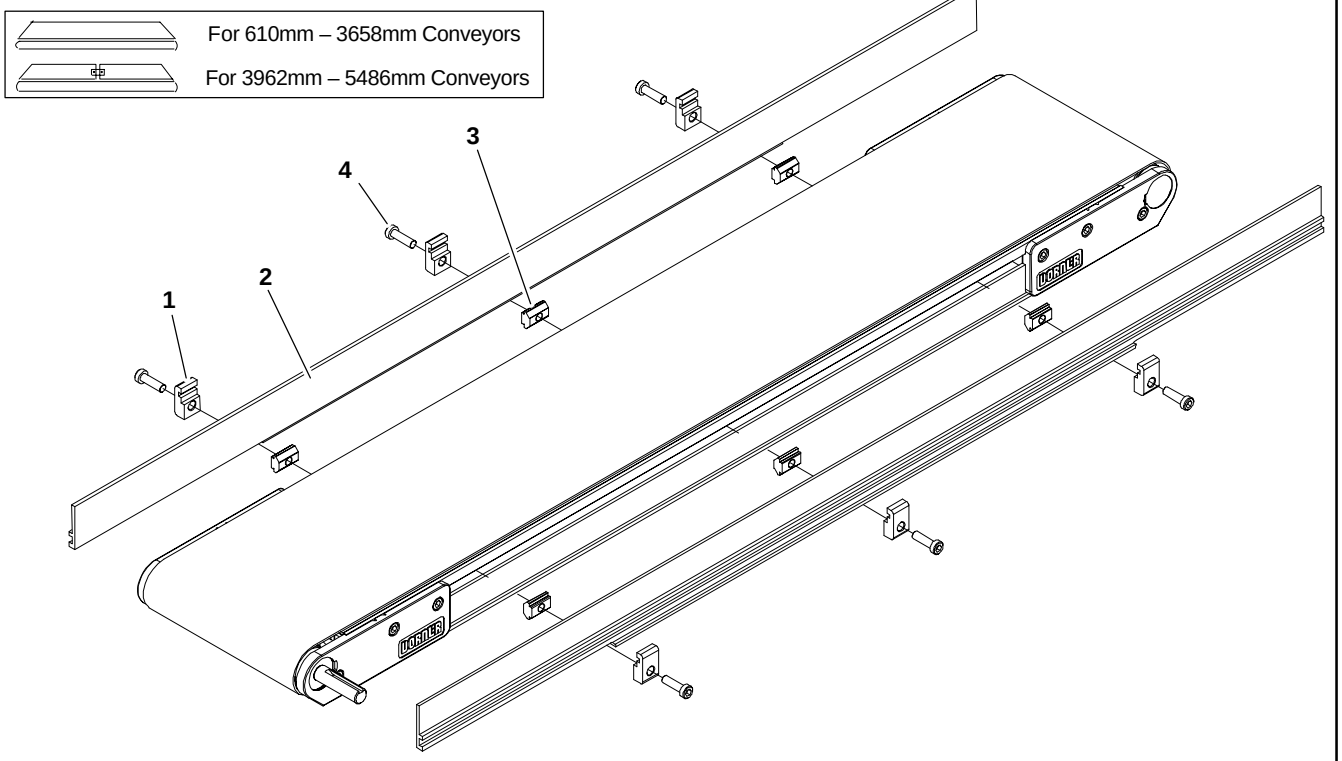

Item	Part Number	Description
1	200121	Guide Retaining Clip
2	See Chart Below	2200 Guide 13mm HS
3	639971M	Single Drop–in Tee Bar
4	920694M	Socket Head Screw M6 x 20mm

Item 2: 2200 Guide 13mm HS			
Length		End Guide	End Guide
610mm	Left Hand	280503–02400	N/A
	Right Hand	280503–02400	N/A
914mm	Left Hand	280503–03600	N/A
	Right Hand	280503–03600	N/A
1219mm	Left Hand	280503–04800	N/A
	Right Hand	280503–04800	N/A
1524mm	Left Hand	280503–06000	N/A
	Right Hand	280503–06000	N/A
1829mm	Left Hand	280503–07200	N/A
	Right Hand	280503–07200	N/A
2134mm	Left Hand	280503–08400	N/A
	Right Hand	280503–08400	N/A
2438mm	Left Hand	280503–09600	N/A
	Right Hand	280503–09600	N/A
2743mm	Left Hand	280503–10800	N/A
	Right Hand	280503–10800	N/A
3048mm	Left Hand	280503–12000	N/A
	Right Hand	280503–12000	N/A
3353mm	Left Hand	280503–13200	N/A
	Right Hand	280503–13200	N/A
3658mm	Left Hand	280503–14400	N/A
	Right Hand	280503–14400	N/A
3962mm	Left Hand	280501–07500	280501–08100
	Right Hand	280502–07500	280502–08100
4267mm	Left Hand	280501–07500	280501–09300
	Right Hand	280502–07500	280502–09300
4572mm	Left hand	280501–07500	280501–10500
	Right Hand	280502–07500	280502–10500
4877mm	Left Hand	280501–07500	280501–11700
	Right Hand	280502–07500	280502–11700
5182mm	Left Hand	280501–07500	280501–12900
	Right Hand	280502–07500	280502–12900
5486mm	Left Hand	280501–07500	280501–14100
	Right Hand	280502–07500	280502–14100

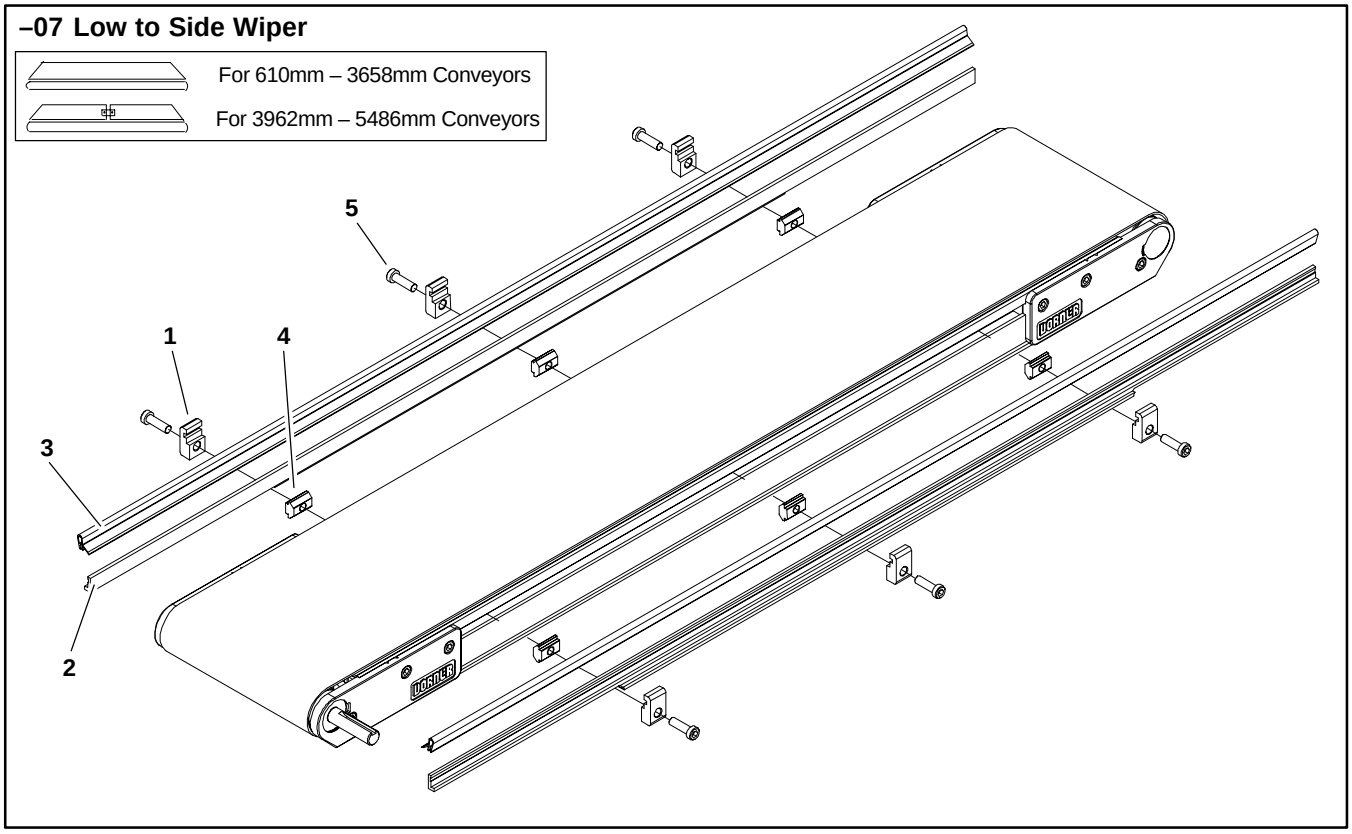

Item	Part Number	Description
1	200121	Guide Retaining Clip
2	See Chart Below	2200 Guide 13mm HS
3	41–00–24	Side Wiper Nylatron (per foot)
4	639971M	Single Drop–in Tee Bar
5	920694M	Socket Head Screw M6 x 20mm

Item 2: 2200 Guide .5” (13mm) HS			
Length		End Guide	End Guide
610mm	Left Hand	280903–02400	N/A
	Right Hand	280903–02400	N/A
914mm	Left Hand	280903–03600	N/A
	Right Hand	280903–03600	N/A
1219mm	Left Hand	280903–04800	N/A
	Right Hand	280903–04800	N/A
1524mm	Left Hand	280903–06000	N/A
	Right Hand	280903–06000	N/A
1829mm	Left Hand	280903–07200	N/A
	Right Hand	280903–07200	N/A
2134mm	Left Hand	280903–08400	N/A
	Right Hand	280903–08400	N/A
2438mm	Left Hand	280903–09600	N/A
	Right Hand	280903–09600	N/A
2743mm	Left Hand	280903–10800	N/A
	Right Hand	280903–10800	N/A
3048mm	Left Hand	280903–12000	N/A
	Right Hand	280903–12000	N/A
3353mm	Left Hand	280903–13200	N/A
	Right Hand	280903–13200	N/A
3658mm	Left Hand	280903–14400	N/A
	Right Hand	280903–14400	N/A
3962mm	Left Hand	280901–07500	280901–08100
	Right Hand	280902–07500	280902–08100
4267mm	Left Hand	280901–07500	280901–09300
	Right Hand	280902–07500	280902–09300
4572mm	Left hand	280901–07500	280901–10500
	Right Hand	280902–07500	280902–10500
4877mm	Left Hand	280901–07500	280901–11700
	Right Hand	280902–07500	280902–11700
5182mm	Left Hand	280901–07500	280901–12900
	Right Hand	280902–07500	280902–12900
5486mm	Left Hand	280901–07500	280901–14100
	Right Hand	280902–07500	280902–14100

Service Parts

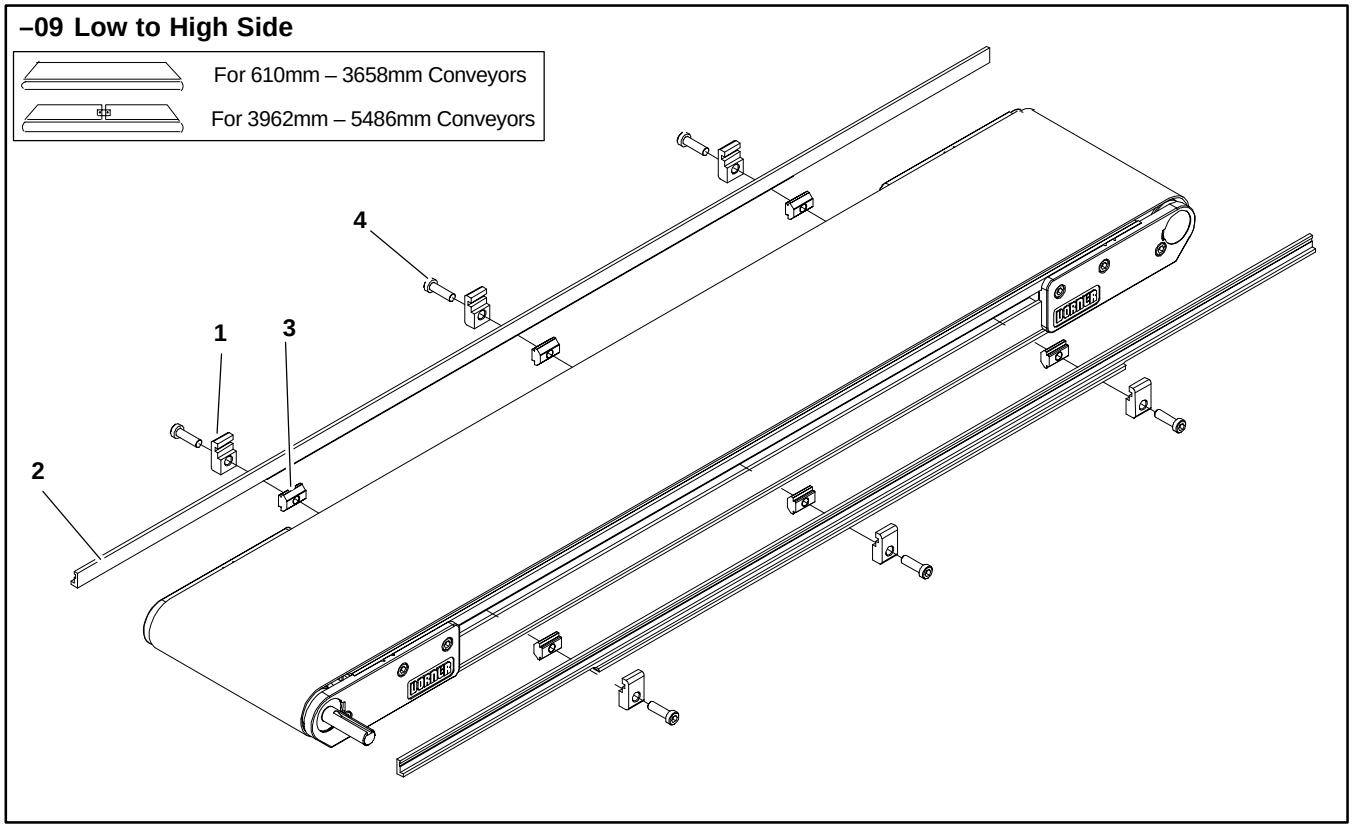

Item	Part Number	Description
1	200121	Guide Retaining Clip
2	See Chart Below	2200 Guide 13mm HS
3	639971M	Single Drop–in Tee Bar
4	920694M	Socket Head Screw M6 x 20mm

Item 2: 2200 Guide 13mm HS			
Length		End Guide	End Guide
610mm	Left Hand	280903–02400	N/A
	Right Hand	280903–02400	N/A
914mm	Left Hand	280903–03600	N/A
	Right Hand	280903–03600	N/A
1219mm	Left Hand	280903–04800	N/A
	Right Hand	280903–04800	N/A
1524mm	Left Hand	280903–06000	N/A
	Right Hand	280903–06000	N/A
1829mm	Left Hand	280903–07200	N/A
	Right Hand	280903–07200	N/A
2134mm	Left Hand	280903–08400	N/A
	Right Hand	280903–08400	N/A
2438mm	Left Hand	280903–09600	N/A
	Right Hand	280903–09600	N/A
2743mm	Left Hand	280903–10800	N/A
	Right Hand	280903–10800	N/A
3048mm	Left Hand	280903–12000	N/A
	Right Hand	280903–12000	N/A
3353mm	Left Hand	280903–13200	N/A
	Right Hand	280903–13200	N/A
3658mm	Left Hand	280903–14400	N/A
	Right Hand	280903–14400	N/A
3962mm	Left Hand	280901–07500	280901–08100
	Right Hand	280902–07500	280902–08100
4267mm	Left Hand	280901–07500	280901–09300
	Right Hand	280902–07500	280902–09300
4572mm	Left hand	280901–07500	280901–10500
	Right Hand	280902–07500	280902–10500
4877mm	Left Hand	280901–07500	280901–11700
	Right Hand	280902–07500	280902–11700
5182mm	Left Hand	280901–07500	280901–12900
	Right Hand	280902–07500	280902–12900
5486mm	Left Hand	280901–07500	280901–14100
	Right Hand	280902–07500	280902–14100

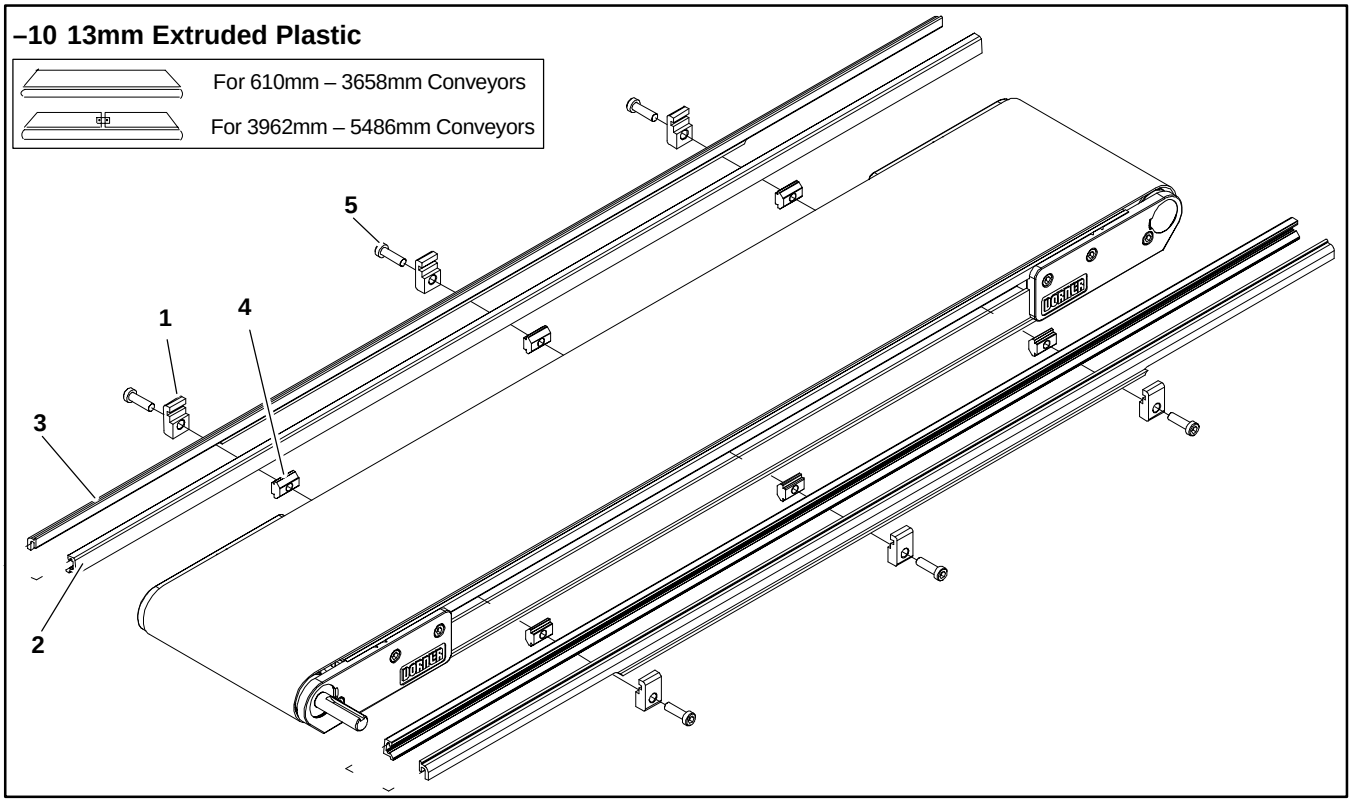

Item	Part Number	Description
1	200121	Guide Retaining Clip
2	200054P	Snap–On Guide (per foot)
3	See Chart Below	2200 Guide
4	639971M	Single Drop–in Tee Bar
5	920694M	Socket Head Screw M6 x 20mm

Item 3: 2200 Guide			
Length		End Guide	End Guide
610mm	Left Hand	281003–02400	N/A
	Right Hand	281003–02400	N/A
914mm	Left Hand	281003–03600	N/A
	Right Hand	281003–03600	N/A
1219mm	Left Hand	281003–04800	N/A
	Right Hand	281003–04800	N/A
1524mm)	Left Hand	281003–06000	N/A
	Right Hand	281003–06000	N/A
1829mm	Left Hand	281003–07200	N/A
	Right Hand	281003–07200	N/A
2134mm	Left Hand	281003–08400	N/A
	Right Hand	281003–08400	N/A
2438mm	Left Hand	281003–09600	N/A
	Right Hand	281003–09600	N/A
2743mm	Left Hand	281003–10800	N/A
	Right Hand	281003–10800	N/A
3048mm	Left Hand	281003–12000	N/A
	Right Hand	281003–12000	N/A
3353mm	Left Hand	281003–13200	N/A
	Right Hand	281003–13200	N/A
3658mm	Left Hand	281003–14400	N/A
	Right Hand	281003–14400	N/A
3962mm	Left Hand	281001–07500	281001–08100
	Right Hand	281002–07500	281002–08100
4267mm	Left Hand	281001–07500	281001–09300
	Right Hand	281002–07500	281002–09300
4572mm	Left hand	281001–07500	281001–10500
	Right Hand	281002–07500	281002–10500
4877mm	Left Hand	281001–07500	281001–11700
	Right Hand	281002–07500	281002–11700
5182mm	Left Hand	281001–07500	281001–12900
	Right Hand	281002–07500	281002–12900
5486mm	Left Hand	281001–07500	281001–14100
	Right Hand	281002–07500	281002–14100

–13 Adjustable Guiding

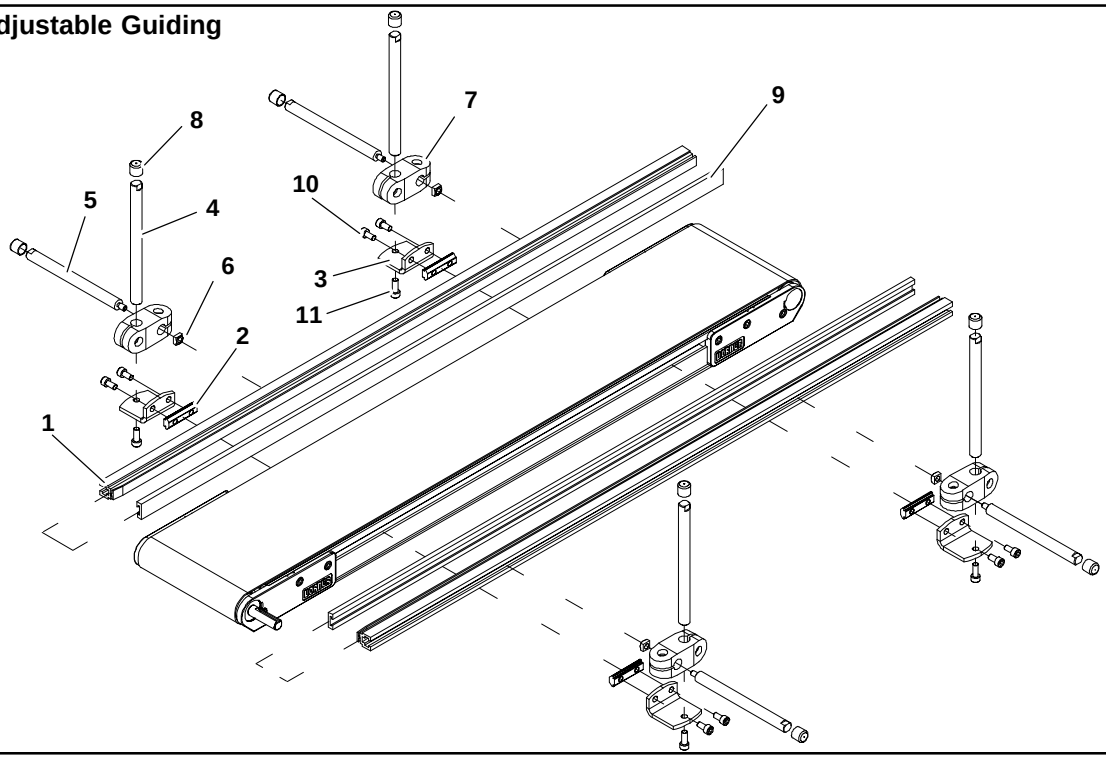

Item	Part Number	Description
1	202983	Aluminum Profile Guide 610mm
	202984	Aluminum Profile Guide 914mm
	202985	Aluminum Profile Guide 1219mm
	202986	Aluminum Profile Guide 1524mm
	202987	Aluminum Profile Guide 1829mm
	202988	Aluminum Profile Guide 2134mm
	202989	Aluminum Profile Guide 2438mm
	202990	Aluminum Profile Guide 2743mm
	202991	Aluminum Profile Guide 3048mm
	202992	Aluminum Profile Guide 3353mm
	202993	Aluminum Profile Guide 3658mm
	202994	Aluminum Profile Guide 3962mm

2	200830M	Drop–In Tee Bar
3	202004	Mounting Bracket
4	202027M	Guide Mounting Shaft Vertical
5	202028M	Guide Moutning Shaft Horizontal
6	674175MP	Square Nut
7	807–652	Cross Block
8	807–948	Vinyl Shaft Cap
9	614068P	Flat Extruded Guide (per foot)
10	920612M	Socket Head Screw M6 x 12mm
11	920616M	Socket Head Screw M6 x 16mm

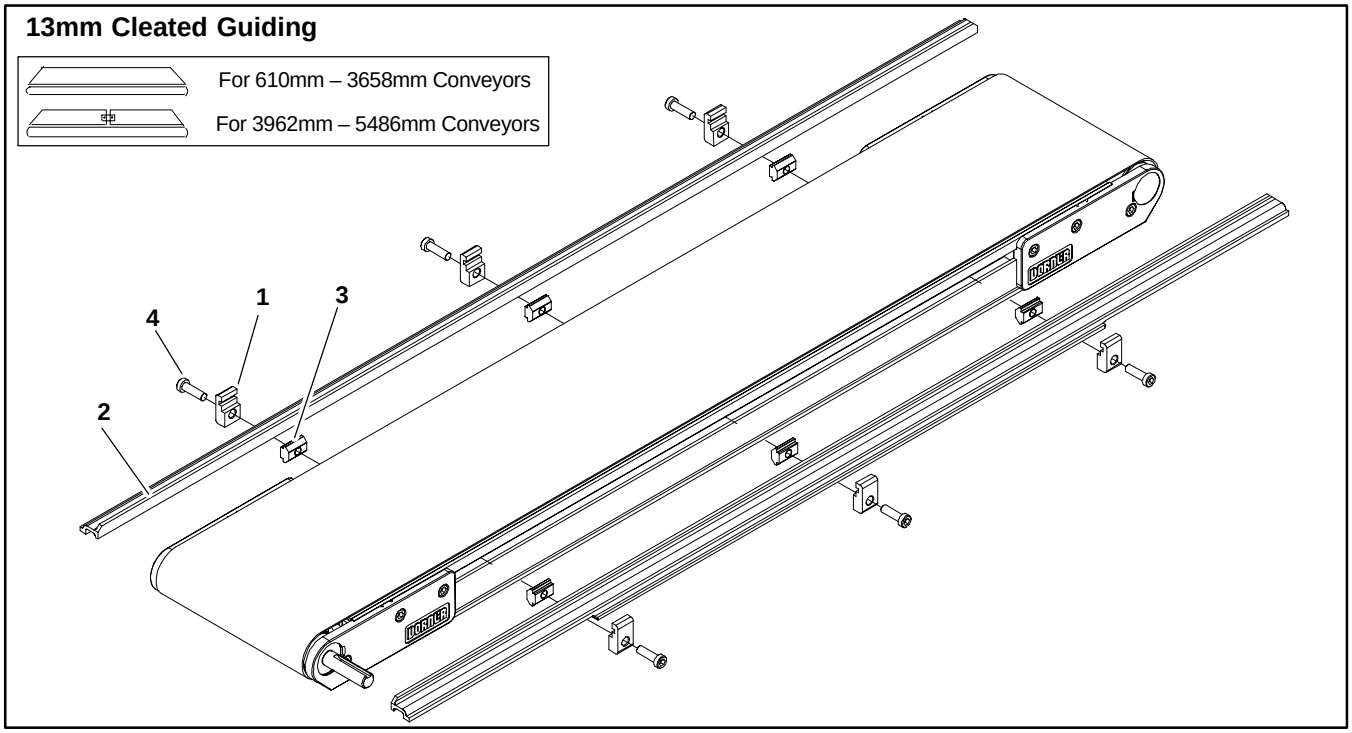

Item	Part Number	Description
1	200121	Guide Retaining Clip
2	See Chart Below	2200 Guide 13mm Cleated
3	639971M	Drop–In Tee Bar
4	920694M	Socket Head Screw M6 x 20mm

Item 2: 2200 Guide			
Length		End Guide	End Guide
610mm	Left Hand	281603–02256	N/A
	Right Hand	281603–02256	N/A
914mm	Left Hand	281603–03456	N/A
	Right Hand	281603–03456	N/A
1219mm	Left Hand	281603–04656	N/A
	Right Hand	281603–04656	N/A
1524mm	Left Hand	281603–05856	N/A
	Right Hand	281603–05856	N/A
1829mm	Left Hand	281603–07056	N/A
	Right Hand	281603–07056	N/A
2134mm	Left Hand	281603–08256	N/A
	Right Hand	281603–08256	N/A
2438mm	Left Hand	281603–09456	N/A
	Right Hand	281603–09456	N/A
2743mm	Left Hand	281603–10656	N/A
	Right Hand	281603–10656	N/A
3048mm	Left Hand	281603–11856	N/A
	Right Hand	281603–11856	N/A
3353mm	Left Hand	281603–13056	N/A
	Right Hand	281603–13056	N/A
3658mm	Left Hand	281603–14256	N/A
	Right Hand	281603–14256	N/A
3962mm	Left Hand	281601–07428	281601–08028
	Right Hand	281602–07428	281602–08028
4267mm	Left Hand	281601–07428	281601–09228
	Right Hand	281602–07428	281602–09228
4572mm	Left hand	281601–07428	281601–10428
	Right Hand	281602–07428	281602–10428
4877mm	Left Hand	281601–07428	281601–11628
	Right Hand	281602–07428	281602–11628
5182mm	Left Hand	281601–07428	281601–12828
	Right Hand	281602–07428	281602–12828
5486mm	Left Hand	281601–07428	281601–14028
	Right Hand	281602–07428	281602–14028

Service Parts

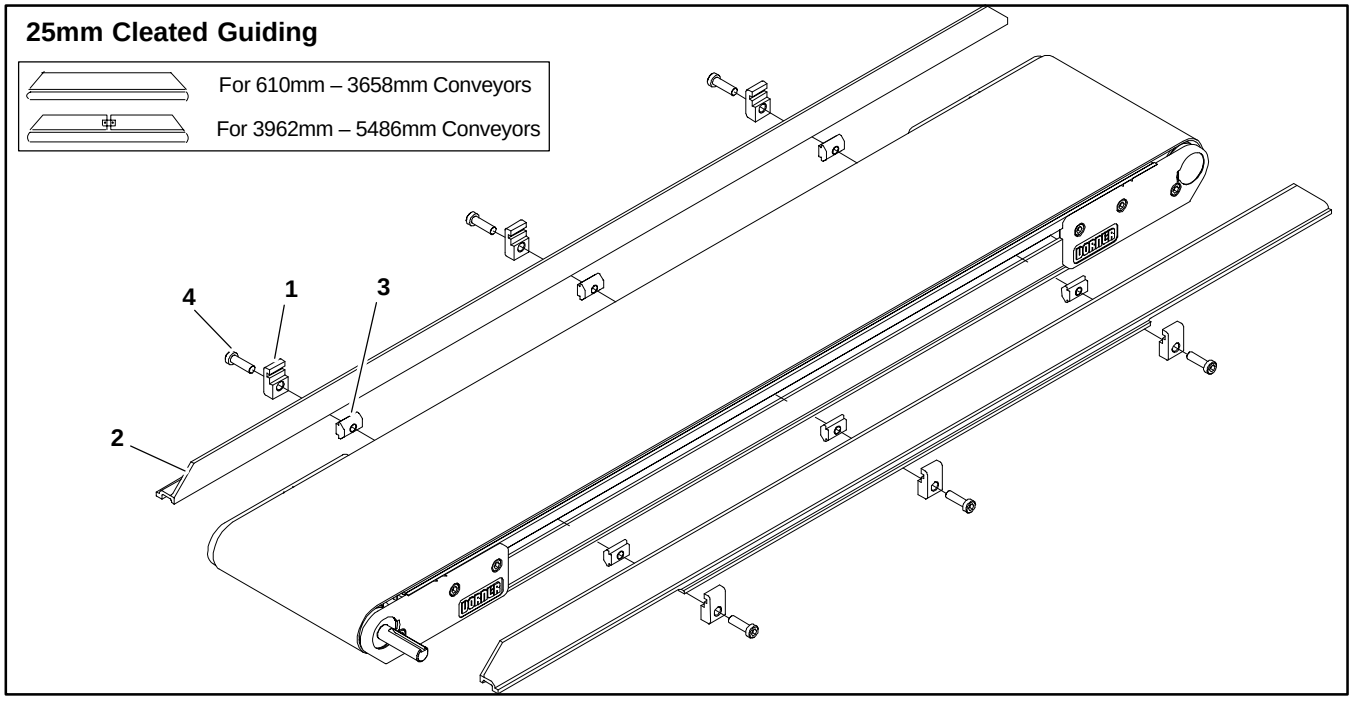

Item	Part Number	Description
1	200121	Guide Retaining Clip
2	See Chart Below	2200 Guide 1” (25mm) Cleated
3	639971M	Drop–In Tee Bar
4	920694M	Socket Head Screw M6 x 20mm

Item 2: 2200 Guide			
Length		End Guide	End Guide
610mm	Left Hand	281703–02256	N/A
	Right Hand	281703–02256	N/A
914mm	Left Hand	281703–03456	N/A
	Right Hand	281703–03456	N/A
1219mm	Left Hand	281703–04656	N/A
	Right Hand	281703–04656	N/A
1524mm	Left Hand	281703–05856	N/A
	Right Hand	281703–05856	N/A
1829mm	Left Hand	281703–07056	N/A
	Right Hand	281703–07056	N/A
2134mm	Left Hand	281703–08256	N/A
	Right Hand	281703–08256	N/A
2438mm	Left Hand	281703–09456	N/A
	Right Hand	281703–09456	N/A
2743mm	Left Hand	281703–10656	N/A
	Right Hand	281703–10656	N/A
3048mm	Left Hand	281703–11856	N/A
	Right Hand	281703–11856	N/A
3353mm	Left Hand	281703–13056	N/A
	Right Hand	281703–13056	N/A
3658mm	Left Hand	281703–14256	N/A
	Right Hand	281703–14256	N/A
3962mm	Left Hand	281701–07428	281701–08028
	Right Hand	281702–07428	281702–08028
4267mm	Left Hand	281701–07428	281701–09228
	Right Hand	281702–07428	281702–09228
4572mm	Left hand	281701–07428	281701–10428
	Right Hand	281702–07428	281702–10428
4877mm	Left Hand	281701–07428	281701–11628
	Right Hand	281702–07428	281702–11628
5182mm	Left Hand	281701–07428	281701–12828
	Right Hand	281702–07428	281702–12828
5486mm	Left Hand	281701–07428	281701–14028
	Right Hand	281702–07428	281702–14028

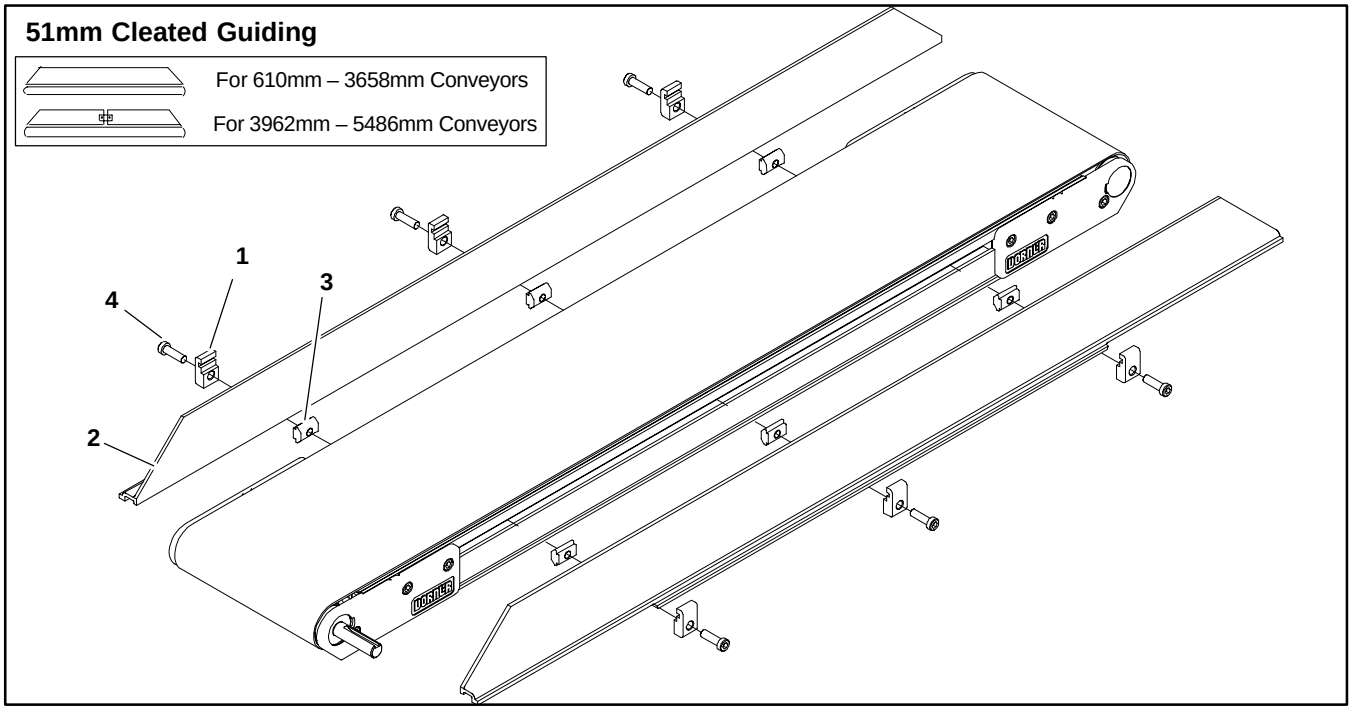

Item	Part Number	Description
1	200121	Guide Retaining Clip
2	See Chart Below	2200 Guide 51mm Cleated
3	639971M	Drop–In Tee Bar
4	920694M	Socket Head Screw M6 x 20mm

Item 2: 2200 Guide			
Length		End Guide	End Guide
610mm	Left Hand	281903–02256	N/A
	Right Hand	281903–02256	N/A
914mm	Left Hand	281903–03456	N/A
	Right Hand	281903–03456	N/A
1219mm	Left Hand	281903–04656	N/A
	Right Hand	281903–04656	N/A
1524mm	Left Hand	281903–05856	N/A
	Right Hand	281903–05856	N/A
1829mm	Left Hand	281903–07056	N/A
	Right Hand	281903–07056	N/A
2134mm	Left Hand	281903–08256	N/A
	Right Hand	281903–08256	N/A
2438mm	Left Hand	281903–09456	N/A
	Right Hand	281903–09456	N/A
2743mm	Left Hand	281903–10656	N/A
	Right Hand	281903–10656	N/A
3048mm	Left Hand	281903–11856	N/A
	Right Hand	281903–11856	N/A
3353mm	Left Hand	281903–13056	N/A
	Right Hand	281903–13056	N/A
3658mm	Left Hand	281903–14256	N/A
	Right Hand	281903–14256	N/A
3962mm	Left Hand	281901–07428	281901–08028
	Right Hand	281902–07428	281902–08028
4267mm	Left Hand	281901–07428	281901–09228
	Right Hand	281902–07428	281902–09228
4572mm	Left hand	281901–07428	281901–10428
	Right Hand	281902–07428	281902–10428
4877mm	Left Hand	281901–07428	281901–11628
	Right Hand	281902–07428	281902–11628
5182mm	Left Hand	281901–07428	281901–12828
	Right Hand	281902–07428	281902–12828
5486mm	Left Hand	281901–07428	281901–14028
	Right Hand	281902–07428	281902–14028

Service Parts

Flared Side Guiding

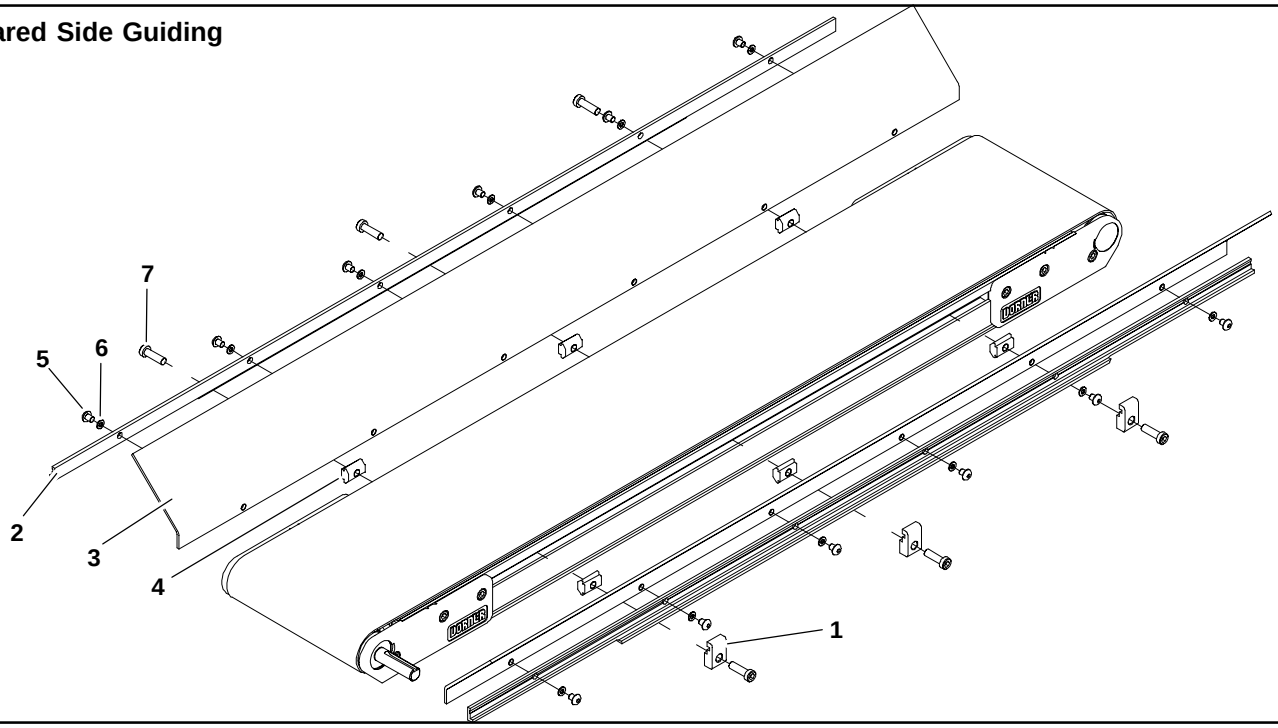

Item	Part Number	Description
1	200121	Guide Retaining Clip
2	202212	Side–Flare Mounting Guide 610mm
	202213	Side–Flare Mounting Guide 914mm
	202214	Side–Flare Mounting Guide 1219mm
	202215	Side–Flare Mounting Guide 1524mm
	202216	Side–Flare Mounting Guide 1829mm

3	202522M	Flared Guide 45 610mm
	202523M	Flared Guide 45 914mm
	202523M	Flared Guide 45 1219mm
	202523M	Flared Guide 45 1524mm
	202523M	Flared Guide 45 1829mm
4	639971	Drop–InTee Bar
5	910506M	Button Head Screw M5 x 6mm
6	911–512	Washer
7	920694M	Cap Low–Head Screw M6 x 20mm

Flat Belt Mounting Brackets

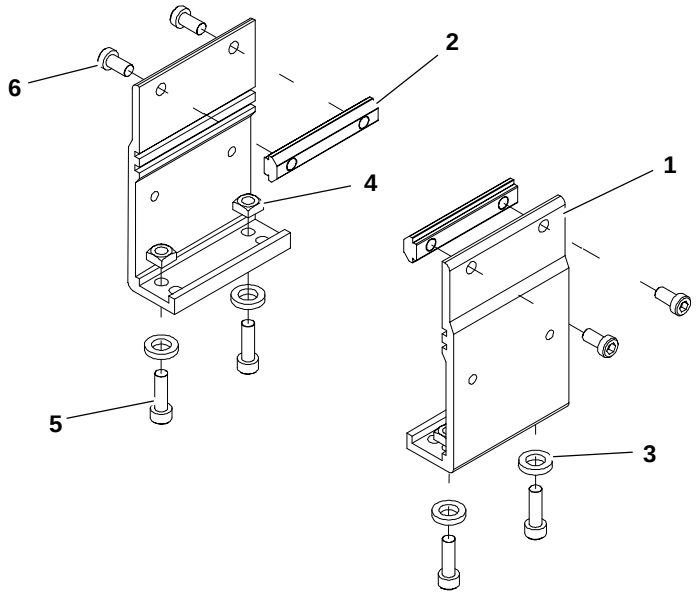

Item	Part Number	Description
1	240831	Stand Mount
2	300150M	Drop–In Tee Bar
3	605279P	Washer
4	807–920	Square Nut M6 5mm x 10mm
5	920620M	Socket Head Screw M6 x 20mm
6	920692M	Socket Head Screw M6 x 12mm

Cleated Belt Mounting Brackets

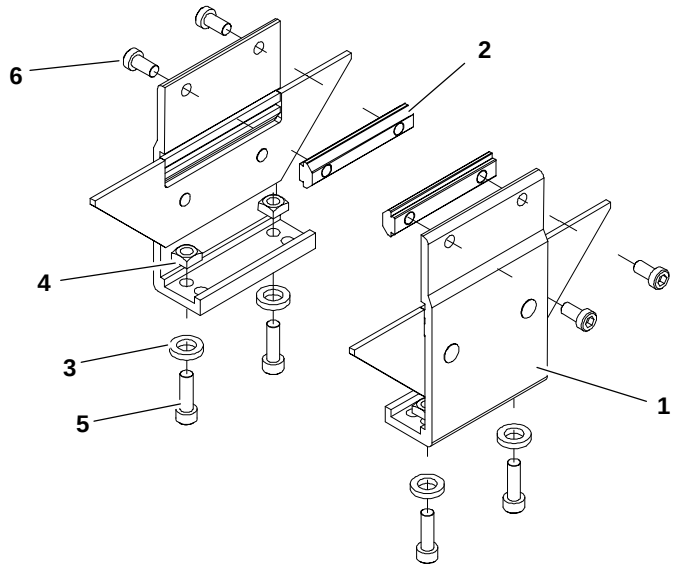

Item	Part Number	Description
1	240836	Cleated Mounting Assembly
2	300150M	Drop–In Tee Bar
3	605279P	Washer
4	807–920	Square Nut M6 5mm x 10mm
5	920620M	Socket Head Screw M6 x 20mm
6	920692M	Socket Head Screw M6 x 12mm

Flat Belt Mounting Brackets for 610mm Conveyors

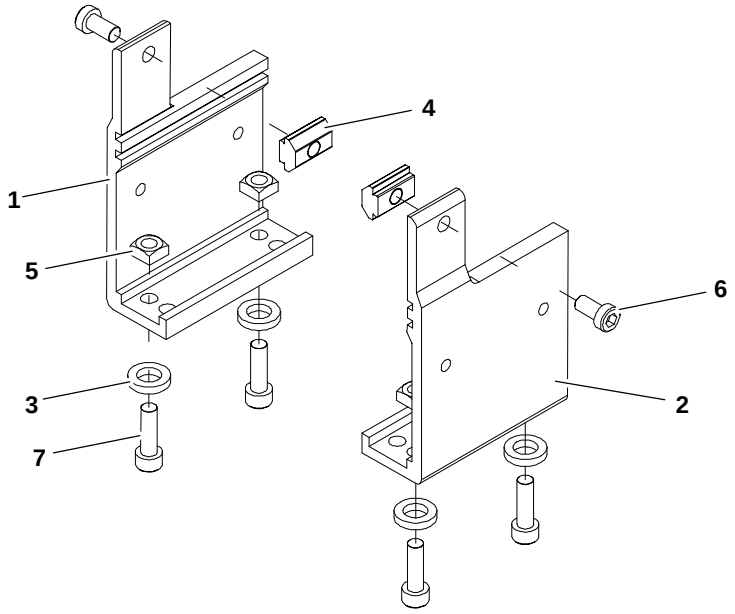

Item	Part Number	Description
1	240833	Stand Mount, LH 610mm)
2	240834	Stand Mount, RH 610mm
3	605279P	Washer
4	639971M	Drop–In Tee Bar
5	807–920	Square Nut M6 5mm x 10mm
6	920620M	Socket Head Screw M6 x 20mm
7	920692M	Socket Head Screw M6 x 12mm

Cleated Belt Mounting Brackets for 610mm Conveyors

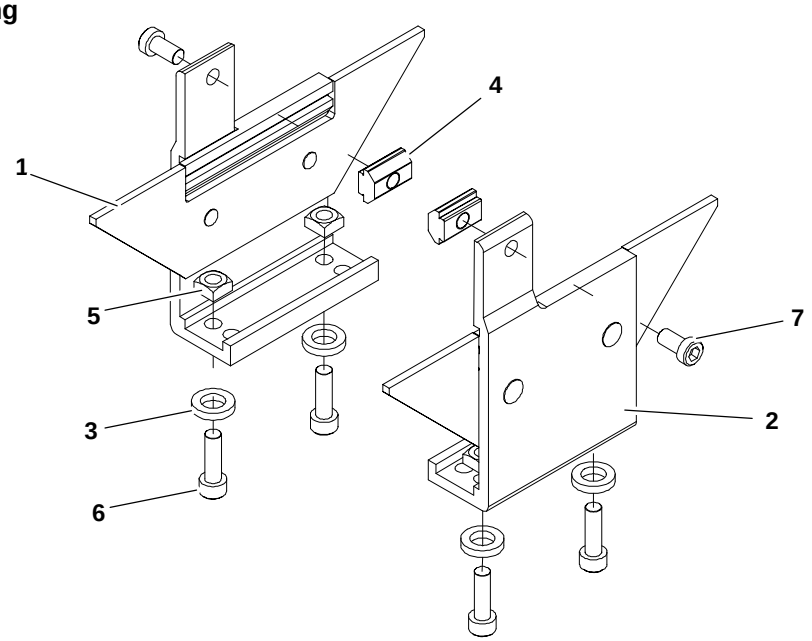

Item	Part Number	Description
1	240852	Cleated Stand Bracket Assembly LH 610mm Conveyor
2	240853	Cleated Stand Bracket Assembly RH 610mm Conveyor
3	605279P	Washer
4	639971M	Drop–In Tee Bar
5	807–920	Square Nut M6 5mm x 10mm
6	920620M	Socket Head Screw M6 x 20mm
7	920692M	Socket Head Screw M6 x 12mm

Connecting Assembly without Stand Mount

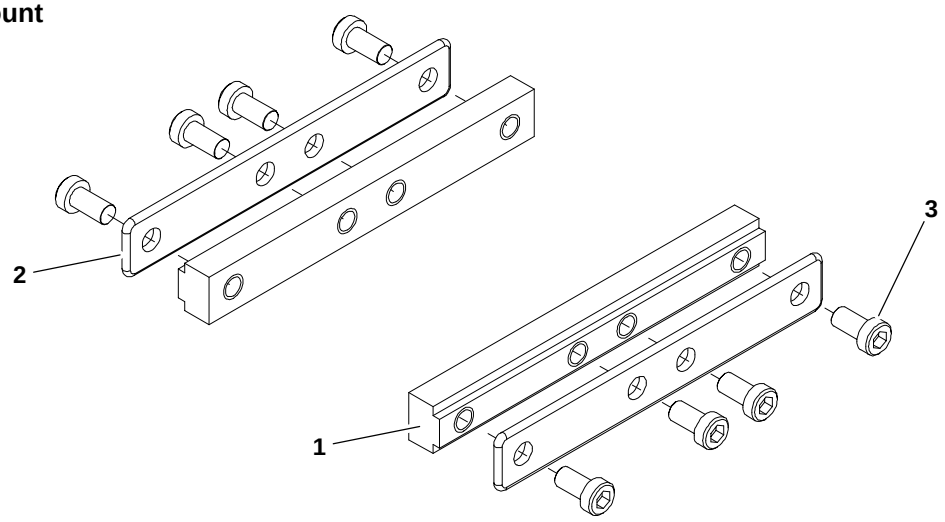

Item	Part Number	Description
1	240331	Frame Bar Connector
2	300153M	Intermediate Clamp Plate
3	920692M	Socket Head Screw M6 x 12mm

Flat Belt Connecting Assembly with Stand Mount

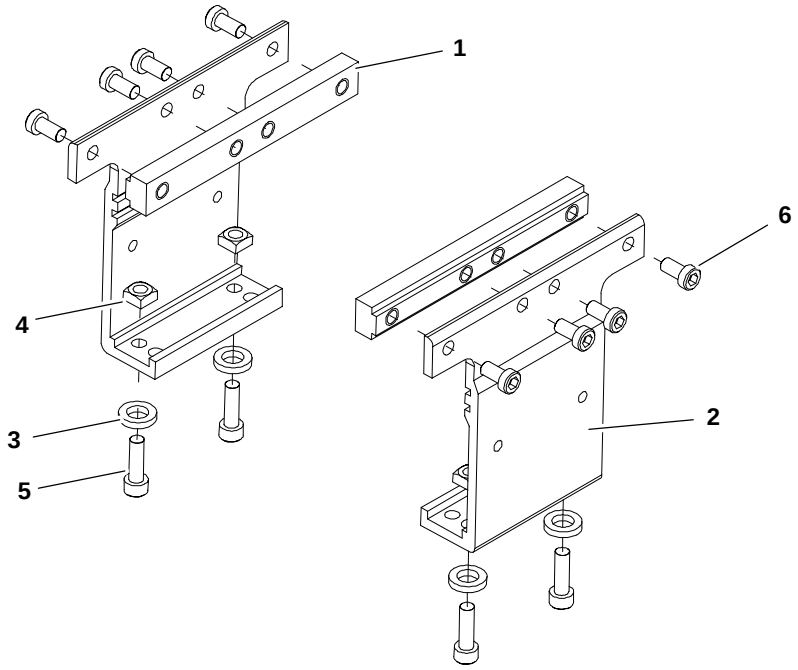

Item	Part Number	Description
1	240331	Frame Connector Bar
2	240837	Stand Mount Joint
3	605279P	Washer
4	807–920	Square Nut M6 5mm x 10mm
5	920620M	Socket Head Screw M6 x 20mm
6	920692M	Socket Head Screw M6 x 12mm

Cleated Belt Connecting Assembly with Stand Mount

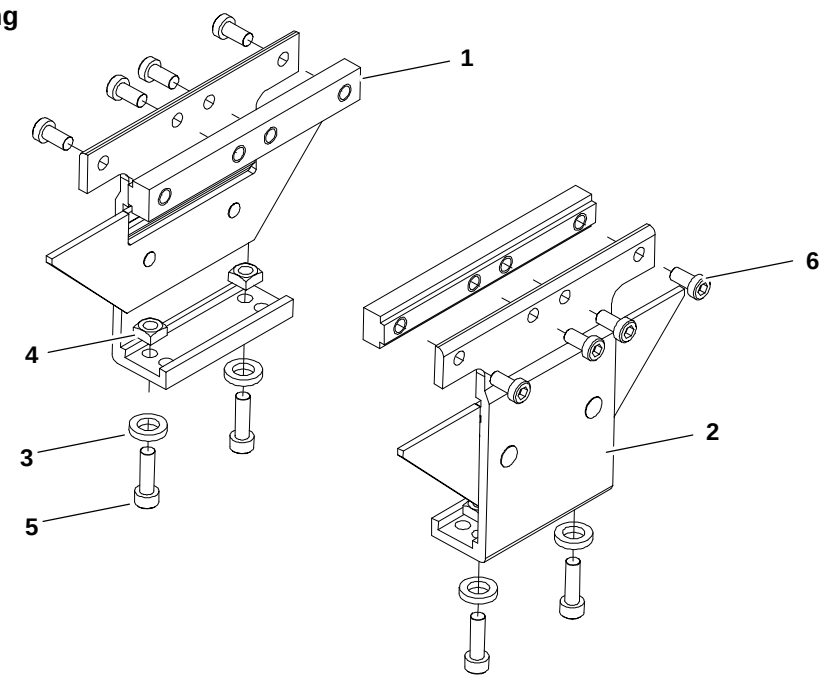

Item	Part Number	Description
1	240331	Frame Connector Bar
2	240846	Cleat Stand Bracket Assembly
3	605279P	Washer
4	807–920	Square Nut M6 5mm x 10mm
5	920620M	Socket Head Screw M6 x 20mm
6	920692M	Socket Head Screw M6 x 12mm

51mm to 152mm Flat Belt Return Roller

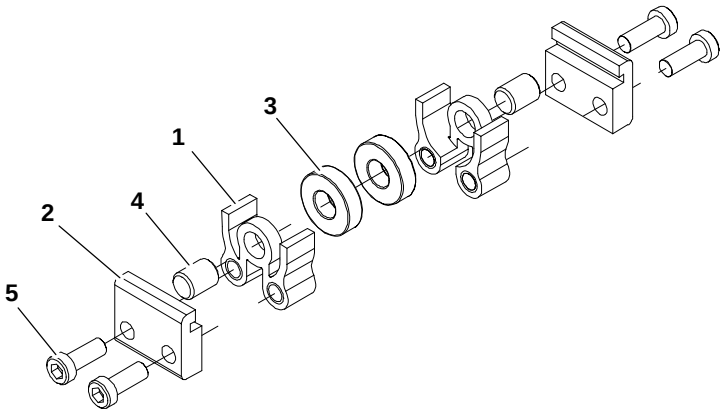

Item	Part Number	Description
1	240825	Short Return Roller Guard
2	240827	Return Roller Clip
3	802–123	Bearing
4	913–100	Dowel Pin
5	920693M	Socket Head Screw M6 x 16mm

203mm to 610mm Flat Belt Return Roller

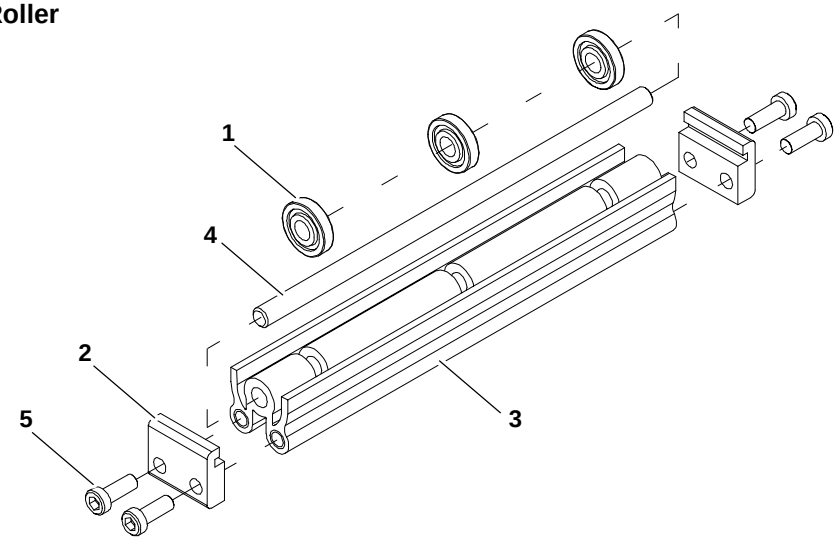

Item	Part Number	Description
1	240826	Return Roller
2	240827	Return Roller Clip
3	240908	Return Roller Guard 203mm
	240910	Return Roller Guard 254mm
	240912	Return Roller Guard 305mm
	240918	Return Roller Guard 457mm
	240921	Return Roller Guard 533mm
	240924	Return Roller Guard 610mm

4	241008	Return Roller Rod 203mm
	241010	Return Roller Rod 254mm
	241012	Return Roller Rod 305mm
	241018	Return Roller Rod 457mm
	241021	Return Roller Rod 533mm
	241024	Return Roller Rod 610mm
5	920693M	Socket Head Screw M6 x 16mm

Cleated Belt Return Roller

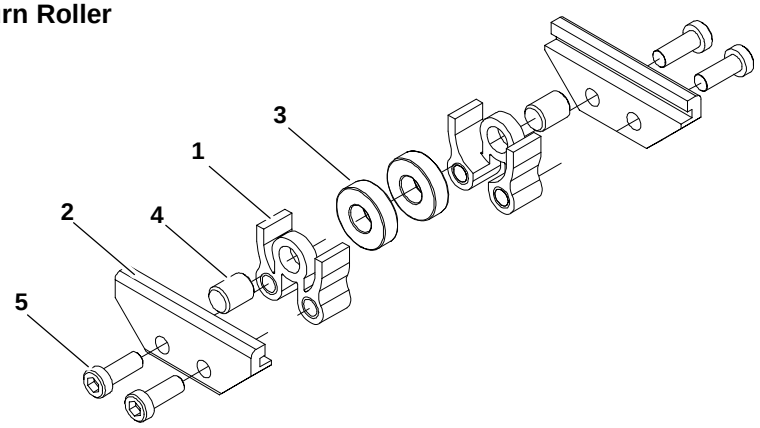

Item	Part Number	Description
1	240825	Short Return Roller Guard
2	240828	Cleated Return Roller Clip

3	802–123	Bearing
4	913–100	Dowel Pin
5	920693M	Socket Head Screw M6 x 16mm

Conveyor Belt Part Number Configuration

Flat Belt Conveyor Model Number — **210 U WW LLLL A PP BB**

Cleated Belt Conveyor Model Number — **24 C U WW LLLL A SSSS**

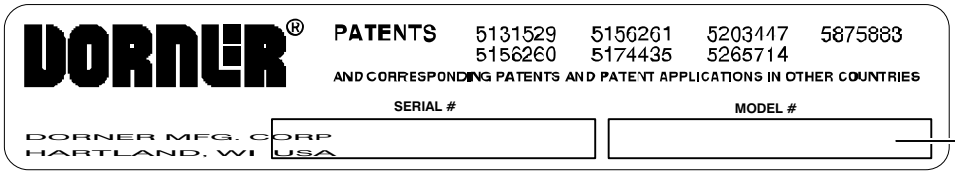

Figure 50

Flat Belt Part Number Configuration

Refer to Dorner patent plate (Figure 50). From the model number, determine conveyor width ("WW"), length ("LLLL") and belt type ("BB"). Use data to configure belt part number as indicated below. *****Add "V" for V-guided belts.

22 - WW LLLL / BB V *

22- _____(Fill In)_____ **/** _____ **V ***

Cleated Belt Part Number Configuration

Refer to Dorner patent plate (Figure 50). From the model number, determine conveyor width ("WW"), length ("LLLL"), cleat type ("C") and cleat spacing ("SSSS"). Use data to configure belt part number as indicated below. *****Add "V" for V-guided belts.

22 - WW LLLL C SSSS V *

22-_____ _____(Fill In)_____ __ _____ **V ***

Notes

Return Policy

No returns will be accepted without prior written factory authorization. When calling for authorization, please have the following information ready for the Dorner Factory representative or your local distributor:

1. Name and address of customer.
2. Item(s) being returned.
3. Reason for return.
4. Customer's original order number used when ordering the item(s).
5. Dorner or distributor invoice number.

A representative will discuss action to be taken on the Returned items and provide a Returned Goods Authorization Number to reference.

There will be a 15% restocking charge on all new items returned for credit where Dorner was not at fault. These will not be accepted after 60 days from original invoice date. The restocking charge covers inspection, cleaning, disassembly, and reissuing to inventory.

If a replacement is needed prior to evaluation of returned item, a purchase order must be issued. Credit (if any) is issued only after return and evaluation is complete.

Dorner has representatives throughout the world. Feel free to contact Dorner for the name of your local representative. Our technical sales and service staff will gladly help with your questions on Dorner products.

For a copy of Dorner's Limited Warranty, contact factory, distributor, service center or visit our website at www.dorner.com.

For replacement parts, contact an authorized Dorner Service Center or the factory.

Dorner Mfg. Corp. reserves the right to change or discontinue products without notice. All products and services are covered in accordance with our standard warranty. All rights reserved. ©Dorner Mfg. Corp. 2000

DORNER MFG. CORP.
975 Cottonwood Ave., PO Box 20
Hartland, WI 53029-0020 USA
USA
TEL 1-800-397-8664 (USA)
FAX 1-800-369-2440 (USA)
Outside the USA:
TEL 1-262-367-7600, FAX 1-262-367-5827

DORNER
Arnold-Sommerfeld-Ring 2
D-52499 Baesweiler
Germany
TEL (02401) 80 52 90
FAX (02401) 80 52 93

Internet: www.dorner.com