Installation, Maintenance & Parts Manual

2200 Series Center Drive Conveyors

Table of Contents

Warnings – General Safety 2
Introduction 2
Product Description 3
Specifications 3
Installation 4
Required Tools 4
Recommended Installation Sequence 5
Conveyors Up to 13 ft (3962 mm) 5
Conveyors Longer Than 13 ft (3962 mm) 5
Mounting Brackets 6
Return Rollers 7
Preventive Maintenance & Adjustment 8
Required Tools 8
Standard Tools 8
Special Tools 8
Checklist 8
Lubrication 8
Conveyor Pulley Bearings 8
Drive Module Idler Pulley Bearings 8
Drive Module Drive Pulley Bearings 8
Return Rollers 8
Maintaining Conveyor Belt 8
Troubleshooting 8
Cleaning 8
Conveyor Belt Replacement 9
Conveyor Belt Replacement Sequence 9
Belt Removal for Conveyor Without Stands or Gearmotor Mounting Package 9
Belt Removal for Conveyor With Stands and Gearmotor Mounting Package 10
Gearmotor Mounting Package Removal 11
Drive Module Removal 12
Belt Removal from Drive Module 12
Conveyor Belt Installation 13
Conveyor Tension End Adjustment 14
Conveyor Belt Tensioning 15
Conveyor Belt Tracking 16
Pulley Removal 16
Conveyor End Pulley Removal 16
Drive Module Drive Pulley Removal 17
Drive Module Idler Pulley Removal 17
Bearing Replacement for Conveyor Pulley 18
Bearing Replacement for Drive Pulley 18
Bearing Removal 18
Bearing Installation 18
Bearing Replacement for Idler Pulleys 19
Pulley Replacement 19
Conveyor End Pulley 19
Drive Module Drive Pulley 20
Drive Module Idler Pulley 20
Bearing Replacement for Nose Bar 20
Service Parts 23
2” (51mm) Wide Conveyor Assembly 23
3” (76mm) to 6” (152mm) Wide Conveyor Assembly . . . 25
8” (203mm) to 12” (605mm) Wide Conveyor Assembly . 26
18” (457mm) to 24” (610mm) Wide Conveyor Assembly 28
5” (127mm) to 24” (610mm) Wide Center Drive Module 30
2” (51mm), 3” (76mm), 4” (102mm) Wide Center Drive Module 30
Nosebar End Assembly 2” (51mm) to 24” (610mm) 32
–04 3” (76mm) Aluminum Side 33
–05 1.5” (38mm) Aluminum Side 34
–07 Low to Side Wiper 35
–09 Low to High Side 36
–10 .5” (13mm) Extruded Plastic 37
–13 Adjustable Guiding 38
Flared Side Guiding 39
Flat Belt Mounting Brackets 40
Flat Belt Mounting Brackets for 2’ (610mm) Conveyors . 40
Connecting Assembly without Stand Mount 41
Flat Belt Connecting Assembly without Stand Mount 41
2” (51mm) to 6” (152mm) Flat Belt Return Roller 42
8” (51mm) to 24” (152mm) Flat Belt Return Roller 42
Return Policy 44

Warnings – General Safety

WARNING

The safety alert symbol, black triangle with white exclamation, is used to alert you to potential personal injury hazards.

DANGER

Climbing, sitting, walking or riding on conveyor will cause severe injury.

KEEP OFF CONVEYORS.

DANGER

DO NOT OPERATE CONVEYORS IN AN EXPLOSIVE ENVIRONMENT.

WARNING

Exposed moving parts can cause severe injury.

LOCK OUT POWER before removing guards or performing maintenance.

WARNING

Gearmotors may be HOT.

DO NOT TOUCH Gearmotors.

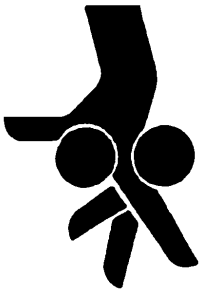

WARNING

Dorner cannot control the physical installation and application of conveyors. Taking protective measures is the responsibility of the user.

When conveyors are used in conjunction with other equipment or as part of a multiple conveyor system, CHECK FOR POTENTIAL PINCH POINTS and other mechanical hazards before system start-up.

WARNING

Loosening stand height or angle adjustment screws may cause conveyor sections to drop down, causing severe injury.

SUPPORT CONVEYOR SECTIONS PRIOR TO LOOSENING STAND HEIGHT OR ANGLE ADJUSTMENT SCREWS.

Introduction

IMPORTANT: Some illustrations may show guards removed. DO NOT operate equipment without guards.

Upon receipt of shipment:

- Compare shipment with packing slip. Contact factory regarding discrepancies.
- Inspect packages for shipping damage. Contact carrier regarding damage.
- Accessories may be shipped loose. See accessory instructions for installation.

Dorner's Limited Warranty applies.

Dorner 2200 Series conveyors are covered by Patent Numbers 5,174,435, 5,131,529, 6,298,981 and corresponding patents and patent applications in other countries.

Dorner reserves the right to make changes at any time without notice or obligation.

Product Description

Refer to Figure 1 for typical conveyor components.

Typical Components	
A	Conveyor
B	Drive Module
C	Guiding & Accessories
D	Gearmotor Mounting Package
E	Gearmotor
F	Mounting Brackets
G	Support Stand
H	Variable Speed Controller
I	Fixed End
J	Tension End

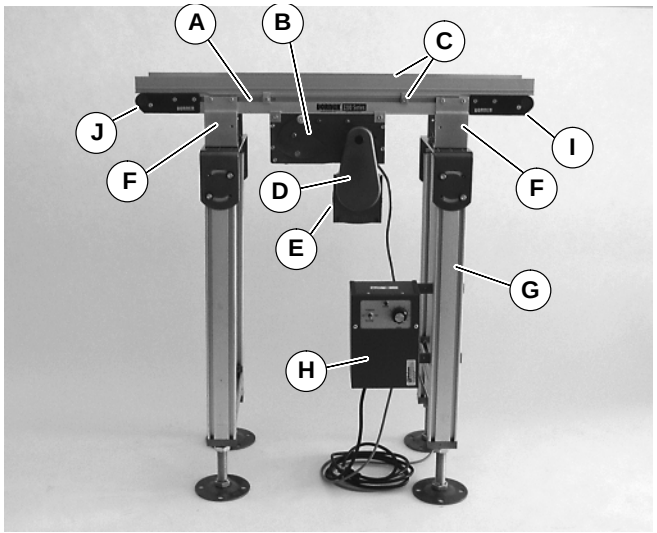

Figure 1

Specifications

Models:

2200 Series Center Drive Conveyor

2 1 5 M WW LLLL A PP BB

- **BB** — **Belt Type***
- **PP** — **Conveyor Profile***
- **A** — **Mount Position (A or D)***
- **LLLL** — **Conveyor Length Reference**
- **WW** — **Conveyor Width Reference**
- **M** — **Documentation Language: M=English**
- **1** — **Tail Type***

*** See Ordering and Specifications Catalog for details.**

Conveyor Supports:

Maximum Distances:

K = 18¨ (457 mm)

L = 6 ft (1829 mm)**

**** For conveyors longer than 13 ft (3962 mm), install support at joint.**

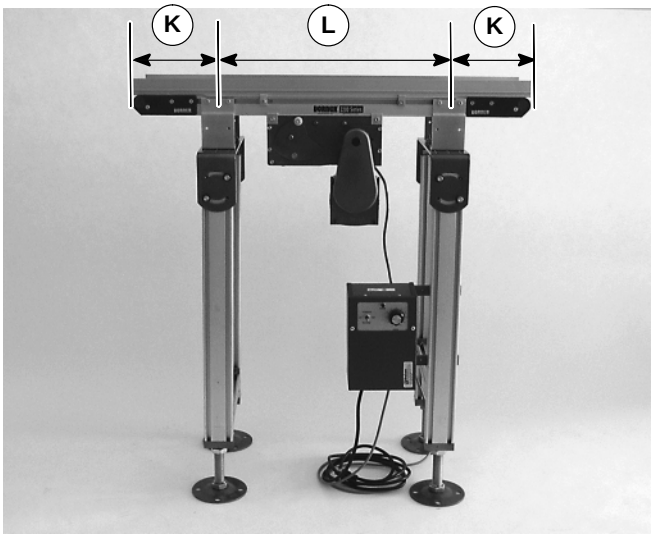

Figure 2

Specifications

Specifications:

Conveyor Width Reference (WW)	02	03	04	05	06	08	10	12	18	21	24
Conveyor Belt Width	1.75" (44 mm)	2.75" (70 mm)	3.75" (95 mm)	5" (127 mm)	6" (152 mm)	8" (203 mm)	10" (254 mm)	12" (305 mm)	18" (457 mm)	21" (533 mm)	24" (610 mm)
Maximum Conveyor Load* (See NOTE Below)	40 lb (18 kg)	50 lb (23 kg)	60 lb (27 kg)	75 lb (34 kg)	90 lb (41 kg)	105 lb (47 kg)	120 lb (54 kg)	120 lb (54 kg)	120 lb (54 kg)	120 lb (54 kg)	120 lb (54 kg)
Conveyor Start-up Torque*	9 in-lb (1.0 Nm)	10 in-lb (1.1 Nm)	11 in-lb (1.2 Nm)	12 in-lb (1.4 Nm)	15 in-lb (1.7 Nm)	20 in-lb (2.3 Nm)	23 in-lb (2.6 Nm)	25 in-lb (3.4 Nm)	30 in-lb (3.4 Nm)	35 in-lb (4.0 Nm)	35 in-lb (4.0 Nm)
Belt Travel	4.2" (107 mm) per revolution of pulley										
Maximum Belt Speed*	235 feet/minute (72 meters/minute)										
Belt Take-up	1" (25 mm) of stroke = 2" (51 mm) of belt take-up										

Conveyor Length Reference (LL)	02	03	04	05	06	07	08	09	10	11	12	13	24	14	15	16	17	18	19	20	21	22	23
Conveyor Length	2-ft (610 mm)	3-ft (914 mm)	4-ft (1219 mm)	5-ft (1524 mm)	6-ft (1829 mm)	7-ft (2134 mm)	8-ft (2438 mm)	9-ft (2743 mm)	10-ft (3048 mm)	11-ft (3353 mm)	12-ft (3658 mm)	13-ft (3962 mm)	24-ft (7315 mm)	14-ft (4267 mm)	15-ft (4572 mm)	16-ft (4877 mm)	17-ft (5182 mm)	18-ft (5486 mm)	19-ft (5791 mm)	20-ft (6096 mm)	21-ft (6401 mm)	22-ft (6706 mm)	23-ft (7010 mm)

*** See Ordering and Specifications Catalog for details.**

NOTE: Maximum conveyor loads based on:

- **Non-accumulating product**
- **Product moving towards gearmotor**
- **Conveyor being mounted horizontal**

Installation

NOTE: Conveyor MUST be mounted straight, flat and level within confines of conveyor. Use a level (M of Figure 3) for setup.

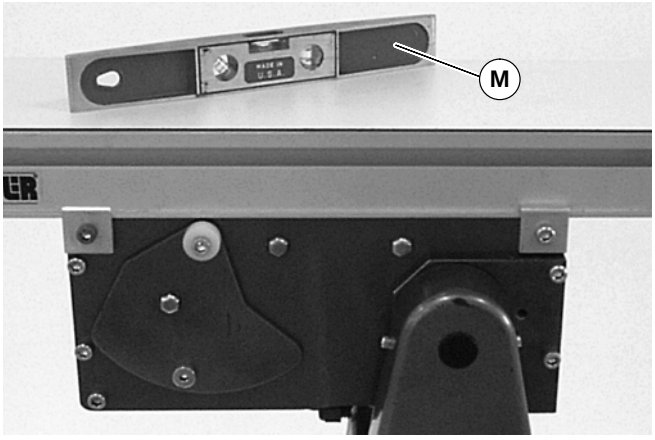

Figure 3

Installation Component List

O Conveyor fram (two sections if longer than 12ft)
P Conveyor brackets (4x)
Q Return rollers (for longer conveyors)

Required Tools

- Hex key wrenches:
  4 mm, 5 mm
- Level
- Torque wrench

Recommended Installation Sequence

- Install stands (see accessory instructions)
- Assemble conveyor (if required)
- Attach mounting brackets to conveyor
- Attach conveyor to stands
- Install return rollers on conveyor (optional)
- Mount gearmotor mounting package (see accessory instructions)
- Attach guides/accessories (see "Service Parts" section, pages 33 to 39)

Conveyors Up to 13 ft (3962 mm)

No assembly is required. Install mounting brackets and return rollers. Refer to "Mounting Brackets", page 6 and "Return Rollers", page 7.

Conveyors Longer Than 13 ft (3962 mm)

1. Locate conveyor sections (O Figure 4)

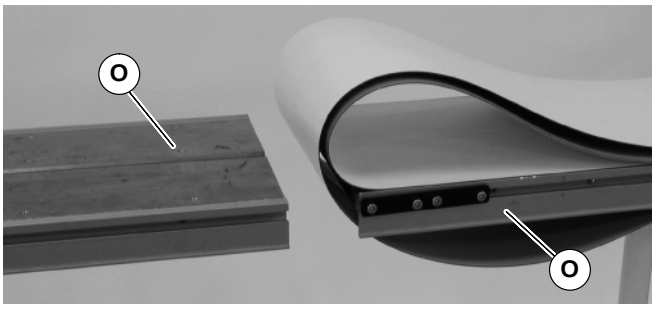

Figure 4

2. On tension end of the conveyor, identified with a label (R of Figure 5), push in head plate assembly (S): On both sides of conveyor, loosen and move cam tracking assemblies (T) (if equipped) away from head plates, then loosen fastening screws (U) and push head plate assembly inward.

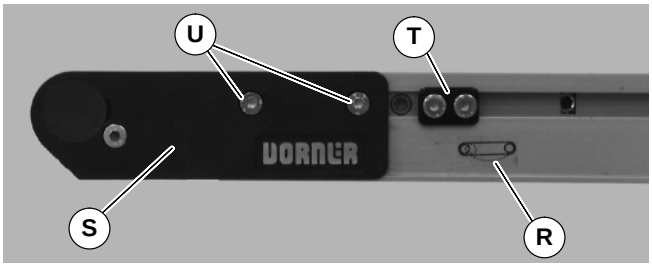

Figure 5

3. Roll out conveyor belt and place conveyor frame sections (O of Figure 6) into belt loop.

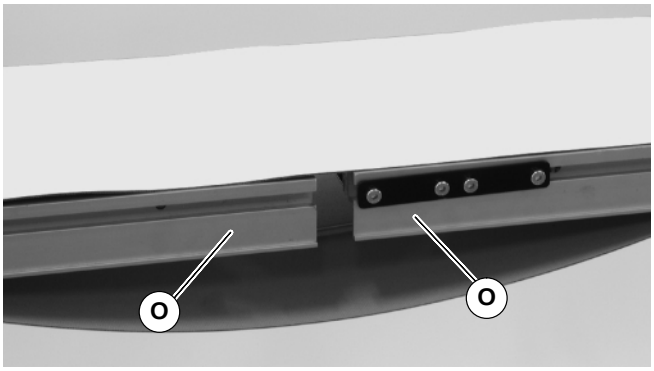

Figure 6

4. Join conveyor sections and install connector brackets (V of Figure 7) or connector/mount brackets (VA) and screws (W) on both sides as indicated. Tighten screws to 60 in-lb (7 Nm).

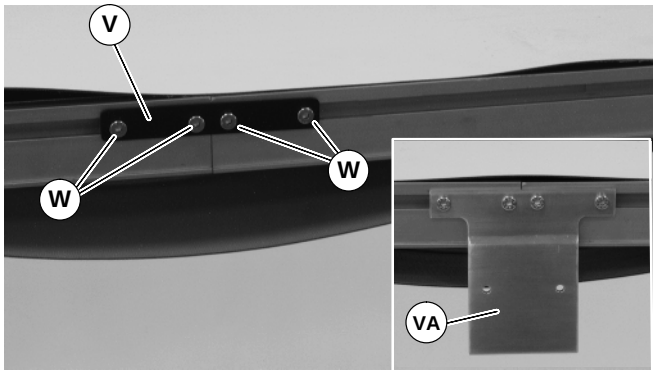

Figure 7

5. With a 5 mm hex-key wrench, rotate pinion gear (X of Figure 8) to tension the conveyor belt. Tighten fastening screws (U) on both sides of conveyor to 60 in-lb (7 Nm). For proper tensioning, refer to "Conveyor Tension End Adjustment", page 14.

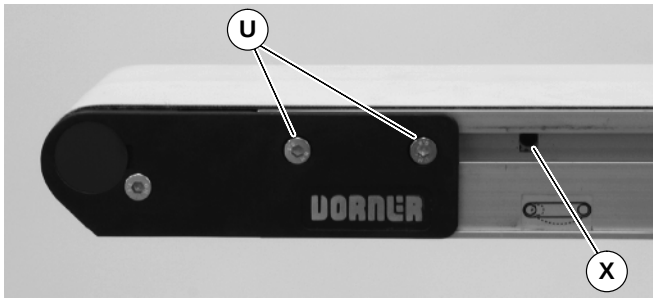

Figure 8

6. Install mounting brackets and return rollers. Refer to "Mounting Brackets", page 6 and "Return Rollers", page 7.
7. If equipped with cam tracking assemblies (T of Figure 5), adjust belt tracking. Refer to "Conveyor Belt Tracking", page 16.

Mounting Brackets

1. Locate brackets. Exploded views shown in Figures 9.

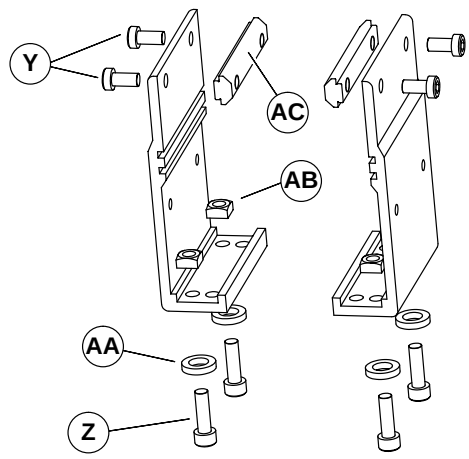

Mounting Brackets for Flat Belt Conveyor

Figure 9

2. Remove screws (Y & Z of Figures 9), washers (AA), nuts (AB) and T-bars (AC) from brackets.

3. Insert T-bars (AC of Figures 9) into conveyor side slots (AD of Figure 10). Fasten brackets (P of Figure 10) to conveyor with mounting screws (Y).

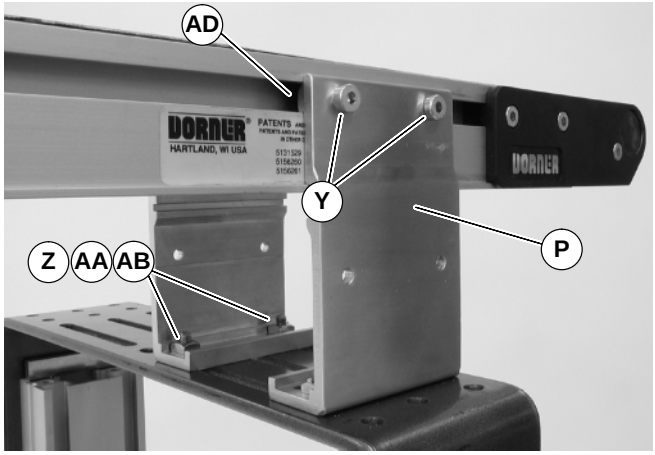

Figure 10

4. Fasten brackets to support stand with mounting screws (Z of Figure 10), washers (AA) and nuts (AB).

5. Tighten screws (Y & Z of Figure 10) to 60 in-lb (7 Nm).

Return Rollers

2–6¨ (51–152 mm) Wide Flat Belt Conveyors

1. Locate return rollers. Exploded views shown in Figures 11.

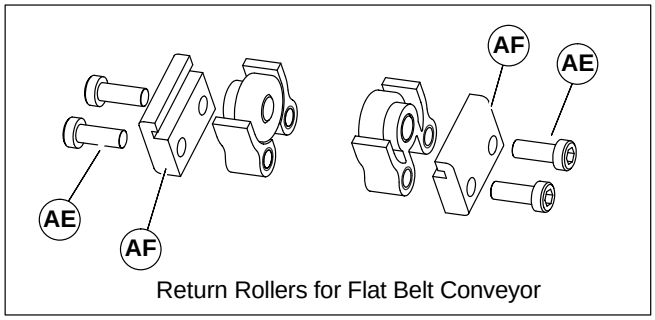

Figure 11

2. Remove screws (AE of Figures 11) and clips (AF) from roller assembly.
3. Install roller assemblies (Q of Figure 12) as shown. Tighten screws (AE) to 60 in-lb (7 Nm).

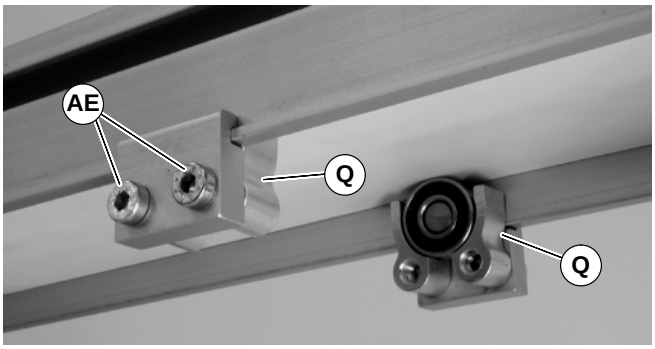

Figure 12

8–24¨ (203–610 mm) Wide Flat Belt Conveyors

1. Locate return rollers. Exploded view shown in Figure 13.

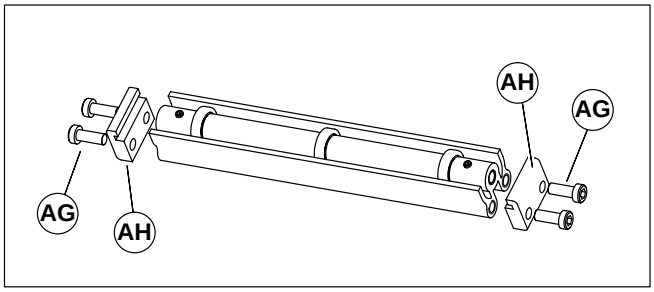

Figure 13

2. Remove screws (AG of Figure 13) and clips (AH) from roller assembly.
3. Install roller assembly as shown (Q of Figure 14). Tighten screws (AG) to 60 in-lb (7 Nm).

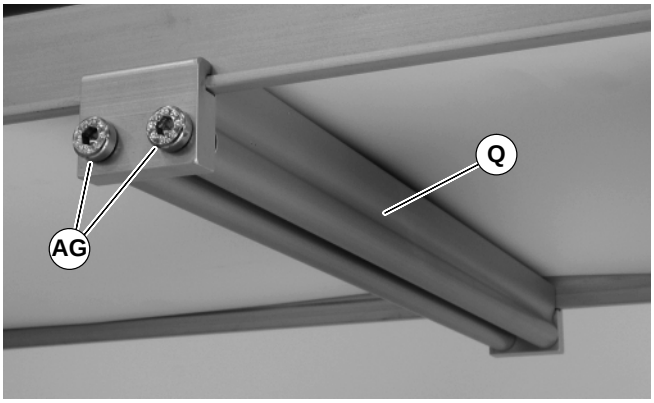

Figure 14

Preventive Maintenance and Adjustment

Required Tools

Standard Tools

- Hex key wrenches:

– 2 mm	– 2.5 mm	– 3 mm
– 4 mm	– 5 mm	– 6 mm

- Small flat blade screwdriver
- Adjustable wrench
- Arbor press

Special Tools

- 450282, Sealed Bearing Installation Tool

Checklist

- Keep service parts on hand. See “Service Parts” for recommendations.
- Keep supply of belt cleaner (part number 625619)
- Clean entire conveyor and knurled pulley while disassembled
- Replace worn or damaged parts

Lubrication

WARNING

Exposed moving parts can cause severe injury.

LOCK OUT POWER before removing guards or performing maintenance.

Conveyor Pulley Bearings

No lubrication is required. Replace pulley if worn.

Drive Module Idler Pulley Bearings

No lubrication is required. Replace pulley if worn.

Drive Module Drive Pulley Bearings

No lubrication is required. Replace bearings if worn.

Return Rollers

No lubrication is required. Replace bearings if worn.

Maintaining Conveyor Belt

Troubleshooting

Inspect conveyor belt for:

- Surface cuts or wear
- Stalling or slipping

Surface cuts and wear indicate:

- Sharp or heavy parts impacting belt
- Jammed parts
- Improperly installed bottom wiper
- Accumulated dirt in wiper
- Foreign material inside the conveyor
- Improperly positioned accessories
- Bolt-on guiding is pinching belt

Stalling or slipping indicates:

- Excessive load on belt
- Conveyor belt or drive timing belt are not properly tensioned
- Worn knurl or impacted dirt on drive pulley
- Intermittent jamming or drive train problems

NOTE: Visit www.dorner.com for complete list of troubleshooting solutions.

Cleaning

IMPORTANT: Do not use belt cleaners that contain alcohol, acetone, Methyl Ethyl Ketone (MEK) or other harsh chemicals.

Use Dorner Belt Cleaner (part number 625619). Mild soap and water may also be used. Do not soak the belt.

For /05 woven polyester and /06 black anti-static belts, use a bristled brush to improve cleaning.

Conveyor Belt Replacement

WARNING

Exposed moving parts can cause severe injury.

LOCK OUT POWER before removing guards or performing maintenance.

Conveyor Belt Replacement Sequence

NOTE: See Table of Contents for beginning page numbers of following procedures.

- Remove old conveyor belt:

  Conveyor without Stands or Gearmotor Mounting Package

  Conveyor with Stands and Gearmotor Mounting Package
- Drive Module Removal
- Conveyor Belt Removal from Drive Module
- Install New Conveyor Belt
- Tension Conveyor Belt

Belt Removal for Conveyor Without Stands or Gearmotor Mounting Package

1. If equipped, remove bottom wipers (AI of Figure 15): Remove fastening screws (AJ) then remove wiper (AI).

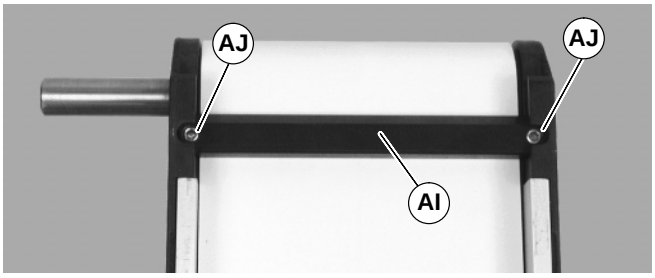

Figure 15

2. If equipped, remove return rollers and guiding and accessories from one side of conveyor.
3. Loosen corner screws (AK of Figure 16), on each side of the drive module (AL).

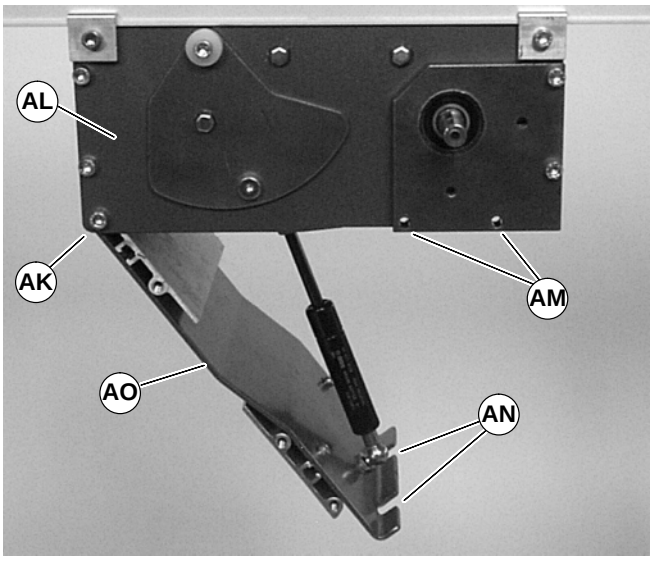

Figure 16

4. Remove tension door screws (AM) on each side of the drive module.
5. Using finger grip holes (AN), open the tension door (AO) to release conveyor belt tension.
6. On tension end of the conveyor, identified with a label (R of Figure 17), push in head plate assembly (S): On both sides of conveyor, loosen and move cam tracking assemblies (T) (if equipped) away from head plates, then loosen fastening screws (U) and push head plate assembly inward.

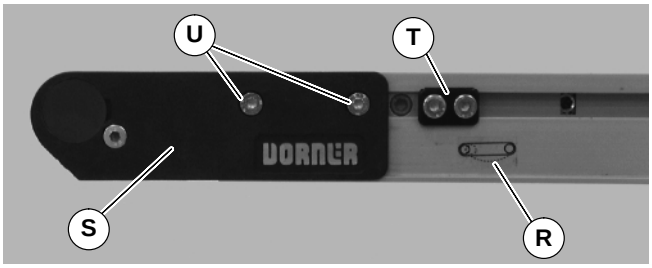

Figure 17

7. Remove conveyor belt from conveyor ends. See **NOTE**.

NOTE: On conveyors 4-ft (1219 mm) and shorter by 8¨ (203 mm) and wider, it is be necessary to remove the drive module at the same time the conveyor belt is removed. See "Drive Module Removal", page 12.

8. Proceed to "Drive Module Removal", page 12 and "Belt Removal from Drive Module", page 12.

Belt Removal for Conveyor With Stands and Gearmotor Mounting Package

1. If equipped, remove bottom wipers (AI of Figure 18): Remove fastening screws (AJ) then remove wiper (AI).

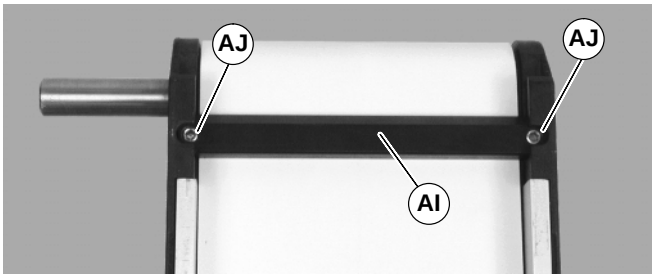

Figure 18

2. If equipped, remove return rollers and guiding and accessories from one side of conveyor.
3. Remove Gearmotor Mounting Package. See "Gearmotor Mounting Package Removal", page 11.
4. Loosen corner screws (AK of Figure 19), on each side of the drive module (AL).

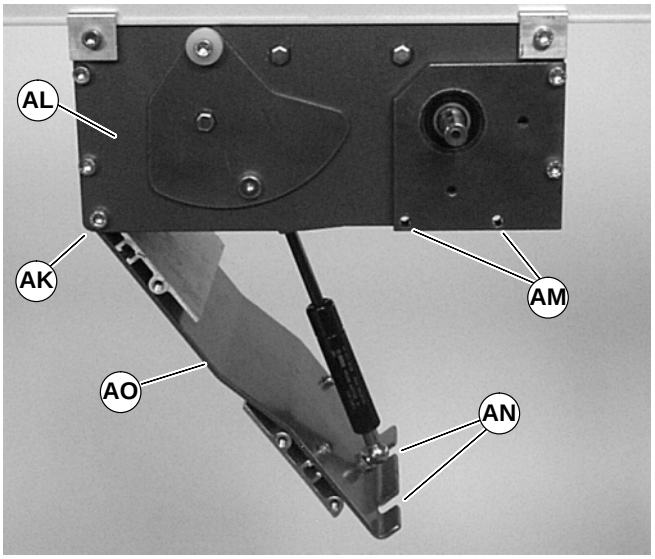

Figure 19

5. Remove tension door screws (AM) on each side of the drive module.

NOTE: With vertically mounted gearmotors, tension door screws (AM) are removed from one side when the gearmotor mounting package is removed.

6. Using finger grip holes (AN), open the tension door (AO) to release conveyor belt tension.
7. On tension end of the conveyor, identified with a label (R of Figure 20), push in head plate assembly (S): On both sides of conveyor, loosen and move cam tracking assemblies (T) (if equipped) away from head plates, then loosen fastening screws (U) and push head plate assembly inward.

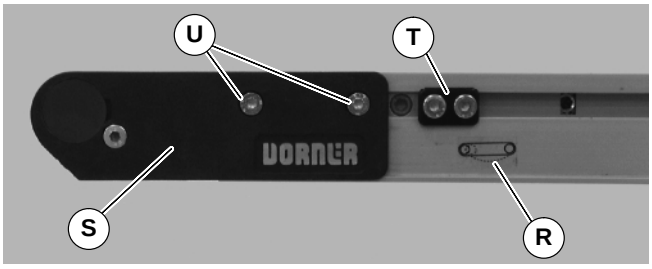

Figure 20

8. Place temporary support stands (AP of Figure 21) at both ends of the conveyor.

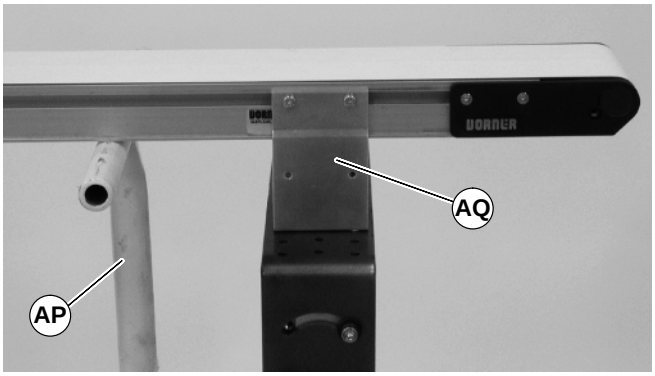

Figure 21

9. Remove mounting brackets (AQ of Figure 21) from one side of conveyor. (Reverse steps 3 & 4 of "Mounting Brackets" section, page 6.)
10. Remove conveyor belt from conveyor ends. See **NOTE**.

NOTE: On conveyors 4-ft (1219 mm) and shorter by 8¨ (203 mm) and wider, it is be necessary to remove the drive module at the same time the conveyor belt is removed. See "Drive Module Removal", page 12.

11. Proceed to "Drive Module Removal", page 12 and "Belt Removal from Drive Module", page 12.

Gearmotor Mounting Package Removal

1. Remove cover screws (AR of Figure 22) and remove cover (AS).

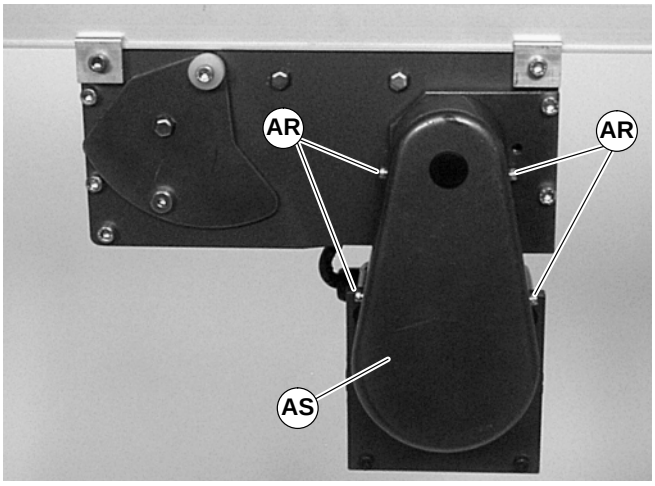

Figure 22

NOTE: Figures 22 & 23 show vertically mounted gearmotor. Horizontally mounted gearmotor is similar.

2. Loosen belt tensioner (AT of Figure 23) then remove timing belt (AU).

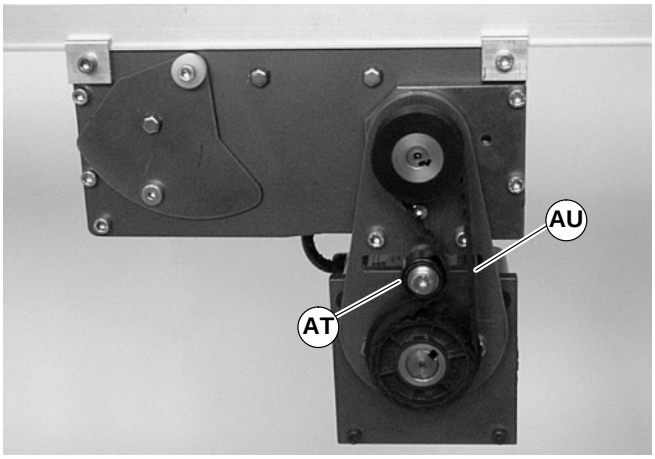

Figure 23

NOTE: If the timing belt does not slide over the pulley flange, loosen the driven pulley set screws (AV of Figure 24) and remove the pulley (AW) with the belt (AY).

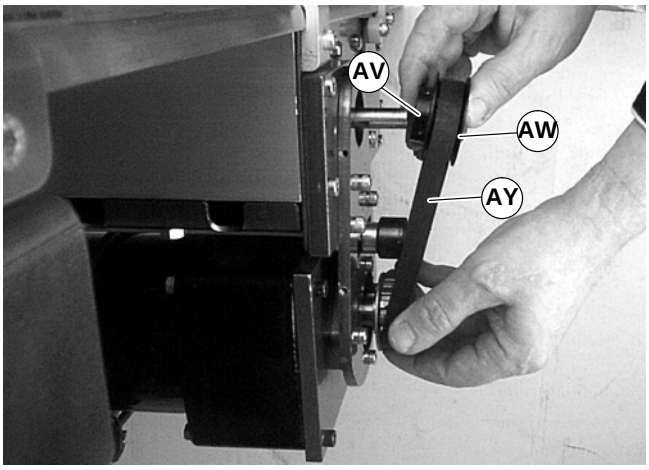

Figure 24

3. Remove three mounting screws (AZ of Figure 25) and remove gearmotor.

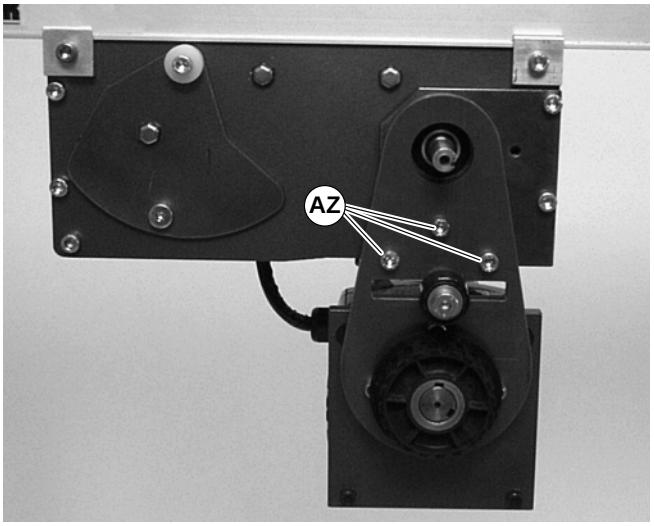

Figure 25

Drive Module Removal

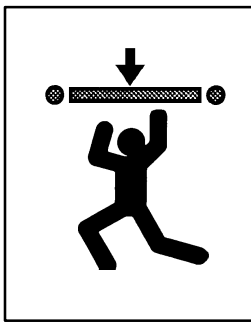

WARNING

Removing drive module without support under the module may lead to personel injury.

PROVIDE SUPPORT UNDERNEATH THE DRIVE MODULE BEFORE REMOVING THE MODULE.

NOTE: If desired, mark position of drive module on conveyor before removal.

1. Place temporary support (BA of Figure 26) underneath the drive module.

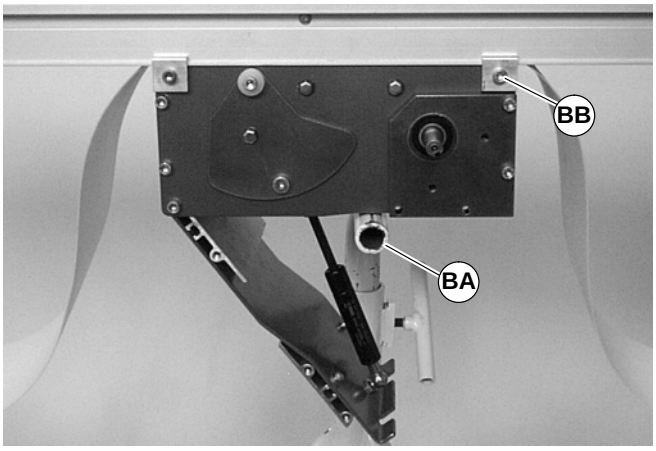

Figure 26

2. Loosen clamp screws (BB) on each corner of the module. Remove the module.

Belt Removal from Drive Module

1. Remove drive plate screws (BC of Figure 27). Remove the tension drive plate (BD).

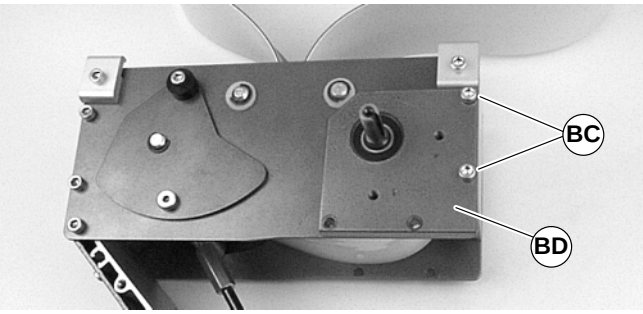

Figure 27

2. Remove drive pulley (BE of Figure 28).

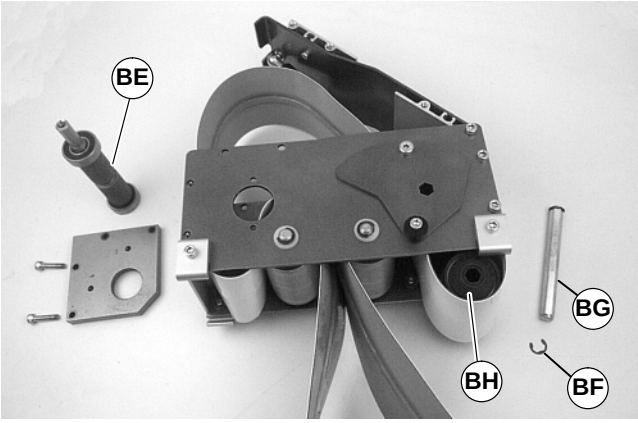

Figure 28

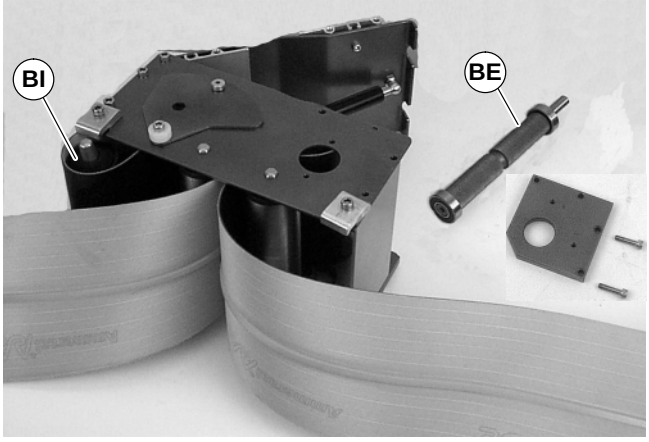

Figure 29

3. Remove grooved idler pulley:
   - For 2” (44 mm), 3” (70 mm) or 4” (95 mm) wide conveyor, detach E-ring clip (BF of Figure 28). Remove pulley shaft (BG) and remove pulley (BH).
   - For 5” (127 mm) or wider conveyor, depress both sides of spring-loaded shaft and remove pulley (BI of Figure 29).
4. Remove the conveyor belt.

Conveyor Belt Installation

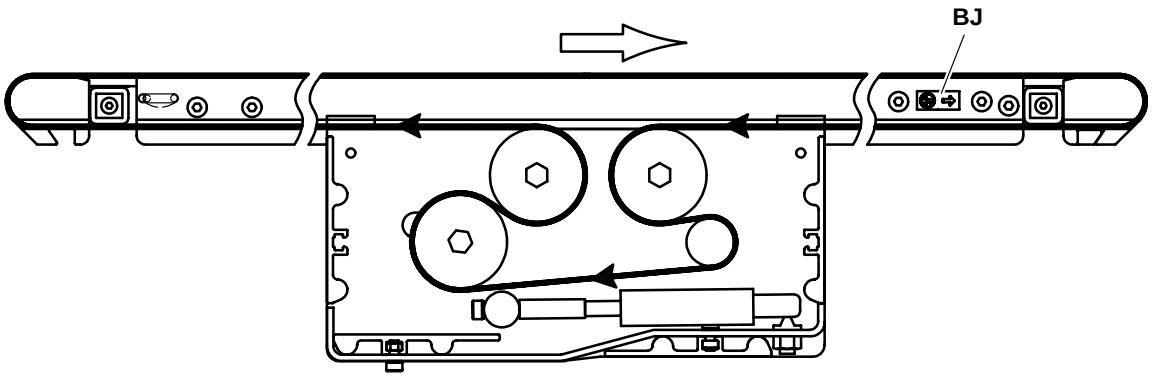

Conveyor Belt Routing

Figure 30

IMPORTANT: On a center drive conveyors, belt travel direction is identified by an arrow decal on the side of the conveyor (BJ of Figures 31 & 30).

Figure 31

NOTE: It is necessary to replace the drive module at the same time the conveyor belt is replaced on conveyors 4-foot (1219 mm) and shorter by 8¨ (203 mm) and wider.

1. Orient the conveyor belt so that the splice leading fingers (BK of Figure 32) point in the direction of belt travel, indicated by the label (BJ of Figure 31).

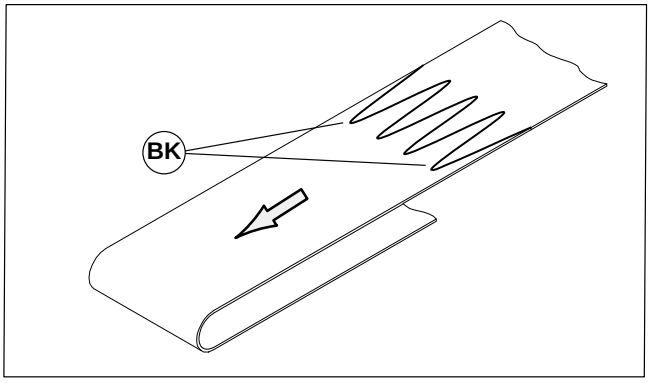

Figure 32

2. Place loop of belt (BL of Figure 33) into the drive module between top idler pulleys (BM).

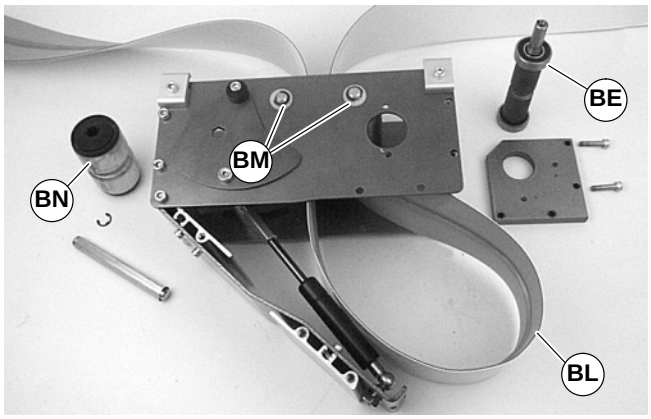

Figure 33

3. Place grooved idler pulley (BN of Figure 33) into the belt loop and install it in the drive module. Refer to "Belt Removal from Drive Module" on page 12 and reverse step 3.
4. Place drive pulley (BE of Figure 33) into the belt loop and install it in the drive module. Refer to "Belt Removal from Drive Module" on page 12 and reverse steps 1 and 2. Tighten screws (BC of Figure 27) to 80 in-lb (9 Nm).
5. Install the drive module onto the conveyor and attach clamps (BB of Figure 26) in each corner. Tighten screws to 80 in-lb (9 Nm).
6. Route and install the belt over both ends of the conveyor.
7. On conveyors with stands, re-install conveyor mounting brackets. Refer to "Mounting Brackets", page 6, steps 3 through 5.
8. Adjust the conveyor tensioning end. See "Conveyor Tensioning End Adjustment", page 14.

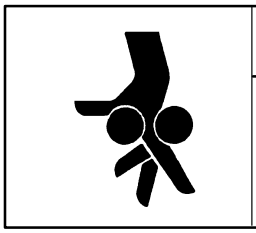

WARNING

Tension door closes quickly, may cause injury.

KEEP FINGERS CLEAR OF TENSION DOOR.

9. Carefully close the drive module tension door (BO of Figure 34). See **WARNING**.

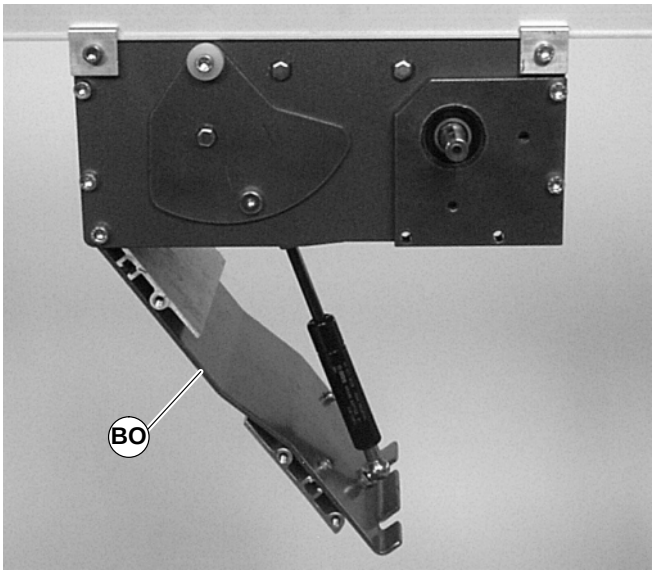

Figure 34

10. Tighten corner screws (BO of Figure 35) on each side of the drive module to 80 in-lb (9 Nm).

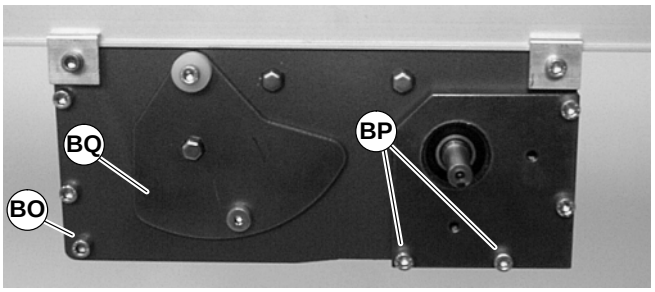

Figure 35

11. If equipped, re-install the gearmotor mounting package. Reverse steps of "Gearmotor Mounting Package Removal" procedure on page 11.

12. Re-install tension door screws (BP of Figure 35) on each side of the module. Tighten screws to 80 in-lb (9 Nm).

NOTE: With vertically mounted gearmotors, tension door screws (BP) are installed on one side when the gearmotor mounting package is installed.

13. If equipped, re-install bottom wipers (AI of Figure 36): Install wiper (AI) then install screws (AJ).

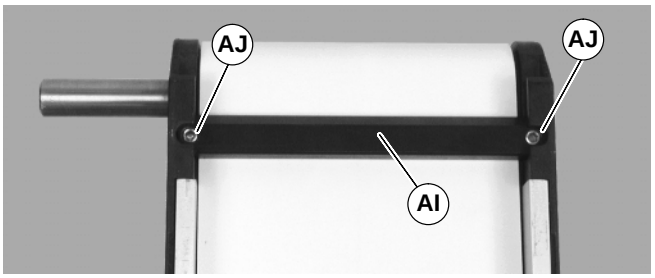

Figure 36

14. If equipped, replace guiding.

Conveyor Tension End Adjustment

WARNING

Exposed moving parts can cause severe injury.

LOCK OUT POWER before removing guards or performing maintenance.

Conveyors with 1.25¨ (32 mm) Diameter Pulleys

1. On tension end of the conveyor, identified with a label (R of Figure 37), adjust head plate assembly (S): On both sides of conveyor, loosen fastening screws (U) and rotate pinion gear (X) to adjust head plate assembly.

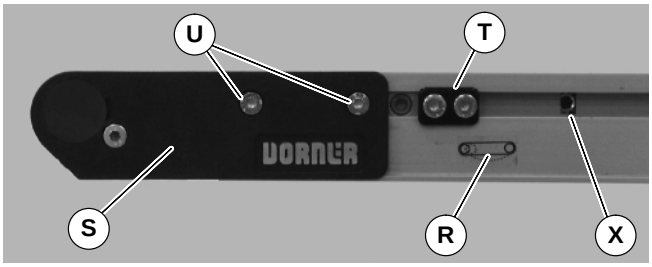

Figure 37

2. Adjust head plate assembly so end of conveyor frame aligns with first tensioning mark (BR of Figure 38). Tighten fastening screws (U of Figure 37) on both sides of conveyor to 60 in-lb (7 Nm).

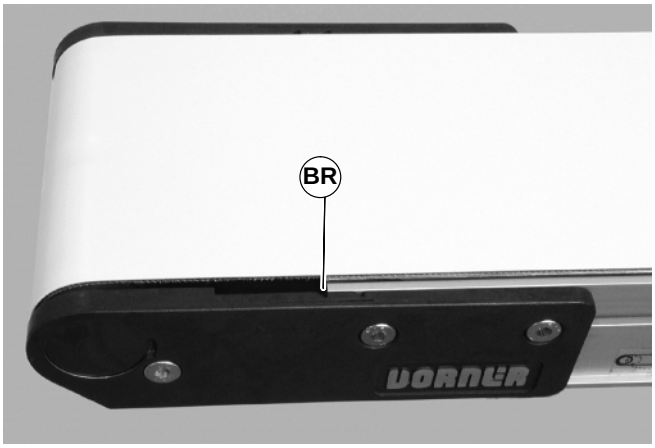

Figure 38

3. If equipped with cam tracking assemblies (T of Figure 37), reposition against head plates and adjust belt tracking. Refer to “Conveyor Belt Tracking”, page 16.

Conveyors with Nose Bar Idlers

1. On tension end of the conveyor, identified with a label (R of Figure 39), adjust head plate assembly (S): On both sides of conveyor, loosen fastening screws (U) and rotate pinion gear (X) to adjust head plate assembly.

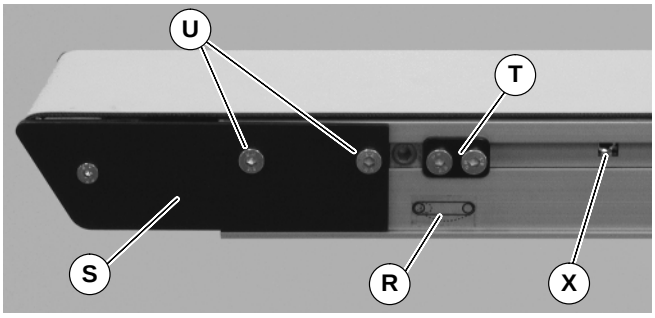

Figure 39

2. Adjust head plate assembly so the edge of the axle support plate (BS of Figure 40) is separated from the end of the conveyor (BT) by 1.125¨ (29 mm). Tighten fastening screws (U of Figure 39) on both sides of conveyor to 60 in-lb (7 Nm).

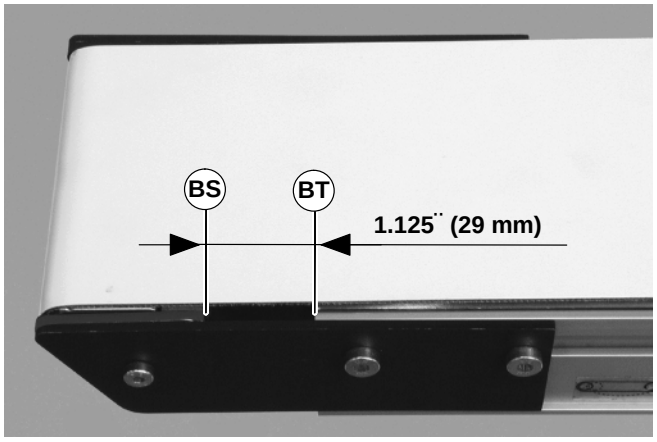

Figure 40

3. If equipped with cam tracking assemblies (T of Figure 39) position against head plates and adjust belt tracking. Refer to “Conveyor Belt Tracking”, page 16.

Conveyor Belt Tensioning

The conveyor is equipped with an automatic tensioning cylinder. No tensioning adjustment is required.

For a new belt, the tension plate (BQ of Figure 41) will be in position indicated below left. When the tension plate extends to position indicated below right, the conveyor belt must be replaced.

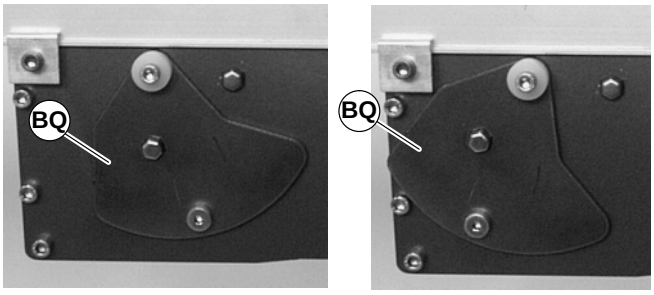

New Belt **Change Belt**

Figure 41

Conveyor Belt Tracking

V-Guided Belts

V-guided belts do not require tracking adjustment.

Non V-Guided Belts

Non V-guided belt conveyors are equipped with belt tracking cam assemblies (T of Figure 42) for belt tracking adjustment.

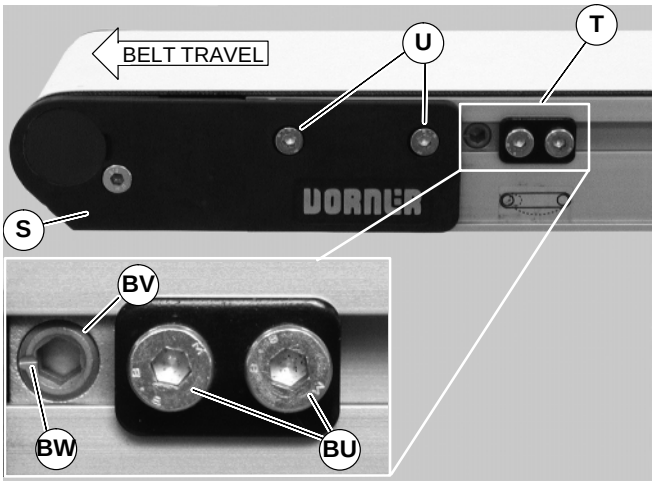

Figure 42

When adjusting belt tracking, always adjust the discharge end of the conveyor first. To adjust belt tracking:

1. Ensure head plate fastening screws (U of Figure 42) on both sides of conveyor are tightened.
2. On both sides of conveyor, loosen two (2) cam fastening screws (BU). Adjust cams (BV) until indicator slots (BW) are horizontal and facing end of conveyor. Then slide cam assemblies against head plates (S) and re-tighten cam fastening screws (BU) to 60 in-lb (7 Nm).
3. On the side toward which the belt is tracking, loosen head plate fastening screws (U).
4. With the conveyor running, use a 5 mm hex-key wrench to rotate the tracking cam (BV) in small increments until the belt tracks in the center of the conveyor. Then while holding the cam in position, re-tighten the head plate fastening screws (U) with a 4 mm hex-key wrench to 60 in-lb (7 Nm).

Pulley Removal

WARNING

Exposed moving parts can cause severe injury.

LOCK OUT POWER before removing guards or performing maintenance.

Remove the conveyor belt to access the pulley(s). Perform the indicated steps of one of the following procedures:

- “Belt Removal for Conveyor Without Gearmotor Mounting Package or Stands”, page 9, steps 1 through 7.
- “Belt Removal for Conveyor With Stands and Gearmotor Mounting Package”, page 10, steps 1 through 10.

Remove desired pulley following procedures:

- Conveyor End Pulley Removal
- Module Drive Pulley Removal
- Module Idler Pulley Removal

Conveyor End Pulley Removal

1. On both sides of conveyor, loosen two (2) fastening screws (U of Figure 43). Then slide idler pulley assembly out from the conveyor frame.

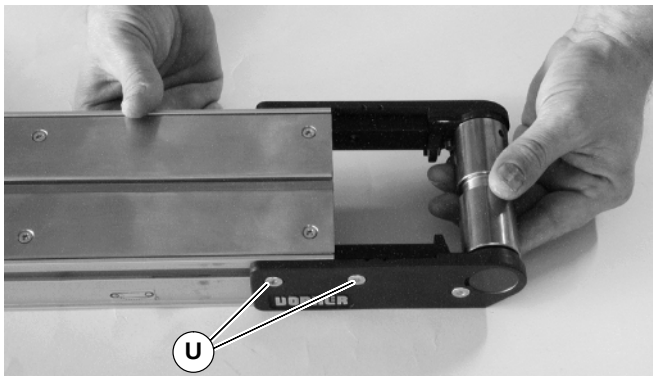

Figure 43

2. Remove bearing covers (BX of Figure 44).

Figure 44

3. With 4mm hex-key wrench, loosen pulley taper screw (BY of Figure 45). Steady pulley with second hex-key wrench (BZ) inserted into pulley hole. Repeat procedure for opposite side of pulley.

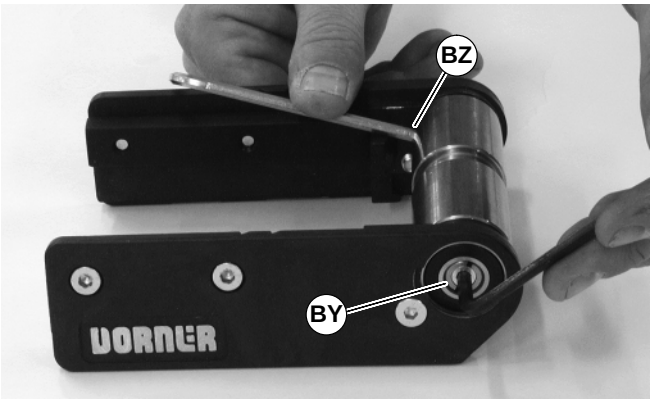

Figure 45

4. Pull head plates with bearings off from the pulley.

Drive Module Drive Pulley Removal

1. Remove the gearmotor drive package. Refer to "Gearmotor Mounting Package Removal", page 11.
2. Remove the drive module. Refer to "Drive Module Removal", page 12.
3. Remove the drive pulley. Refer to "Belt Removal from Drive Module", page 12, steps 1 and 2.

Drive Module Idler Pulley Removal

1. Remove the gearmotor drive package. Refer to "Gearmotor Mounting Package Removal", page 11.
2. Remove the drive module. Refer to "Drive Module Removal", page 12.
3. Remove the grooved idler pulley. Refer to "Belt Removal from Drive Module", page 12, step 3.
4. Remove smooth idler pulleys:

- For 2" (44 mm), 3" (70 mm) or 4" (95 mm) wide conveyor, detach E-ring clips and remove washers (CA of Figure 46). Remove pulley shafts (CB) and pulleys (CC).

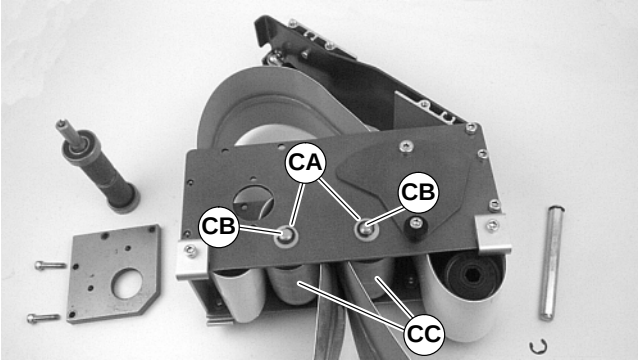

Figure 46

- For 5" (127 mm) or wider conveyor, depress both sides of each spring-loaded shaft (CD of Figure 47). Remove pulleys (CE).

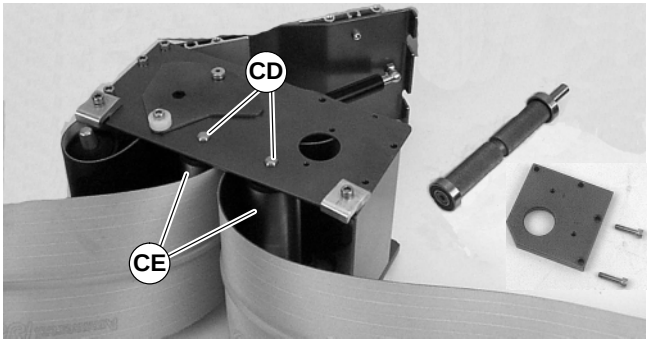

Figure 47

Conveyor Pulley Bearing Replacement

Removal

1. Turn bearing (CF of Figure 48) to align with slots (CH) in head plate. Then remove bearing.

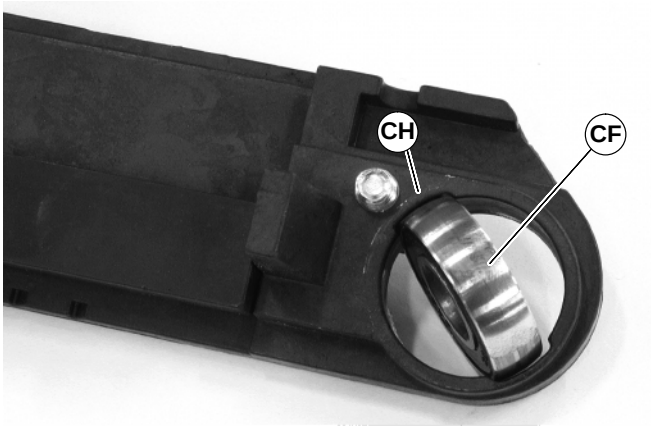

Figure 48

Replacement

1. Inspect head plate bearing surface. If worn or damaged, replace head plate. See “Service Parts”, page 23.
2. Insert bearing (CF of Figure 49) into head plate slot and twist bearing to fit into bearing enclosure.

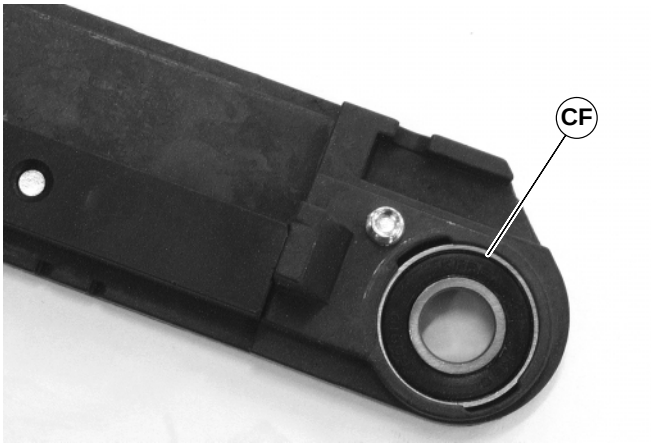

Figure 49

Bearing Replacement for Drive Pulley

IMPORTANT: Once removed, do not re-use bearings.

Bearing Removal

1. Locate drive pulley (CI of Figure 50) in a standard bearing separator (CJ) as shown.

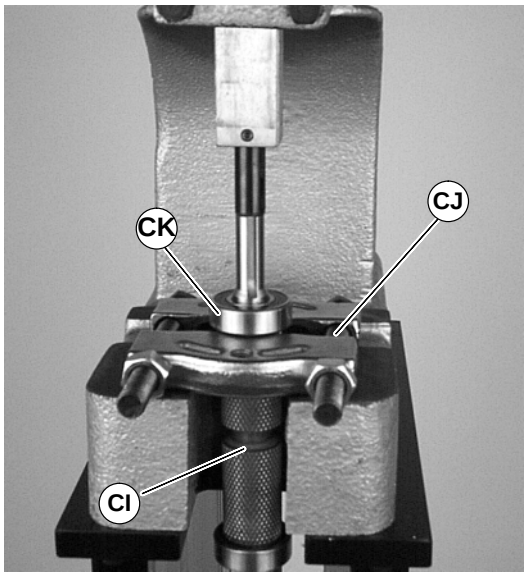

Figure 50

2. Using arbor press or similar device, press-off bearing (CK).

Bearing Installation

1. Inspect seating surface(s) for damage. Replace if damaged.
2. Place two (2) 5/8 flat washers, or equivalent (CL of Figure 51), over the pulley shaft (CM) and against bearing (CK) (part # 802-124).

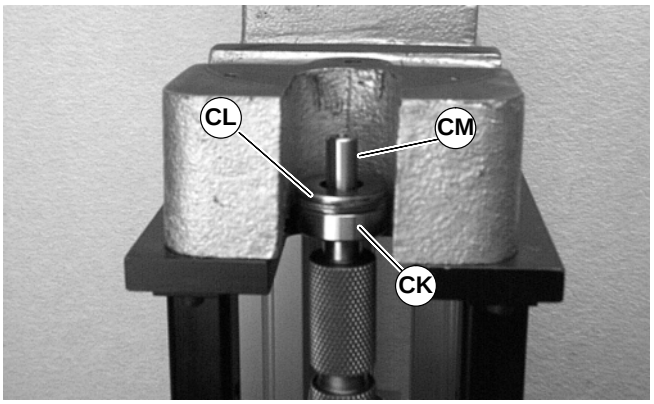

Figure 51

3. Place the shaft of tool (part # 450282) (CN of Figure 52) over pulley shaft (CM).

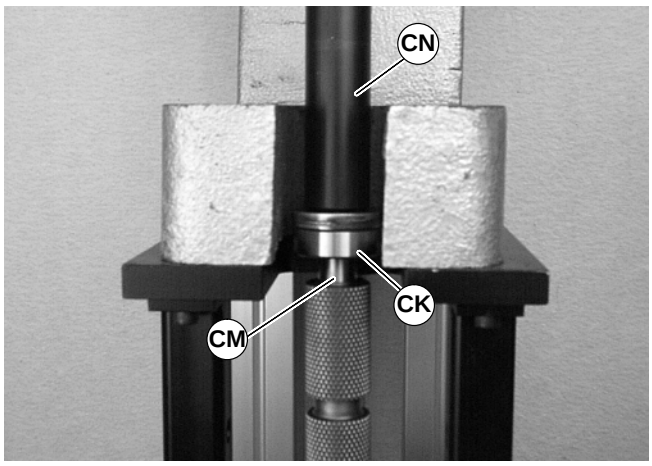

Figure 52

4. Using arbor press or similar device, press bearing onto pulley shaft as shown.

Bearing Replacement for Idler Pulleys

NOTE: Bearings can not be removed from idler pulleys. Replace entire pulley, when worn. See Service Parts section on page 23.

Pulley Replacement

Conveyor End Pulley

1. With bearing installed in head plate, press bearing on to shaft (CH of Figure 53) of pulley. Repeat for both sides of pulley.

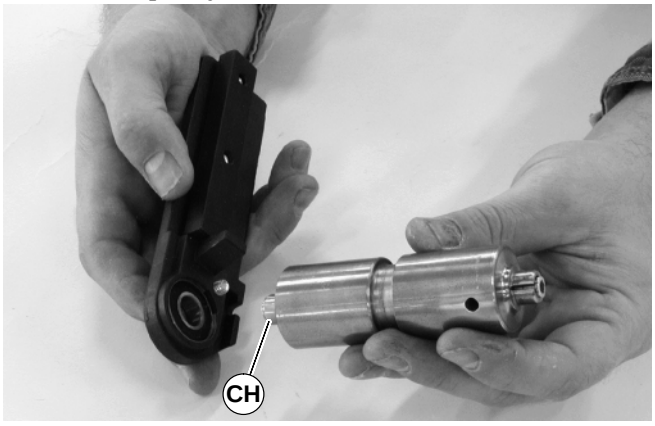

Figure 53

NOTE: DO NOT tighten shaft bearing taper screws at this time.

2. Install pulley assembly on conveyor. On both sides of conveyor, hand tighten fastening screws (U of Figure 54).

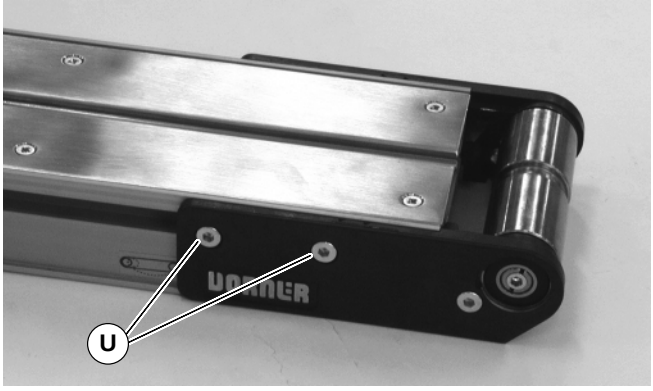

Figure 54

3. On both sides of pulley, use a 4mm hex-key wrench to tighten pulley taper screw (BY of Figure 55) to 75 in-lb (8.5 Nm). Steady pulley with second hex-key wrench (BZ) inserted into pulley hole.

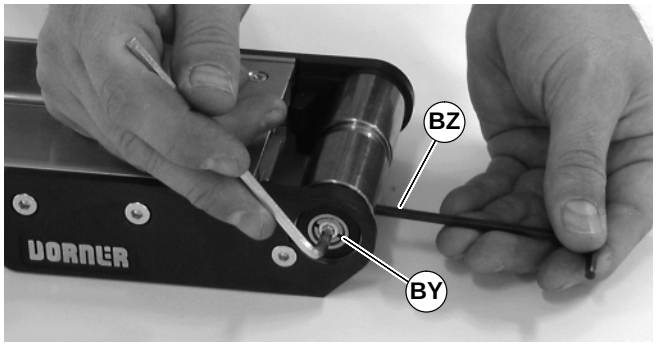

Figure 55

4. Install bearing covers (BX of Figure 56).

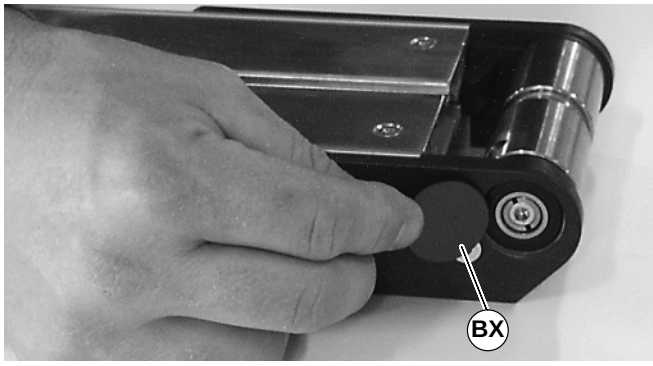

Figure 56

5. Re-install belt on end of conveyor, then tension the belt. See “Conveyor Tension End Adjustment”, page 14.

6. Re-position the cam assemblies against the head plates and adjust belt tracking. See “Conveyor Belt Tracking”, page 16.

Drive Module Drive Pulley

1. Reverse “Drive Module Drive Pulley Removal” procedure on page 17.
2. Re-install belt on end of conveyor, then tension the belt. See “Conveyor Tension End Adjustment”, page 14.
3. Re-position the cam assemblies against the head plates and adjust belt tracking. See “Conveyor Belt Tracking”, page 16.

Drive Module Idler Pulley

1. Reverse “Drive Module Idler Pulley Removal” procedure on page 17.
2. Re-install belt on end of conveyor, then tension the belt. See “Conveyor Tension End Adjustment”, page 14.
3. Re-position the cam assemblies against the head plates and adjust belt tracking. See “Conveyor Belt Tracking”, page 16.

Nose Bar Bearing Replacement

WARNING

Exposed moving parts can cause severe injury.

LOCK OUT POWER before removing guards or performing maintenance.

1. Remove the conveyor belt to access the bearings. Perform the indicated steps of one of the following procedures:
   - “Belt Removal for Conveyor Without Gearmotor Mounting Package or Stands”, page 9, steps 1 through 7.
   - “Belt Removal for Conveyor With Stands and Gearmotor Mounting Package”, page 10, steps 1 through 10.
2. On one side of conveyor, use a 3 mm and 4 mm hex-key wrench to remove head plate fastening screws (CP & U of Figure 57) and remove head plate (S).

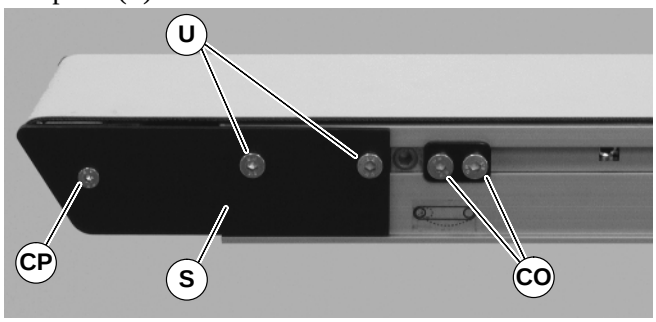

Figure 57

3. Slide bearing rods (CQ of Figure 58) out side of conveyor and replace bearings (CR) as necessary.

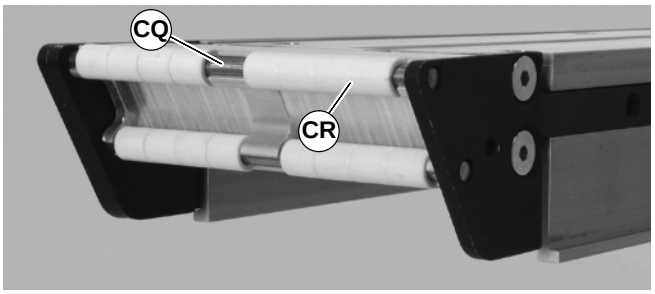

Figure 58

4. After replacing bearings, re-install head plate (S of Figure 57). Use a 3 mm hex-key wrench to tighten one (1) fastening screw (CP) to 30 in-lb (3.4 Nm). Leave two (2) fastening screws (U) loose for belt tensioning.
5. Re-install belt on end of conveyor, then tension the belt. See “Conveyor Tension End Adjustment”, page 14.
6. Re-position the cam assemblies against the head plates and adjust belt tracking. See “Conveyor Belt Tracking”, page 16.

Notes

Service Parts

NOTE: For replacement parts other than those shown on this page, contact an authorized Dorner Service Center or the factory.

2” (51mm) Wide Conveyor Assembly

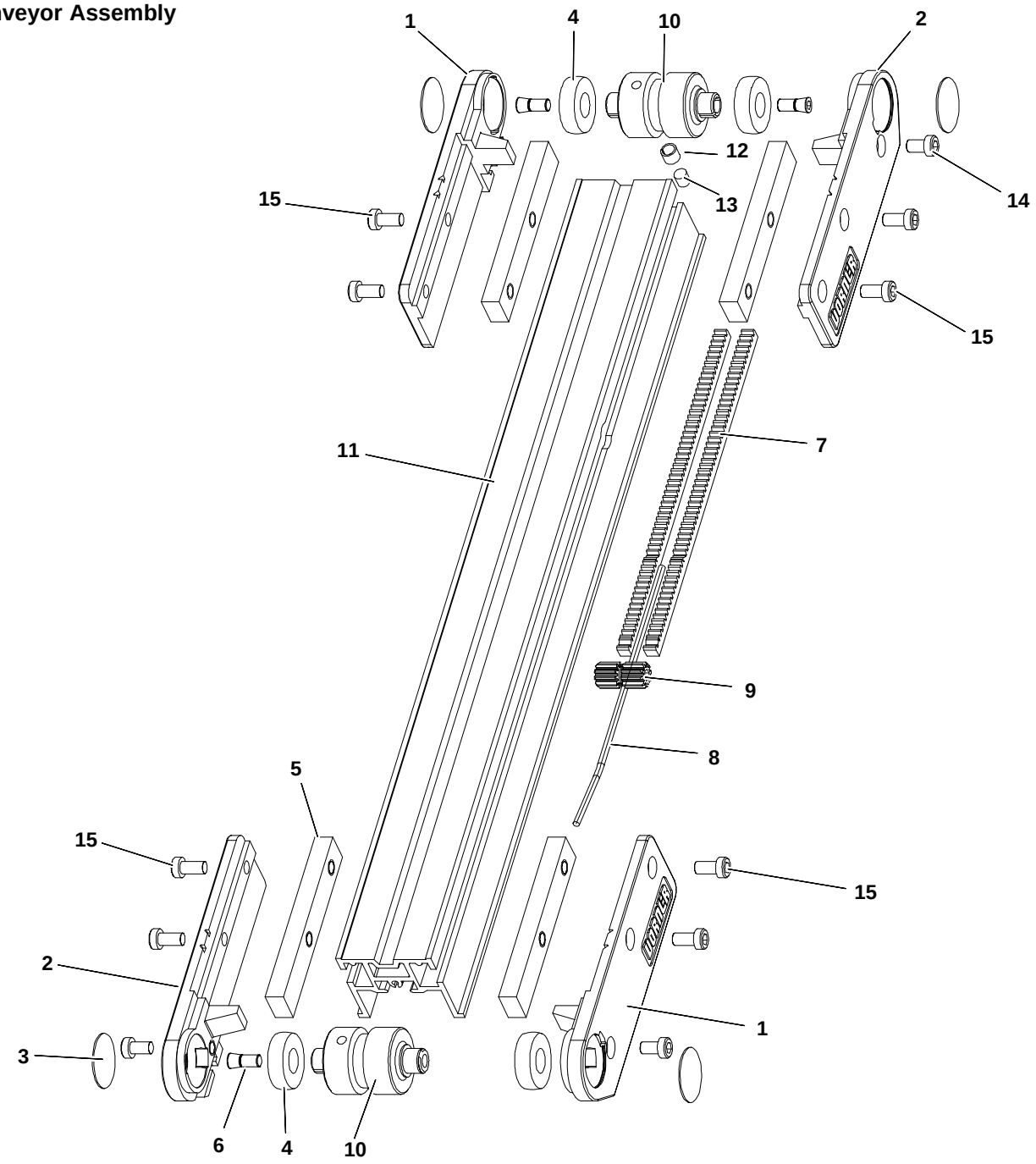

Item	Part Number	Description
1	240325	Head Plate LH
2	240326	Head Plate RH
3	240327	Bearing Cover Disk
4	240328	Bearing
5	240329	Tension Slide Bar
6	240330	Taper Screw
7	240420	Rack Gear 14.5 PA x 24 P
8	240422	Pinion Pin
9	240423	Pinion 2” (51mm)
10	240702	Idler Spindle 2” (51mm)
11	See Chart Below	2” (51mm) Frame
12	450226SSP	Sleeve, .25” Magnet Stainless Steel
13	808–020	Magnet .25” Dia x .25” Long
14	920691M	Socket Head Screw M6 x 10mm
15	920692M	Socket Head Screw M6 x 12mm

Item 12: 2” (51mm) Conveyor Frame		
Length	Part Number	
2’ (610mm)	240402–01908	
3’ (914mm)	240402–03108	
4’ (1219mm)	240402–04308	
5’ (1524mm)	240402–05508	
6’ (1829mm)	240402–06708	
7’ (2134mm)	240402–07908	
8’ (2438mm)	240402–09108	
9’ (2743mm)	240402–10308	
10’ (3048mm)	240402–11508	
11’ (3353mm)	240402–12708	
12’ (3658mm)	240402–13908	
13’ (3962mm)	240402–07908	240402–07200
14’ (4267mm)	240402–09108	240402–07200
15’ (4572mm)	240402–10308	240402–07200
16’ (4877mm)	240402–11508	240402–07200
17’ (5182mm)	240402–12708	240402–07200
18’ (5486mm)	240402–13908	240402–07200
19’ (5791mm)	240402–07908	240402–14400
20’ (6096mm)	240402–09108	240402–14400
21’ (6401mm)	240402–10308	240402–14400
22’ (6706mm)	240402–11508	240402–14400
23’ (7010mm)	240402–12708	240402–14400
24’ (7315mm)	240402–13908	240402–14400

3” (76mm) to 6” (152mm) Wide Conveyor Assembly

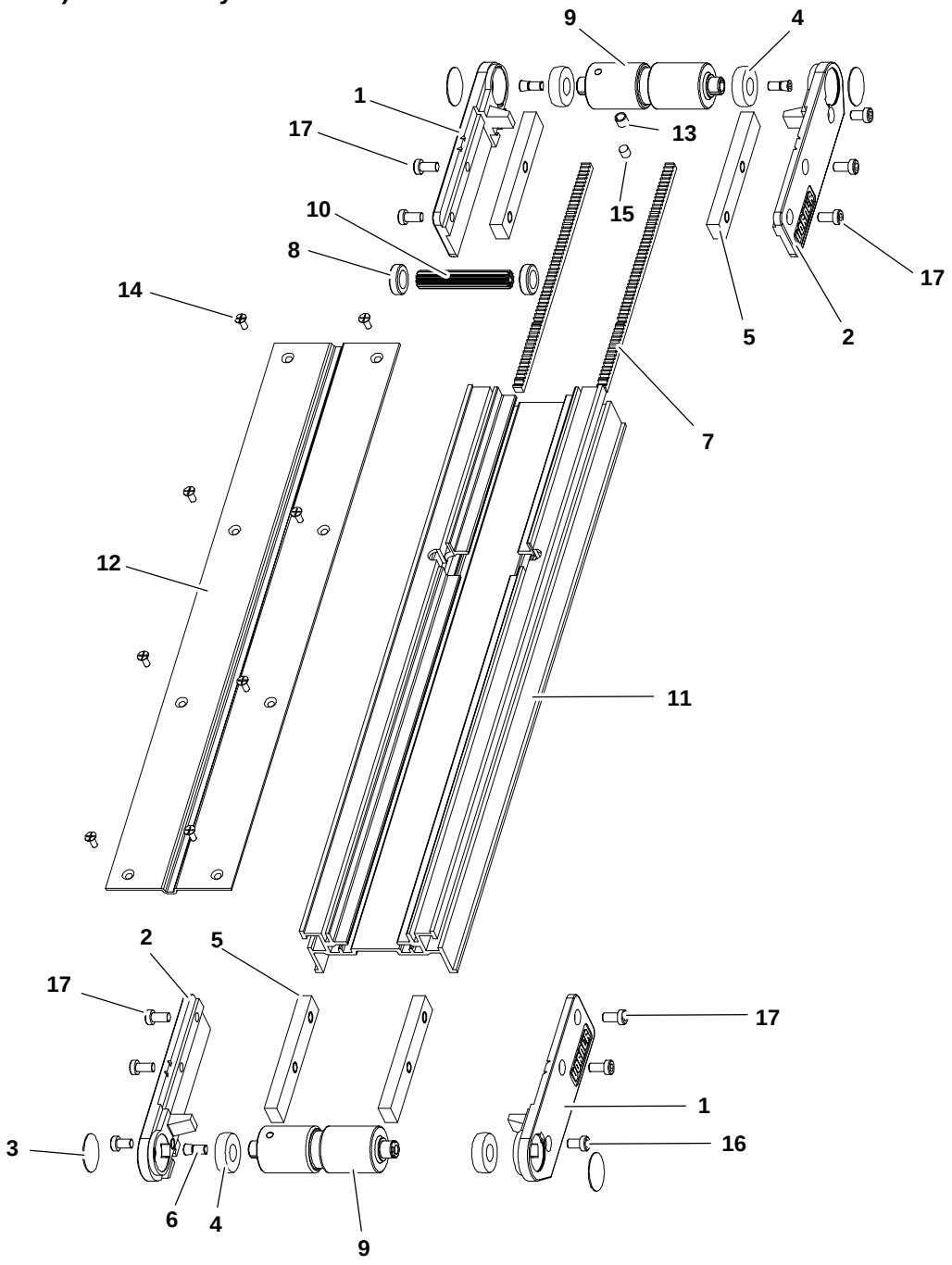

Item	Part Number	Description
1	240325	Head Plate LH
2	240326	Head Plate RH
3	240327	Bearing Cover Disk
4	240328	Bearing
5	240329	Tension Slide Bar
6	240330	Taper Screw
7	240420	Rack Gear 14.5 PA x 24 P
8	240421	Pinion Bushing
9	240703	Idler Spindle 3” (76mm)
	240704	Idler Spindle 4” (102mm)
	240705	Idler Spindle 5” (127mm)
	240706	Idler Spindle 6” (152mm)
10	203003M	Gear Pinion 3” (76mm)
	203004M	Gear Pinion 4” (102mm)
	203005M	Gear Pinion 5” (127mm)
	203006M	Gear Pinion 6” (152mm)
11	See Chart Below	Conveyor Frame
12	See Chart Below	Bed Plate
13	450226SSP	Sleeve, .25” Magnet Stainless Steel
14	807–1074	Flat Head Screw M4 x 10mm
15	808–020	Magnet .25” Dia x .25” Long
16	920691M	Socket Head Screw M6 x 10mm
17	920692M	Socket Head Screw M6 x 12mm

Item 11: Conveyor Frame	
Length	Part Number
2’ (610mm)	2404WW–01908
3’ (914mm)	2404WW–03108
4’ (1219mm)	2404WW–04308
5’ (1524mm)	2404WW–05508
6’ (1829mm)	2404WW–06708
7’ (2134mm)	2404WW–07908
8’ (2438mm)	2404WW–09108
9’ (2743mm)	2404WW–10308
10’ (3048mm)	2404WW–11508
11’ (3353mm)	2404WW–12708
12’ (3658mm)	2404WW–13908
13’ (3962mm)	2404WW–07908 2404WW–07200
14’ (4267mm)	2404WW–09108 2404WW–07200
15’ (4572mm)	2404WW–10308 2404WW–07200
16’ (4877mm)	2404WW–11508 2404WW–07200
17’ (5182mm)	2404WW–12708 2404WW–07200
18’ (5486mm)	2404WW–13908 2404WW–07200
19’ (5791mm)	2404WW–07908 2404WW–14400
20’ (6096mm)	2404WW–09108 2404WW–14400
21’ (6401mm)	2404WW–10308 2404WW–14400
22’ (6706mm)	2404WW–11508 2404WW–14400
23’ (7010mm)	2404WW–12708 2404WW–14400
24’ (7315mm)	2404WW–13908 2404WW–14400
WW = Conveyor Width reference: 03, 04, 05, 06	

Item 12: Bed Plate	
Length	Part Number
2’ (610mm)	2405WW–01904
3’ (914mm)	2405WW–03104
4’ (1219mm)	2405WW–04304
5’ (1524mm)	2405WW–05504
6’ (1829mm)	2405WW–06704
7’ (2134mm)	2405WW–07904
8’ (2438mm)	2405WW–09104
9’ (2743mm)	2405WW–10304
10’ (3048mm)	2405WW–11504
11’ (3353mm)	2405WW–12704
12’ (3658mm)	2405WW–13904
14’ (4267mm)	2405WW–09108 2405WW–07196
15’ (4572mm)	2405WW–10308 2405WW–07196
16’ (4877mm)	2405WW–11508 2405WW–07196
17’ (5182mm)	2405WW–12708 2405WW–07196
18’ (5486mm)	2405WW–13908 2405WW–07200
19’ (5791mm)	2405WW–07908 2405WW–14400
20’ (6096mm)	2405WW–09108 2405WW–14400
21’ (6401mm)	2405WW–10308 2405WW–14400
22’ (6706mm)	2405WW–11508 2405WW–14400
23’ (7010mm)	2405WW–12708 2405WW–14400
24’ (7315mm)	2405WW–13908 2405WW–14400
WW = Conveyor Width reference: 03, 04, 05, 06	

8” (203mm) to 12” (605mm) Wide Conveyor Assembly

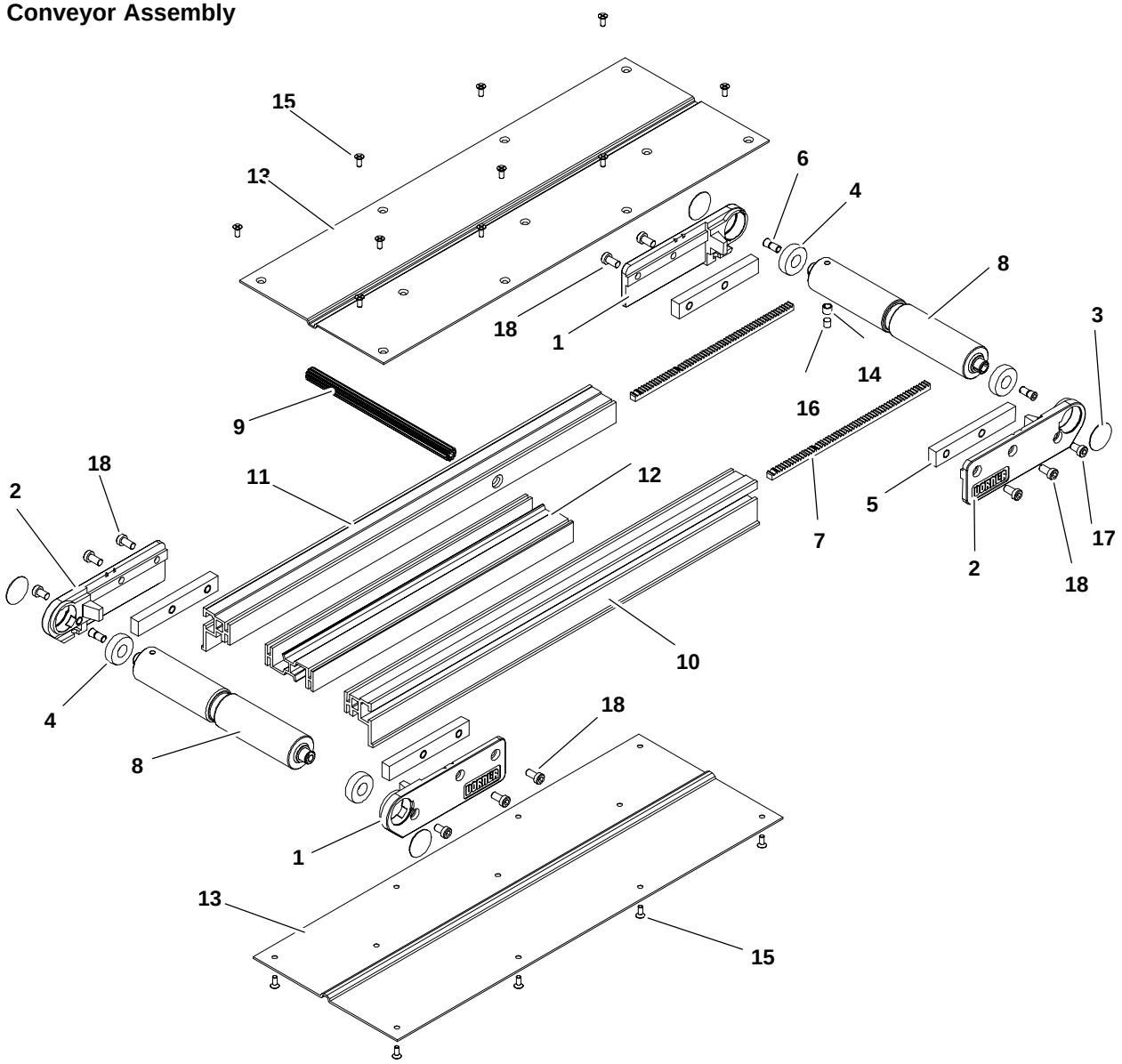

Item	Part Number	Description
1	240325	Head Plate LH
2	240326	Head Plate RH
3	240327	Bearing Cover Disk
4	240328	Bearing
5	240329	Tension Slide Bar
6	240330	Taper Screw
7	240420	Rack Gear 14.5 PA x 24P
8	240708	Idler Spindle 8” (203mm)
	240710	Idler Spindle 10” (254mm)
	240712	Idler Spindle 12” (305mm)
9	203008M	Pinion Gear 8” (203mm)

	203010M	Pinion Gear 10” (254mm)
	203012M	Pinion Gear 12” (305mm)
10	See Chart Below	Side Rail RH 8–24” Wide (203–610mm)
11	See Chart Below	Side Rail LH 8–24” Wide (203–610mm)
12	See Chart Below	Center Rail 8–12” Wide (203–305mm)
13	See Chart Below	Bed Plate
14	450226SSP	Sleeve .25 Magnet Stainless Steel
15	807–1074	Flat Head Screw M4 x 10mm
16	808–020	Magnet .25” DIA x .25” Long
17	920691M	Socket Head Screw M6 x 10mm
18	920692M	Socket Head Screw M6 x 12mm

Item 10: Side Rail RH 8–24” Wide (203–610mm)		
Length	Part Number	
2’ (610mm)	240412–01908	
3’ (914mm)	240412–03108	
4’ (1219mm)	240412–04308	
5’ (1524mm)	240412–05508	
6’ (1829mm)	240412–06708	
7’ (2134mm)	240412–07908	
8’ (2438mm)	240412–09108	
9’ (2743mm)	240412–10308	
10’ (3048mm)	240412–11508	
11’ (3353mm)	240412–12708	
12’ (3658mm)	240412–13908	
13’ (3962mm)	240412–07908	240412–07200
14’ (4267mm)	240412–09108	240412–07200
15’ (4572mm)	240412–10308	240412–07200
16’ (4877mm)	240412–11508	240412–07200
17’ (5182mm)	240412–12708	240412–07200
18’ (5486mm)	240412–13908	240412–07200
19’ (5791mm)	240412–07908	240412–14400
20’ (6096mm)	240412–09108	240412–14400
21’ (6401mm)	240412–10308	240412–14400
22’ (6706mm)	240412–11508	240412–14400
23’ (7010mm)	240412–12708	240412–14400
24’ (7315mm)	240412–13908	240412–14400

Item 11: Side Rail LH 8–24” Wide (203–610mm)		
Length	Part Number	
2’ (610mm)	240413–01908	
3’ (914mm)	240413–03108	
4’ (1219mm)	240413–04308	
5’ (1524mm)	240413–05508	
6’ (1829mm)	240413–06708	
7’ (2134mm)	240413–07908	
8’ (2438mm)	240413–09108	
9’ (2743mm)	240413–10308	
10’ (3048mm)	240413–11508	
11’ (3353mm)	240413–12708	
12’ (3658mm)	240413–13908	
13’ (3962mm)	240413–07908	240413–07200
14’ (4267mm)	240413–09108	240413–07200
15’ (4572mm)	240413–10308	240413–07200
16’ (4877mm)	240413–11508	240413–07200
17’ (5182mm)	240413–12708	240413–07200
18’ (5486mm)	240413–13908	240413–07200
19’ (5791mm)	240413–07908	240413–14400
20’ (6096mm)	240413–09108	240413–14400
21’ (6401mm)	240413–10308	240413–14400
22’ (6706mm)	240413–11508	240413–14400
23’ (7010mm)	240413–12708	240413–14400
24’ (7315mm)	240413–13908	240413–14400

Item 12: Center Rail 8–12” Wide (203–305mm)		
Length	Part Number	
2’ (610mm)	240414–00998	
3’ (914mm)	240414–02198	
4’ (1219mm)	240414–03398	
5’ (1524mm)	240414–04598	
6’ (1829mm)	240414–05798	
7’ (2134mm)	240414–06998	
8’ (2438mm)	240414–08198	
9’ (2743mm)	240414–09398	
10’ (3048mm)	240414–10598	
11’ (3353mm)	240414–11798	
12’ (3658mm)	240414–12998	
13’ (3962mm)	240414–06998	240414–07200
14’ (4267mm)	240414–08198	240414–07200
15’ (4572mm)	240414–09398	240414–07200
16’ (4877mm)	240414–10598	240414–07200
17’ (5182mm)	240414–11798	240414–07200
18’ (5486mm)	240414–12998	240414–07200
19’ (5791mm)	240414–06998	240414–14400
20’ (6096mm)	240414–08198	240414–14400
21’ (6401mm)	240414–09398	240414–14400
22’ (6706mm)	240414–10598	240414–14400
23’ (7010mm)	240414–11798	240414–14400
24’ (7315mm)	240414–12998	240414–14400

Item 13: Bed Plate		
Length	Part Number	
2’ (610mm)	2405WW–01904	
3’ (914mm)	2405WW–03104	
4’ (1219mm)	2405WW–04304	
5’ (1524mm)	2405WW–05504	
6’ (1829mm)	2405WW–06704	
7’ (2134mm)	2405WW–07904	
8’ (2438mm)	2405WW–09104	
9’ (2743mm)	2405WW–10394	
10’ (3048mm)	2405WW–11504	
11’ (3353mm)	2405WW–12704	
12’ (3658mm)	2405WW–13904	
13’ (3962mm)	2405WW–07904	2405WW–06700
14’ (4267mm)	2405WW–09104	2405WW–06700
15’ (4572mm)	2405WW–10304	2405WW–06700
16’ (4877mm)	2405WW–11504	2405WW–06700
17’ (5182mm)	2405WW–12704	2405WW–06700
18’ (5486mm)	2405WW–13904	2405WW–06700
19’ (5791mm)	2405WW–07908	2405WW–14396
20’ (6096mm)	2405WW–09108	2405WW–14396
21’ (6401mm)	2405WW–10308	2405WW–14396
22’ (6706mm)	2405WW–11508	2405WW–14396
23’ (7010mm)	2405WW–12708	2405WW–14396
24’ (7315mm)	2405WW–13908	2405WW–14396
WW = Conveyor Width reference: 08, 10, 12		

18” (457mm) to 24” (610mm)
Wide Conveyor Assembly

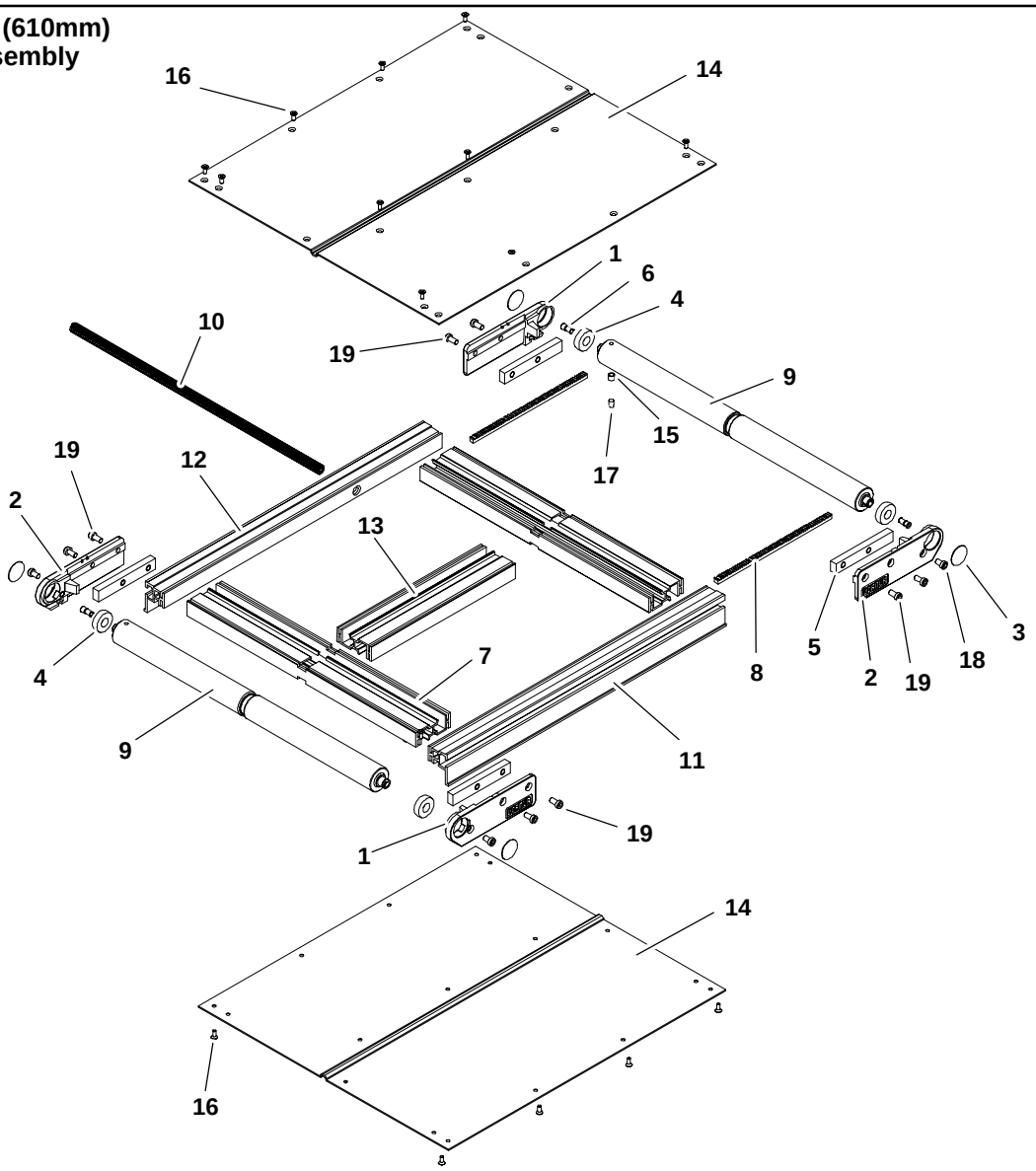

Item	Part Number	Description
1	240325	Head Plate LH
2	240326	Head Plate RH
3	240327	Bearing Cover Disk
4	240328	Bearing
5	240329	Tension Slide Bar
6	240330	Taper Screw
7	240417	Center Rail Cross Support 18” (457mm)
	240418	Center Rail Cross Support 21” (533mm)
	240419	Center Rail Cross Support 24” (610mm)
8	240420	Rack Gear 14.5 PA x 24P
9	240718	Idler Spindle 18” (457mm)
	240721	Idler Spindle 21” (533mm)
	240724	Idler Spindle 24” (610mm)
10	203018M	Pinion Gear 18” (457mm)

	203021M	Pinion Gear 21” (533mm)
	203024M	Pinion Gear 24” (610mm)
11	See Chart Below	Side Rail RH 8–24” Wide (203–610mm)
12	See Chart Below	Side Rail LH 8–24” Wide (203–610mm)
13	See Chart Below	Center Rail 8–12” Wide (203–305mm)
14	See Chart Below	Bed Plate
15	450226SSP	Sleeve .25 Magnet Stainless Steel
16	807–1074	Flat Head Screw M4 x 10mm
17	808–020	Magnet .25” DIA x .25” Long
18	920691M	Socket Head Screw M6 x 10mm
19	920692M	Socket Head Screw M6 x 12mm

Item 11: Side Rail RH 8–24” Wide (203–610mm)		
Length	Part Number	
2’ (610mm)	240412–01908	
3’ (914mm)	240412–03108	
4’ (1219mm)	240412–04308	
5’ (1524mm)	240412–05508	
6’ (1829mm)	240412–06708	
7’ (2134mm)	240412–07908	
8’ (2438mm)	240412–09108	
9’ (2743mm)	240412–10308	
10’ (3048mm)	240412–11508	
11’ (3353mm)	240412–12708	
12’ (3658mm)	240412–13908	
13’ (3962mm)	240412–07908	240412–07200
14’ (4267mm)	240412–09108	240412–07200
15’ (4572mm)	240412–10308	240412–07200
16’ (4877mm)	240412–11508	240412–07200
17’ (5182mm)	240412–12708	240412–07200
18’ (5486mm)	240412–13908	240412–07200
19’ (5791mm)	240412–07908	240412–14400
20’ (6096mm)	240412–09108	240412–14400
21’ (6401mm)	240412–10308	240412–14400
22’ (6706mm)	240412–11508	240412–14400
23’ (7010mm)	240412–12708	240412–14400
24’ (7315mm)	240412–13908	240412–14400

Item 12: Side Rail LH 8–24” Wide (203–610mm)		
Length	Part Number	
2’ (610mm)	240413–01908	
3’ (914mm)	240413–03108	
4’ (1219mm)	240413–04308	
5’ (1524mm)	240413–05508	
6’ (1829mm)	240413–06708	
7’ (2134mm)	240413–07908	
8’ (2438mm)	240413–09108	
9’ (2743mm)	240413–10308	
10’ (3048mm)	240413–11508	
11’ (3353mm)	240413–12708	
12’ (3658mm)	240413–13908	
13’ (3962mm)	240413–07908	240413–07200
14’ (4267mm)	240413–09108	240413–07200
15’ (4572mm)	240413–10308	240413–07200
16’ (4877mm)	240413–11508	240413–07200
17’ (5182mm)	240413–12708	240413–07200
18’ (5486mm)	240413–13908	240413–07200
19’ (5791mm)	240413–07908	240413–14400
20’ (6096mm)	240413–09108	240413–14400
21’ (6401mm)	240413–10308	240413–14400
22’ (6706mm)	240413–11508	240413–14400
23’ (7010mm)	240413–12708	240413–14400
24’ (7315mm)	240413–13908	240413–14400

Item 13: Center Rail 18–24” Wide (203–305mm)		
Length	Part Number	
2’ (610mm)	240414–00998	
3’ (914mm)	240414–02198	
4’ (1219mm)	240414–03398	
5’ (1524mm)	240414–04598	
6’ (1829mm)	240414–05798	
7’ (2134mm)	240414–06998	
8’ (2438mm)	240414–08198	
9’ (2743mm)	240414–09398	
10’ (3048mm)	240414–10598	
11’ (3353mm)	240414–11798	
12’ (3658mm)	240414–12998	
13’ (3962mm)	240414–06998	240414–06700
14’ (4267mm)	240414–08198	240414–06700
15’ (4572mm)	240414–09398	240414–06700
16’ (4877mm)	240414–10598	240414–06700
17’ (5182mm)	240414–11798	240414–06700
18’ (5486mm)	240414–12998	240414–06700
19’ (5791mm)	240414–06998	240414–13900
20’ (6096mm)	240414–08198	240414–13900
21’ (6401mm)	240414–09398	240414–13900
22’ (6706mm)	240414–10598	240414–13900
23’ (7010mm)	240414–11798	240414–13900
24’ (7315mm)	240414–12998	240414–13900

Item 14: Bed Plate		
Length	Part Number	
2’ (610mm)	2405WW–01904	
3’ (914mm)	2405WW–03104	
4’ (1219mm)	2405WW–04304	
5’ (1524mm)	2405WW–05504	
6’ (1829mm)	2405WW–06704	
7’ (2134mm)	2405WW–07904	
8’ (2438mm)	2405WW–09104	
9’ (2743mm)	2405WW–10394	
10’ (3048mm)	2405WW–11504	
11’ (3353mm)	2405WW–12704	
12’ (3658mm)	2405WW–13904	
13’ (3962mm)	2405WW–07904	2405WW–06700
14’ (4267mm)	2405WW–09104	2405WW–06700
15’ (4572mm)	2405WW–10304	2405WW–06700
16’ (4877mm)	2405WW–11504	2405WW–06700
17’ (5182mm)	2405WW–12704	2405WW–06700
18’ (5486mm)	2405WW–13904	2405WW–06700
19’ (5791mm)	2405WW–07908	2405WW–14396
20’ (6096mm)	2405WW–09108	2405WW–14396
21’ (6401mm)	2405WW–10308	2405WW–14396
22’ (6706mm)	2405WW–11508	2405WW–14396
23’ (7010mm)	2405WW–12708	2405WW–14396
24’ (7315mm)	2405WW–13908	2405WW–14396
WW = Conveyor Width reference: 08, 10, 12		

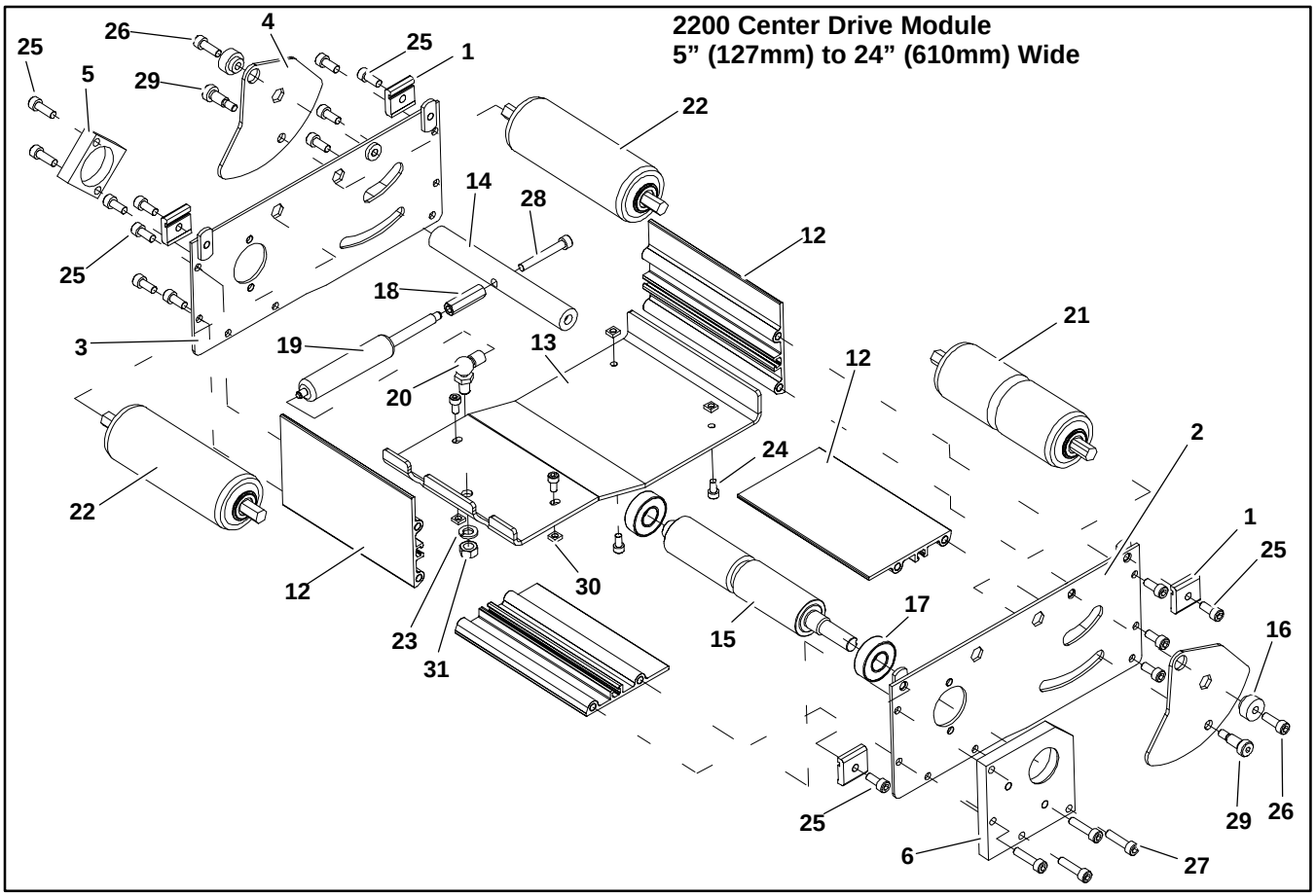

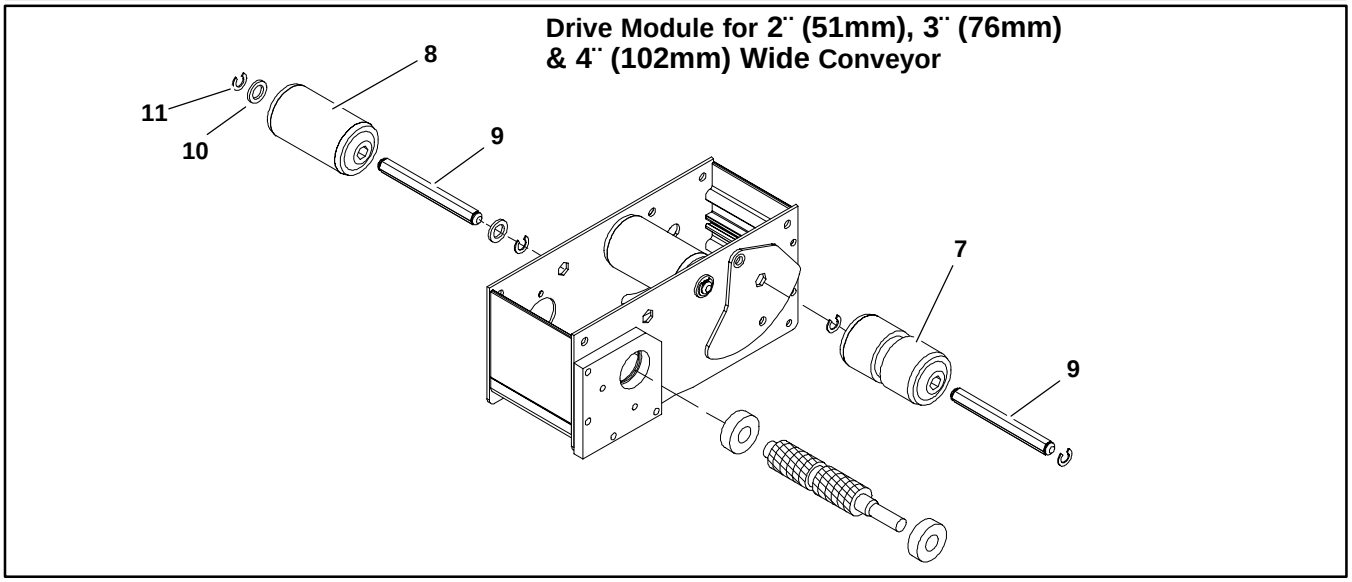

Item	Part Number	Description
1	204566	Module Mounting Clip
2	202633M	Side Plate LH
3	202634M	Side Plate RH
4	463026	Pivot Tension Plate
5	463028M	Bearing Mounting Block
6	463029M	Bearing–Drive Mounting Plate

7	463044	Roller 1.9” .44hex Grv 2” (51mm)
	463045	Roller 1.9” .44hex Grv 3” (76mm)
	807–1001	Roller 1.9” .44hex Grv 4” (102mm)
8	463046	Roller 1.9” .44hex SS Flat 2” (51mm)
	807–1007	Roller 1.9” .44hex SS Flat 3” (76mm)
	807–1008	Roller 1.9” .44hex SS Flat 4” (102mm)

9	915-215	E-Ring Clip (0.44 diameter)
10	801-115	Washer
11	463402	Pulley Shaft 2” (51mm)
	463403	Pulley Shaft 3” (76mm)
	463404	Pulley Shaft 4” (102mm)
12	463802	Center Drive Rail 2” (51mm)
	463803	Center Drive Rail 3” (76mm)
	463804	Center Drive Rail 4” (102mm)
	463805	Center Drive Rail 5” (127mm)
	463806	Center Drive Rail 6” (152mm)
	463808	Center Drive Rail 8” (203mm)
	463810	Center Drive Rail 10” (254mm)
	463812	Center Drive Rail 12” (305mm)
	463818	Center Drive Rail 18” (457mm)
	463821	Center Drive Rail 21” (533mm)
	463824	Center Drive Rail 24” (610mm)
13	463202M	Center Dr Bottom Cover 2” (51mm)
	463203M	Center Dr Bottom Cover 3” (76mm)
	463204M	Center Dr Bottom Cover 4” (102mm)
	463205M	Center Dr Bottom Cover 5” (127mm)
	463206M	Center Dr Bottom Cover 6” (152mm)
	463208M	Center Dr Bottom Cover 8” (203mm)
	463210M	Center Dr Bottom Cover 10” (254mm)
	463212M	Center Dr Bottom Cover 12” (305mm)
	463218M	Center Dr Bottom Cover 18” (457mm)
	463205M 463208M 463208M	Center Dr Bottom Cover 21” (533mm)
	463212M 463212M	Center Dr Bottom Cover 24” (610mm)
14	463302M	Center Dr Tensioning Rod 2” (51mm)
	463303M	Center Dr Tensioning Rod 3” (76mm)
	463304M	Center Dr Tensioning Rod 4” (102mm)
	463305M	Center Dr Tensioning Rod 5” (127mm)
	463306M	Center Dr Tensioning Rod 6” (152mm)
	463308M	Center Dr Tensioning Rod 8” (203mm)
	463310M	Cntr Dr Tensioning Rod 10” (254mm)
	463312M	Cntr Dr Tensioning Rod 12” (305mm)
	463318M	Cntr Dr Tensioning Rod 18” (457mm)
	463321M	Cntr Dr Tensioning Rod 21” (533mm)
	463324M	Cntr Dr Tensioning Rod 24” (610mm)
15	463702M	Center Drive Spindle 2” (51mm)
	463703M	Center Drive Spindle 3” (76mm)
	463704M	Center Drive Spindle 4” (102mm)
	463705M	Center Drive Spindle 5” (127mm)

	463706M	Center Drive Spindle 6” (152mm)
	463708M	Center Drive Spindle 8” (203mm)
	463710M	Center Drive Spindle 10” (254mm)
	463712M	Center Drive Spindle 12” (305mm)
	463718M	Center Drive Spindle 18” (457mm)
	463721M	Center Drive Spindle 21” (533mm)
	463724M	Center Drive Spindle 24” (610mm)
16	801–117	Nylon Bushing
17	802–124	Ball Bearing
18	807–983	Hex Standoff 13mm x 35mm LG M6
19	807–1040	Gas Spring 8mm DIA x 1.97 ST 2” (51mm) Wide
	807–986	Gas Spring 8mm DIA x 1.97 ST 3” (76mm) Wide
	807–985	Gas Spring 8mm DIA x 1.97 ST 4–6” (102–152mm) Wide
	807–984	Gas Spring 8mm DIA x 1.97 ST 8–12” (203–305mm) Wide
	807–985 807–985	Gas Spring 8mm DIA x 1.97 ST 18–24” (457–610mm) Wide
20	807–987	Steel Ball Joint M6 x M8
21	807–1002	Roller 1.9” .44 Hex Grv 5” (127mm)
	807–1003	Roller 1.9” .44 Hex Grv 6” (152mm)
	807–1004	Roller 1.9” .44 Hex Grv 8” (203mm)
	807–1005	Roller 1.9” .44 Hex Grv 10” (203mm)
	807–1006	Roller 1.9” .44 Hex Grv 12” (305mm)
	807–1091	Roller 1.9” .44 Hex Grv 18” (457mm)
	807–1092	Roller 1.9” .44 Hex Grv 21” (533mm)
	807–1093	Roller 1.9” .44 Hex Grv 24” (610mm)
22	807–1009	Roller 1.9” .44 Hex Flat 5” (51mm)
	807–1010	Roller 1.9” .44 Hex Flat 6” (152mm)
	807–1011	Roller 1.9” .44 Hex Flat 8” (203mm)
	807–1012	Roller 1.9” .44 Hex Flat 10” (203mm)
	807–1013	Roller 1.9” .44 Hex Flat 12” (305mm)
	807–1088	Roller 1.9” .44 Hex Flat 18” (457mm)
	807–1089	Roller 1.9” .44 Hex Flat 21” (533mm)
	807–1090	Roller 1.9” .44 Hex Flat 24” (610mm)
23	911–120	Spring Lock Washer
24	920510M	Socket Head Screw M5 x 10mm
25	920614M	Socket Head Screw M6 x 14mm
26	920618M	Socket Head Screw M6 x 18mm
27	920625M	Socket Head Screw M6 x 25mm
28	920625M	Socket Head Screw M6 x 25mm
29	940812M	SHLD Screw 8mm DIA x 12mm
30	990503M	hex Nut, Full M5 – .8
31	990801M	Hex Nut, Full M8 – 1.25

Service Parts

Nosebar End Assembly 2” (51mm) to 24” (610mm) Wide

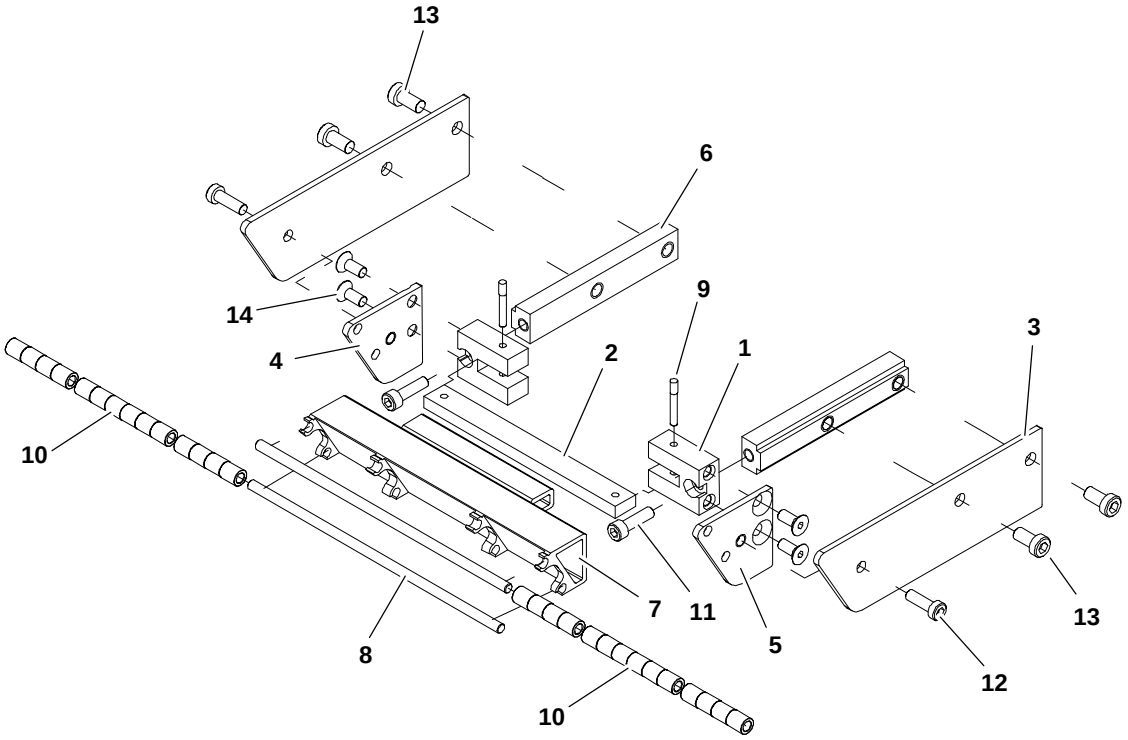

Item	Part Number	Description
1	201965	Mounting Block, PLT Spindle
2	207602	Flex–Link Bar 2” (51mm)
	207603	Flex–Link Bar 3” (76mm)
	207604	Flex–Link Bar 4” (102mm)
	207605	Flex–Link Bar 5” (127mm)
	207606	Flex–Link Bar 6” (152mm)
	207608	Flex–Link Bar 8” (203mm)
	207610	Flex–Link Bar 10” (254mm)
	207612	Flex–Link Bar 12” (305mm)
	207618	Flex–Link Bar 18” (457mm)
	207621	Flex–Link Bar 21” (533mm)
	207624	Flex–Link Bar 24” (610mm)
3	241125	Outer Side Plate
4	241126	Inner Side Plate LH
5	241127	Inner Side Plate RH
6	241128	Head Plate Bar
7	241202	Nosebar 2” (51mm)
	241203	Nosebar 3” (76mm)
	241204	Nosebar 4” (102mm)
	241205	Nosebar 5” (127mm)
	241206	Nosebar 6” (152mm)
	241208	Nosebar 8” (203mm)
	241210	Nosebar 10” (254mm)
	241212	Nosebar 12” (305mm)
	241218	Nosebar 18” (457mm)
	241221	Nosebar 21” (533mm)
	241224	Nosebar 24” (610mm)
8	241302	Nosebar Rod 2” (51mm)
	241303	Nosebar Rod 3” (76mm)
	241304	Nosebar Rod 4” (102mm)
	241305	Nosebar Rod 5” (127mm)
	241306	Nosebar Rod 6” (152mm)
	241308	Nosebar Rod 8” (203mm)
	241310	Nosebar Rod 10” (254mm)
	241312	Nosebar Rod 12” (305mm)
	241318	Nosebar Rod 18” (457mm)
	241321	Nosebar Rod 21” (533mm)
	241324	Nosebar Rod 24” (610mm)
9	200695P	Knurl Pin .125” DIA x .937” Lg
10	801–122	Nose Bar Roller
11	920518M	Socket Head Screw M5 x 18mm
12	920593M	Socket Head Screw M5 x 16mm
13	920692M	Socket Head Screw M6 x 12mm
14	930512M	Flat Head Screw M5 x 12mm

–04 3” (76mm) Aluminum Side

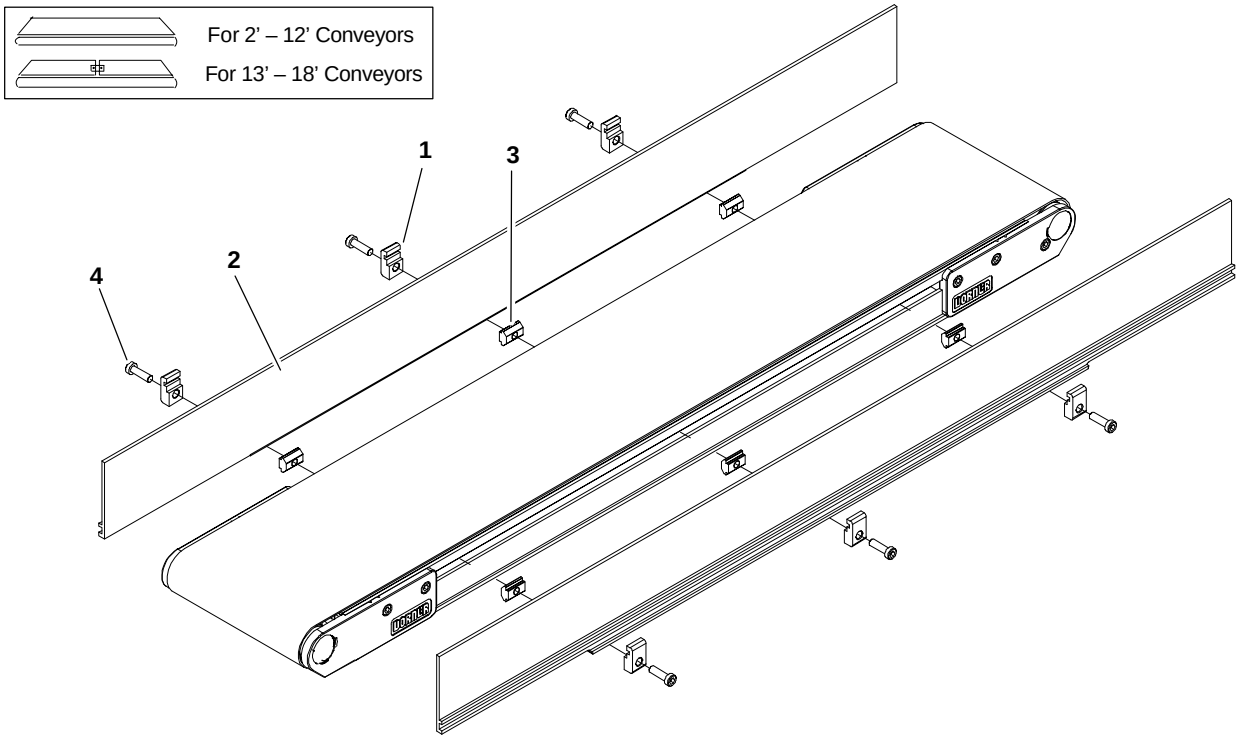

Item	Part Number	Description
1	200121	Guide Retaining Clip
2	See Chart Below	2200 Guide 3” (76mm) HS
3	200695P	Single Drop–in Tee Bar
4	920694M	Socket Head Screw M6 x 20mm

Item 2: 2200 Guide 3” (76mm) HS			
Length		End Guide	End Guide
2’ (610mm)	Left Hand	280403–02400	N/A
	Right Hand	280403–02400	N/A
3’ (914mm)	Left Hand	280403–03600	N/A
	Right Hand	280403–03600	N/A
4’ (1219mm)	Left Hand	280403–04800	N/A
	Right Hand	280403–04800	N/A
5’ (1524mm)	Left Hand	280403–06000	N/A
	Right Hand	280403–06000	N/A
6’ (1829mm)	Left Hand	280403–07200	N/A
	Right Hand	280403–07200	N/A
7’ (2134mm)	Left Hand	280403–08400	N/A
	Right Hand	280403–08400	N/A
8’ (2438mm)	Left Hand	280403–09600	N/A
	Right Hand	280403–09600	N/A
9’ (2743mm)	Left Hand	280403–10800	N/A
	Right Hand	280403–10800	N/A
10’ (3048mm)	Left Hand	280403–12000	N/A
	Right Hand	280403–12000	N/A
11’ (3353mm)	Left Hand	280403–13200	N/A
	Right Hand	280403–13200	N/A
12’ (3658mm)	Left Hand	280403–14400	N/A
	Right Hand	280403–14400	N/A
13’ (3962mm)	Left Hand	280401–07500	280401–08100
	Right Hand	280402–07500	280402–08100
14’ (4267mm)	Left Hand	280401–07500	280401–09300
	Right Hand	280402–07500	280402–09300
15’ (4572mm)	Left hand	280401–07500	280401–10500
	Right Hand	280402–07500	280402–10500
16’ (4877mm)	Left Hand	280401–07500	280401–11700
	Right Hand	280402–07500	280402–11700
17’ (5182mm)	Left Hand	280401–07500	280401–12900
	Right Hand	280402–07500	280402–12900
18’ (5486mm)	Left Hand	280401–07500	280401–14100
	Right Hand	280402–07500	280402–14100
19’ (5791mm)	Left Hand	280401–08100	280401–14700
	Right Hand	280402–08100	280402–14700
20’ (6096mm)	Left Hand	280401–09300	280401–14700
	Right Hand	280402–09300	280402–14700
21’ (6401mm)	Left Hand	280401–10500	280401–14700
	Right Hand	280402–10500	280402–14700
22’ (6706mm)	Left Hand	280401–11700	280401–14700
	Right Hand	280402–11700	280402–14700
23’ (7010mm)	Left Hand	280401–12900	280401–14700
	Right Hand	280402–12900	280402–14700
24’ (7315mm)	Left Hand	280401–14100	280401–14700
	Right Hand	280402–14100	280402–14700

Service Parts

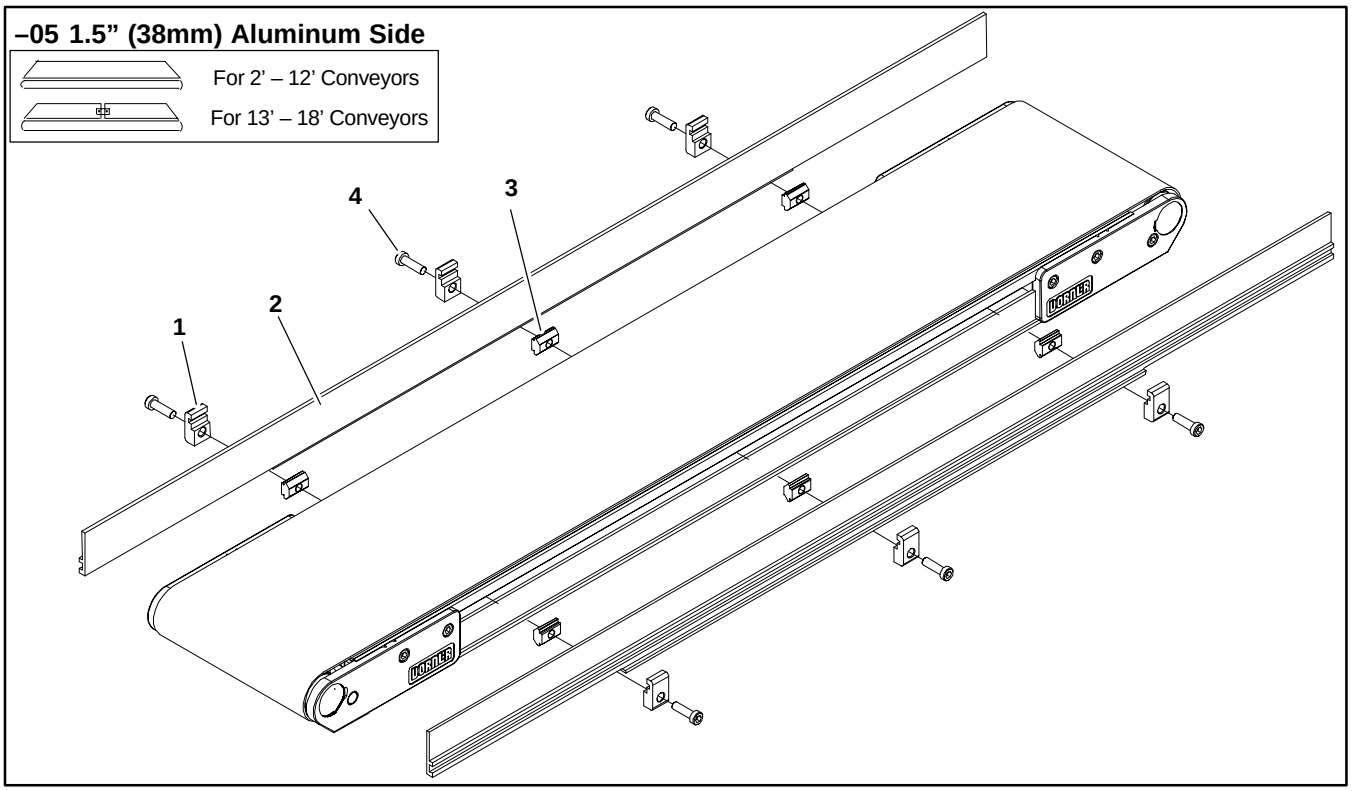

Item	Part Number	Description
1	200121	Guide Retaining Clip
2	See Chart Below	2200 Guide .5” (13mm) HS
3	639971M	Single Drop–in Tee Bar
4	920694M	Socket Head Screw M6 x 20mm

Item 2: 2200 Guide .5” (13mm) HS			
Length		End Guide	End Guide
2’ (610mm)	Left Hand	280503–02400	N/A
	Right Hand	280503–02400	N/A
3’ (914mm)	Left Hand	280503–03600	N/A
	Right Hand	280503–03600	N/A
4’ (1219mm)	Left Hand	280503–04800	N/A
	Right Hand	280503–04800	N/A
5’ (1524mm)	Left Hand	280503–06000	N/A
	Right Hand	280503–06000	N/A
6’ (1829mm)	Left Hand	280503–07200	N/A
	Right Hand	280503–07200	N/A
7’ (2134mm)	Left Hand	280503–08400	N/A
	Right Hand	280503–08400	N/A
8’ (2438mm)	Left Hand	280503–09600	N/A
	Right Hand	280503–09600	N/A
9’ (2743mm)	Left Hand	280503–10800	N/A
	Right Hand	280503–10800	N/A
10’ (3048mm)	Left Hand	280503–12000	N/A
	Right Hand	280503–12000	N/A
11’ (3353mm)	Left Hand	280503–13200	N/A
	Right Hand	280503–13200	N/A
12’ (3658mm)	Left Hand	280503–14400	N/A
	Right Hand	280503–14400	N/A
13’ (3962mm)	Left Hand	280501–07500	280501–08100
	Right Hand	280502–07500	280502–08100
14’ (4267mm)	Left Hand	280501–07500	280501–09300
	Right Hand	280502–07500	280502–09300
15’ (4572mm)	Left hand	280501–07500	280501–10500
	Right Hand	280502–07500	280502–10500
16’ (4877mm)	Left Hand	280501–07500	280501–11700
	Right Hand	280502–07500	280502–11700
17’ (5182mm)	Left Hand	280501–07500	280501–12900
	Right Hand	280502–07500	280502–12900
18’ (5486mm)	Left Hand	280501–07500	280501–14100
	Right Hand	280502–07500	280502–14100
19’ (5791mm)	Left Hand	280501–08100	280501–14700
	Right Hand	280502–08100	280502–14700
20’ (6096mm)	Left Hand	280501–09300	280501–14700
	Right Hand	280502–09300	280502–14700
21’ (6401mm)	Left Hand	280501–10500	280501–14700
	Right Hand	280502–10500	280502–14700
22’ (6706mm)	Left Hand	280501–11700	280501–14700
	Right Hand	280502–11700	280502–14700
23’ (7010mm)	Left Hand	280501–12900	280501–14700
	Right Hand	280502–12900	280502–14700
24’ (7315mm)	Left Hand	280501–14100	280501–14700
	Right Hand	280502–14100	280502–14700

–07 Low to Side Wiper

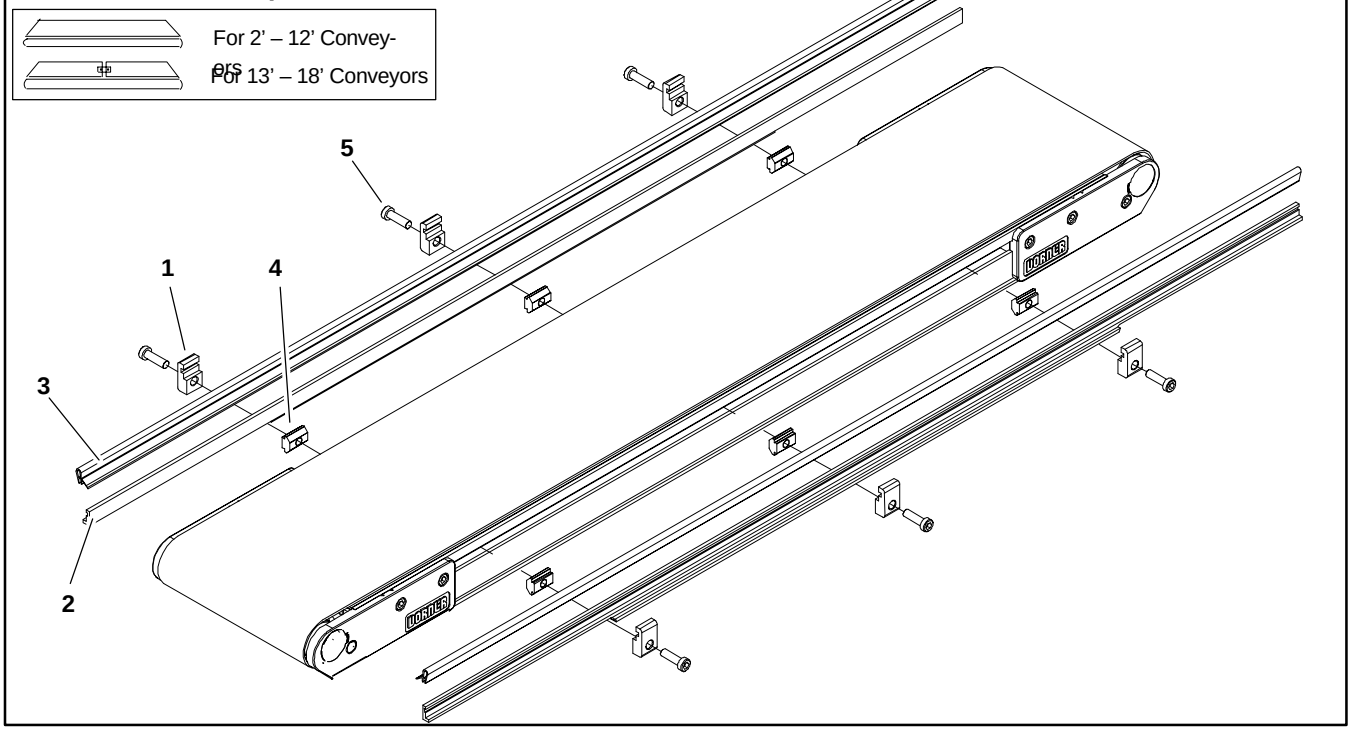

Item	Part Number	Description
1	200121	Guide Retaining Clip
2	See Chart Below	2200 Guide .5" (13mm) HS
3	41–00–24	Side Wiper Nylatron (per foot)
4	639971M	Single Drop–in Tee Bar
5	920694M	Socket Head Screw M6 x 20mm

Item 2: 2200 Guide .5" (13mm) HS			
Length		End Guide	End Guide
2' (610mm)	Left Hand	280903–02400	N/A
	Right Hand	280903–02400	N/A
3' (914mm)	Left Hand	280903–03600	N/A
	Right Hand	280903–03600	N/A
4' (1219mm)	Left Hand	280903–04800	N/A
	Right Hand	280903–04800	N/A
5' (1524mm)	Left Hand	280903–06000	N/A
	Right Hand	280903–06000	N/A
6' (1829mm)	Left Hand	280903–07200	N/A
	Right Hand	280903–07200	N/A
7' (2134mm)	Left Hand	280903–08400	N/A
	Right Hand	280903–08400	N/A
8' (2438mm)	Left Hand	280903–09600	N/A
	Right Hand	280903–09600	N/A
9' (2743mm)	Left Hand	280903–10800	N/A
	Right Hand	280903–10800	N/A
10' (3048mm)	Left Hand	280903–12000	N/A
	Right Hand	280903–12000	N/A
11' (3353mm)	Left Hand	280903–13200	N/A
	Right Hand	280903–13200	N/A
12' (3658mm)	Left Hand	280903–14400	N/A
	Right Hand	280903–14400	N/A
13' (3962mm)	Left Hand	280901–07500	280901–08100
	Right Hand	280902–07500	280902–08100
14' (4267mm)	Left Hand	280901–07500	280901–09300
	Right Hand	280902–07500	280902–09300
15' (4572mm)	Left hand	280901–07500	280901–10500
	Right Hand	280902–07500	280902–10500
16' (4877mm)	Left Hand	280901–07500	280901–11700
	Right Hand	280902–07500	280902–11700
17' (5182mm)	Left Hand	280901–07500	280901–12900
	Right Hand	280902–07500	280902–12900
18' (5486mm)	Left Hand	280901–07500	280901–14100
	Right Hand	280902–07500	280902–14100
19' (5791mm)	Left Hand	280901–08100	280901–14700
	Right Hand	280902–08100	280902–14700
20' (6096mm)	Left Hand	280901–09300	280901–14700
	Right Hand	280902–09300	280902–14700
21' (6401mm)	Left Hand	280901–10500	280901–14700
	Right Hand	280902–10500	280902–14700
22' (6706mm)	Left Hand	280901–11700	280901–14700
	Right Hand	280902–11700	280902–14700
23' (7010mm)	Left Hand	280901–12900	280901–14700
	Right Hand	280902–12900	280902–14700
24' (7315mm)	Left Hand	280901–14100	280901–14700
	Right Hand	280902–14100	280902–14700

Service Parts

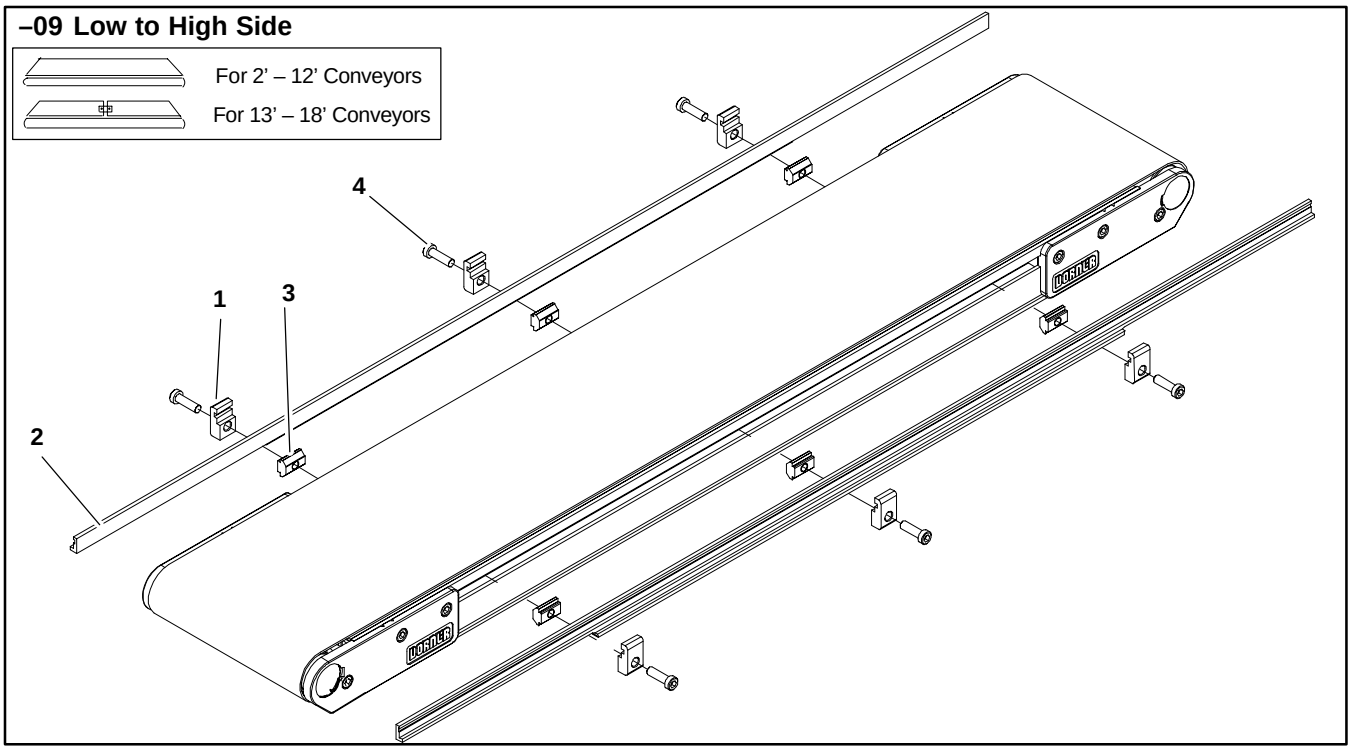

Item	Part Number	Description
1	200121	Guide Retaining Clip
2	See Chart Below	2200 Guide .5” (13mm) HS
3	639971M	Single Drop–in Tee Bar
4	920694M	Socket Head Screw M6 x 20mm

Item 2: 2200 Guide .5” (13mm) HS

Length		End Guide	End Guide
2’ (610mm)	Left Hand	280903–02400	N/A
	Right Hand	280903–02400	N/A
3’ (914mm)	Left Hand	280903–03600	N/A
	Right Hand	280903–03600	N/A
4’ (1219mm)	Left Hand	280903–04800	N/A
	Right Hand	280903–04800	N/A
5’ (1524mm)	Left Hand	280903–06000	N/A
	Right Hand	280903–06000	N/A
6’ (1829mm)	Left Hand	280903–07200	N/A
	Right Hand	280903–07200	N/A
7’ (2134mm)	Left Hand	280903–08400	N/A
	Right Hand	280903–08400	N/A
8’ (2438mm)	Left Hand	280903–09600	N/A
	Right Hand	280903–09600	N/A
9’ (2743mm)	Left Hand	280903–10800	N/A
	Right Hand	280903–10800	N/A
10’ (3048mm)	Left Hand	280903–12000	N/A
	Right Hand	280903–12000	N/A
11’ (3353mm)	Left Hand	280903–13200	N/A
	Right Hand	280903–13200	N/A
12’ (3658mm)	Left Hand	280903–14400	N/A
	Right Hand	280903–14400	N/A
13’ (3962mm)	Left Hand	280901–07500	280901–08100
	Right Hand	280902–07500	280902–08100
14’ (4267mm)	Left Hand	280901–07500	280901–09300
	Right Hand	280902–07500	280902–09300
15’ (4572mm)	Left hand	280901–07500	280901–10500
	Right Hand	280902–07500	280902–10500
16’ (4877mm)	Left Hand	280901–07500	280901–11700
	Right Hand	280902–07500	280902–11700
17’ (5182mm)	Left Hand	280901–07500	280901–12900
	Right Hand	280902–07500	280902–12900
18’ (5486mm)	Left Hand	280901–07500	280901–14100
	Right Hand	280902–07500	280902–14100
19’ (5791mm)	Left Hand	280901–08100	280901–14700
	Right Hand	280902–08100	280902–14700
20’ (6096mm)	Left Hand	280901–09300	280901–14700
	Right Hand	280902–09300	280902–14700
21’ (6401mm)	Left Hand	280901–10500	280901–14700
	Right Hand	280902–10500	280902–14700
22’ (6706mm)	Left Hand	280901–11700	280901–14700
	Right Hand	280902–11700	280902–14700
23’ (7010mm)	Left Hand	280901–12900	280901–14700
	Right Hand	280902–12900	280902–14700
24’ (7315mm)	Left Hand	280901–14100	280901–14700
	Right Hand	280902–14100	280902–14700

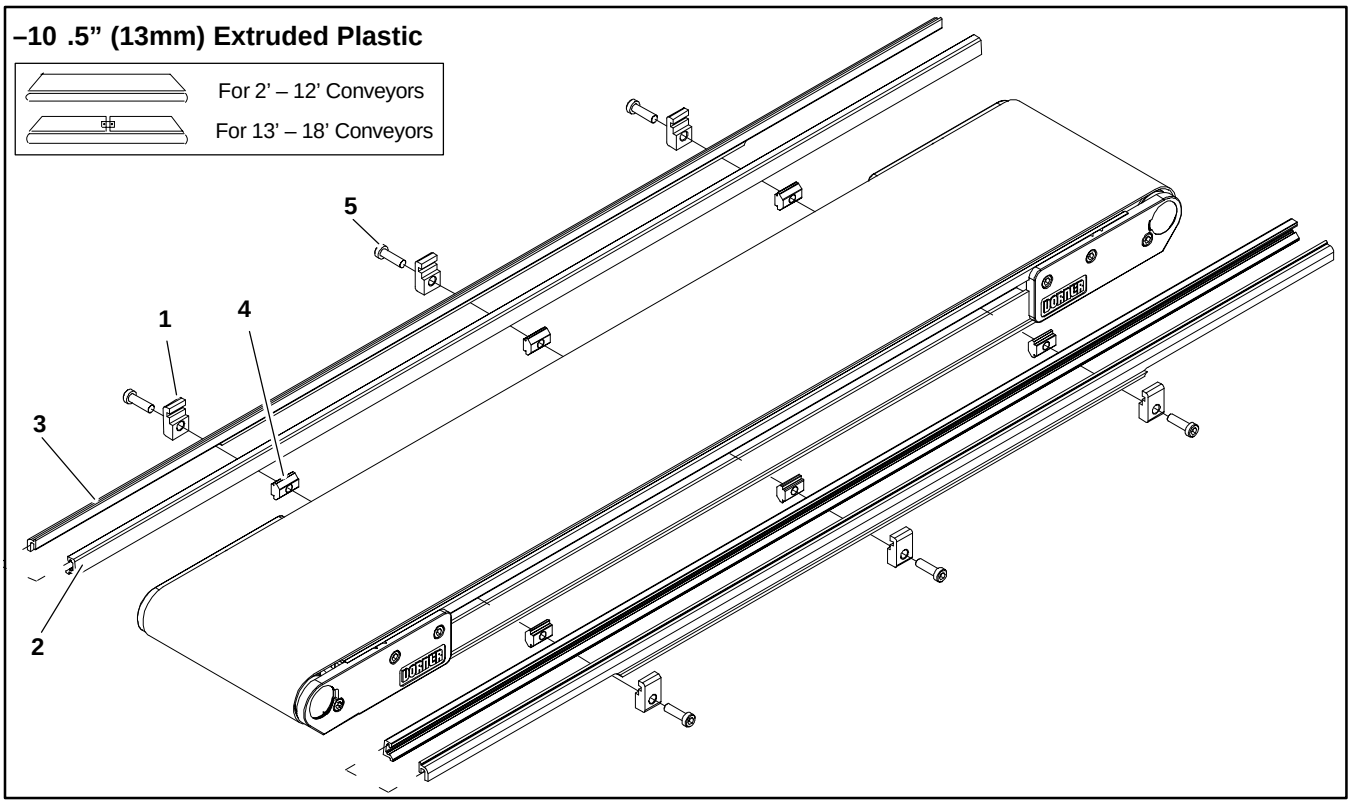

Item	Part Number	Description
1	200121	Guide Retaining Clip
2	200054P	Snap–On Guide (per foot)
3	See Chart Below	2200 Guide
4	639971M	Single Drop–in Tee Bar
5	920694M	Socket Head Screw M6 x 20mm

Item 3: 2200 Guide

Length		End Guide	End Guide
2’ (610mm)	Left Hand	281003–02400	N/A
	Right Hand	281003–02400	N/A
3’ (914mm)	Left Hand	281003–03600	N/A
	Right Hand	281003–03600	N/A
4’ (1219mm)	Left Hand	281003–04800	N/A
	Right Hand	281003–04800	N/A
5’ (1524mm)	Left Hand	281003–06000	N/A
	Right Hand	281003–06000	N/A
6’ (1829mm)	Left Hand	281003–07200	N/A
	Right Hand	281003–07200	N/A
7’ (2134mm)	Left Hand	281003–08400	N/A
	Right Hand	281003–08400	N/A
8’ (2438mm)	Left Hand	281003–09600	N/A
	Right Hand	281003–09600	N/A
9’ (2743mm)	Left Hand	281003–10800	N/A
	Right Hand	281003–10800	N/A
10’ (3048mm)	Left Hand	281003–12000	N/A
	Right Hand	281003–12000	N/A
11’ (3353mm)	Left Hand	281003–13200	N/A
	Right Hand	281003–13200	N/A
12’ (3658mm)	Left Hand	281003–14400	N/A
	Right Hand	281003–14400	N/A
13’ (3962mm)	Left Hand	281001–07500	281001–08100
	Right Hand	281002–07500	281002–08100
14’ (4267mm)	Left Hand	281001–07500	281001–09300
	Right Hand	281002–07500	281002–09300
15’ (4572mm)	Left hand	281001–07500	281001–10500
	Right Hand	281002–07500	281002–10500
16’ (4877mm)	Left Hand	281001–07500	281001–11700
	Right Hand	281002–07500	281002–11700
17’ (5182mm)	Left Hand	281001–07500	281001–12900
	Right Hand	281002–07500	281002–12900
18’ (5486mm)	Left Hand	281001–07500	281001–14100
	Right Hand	281002–07500	281002–14100
19’ (5791mm)	Left Hand	281001–08100	281001–14700
	Right Hand	281002–08100	281002–14700
20’ (6096mm)	Left Hand	281001–09300	281001–14700
	Right Hand	281002–09300	281002–14700
21’ (6401mm)	Left Hand	281001–10500	281001–14700
	Right Hand	281002–10500	281002–14700
22’ (6706mm)	Left Hand	281001–11700	281001–14700
	Right Hand	281002–11700	281002–14700
23’ (7010mm)	Left Hand	281001–12900	281001–14700
	Right Hand	281002–12900	281002–14700
24’ (7315mm)	Left Hand	281001–14100	281001–14700
	Right Hand	281002–14100	281002–14700

–13 Adjustable Guiding

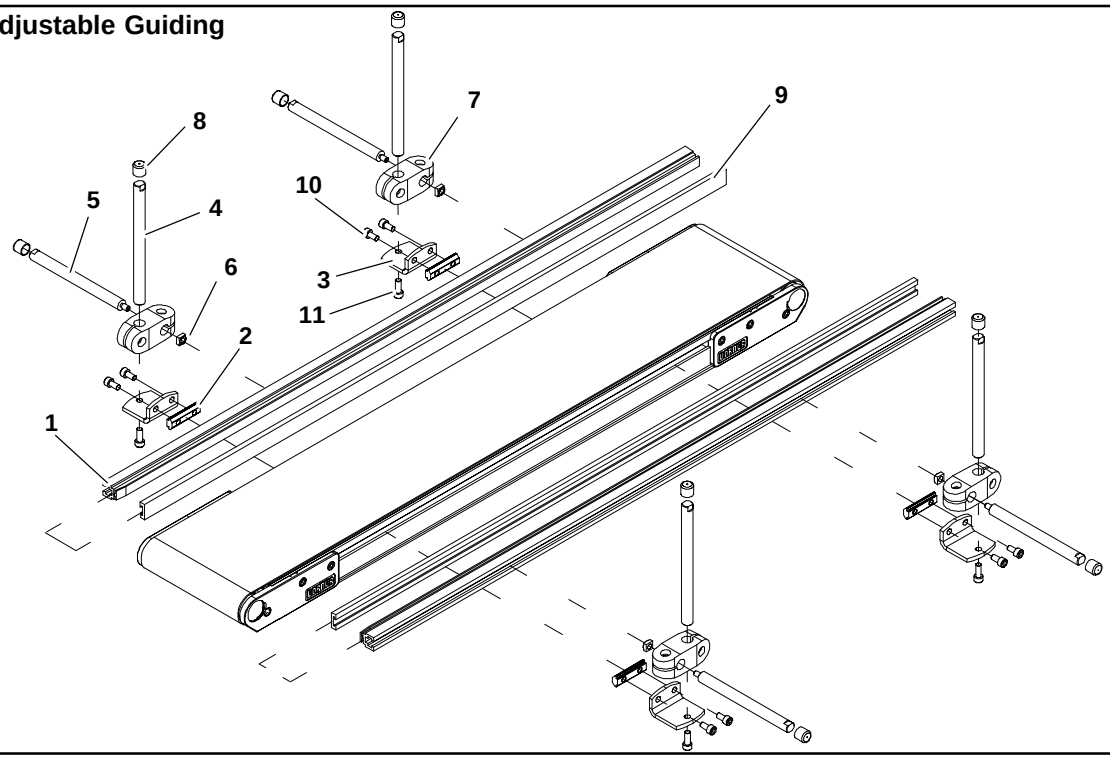

Item	Part Number	Description
1	202983	Aluminum Profile Guide 2’ (610mm)
	202984	Aluminum Profile Guide 3’ (914mm)
	202985	Aluminum Profile Guide 4’ (1219mm)
	202986	Aluminum Profile Guide 5’ (1524mm)
	202987	Aluminum Profile Guide 6’ (1829mm)
	202988	Aluminum Profile Guide 7’ (2134mm)
	202989	Aluminum Profile Guide 8’ (2438mm)
	202990	Aluminum Profile Guide 9’ (2743mm)
	202991	Aluminum Profile Guide 10’ (3048mm)
	202992	Aluminum Profile Guide 11’ (3353mm)
	202993	Aluminum Profile Guide 12’ (3658mm)
	202994	Aluminum Profile Guide 13’ (3962mm)

2	200830M	Drop–In Tee Bar
3	202004	Mounting Bracket
4	202027M	Guide Mounting Shaft Vertical
5	202028M	Guide Mounting Shaft Horizontal
6	674175MP	Square Nut
7	807–652	Cross Block
8	807–948	Vinyl Shaft Cap
9	614068P	Flat Extruded Guide (per foot)
10	920612M	Socket Head Screw M6 x 12mm
11	920616M	Socket Head Screw M6 x 16mm

Flared Side Guiding

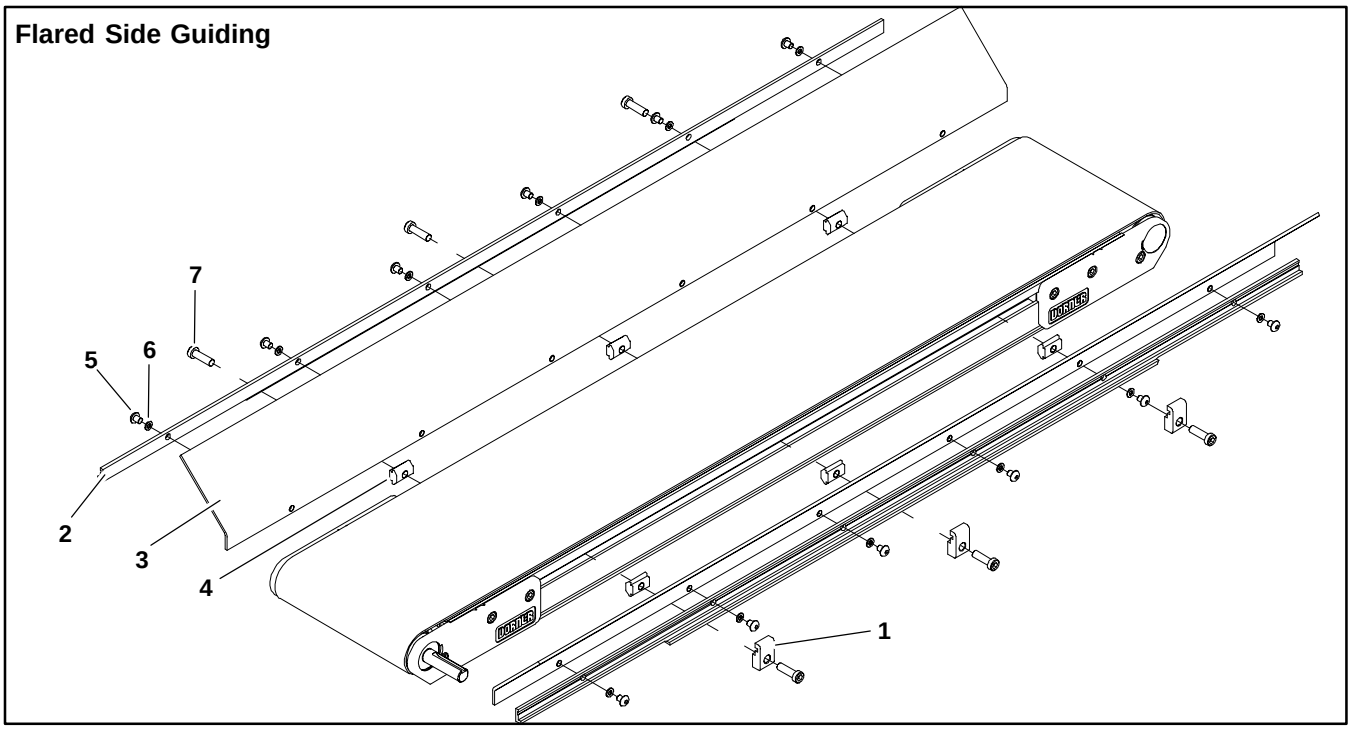

Item	Part Number	Description
1	200121	Guide Retaining Clip
2	202212	Side–Flare Mounting Guide 2’ (610mm)
	202213	Side–Flare Mounting Guide 3’ (914mm)
	202214	Side–Flare Mounting Guide 4’ (1219mm)
	202215	Side–Flare Mounting Guide 5’ (1524mm)
	202216	Side–Flare Mounting Guide 6’ (1829mm)

3	202522M	Flared Guide 45° 2’ (610mm)
	202523M	Flared Guide 45° 3’ (914mm)
	202523M	Flared Guide 45° 4’ (1219mm)
	202523M	Flared Guide 45° 5’ (1524mm)
	202523M	Flared Guide 45° 6’ (1829mm)
4	639971	Drop–In Tee Bar
5	910506M	Button Head Screw M5 x 6mm
6	911–512	Washer
7	920694M	Cap Low–Head Screw M6 x 20mm

Flat Belt Mounting Brackets

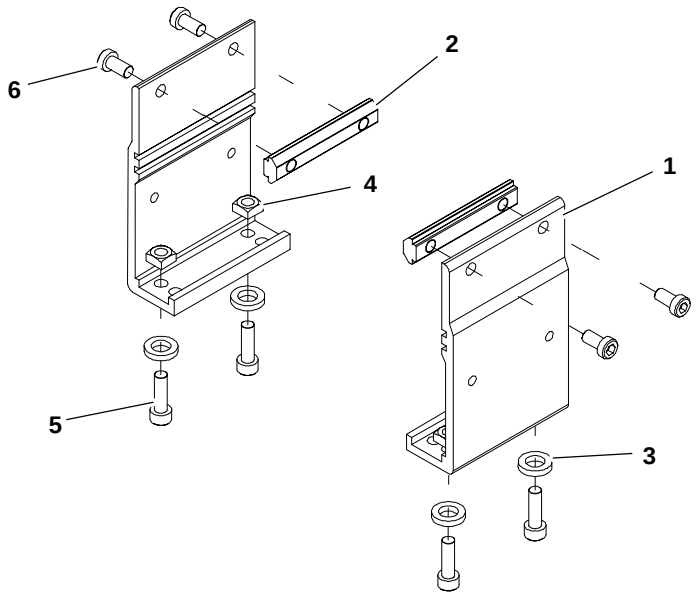

Item	Part Number	Description
1	240831	Stand Mount
2	300150M	Drop–In Tee Bar
3	605279P	Washer
4	807–920	Square Nut M6 5mm x 10mm
5	920620M	Socket Head Screw M6 x 20mm
6	920692M	Socket Head Screw M6 x 12mm

Flat Belt Mounting Brackets for 2' (610mm) Conveyors

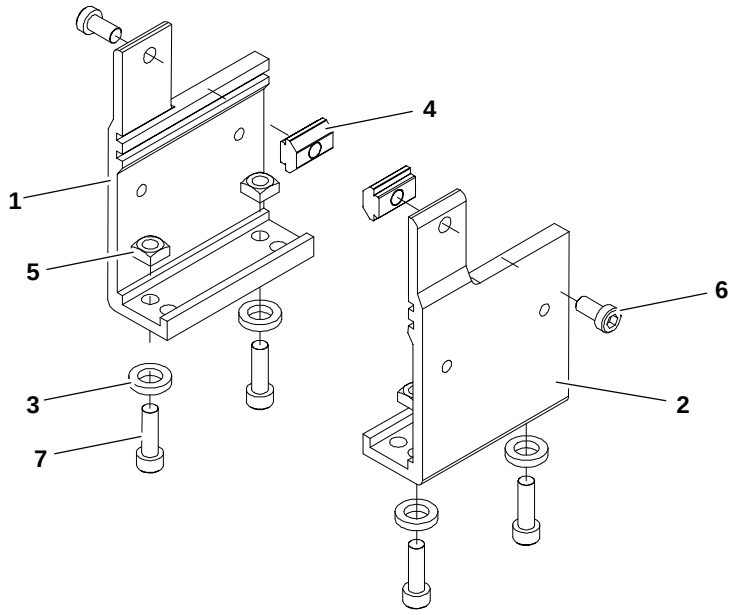

Item	Part Number	Description
1	240833	Stand Mount, LH 2' (610mm)
2	240834	Stand Mount, RH 2' (610mm)
3	605279P	Washer
4	639971M	Drop–In Tee Bar
5	807–920	Square Nut M6 5mm x 10mm
6	920620M	Socket Head Screw M6 x 20mm
7	920692M	Socket Head Screw M6 x 12mm

Connecting Assembly without Stand Mount

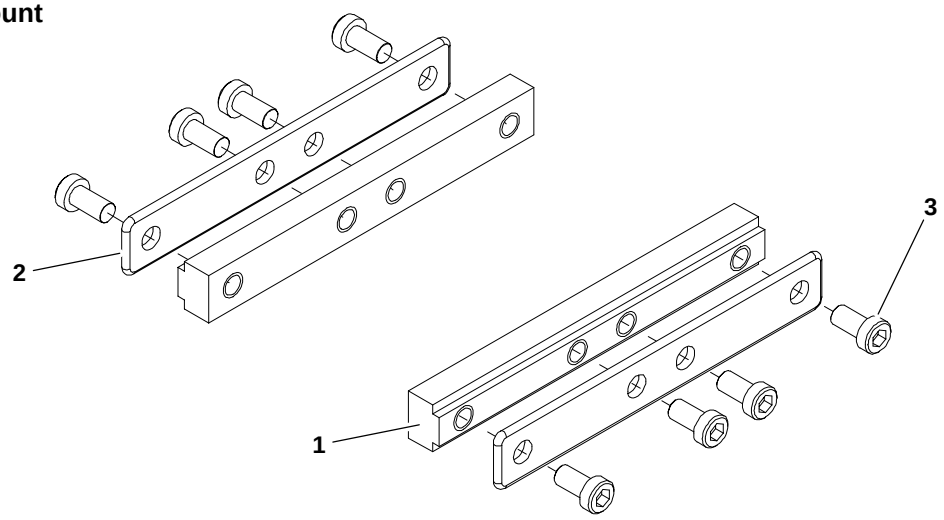

Item	Part Number	Description
1	240331	Frame Bar Connector
2	300153M	Intermediate Clamp Plate
3	920692M	Socket Head Screw M6 x 12mm

Flat Belt Connecting Assembly with Stand Mount

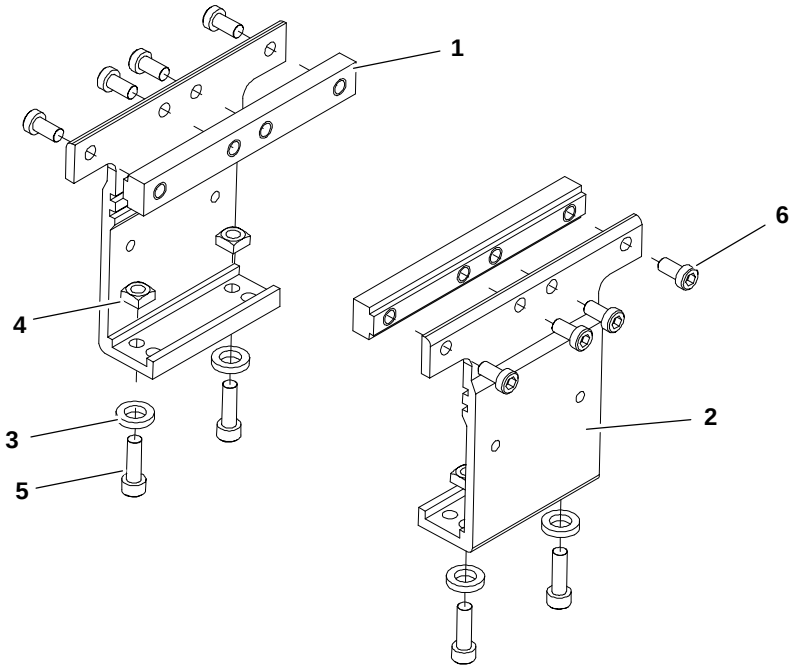

Item	Part Number	Description
1	240331	Frame Connector Bar
2	240837	Stand Mount Joint
3	605279P	Washer
4	807–920	Square Nut M6 5mm x 10mm
5	920620M	Socket Head Screw M6 x 20mm
6	920692M	Socket Head Screw M6 x 12mm

2” (51mm) to 6” (152mm)
Flat Belt Return Roller

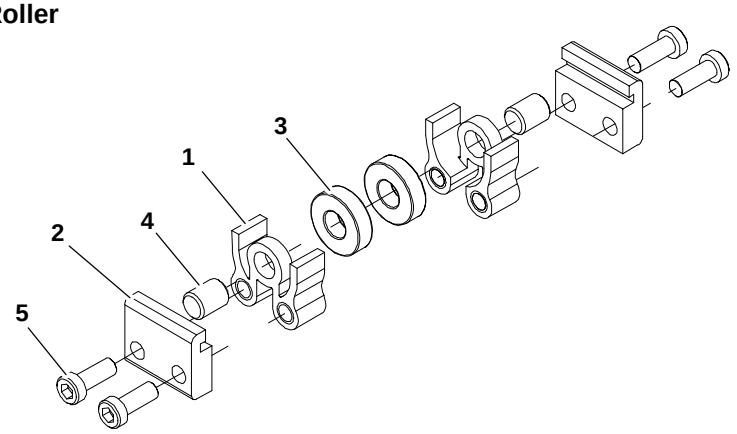

Item	Part Number	Description
1	240825	Short Return Roller Guard
2	240827	Return Roller Clip
3	802–123	Bearing
4	913–100	Dowel Pin
5	920693M	Socket Head Screw M6 x 16mm

8” (203mm) to 24” (610mm)
Flat Belt Return Roller

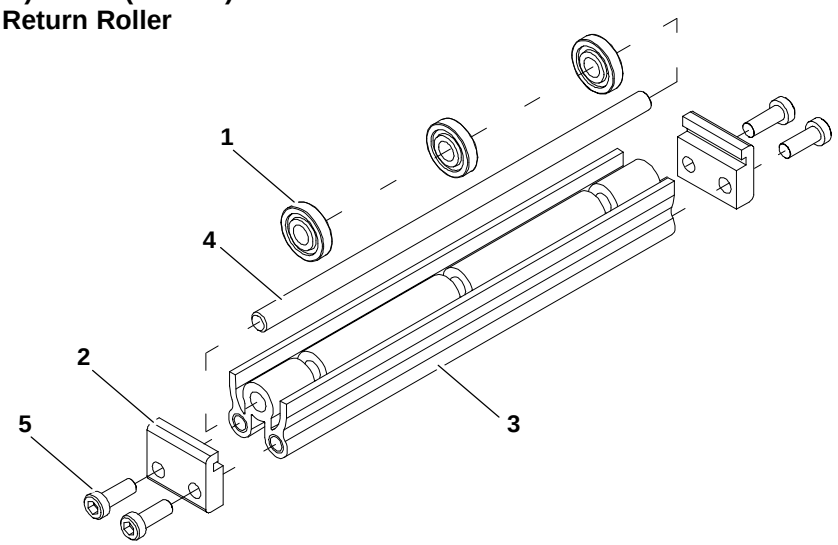

Item	Part Number	Description
1	240826	Return Roller
2	240827	Return Roller Clip
3	240908	Return Roller Guard 8” (203mm)
	240910	Return Roller Guard 10” (254mm)
	240912	Return Roller Guard 12” (305mm)
	240918	Return Roller Guard 18” (457mm)
	240921	Return Roller Guard 18” (533mm)
	240924	Return Roller Guard 24” (610mm)
4	241008	Return Roller Rod 8” (203mm)
	241010	Return Roller Rod 10” (254mm)
	241012	Return Roller Rod 12” (305mm)
	241018	Return Roller Rod 18” (457mm)
	241021	Return Roller Rod 21” (533mm)
	241024	Return Roller Rod 24” (610mm)
5	920693M	Socket Head Screw M6 x 16mm

Conveyor Belt Part Number Configuration

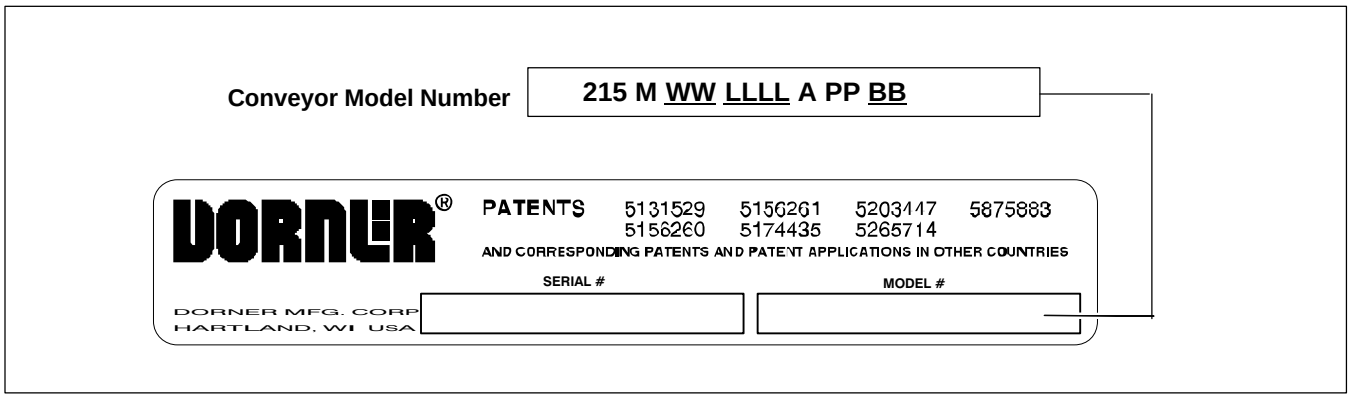

Figure 59

Refer to Dorner patent plate (Figure 59). From the model number, determine conveyor width ("WW"), length ("LLLL") and belt type ("BB"). Use data to configure belt part number as indicated below. *****Add "V" for V-guided belts.

25 - WW LLLL / BB V *

22- ____ (Fill In) ____ **/** ____ **V ***

Return Policy

No returns will be accepted without prior written factory authorization. When calling for authorization, please have the following information ready for the Dorner Factory representative or your local distributor:

1. Name and address of customer.
2. Item(s) being returned.
3. Reason for return.
4. Customer's original order number used when ordering the item(s).
5. Dorner or distributor invoice number.

A representative will discuss action to be taken on the Returned items and provide a Returned Goods Authorization Number to reference.

There will be a 15% restocking charge on all new items returned for credit where Dorner was not at fault. These will not be accepted after 60 days from original invoice date. The restocking charge covers inspection, cleaning, disassembly, and reissuing to inventory.

If a replacement is needed prior to evaluation of returned item, a purchase order must be issued. Credit (if any) is issued only after return and evaluation is complete.

Dorner has representatives throughout the world. Feel free to contact Dorner for the name of your local representative. Our technical sales and service staff will gladly help with your questions on Dorner products.

For a copy of Dorner's Limited Warranty, contact factory, distributor, service center or visit our website at www.dorner.com.

For replacement parts, contact an authorized Dorner Service Center or the factory.

Dorner Mfg. Corp. reserves the right to change or discontinue products without notice. All products and services are covered in accordance with our standard warranty. All rights reserved. ©Dorner Mfg. Corp. 2000

DORNER MFG. CORP.
975 Cottonwood Ave. PO Box 20
Hartland, WI 53029-0020 USA
USA
TEL 1-800-397-8664 (USA)
FAX 1-800-369-2440 (USA)
Outside the USA:
TEL 1-262-367-7600, FAX 1-262-367-5827

DORNER
Arnold-Sommerfeld-Ring 2
D-52499 Baesweiler
Germany
TEL (02401) 80 52 90
FAX (02401) 80 52 93

Internet: www.dorner.com