2200 Series Center & Mid Drive Conveyors

Installation, Maintenance & Parts Manual

DORNER MFG. CORP.
P.O. Box 20 • 975 Cottonwood Ave.
Hartland, WI 53029-0020 USA

INSIDE THE USA
TEL: 1-800-397-8664
FAX: 1-800-369-2440

OUTSIDE THE USA
TEL: 262-367-7600
FAX: 262-367-5827

For other service manuals visit our website at:
www.dorner.com/service_manuals.asp

851-453 Rev. M

Table of Contents

Introduction 2
Warnings – General Safety 3
Product Description 4
Specifications 5
Installation 7
Required Tools 7
Recommended Installation Sequence 7
Conveyors Up to 12 ft (3658 mm) 7
Conveyors Longer Than 12 ft (3658 mm) 7
Mounting Brackets 8
Return Rollers 9
8–24" (203–610 mm) Wide Flat Belt Conveyors 9
Preventive Maintenance and Adjustment 10
Required Tools 10
Standard Tools 10
Special Tools 10
Checklist 10
Lubrication 10
Conveyor Pulley Bearings 10
Drive Module Idler Pulley Bearings 10
Drive Module Drive Pulley Bearings 10
Return Rollers 10
Maintaining Conveyor Belt 10
Troubleshooting 10
Cleaning 10
Conveyor Belt Replacement 11
Conveyor Belt Replacement Sequence 11
Belt Removal for Conveyor Without Stands or Gearmotor Mounting Package 11
Belt Removal for Conveyor With Stands and Gearmotor Mounting Package 12
Gearmotor Mounting Package Removal 13
Drive Module Removal 14
Belt Removal from Drive Module 14
Conveyor Belt Installation 15
Conveyor Belt Tensioning 16
Conveyor Tension End Adjustment 17
Conveyors with 1.25" (32 mm) Diameter Pulleys 17
Conveyors with Nose Bar Idlers 17
Mid Drive Belt Replacement 18
Conveyor Belt Tracking 19
V-Guided Belts 19
Non V-Guided Belts 19
Pulley Removal 19
Conveyor End Pulley Removal 20
Drive Module Drive Pulley Removal 20
Drive Module Idler Pulley Removal 20
Conveyor Pulley Bearing Removal and Replacement 21
Removal 21
Replacement 21
Conveyor Pulley Installation 22
Drive Module Drive Pulley 22
Drive Module Idler Pulley 22
Nose Bar Bearing Replacement 22
Mid Drive Spindle Replacement 23
Service Parts 24
2" (51 mm) Wide Conveyor 24
3" (76 mm) to 6" (152 mm) Wide Conveyor 25
8" (203 mm) to 12" (305 mm) Wide Conveyor 26
18" (457 mm) to 24" (610 mm) Wide Conveyor 27
2200 Center Drive Module 28
Nosebar End Assembly 30
Mid Drive Module 31
–04 3" (76 mm) Aluminum Side 32
–05 1.5" (38 mm) Aluminum Side 33
–07 Low to Side Wiper 34
–09 Low to High Side 35
–10.5" (13 mm) Extruded Plastic 36
–13 Adjustable Guiding 37
–14 Tool-Less Adjustable Guiding 38
Flared Side Guiding 39
Flat Belt Stand Mount Assembly 40
Flat Belt Stand Mount Assembly for 2' (610 mm) Conveyors 40
Flat Belt Stand Mounts Assembled to the Tail 41
Connecting Assembly without Stand Mount 41
Flat Belt Connecting Assembly with Stand Mount 42
2" (51 mm) to 6" (152 mm) Flat Belt Return Roller 42
8" (203 mm) to 24" (610 mm) Flat Belt Return Roller 43
Conveyor Belt Part Number Configuration 43
Return Policy 44

Introduction

IMPORTANT

Some illustrations may show guards removed. Do NOT operate equipment without guards.

Upon receipt of shipment:

- Compare shipment with packing slip. Contact factory regarding discrepancies.
- Inspect packages for shipping damage. Contact carrier regarding damage.
- Accessories may be shipped loose. See accessory instructions for installation.

Dorner's Limited Warranty applies.

Dorner has convenient, pre–configured kits of Key Service Parts for all conveyor products. These time saving kits are easy to order, designed for fast installation, and guarantee you will have what you need when you need it. Key Parts and Kits are marked in the Service Parts section of this manual with the Performance Parts Kits logo

Dorner 2200 series conveyors are covered by Patent Numbers 5,174,435, 6,298,981, 6,422,382 and corresponding patents and patent applications in other countries.

Dorner reserves the right to make changes at any time without notice or obligation.

⚠ WARNING

The safety alert symbol, black triangle with white exclamation, is used to alert you to potential personal injury hazards.

⚠ DANGER

Climbing, sitting, walking or riding on conveyor will cause severe injury.

KEEP OFF CONVEYORS.

⚠ DANGER

DO NOT OPERATE CONVEYORS IN AN EXPLOSIVE ENVIRONMENT.

⚠ WARNING

Exposed moving parts can cause severe injury.

LOCK OUT POWER before removing guards or performing maintenance.

⚠ WARNING

Gearmotors may be HOT.

DO NOT TOUCH Gearmotors.

⚠ WARNING

Dorner cannot control the physical installation and application of conveyors. Taking protective measures is the responsibility of the user.

When conveyors are used in conjunction with other equipment or as part of a multiple conveyor system, CHECK FOR POTENTIAL PINCH POINTS and other mechanical hazards before system start-up.

⚠ WARNING

Loosening stand height or angle adjustment screws may cause conveyor sections to drop down, causing severe injury.

SUPPORT CONVEYOR SECTIONS PRIOR TO LOOSENING STAND HEIGHT OR ANGLE ADJUSTMENT SCREWS.

Product Description

Refer to **Figure 1** for typical conveyor components.

1	Conveyor
2	Drive Module
3	Guiding & Accessories
4	Gearmotor Mounting Package
5	Gearmotor
6	Mounting Brackets
7	Support Stand
8	Variable Speed Controller
9	Fixed End
10	Tension End

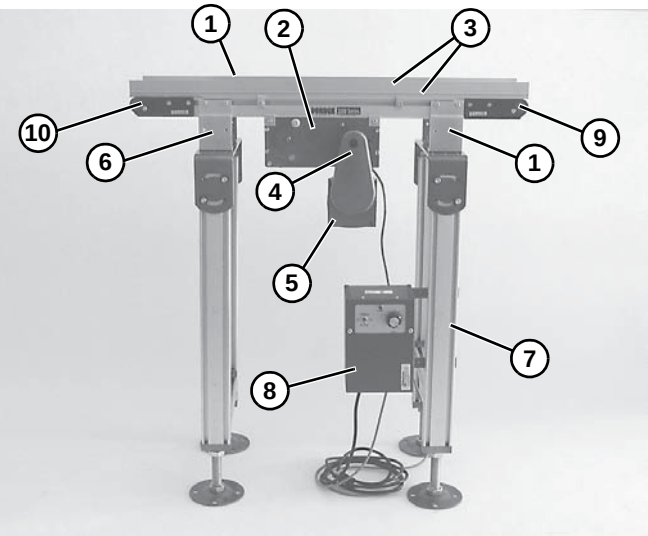

Figure 1

Models:

2200 Series Center Drive Conveyor

252 M WW–LLLL G D I D PA PD BB

- BB – Belt Type
- PD – Profile (D side)
- PA – Profile (A side)
- D – Motor Shaft Position
- I – Idler Tail Type
- D – Drive Tail Type
- G – Tracking / Mounting Brackets
- LLLL – Conveyor Length
- WW – Conveyor Width
- M – Document Language
- 252 – Center Drive

2200 Series Mid Drive Conveyor

262 M WW–LLLL G D I D PA PD BB

- BB – Belt Type
- PD – Profile (D side)
- PA – Profile (A side)
- D – Motor Shaft Position
- I – Idler Tail Type
- D – Drive Tail Type
- G – Tracking / Mounting Brackets
- LLLL – Conveyor Length
- WW – Conveyor Width
- M – Document Language
- 262 – Mid Drive

* See Ordering and Specifications Catalog for details.

Conveyor Supports:

Maximum Distances:

1 = 18¨ (457 mm)

2 = 6 ft (1829 mm)**

** For conveyors longer than 13 ft (3962 mm), install support at joint.

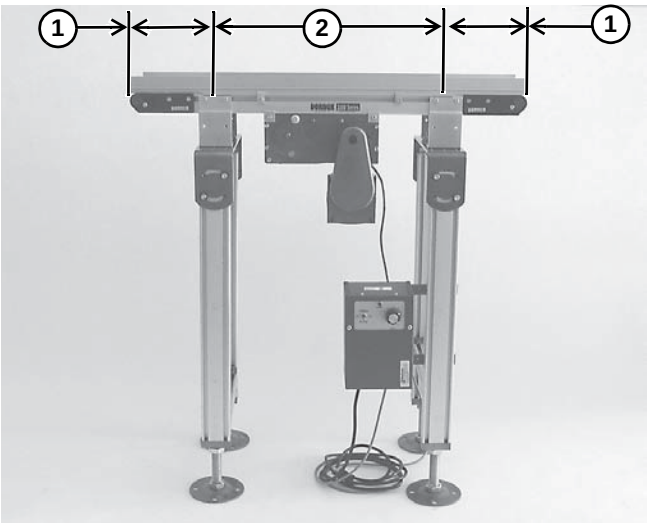

Figure 2

Specifications

Specifications:

Conveyor Width Reference (WW)	02	03	04	05	06	08	10	12	18	21	24
Conveyor Belt Width	1.75¨ (44 mm)	2.75¨ (70 mm)	3.75¨ (95 mm)	5¨ (127 mm)	6¨ (152 mm)	8¨ (203 mm)	10¨ (254 mm)	12¨ (305 mm)	18¨ (457 mm)	21¨ (533 mm)	24¨ (610 mm)
Center Drive Maximum Conveyor Load* (See NOTE Below)	40 lb (18 kg)	50 lb (23 kg)	60 lb (27 kg)	75 lb (34 kg)	90 lb (41 kg)	105 lb (47 kg)	120 lb (54 kg)	120 lb (54 kg)	120 lb (54 kg)	120 lb (54 kg)	120 lb (54 kg)
Mid Drive Maximum Conveyor Load* (See NOTE Below)	30 lb (14kg)	35 lb (16kg)	42 lb (19kg)	50 lb (23kg)	60 lb (27kg)	70 lb (32kg)	80 lb (36kg)	80 lb (36kg)	80 lb (36kg)	80 lb (36kg)	80 lb (36kg)
Conveyor Start-up Torque*	9 in-lb (1.0 Nm)	10 in-lb (1.1 Nm)	11 in-lb (1.2 Nm)	12 in-lb (1.4 Nm)	15 in-lb (1.7 Nm)	20 in-lb (2.3 Nm)	23 in-lb (2.6 Nm)	25 in-lb (3.4 Nm)	30 in-lb (3.4 Nm)	35 in-lb (4.0 Nm)	35 in-lb (4.0 Nm)
Belt Travel	4.2¨ (107 mm) per revolution of pulley										
Maximum Belt Speed*	235 feet/minute (72 meters/minute)										
Belt Take-up	1¨ (25 mm) of stroke = 2¨ (51 mm) of belt take-up (Center Drive Conveyors Only)										

Conveyor Length Reference (LL)	02	03	04	05	06	07	08	09	10	11	12	13	24	14	15	16	17	18	19	20	21	22	23	24
Conveyor Length	2-ft (610 mm)	3-ft (914 mm)	4-ft (1219 mm)	5-ft (1524 mm)	6-ft (1829 mm)	7-ft (2134 mm)	8-ft (2438 mm)	9-ft (2743 mm)	10-ft (3048 mm)	11-ft (3353 mm)	12-ft (3658 mm)	13-ft (3962 mm)	24-ft (7315 mm)	14-ft (4267 mm)	15-ft (4572 mm)	16-ft (4877 mm)	17-ft (5182 mm)	18-ft (5486 mm)	19-ft (5791 mm)	20-ft (6096 mm)	21-ft (6401 mm)	22-ft (6706 mm)	23-ft (7010 mm)	24-ft (7315 mm)

* See Ordering and Specifications Catalog for details.

NOTE

Maximum conveyor loads based on:

- *Non-accumulating product*
- *Product moving towards gearmotor*
- *Conveyor being mounted horizontal*

NOTE

Conveyor MUST be mounted straight, flat and level within confines of conveyor. Use a level ***(Figure 3, item 1)*** *for setup.*

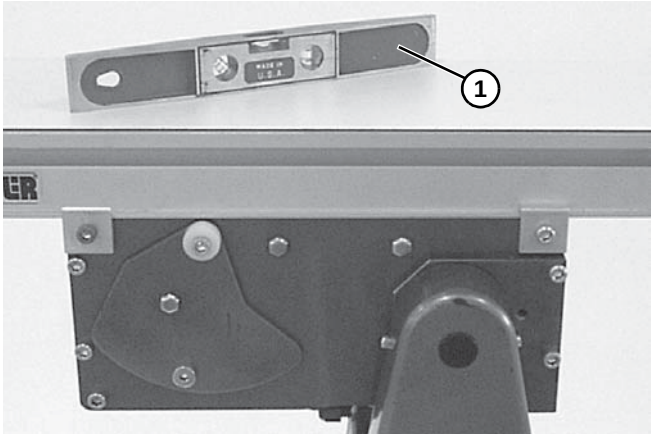

Figure 3

Installation Component List
Conveyor frame [(two sections – for 12 ft (3658 mm) and longer conveyors]
Conveyor brackets (4x)
Return rollers (for longer conveyors)

Required Tools

- Hex key wrenches:
  4 mm, 5 mm
- Level
- Torque wrench

Recommended Installation Sequence

- Install stands (see accessory instructions)
- Assemble conveyor (if required)
- Attach mounting brackets to conveyor
- Attach conveyor to stands
- Install return rollers on conveyor (optional)
- Mount gearmotor mounting package (see accessory instructions)
- Attach guides/accessories (see “Service Parts” section, page 24)

Conveyors Up to 12 ft (3658 mm)

No assembly is required. Install mounting brackets and return rollers. Refer to “Mounting Brackets”, page 8 and “Return Rollers”, page 9.

Conveyors Longer Than 12 ft (3658 mm)

1. Locate and arrange conveyor sections **(Figure 4, item 1)** by section labels.

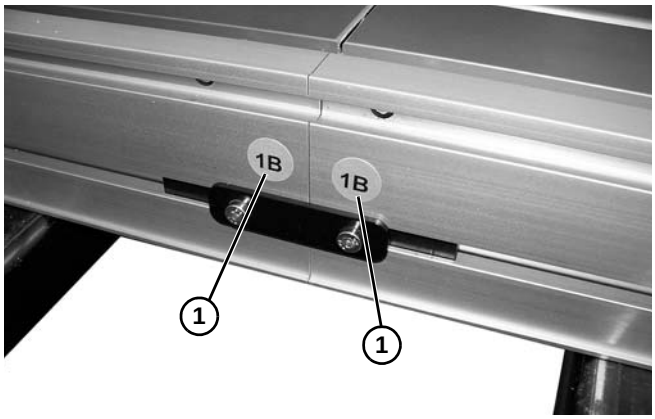

Figure 4

2. On tension end of the conveyor, identified with a label **(Figure 5, item 1)**, push in head plate assembly **(Figure 5, item 2)**: On both sides of conveyor, loosen and move cam tracking assemblies **(Figure 5, item 3)** (if equipped) away from head plates, then loosen fastening screws **(Figure 5, item 4)** and push head plate assembly inward.

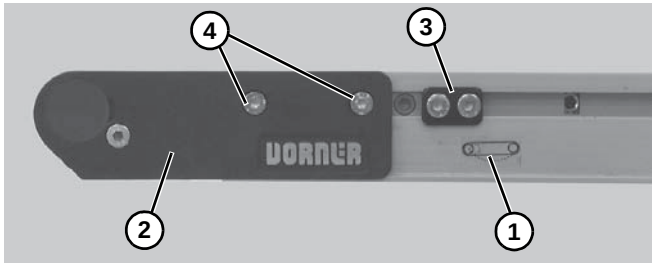

Figure 5

3. Roll out conveyor belt and place conveyor frame sections **(Figure 6, item 1)** into belt loop.

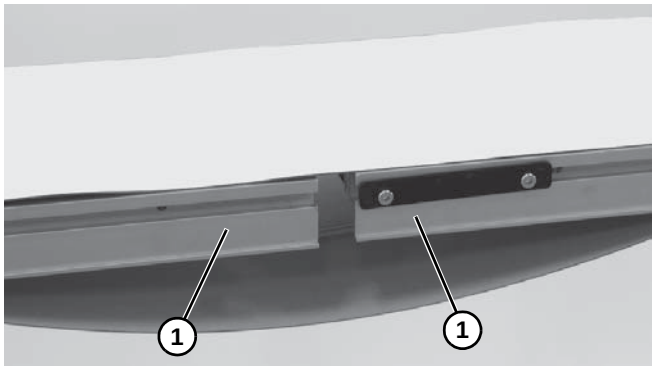

Figure 6

4. Join conveyor sections and install connector brackets **(Figure 7, item 1)** or connector/mount brackets **(Figure 7, item 2)** and screws **(Figure 7, item 3)** on both sides as indicated. Tighten screws to 60 in-lb (7 Nm).

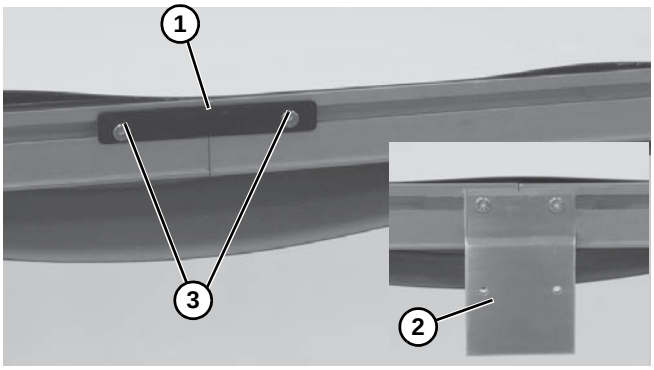

Figure 7

5. With a 5 mm hex-key wrench, rotate pinion gear **(Figure 8, item 1)** to tension the conveyor belt. Tighten fastening screws **(Figure 8, item 2)** on both sides of conveyor to 60 in-lb (7 Nm). For proper tensioning, refer to "Conveyor Tension End Adjustment" on page 17.

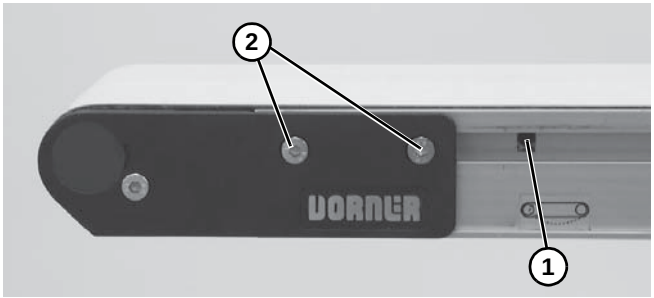

Figure 8

6. Install mounting brackets and return rollers. Refer to "Mounting Brackets" on page 8 and "Return Rollers" on page 9.
7. If equipped with cam tracking assemblies **(Figure 5, item 3)**, adjust belt tracking. Refer to "Conveyor Belt Tracking" on page 19.

Mounting Brackets

1. Locate brackets. Exploded views shown in **Figure 9**.

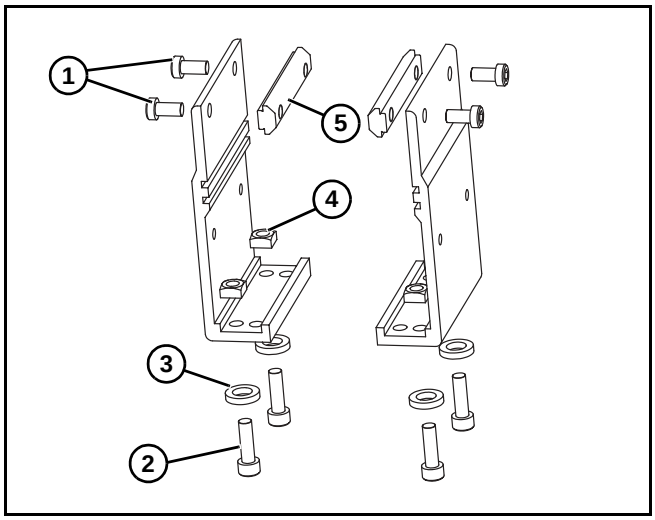

Figure 9

2. Remove screws **(Figure 9, item 1 & 2)**, washers **(Figure 9, item 3)**, nuts **(Figure 9, item 4)** and T-bars **(Figure 9, item 5)** from brackets.
3. Insert T-bars **(Figure 9, item 5)** into conveyor side slots **(Figure 10, item 1)**. Fasten brackets **(Figure 10, item 2)** to conveyor with mounting screws **(Figure 10, item 3)**.

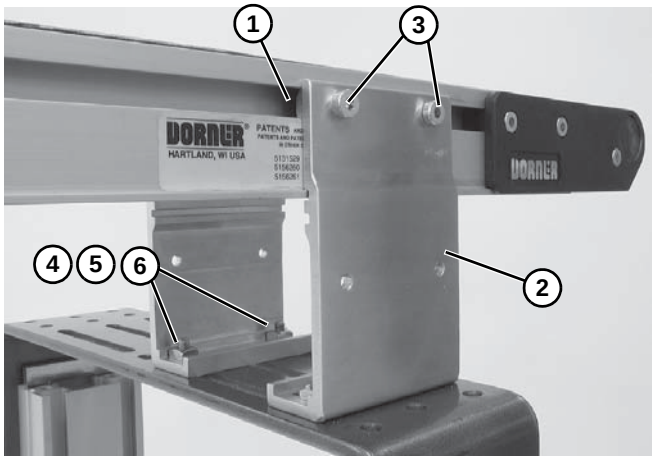

Figure 10

4. Fasten brackets to support stand with mounting screws **(Figure 10, item 4)**, washers **(Figure 10, item 5)** and nuts **(Figure 10, item 6)**.
5. Tighten screws **(Figure 10, item 3 & 4)** to 60 in-lb (7 Nm).

Return Rollers

2–6¨ (51–152 mm) Wide Flat Belt Conveyors

1. Locate return rollers. Exploded views shown in **Figure 11**.

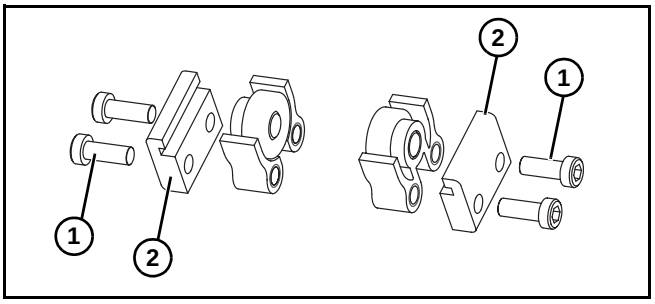

Figure 11

2. Remove screws **(Figure 11, item 1)** and clips **(Figure 11, item 1)** from roller assembly.
3. Install roller assemblies **(Figure 12, item 1)** as shown. Tighten screws **(Figure 12, item 2)** to 60 in-lb (7 Nm).

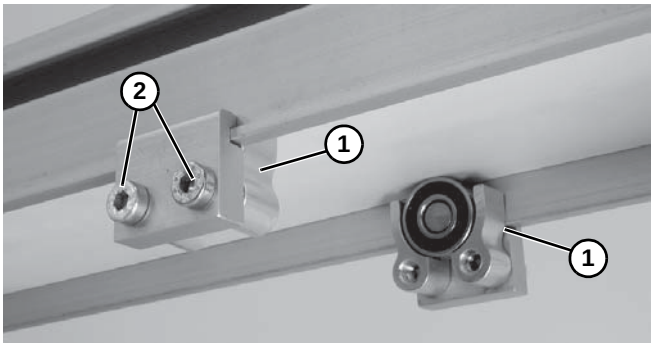

Figure 12

8–24¨ (203–610 mm) Wide Flat Belt Conveyors

1. Locate return rollers. Exploded view shown in **Figure 13**.

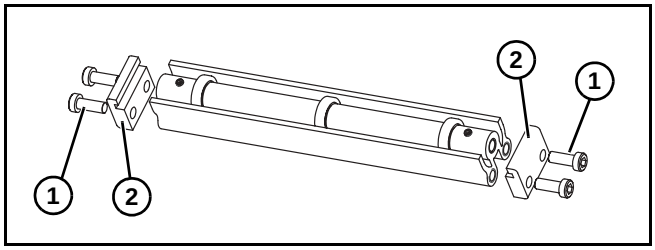

Figure 13

2. Remove screws **(Figure 13, item 1)** and clips **(Figure 13, item 2)** from roller assembly.
3. Install roller assembly as shown **(Figure 14, item 1)**. Tighten screws **(Figure 14, item 2)** to 60 in-lb (7 Nm).

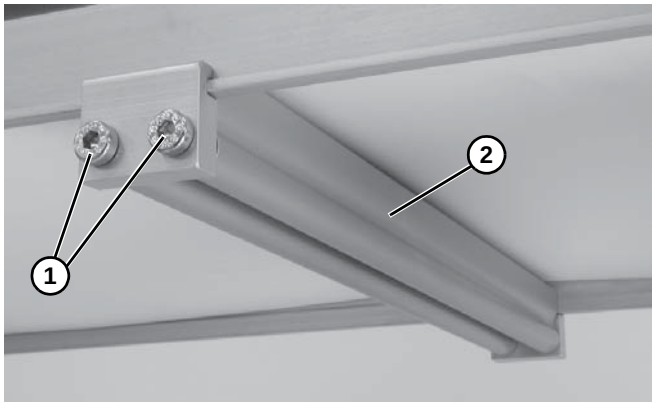

Figure 14

Preventive Maintenance and Adjustment

Required Tools

Standard Tools

- Hex key wrenches:
  - 2 mm
  - 2.5 mm
  - 3 mm
  - 4 mm
  - 5 mm
  - 6 mm
- Small flat blade screwdriver
- Adjustable wrench
- Arbor press

Special Tools

- 807–1716 Bearing Puller Tool (or equivalent)
- 450293 Bearing Installation Tool (Bearing Pusher)
- 456063 Bearing Removal Tool

Checklist

- Keep service parts on hand. See “Service Parts” for recommendations.
- Keep supply of belt cleaner (part number 625619).
- Clean entire conveyor and knurled pulley while disassembled.
- Replace worn or damaged parts.

Lubrication

⚠ WARNING

Exposed moving parts can cause severe injury.

LOCK OUT POWER before removing guards or performing maintenance.

Conveyor Pulley Bearings

No lubrication is required. Replace pulley if worn.

Drive Module Idler Pulley Bearings

No lubrication is required. Replace pulley if worn.

Drive Module Drive Pulley Bearings

No lubrication is required. Replace bearings if worn.

Return Rollers

No lubrication is required. Replace bearings if worn.

Maintaining Conveyor Belt

Troubleshooting

Inspect conveyor belt for:

- Surface cuts or wear
- Stalling or slipping

Surface cuts and wear indicate:

- Sharp or heavy parts impacting belt
- Jammed parts
- Improperly installed bottom wiper
- Accumulated dirt in wiper
- Foreign material inside the conveyor
- Improperly positioned accessories
- Bolt-on guiding is pinching belt

Stalling or slipping indicates:

- Excessive load on belt
- Conveyor belt or drive timing belt are not properly tensioned
- Worn knurl or impacted dirt on drive pulley
- Intermittent jamming or drive train problems

Cleaning

IMPORTANT

Do not use belt cleaners that contain alcohol, acetone, Methyl Ethyl Ketone (MEK) or other harsh chemicals.

Use Dorner Belt Cleaner (part number 625619). Mild soap and water may also be used. Do not soak the belt.

For /05 woven polyester and /06 black anti-static belts, use a bristled brush to improve cleaning.

Conveyor Belt Replacement

⚠ WARNING

Exposed moving parts can cause severe injury.

LOCK OUT POWER before removing guards or performing maintenance.

Conveyor Belt Replacement Sequence

NOTE

See Table of Contents for beginning page numbers of following procedures.

- Remove old conveyor belt:

Conveyor without Stands or Gearmotor Mounting Package

Conveyor with Stands and Gearmotor Mounting Package

- Drive Module Removal
- Conveyor Belt Removal from Drive Module
- Install New Conveyor Belt
- Tension Conveyor Belt

Belt Removal for Conveyor Without Stands or Gearmotor Mounting Package

1. If equipped, remove bottom wipers **(Figure 15, item 1)**: Remove fastening screws **(Figure 15, item 2)** then remove wiper.

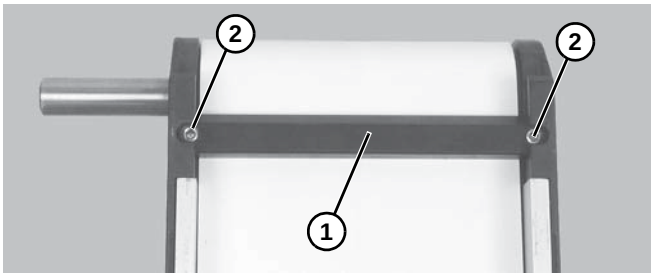

Figure 15

2. If equipped, remove return rollers and guiding and accessories from one side of conveyor.
3. Loosen corner screws **(Figure 16, item 1)**, on each side of the drive module **(Figure 16, item 2)**.

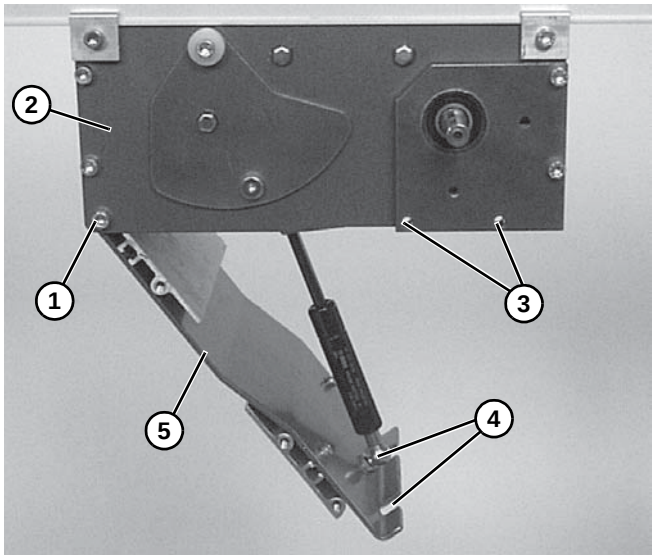

Figure 16

4. Remove tension door screws **(Figure 16, item 3)** on each side of the drive module.
5. Using finger grip holes **(Figure 16, item 4)**, open the tension door **(Figure 16, item 5)** to release conveyor belt tension.
6. On tension end of the conveyor, identified with a label **(Figure 17, item 1)**, push in head plate assembly **(Figure 17, item 2)**: On both sides of conveyor, loosen and move cam tracking assemblies **(Figure 17, item 3)** (if equipped) away from head plates, then loosen fastening screws **(Figure 17, item 4)** and push head plate assembly inward.

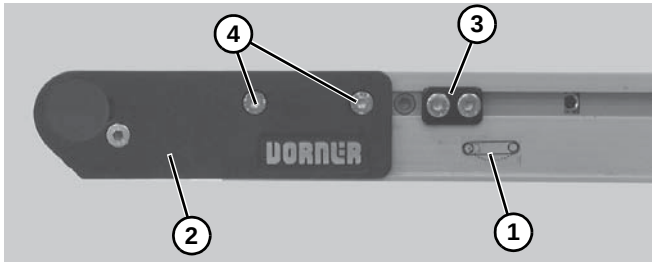

Figure 17

7. Remove conveyor belt from conveyor ends. See NOTE.

NOTE

On conveyors 4-ft (1219 mm) and shorter by 8¨ (203 mm) and wider, it is be necessary to remove the drive module at the same time the conveyor belt is removed. See "Drive Module Removal" on page 14.

8. Proceed to "Drive Module Removal" on page 14 and "Belt Removal from Drive Module" on page 14.

Belt Removal for Conveyor With Stands and Gearmotor Mounting Package

1. If equipped, remove bottom wipers **(Figure 18, item 1)**: Remove fastening screws **(Figure 18, item 2)** then remove wiper.

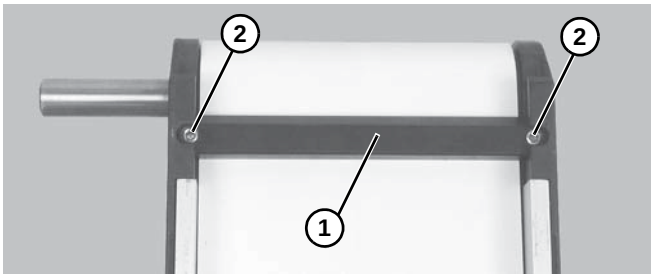

Figure 18

2. If equipped, remove return rollers and guiding and accessories from one side of conveyor.
3. Remove Gearmotor Mounting Package. See "Gearmotor Mounting Package Removal" on page 13.
4. Loosen corner screws **(Figure 19, item 1)**, on each side of the drive module **(Figure 19, item 2)**.

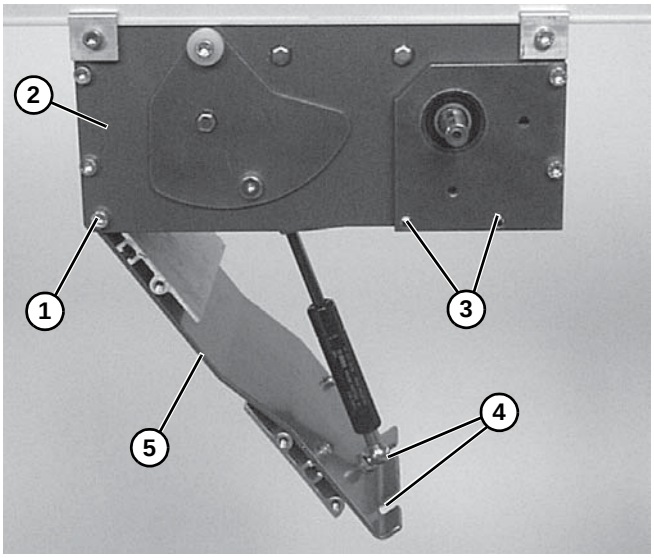

Figure 19

5. Remove tension door screws **(Figure 19, item 3)** on each side of the drive module.

NOTE
*With vertically mounted gearmotors, tension door screws **(Figure 19, item** 3) are removed from one side when the gearmotor mounting package is removed.*

6. Using finger grip holes **(Figure 19, item 4)**, open the tension door **(Figure 19, item 5)** to release conveyor belt tension.
7. On tension end of the conveyor, identified with a label **(Figure 20, item 1)**, push in head plate assembly **(Figure 20, item 2)**: On both sides of conveyor, loosen and move cam tracking assemblies **(Figure 20, item 3)** (if equipped) away from head plates, then loosen fastening screws **(Figure 20, item 4)** and push head plate assembly inward.

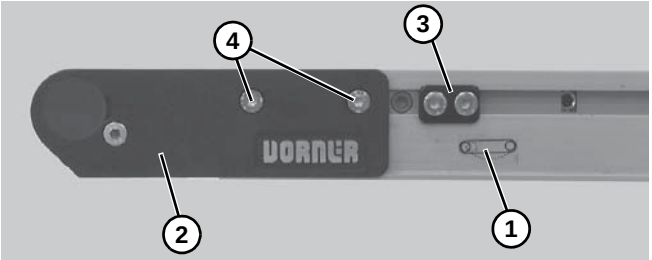

Figure 20

8. Place temporary support stands **(Figure 21, item 1)** at both ends of the conveyor.

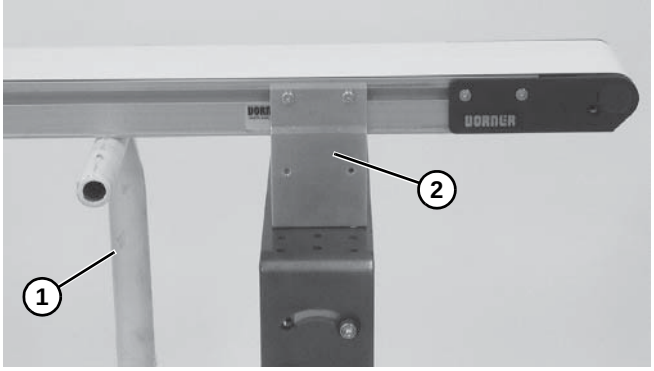

Figure 21

9. Remove mounting brackets **(Figure 21, item 2)** from one side of conveyor. (Reverse steps 3 & 4 of "Mounting Brackets" on page 8.)
10. Remove conveyor belt from conveyor ends. See NOTE.

NOTE
On conveyors 4-ft (1219 mm) and shorter by 8¨ (203 mm) and wider, it is be necessary to remove the drive module at the same time the conveyor belt is removed. See "Drive Module Removal" on page 14.

11. Proceed to "Drive Module Removal" on page 14 and "Belt Removal from Drive Module" on page 14.

Gearmotor Mounting Package Removal

1. Remove cover screws **(Figure 22, item 1)** and remove cover **(Figure 22, item 2)**.

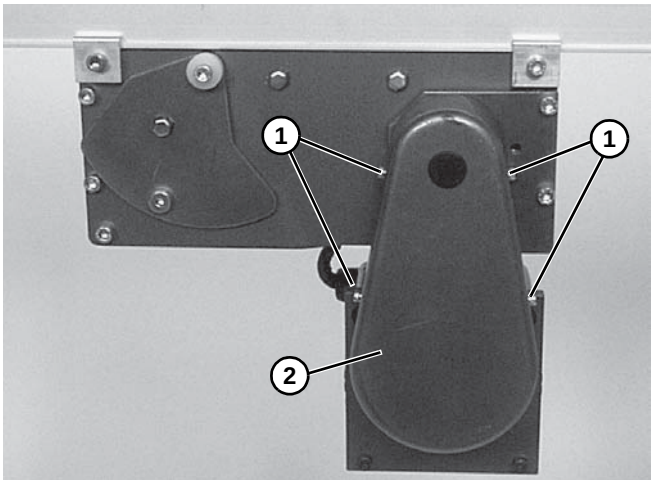

Figure 22

NOTE
Figure 22 & ***Figure 23*** *show vertically mounted gearmotor. Horizontally mounted gearmotor is similar.*

2. Loosen belt tensioner **(Figure 23, item 1)** then remove timing belt **(Figure 23, item 2)**.

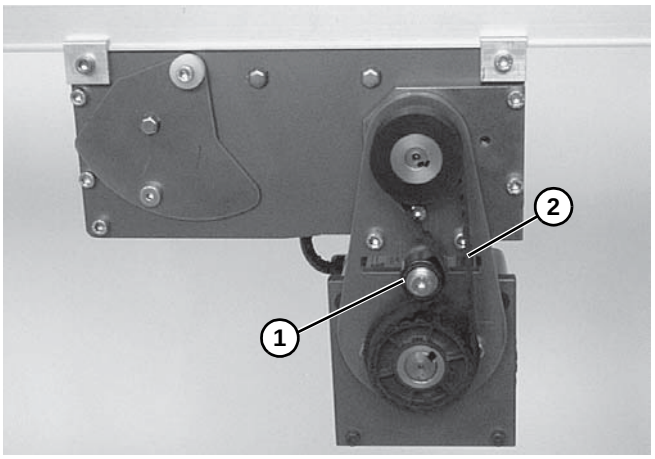

Figure 23

NOTE
If the timing belt does not slide over the pulley flange, loosen the driven pulley set screws ***(Figure 24, item 1)*** *and remove the pulley* ***(Figure 24, item 2)*** *with the belt* ***(Figure 24, item 3)****.*

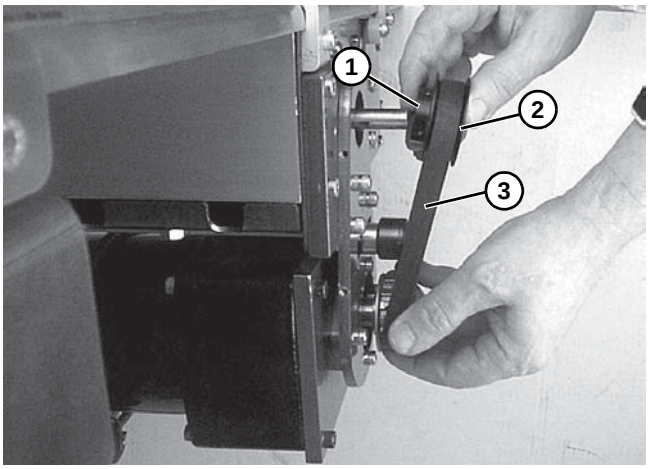

Figure 24

3. Remove three mounting screws **(Figure 25, item 1)** and remove gearmotor.

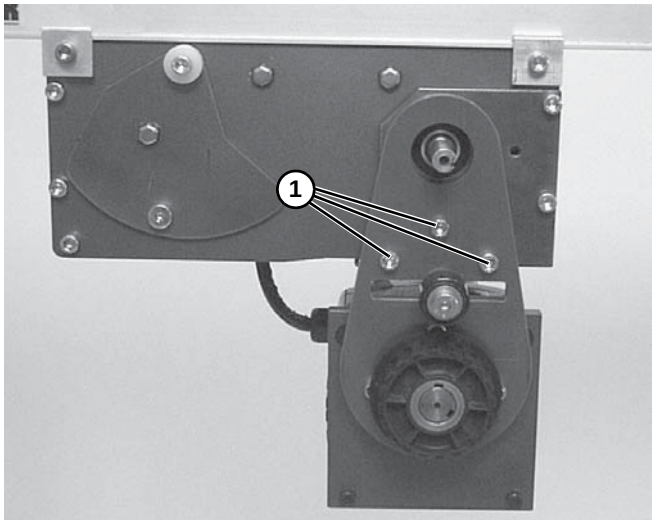

Figure 25

Drive Module Removal

⚠ WARNING

Removing drive module without support under the module may lead to personel injury.

PROVIDE SUPPORT UNDERNEATH THE DRIVE MODULE BEFORE REMOVING THE MODULE.

NOTE

If desired, mark position of drive module on conveyor before removal.

1. Place temporary support **(Figure 26, item 1)** underneath the drive module.

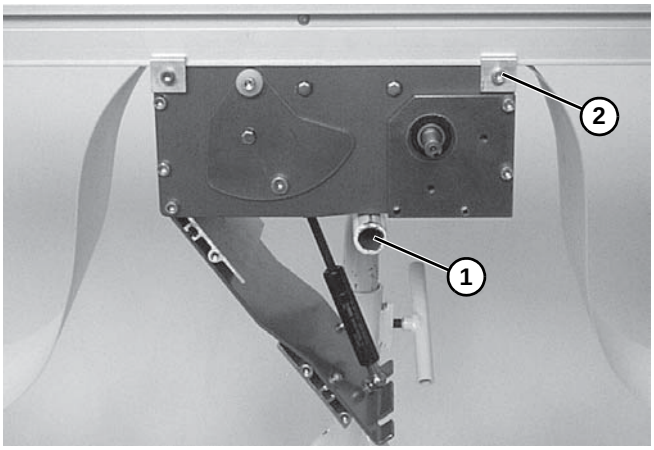

Figure 26

2. Loosen clamp screws **(Figure 26, item 2)** on each corner of the module. Remove the module.

Belt Removal from Drive Module

1. Remove drive plate screws **(Figure 27, item 1)**. Remove the tension drive plate **(Figure 27, item 2)**.

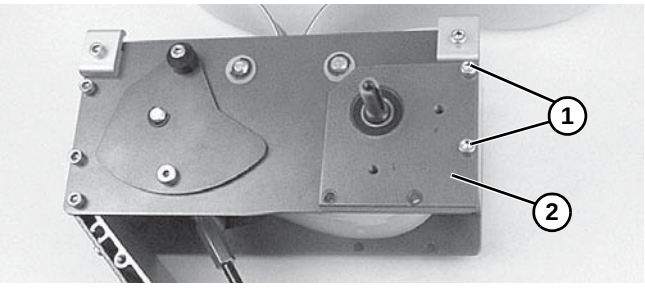

Figure 27

2. Remove drive pulley **(Figure 28, item 1)**.

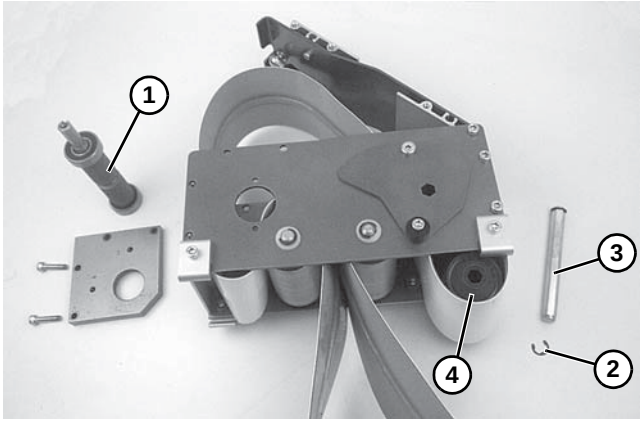

Figure 28

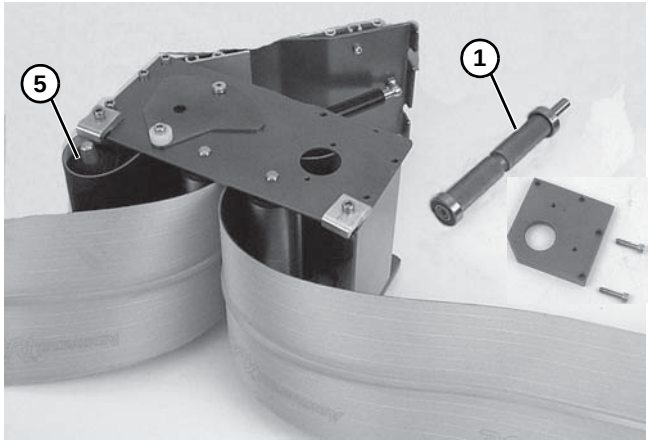

Figure 29

3. Remove grooved idler pulley:

- For 2” (44 mm), 3” (70 mm) or 4” (95 mm) wide conveyor, detach E-ring clip **(Figure 28, item 2)**. Remove pulley shaft **(Figure 28, item 3)** and remove pulley **(Figure 28, item 4)**.
- For 5” (127 mm) or wider conveyor, depress both sides of spring-loaded shaft and remove pulley **(Figure 29, item 5)**.

4. Remove the conveyor belt.

Conveyor Belt Installation

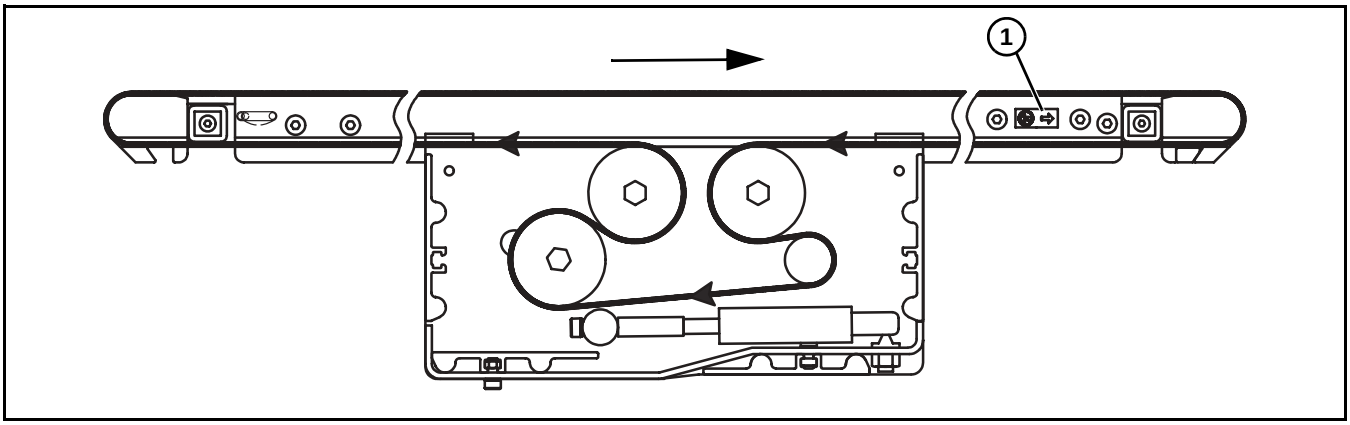

Figure 30

IMPORTANT

*On a center drive conveyors, belt travel direction is identified by an arrow decal on the side of the conveyor **(Figure 31, item 1)** & **(Figure 30, item 1)**.*

Figure 31

NOTE

It is necessary to replace the drive module at the same time the conveyor belt is replaced on conveyors 4-foot (1219 mm) and shorter by 8¨ (203 mm) and wider.

1. Orient the conveyor belt so that the splice leading fingers **(Figure 32, item 1)** point in the direction of belt travel, indicated by the label **(Figure 31, item 1)**.

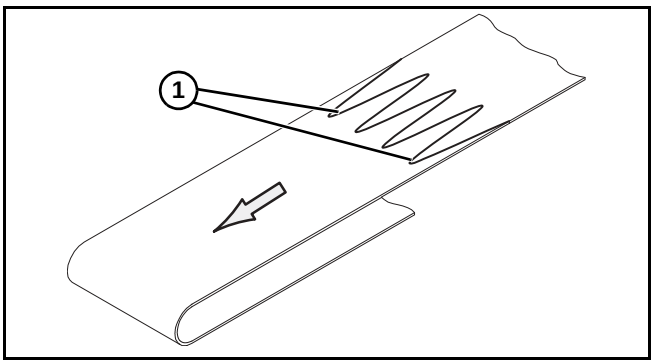

Figure 32

2. Place loop of belt **(Figure 33, item 1)** into the drive module between top idler pulleys **(Figure 33, item 2)**.

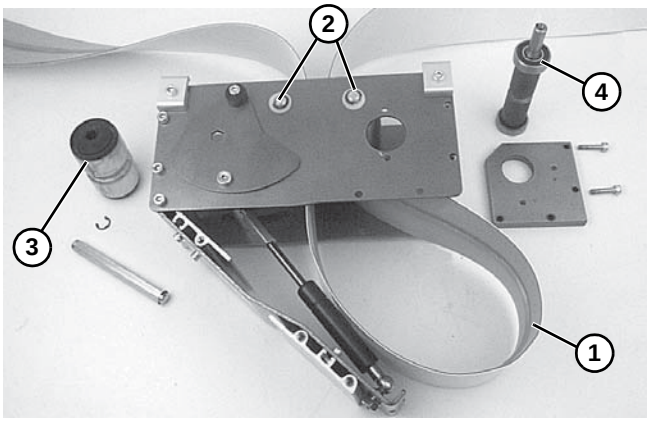

Figure 33

3. Place grooved idler pulley **(Figure 33, item 3)** into the belt loop and install it in the drive module. Refer to "Belt Removal from Drive Module" on page 14 and reverse step 3.
4. Place drive pulley **(Figure 33, item 4)** into the belt loop and install it in the drive module. Refer to "Belt Removal from Drive Module" on page 14 and reverse steps 1 and 2. Tighten screws **(Figure 27, item 1)** to 80 in-lb (9 Nm).
5. Install the drive module onto the conveyor and attach clamps **(Figure 26, item 2)** in each corner. Tighten screws to 80 in-lb (9 Nm).

6. Route and install the belt over both ends of the conveyor.
7. On conveyors with stands, re-install conveyor mounting brackets. Refer to “Mounting Brackets” on page 8, steps 3 through 5.
8. Adjust the conveyor tensioning end. See “Conveyor Tension End Adjustment” on page 17.

⚠ WARNING

Tension door closes quickly, may cause injury.
KEEP FINGERS CLEAR OF TENSION DOOR.

9. Carefully close the drive module tension door **(Figure 34, item 1)**. See WARNING.

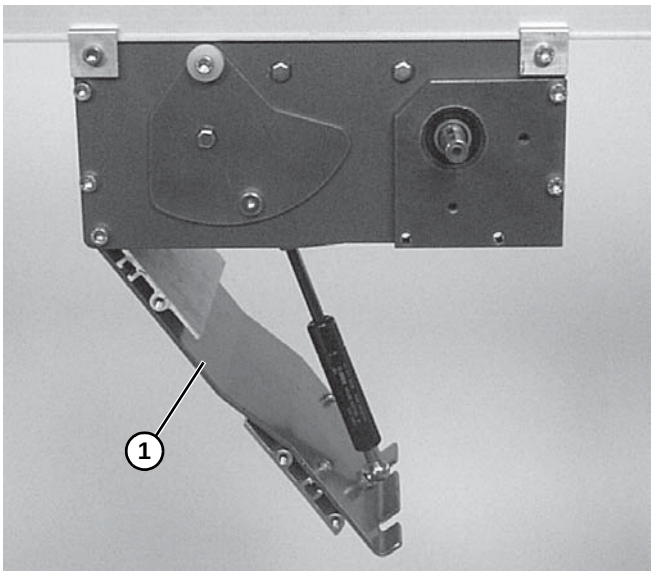

Figure 34

10. Tighten corner screws **(Figure 35, item 1)** on each side of the drive module to 80 in-lb (9 Nm).

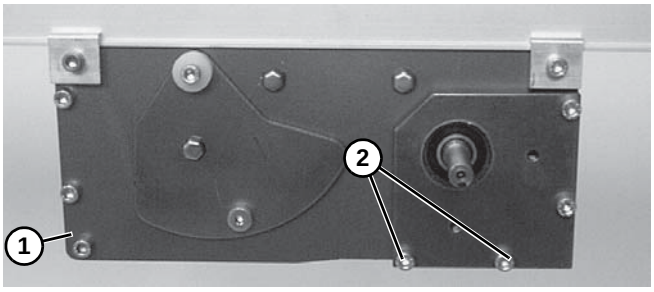

Figure 35

11. If equipped, re-install the gearmotor mounting package. Reverse steps of “Gearmotor Mounting Package Removal” on page 13.
12. Re-install tension door screws **(Figure 35, item 2)** on each side of the module. Tighten screws to 80 in-lb (9 Nm).

NOTE

*With vertically mounted gearmotors, tension door screws **(Figure 35, item** 2) are installed on one side when the gearmotor mounting package is installed.*

13. If equipped, re-install bottom wipers **(Figure 36, item 1)**: Install wiper **(Figure 36, item 2)** then install screws.

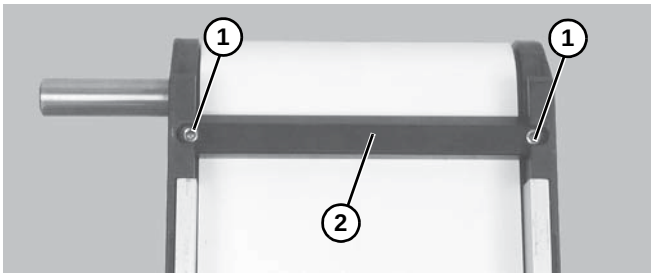

Figure 36

14. If equipped, replace guiding.

Conveyor Belt Tensioning

The conveyor is equipped with an automatic tensioning cylinder. No tensioning adjustment is required.

For a new belt, the tension plate **(Figure 37, item 1)** will be in position indicated below left. When the tension plate extends to position indicated below right, the conveyor belt must be replaced.

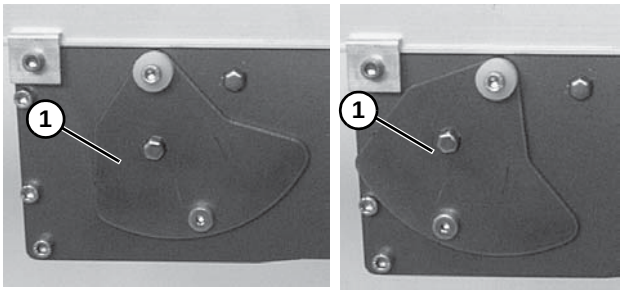

Figure 37

Conveyor Tension End Adjustment

⚠ WARNING

Exposed moving parts can cause severe injury.

LOCK OUT POWER before removing guards or performing maintenance.

Conveyors with 1.25¨ (32 mm) Diameter Pulleys

1. On tension end of the conveyor, identified with a 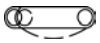 label **(Figure 38, item 1)**, adjust head plate assembly **(Figure 38, item 2)**: On both sides of conveyor, loosen fastening screws **(Figure 38, item 3)** and rotate pinion gear **(Figure 38, item 4)** to adjust head plate assembly.

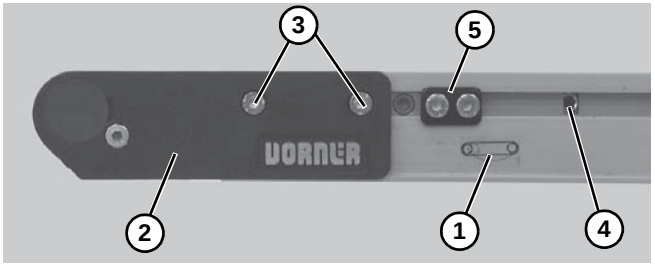

Figure 38

2. Adjust head plate assembly so end of conveyor frame aligns with first tensioning mark **(Figure 39, item 1)**. Tighten fastening screws **(Figure 38, item 2)** on both sides of conveyor to 60 in-lb (7 Nm).

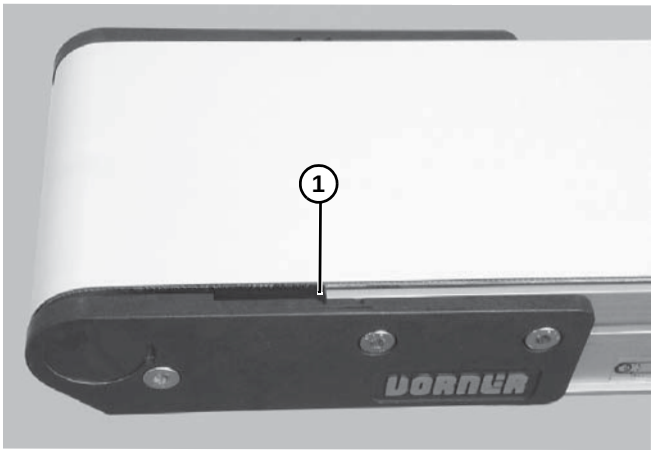

Figure 39

3. If equipped with cam tracking assemblies **(Figure 38, item 1)**, reposition against head plates and adjust belt tracking. Refer to “Conveyor Belt Tracking”, page 19.

Conveyors with Nose Bar Idlers

1. On tension end of the conveyor, identified with a 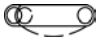 label **(Figure 40, item 1)**, adjust head plate assembly **(Figure 40, item 2)**: On both sides of conveyor, loosen fastening screws **(Figure 40, item 3)** and rotate pinion gear **(Figure 40, item 4)** to adjust head plate assembly.

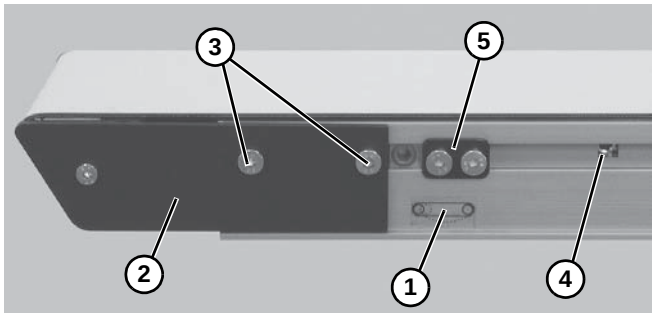

Figure 40

2. Adjust head plate assembly so the edge of the axle support plate **(Figure 41, item 1)** is separated from the end of the conveyor **(Figure 41, item 2)** by 1.125¨ (29 mm). Tighten fastening screws **(Figure 40, item 1)** on both sides of conveyor to 60 in-lb (7 Nm).

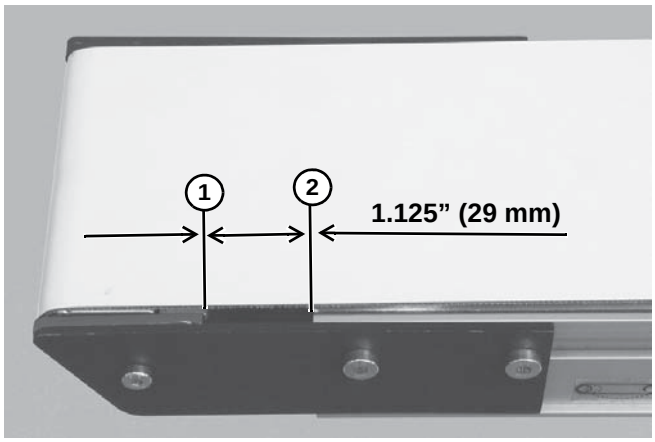

Figure 41

3. If equipped with cam tracking assemblies **(Figure 40, item 3)** position against head plates and adjust belt tracking. Refer to “Conveyor Belt Tracking” on page 19.

Mid Drive Belt Replacement

⚠ WARNING

SEVERE HAZARD!

LOCK OUT POWER before removing guards or performing maintenance. Exposed moving parts can cause serious injury.

1. Remove belt tension. See "Conveyor Belt Replacement" on page 11 for belt releasing belt tension.
2. Remove two M6x25 socket head screws **(Figure 42, item 1)** from bottom of mid drive assembly **(Figure 42, item 2)**.

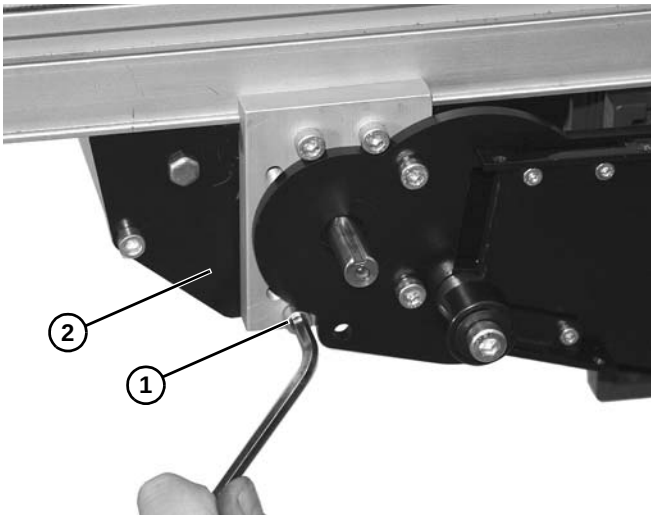

Figure 42

3. Lower and remove mid drive module **(Figure 43, item 1)** from belt **(Figure 43, item 2)**.

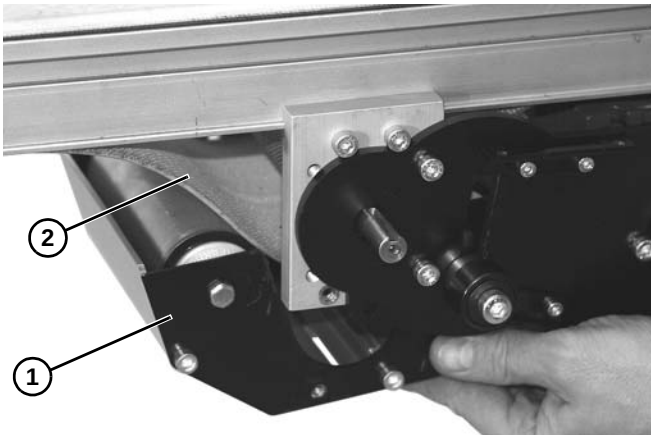

Figure 43

4. Remove belt **(Figure 44, item 1)** from conveyor frame.

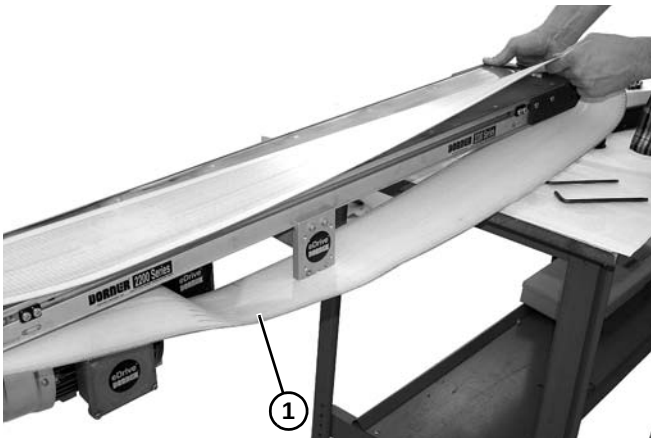

Figure 44

Conveyor Belt Tracking

V-Guided Belts

V-guided belts do not require tracking adjustment.

Non V-Guided Belts

Non V-guided belt conveyors are equipped with belt tracking cam assemblies **(Figure 45, item 1)** for belt tracking adjustment.

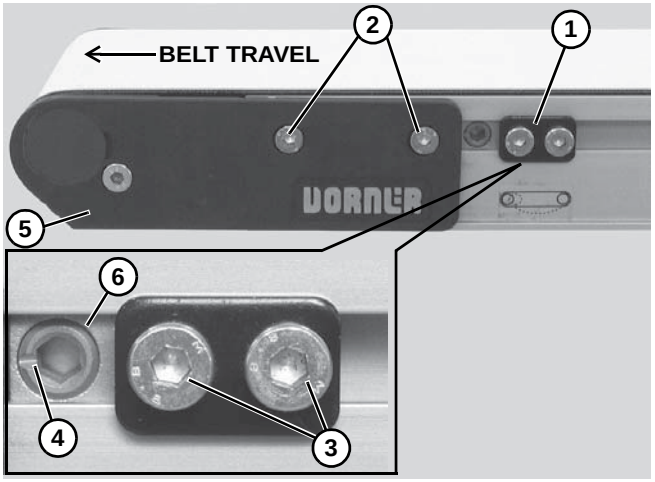

Figure 45

When adjusting belt tracking, always adjust the discharge end of the conveyor first. To adjust belt tracking:

1. Ensure head plate fastening screws **(Figure 45, item 2)** on both sides of conveyor are tightened.
2. On both sides of conveyor, loosen two (2) cam fastening screws **(Figure 45, item 3)**. Adjust cams **(Figure 45, item 4)** until indicator slots **(Figure 45, item 5)** are horizontal and facing end of conveyor. Then slide cam assemblies against head plates **(Figure 45, item 6)** and re-tighten cam fastening screws **(Figure 45, item 3)** to 60 in-lb (7 Nm).
3. On the side toward which the belt is tracking, loosen head plate fastening screws **(Figure 45, item 2)**.
4. With the conveyor running, use a 5 mm hex-key wrench to rotate the tracking cam **(Figure 45, item 4)** in small increments until the belt tracks in the center of the conveyor. Then while holding the cam in position, re-tighten the head plate fastening screws **(Figure 45, item 2)** with a 4 mm hex-key wrench to 60 in-lb (7 Nm).

Pulley Removal

⚠ WARNING

Exposed moving parts can cause severe injury.

LOCK OUT POWER before removing guards or performing maintenance.

Remove the conveyor belt to access the pulley(s). Perform the indicated steps of one of the following procedures:

- "Belt Removal for Conveyor Without Stands or Gearmotor Mounting Package" on page 11, steps 1 through 7.
- "Belt Removal for Conveyor With Stands and Gearmotor Mounting Package" on page 12, steps 1 through 10.

Remove desired pulley following procedures:

- Conveyor End Pulley Removal
- Module Drive Pulley Removal
- Module Idler Pulley Removal

Conveyor End Pulley Removal

1. On one side of the conveyor, loosen two (2) head plate fastening screws **(Figure 46, item 1)** and remove them.

NOTE
To prevent damage to the head plates and pulley, be sure to remove them slowly because they are not attached to pulley.

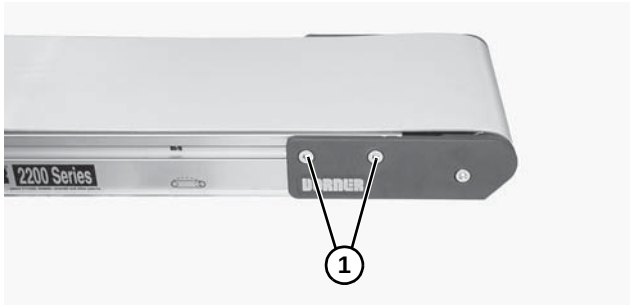

Figure 46

2. Remove the head plate **(Figure 47, item 1)** from the conveyor frame.

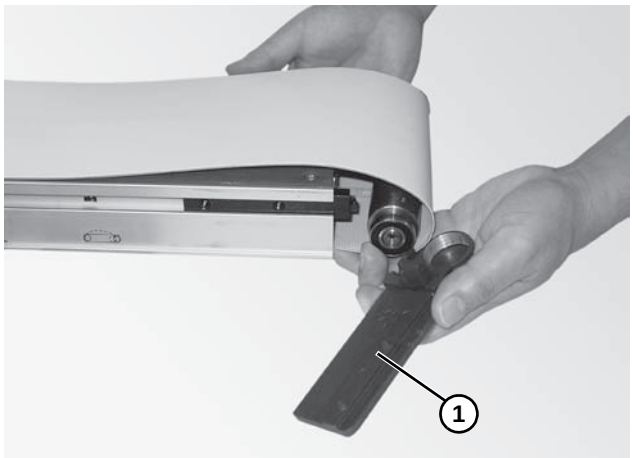

Figure 47

3. Pulley will slide out of opposite head plate and drop into slack of belt **(Figure 48)**.

Figure 48

4. Slide spindle out of the belt loop.

Drive Module Drive Pulley Removal

1. Remove the gearmotor drive package. Refer to "Gearmotor Mounting Package Removal" on page 13.
2. Remove the drive module. Refer to "Drive Module Removal" on page 14.
3. Remove the drive pulley. Refer to "Belt Removal from Drive Module" on page 14, steps 1 and 2.

Drive Module Idler Pulley Removal

1. Remove the gearmotor drive package. Refer to "Gearmotor Mounting Package Removal" on page 13.
2. Remove the drive module. Refer to "Drive Module Removal" on page 14".
3. Remove the grooved idler pulley. Refer to "Belt Removal from Drive Module" on page 14, step 3.
4. Remove smooth idler pulleys:

- For 2" (44 mm), 3" (70 mm) or 4" (95 mm) wide conveyor, detach E-ring clips and remove washers **(Figure 49, item 1)**. Remove pulley shafts **(Figure 49, item 2)** and pulleys **(Figure 49, item 3)**.

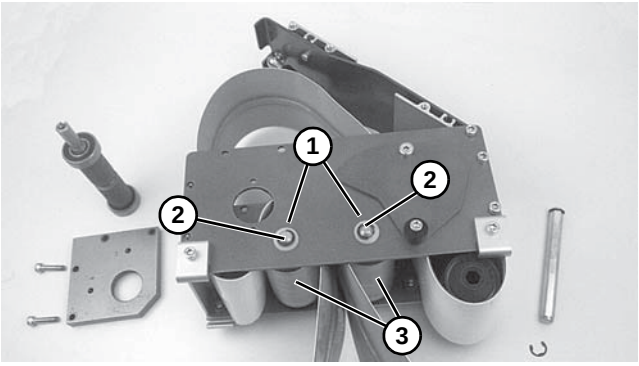

Figure 49

- For 5" (127 mm) or wider conveyor, depress both sides of each spring-loaded shaft **(Figure 50, item 1)**. Remove pulleys **(Figure 50, item 2)**.

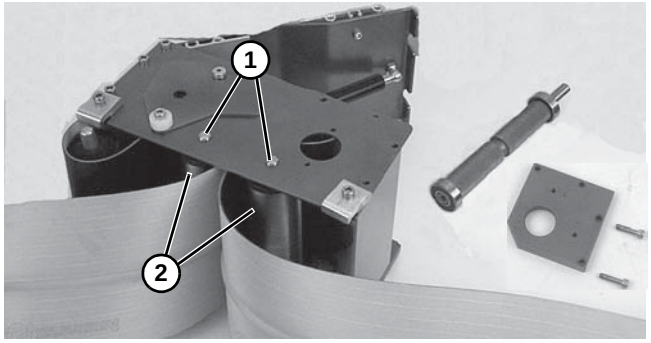

Figure 50

Conveyor Pulley Bearing Removal and Replacement

Removal

IMPORTANT

Do not use any removed bearings. Replace them.

1. Place bearing removal tool part #456063 **(Figure 51, item 1)** below bearing **(Figure 51, item 2)** with lip **(Figure 51, item 3)** located in gap **(Figure 51, item 4)** between bearing and spindle hub **(Figure 51, item 5)** as shown.

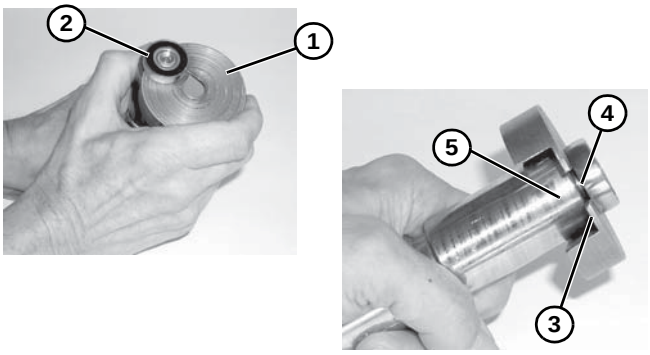

Figure 51

2. Using a puller part #807-1716 **(Figure 52, item 1)**, remove and discard bearing.

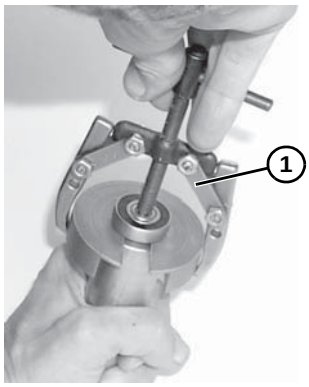

Figure 52

Replacement

1. Inspect the head plates bearing seating surface **(Figure 53, item 1)**. If they are worn or damaged, replace the head. See “Service Parts” on page 24.

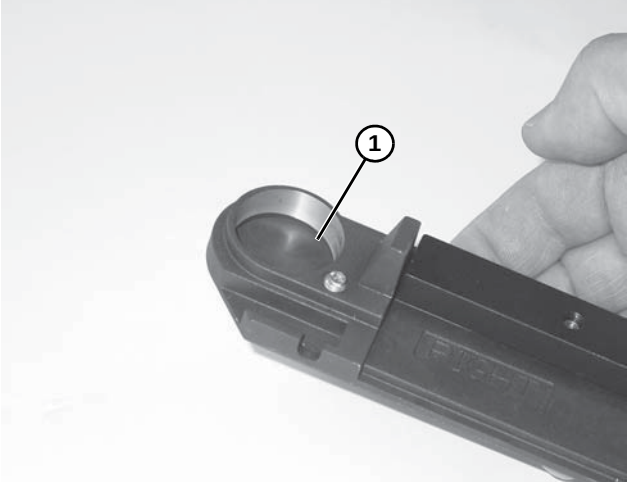

Figure 53

2. Slide bearing **(Figure 54, item 1)** onto spindle **(Figure 54, item 2)**.

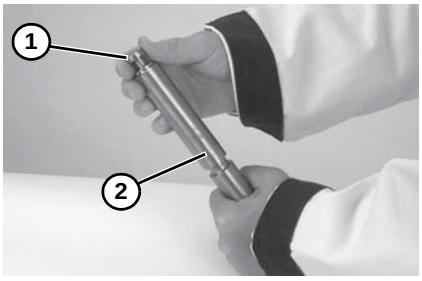

Figure 54

3. Using an arbor press or similar device, press bearing onto pulley shaft **(Figure 55)**.

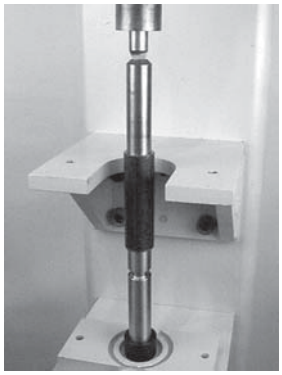

Figure 55

4. Repeat steps 1 through 3 for each bearing.

Conveyor Pulley Installation

1. With opposite head plate installed, position the conveyor pulley through the loop of the belt, into the opposite head plate.

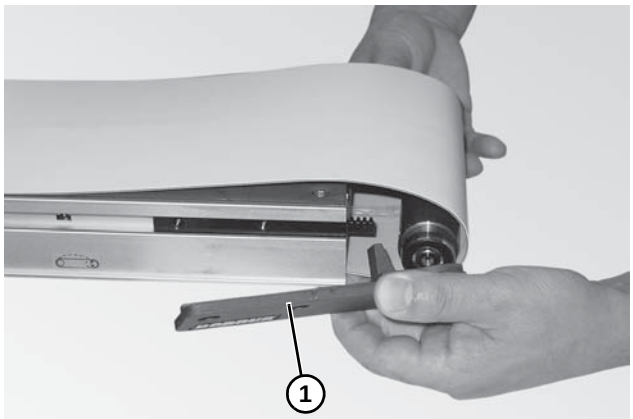

Figure 56

2. Place the head plate **(Figure 56, item 1)** and attach the head plate to the conveyor frame with the two (2) plates removed. tighten screws 60 in-lb (7 Nm).

Drive Module Drive Pulley

1. Reverse "Drive Module Drive Pulley Removal" procedure on page 20.
2. Re-install belt on end of conveyor, then tension the belt. See "Conveyor Tension End Adjustment", page 17.
3. Re-position the cam assemblies against the head plates and adjust belt tracking. See "Conveyor Belt Tracking", page 19.

Drive Module Idler Pulley

1. Reverse "Drive Module Idler Pulley Removal" procedure on page 20.
2. Re-install belt on end of conveyor, then tension the belt. See "Conveyor Tension End Adjustment", page 17.
3. Re-position the cam assemblies against the head plates and adjust belt tracking. See "Conveyor Belt Tracking", page 19.

Nose Bar Bearing Replacement

⚠ WARNING

Exposed moving parts can cause severe injury.
LOCK OUT POWER before removing guards or performing maintenance.

1. Remove the conveyor belt to access the bearings. Perform the indicated steps of one of the following procedures:

- "Belt Removal for Conveyor Without Gearmotor Mounting Package or Stands", page 11, steps 1 through 7.
- "Belt Removal for Conveyor With Stands and Gearmotor Mounting Package", page 12, steps 1 through 10.

2. On one side of conveyor, use a 3 mm and 4 mm hex-key wrench to remove head plate fastening screws **(Figure 57, item 1 & 2)** and remove head plate **(Figure 57, item 3)**.

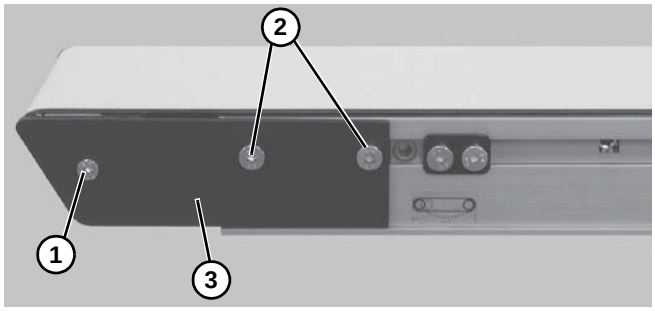

Figure 57

3. Slide bearing rods **(Figure 58, item 1)** out side of conveyor and replace bearings **(Figure 58, item 2)** as necessary.

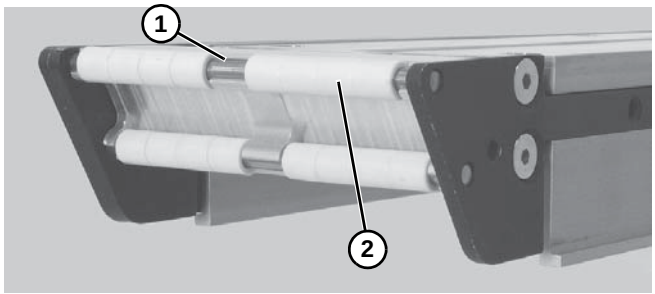

Figure 58

4. After replacing bearings, re-install head plate **(Figure 57, item 3)**. Use a 3 mm hex-key wrench to tighten one (1) fastening screw **(Figure 57, item 1)** to 30 in-lb (3.4 Nm). Leave two (2) fastening screws **(Figure 57, item 2)** loose for belt tensioning.
5. Re-install belt on end of conveyor, then tension the belt. See "Conveyor Tension End Adjustment", page 17.
6. Re-position the cam assemblies against the head plates and adjust belt tracking. See "Conveyor Belt Tracking", page 19.

Mid Drive Spindle Replacement

1. On tension end of the conveyor, identified with a label **(Figure 59, item 1)**, push in head plate assembly **(Figure 59, item 2)**: On both sides of conveyor, loosen and move cam tracking assemblies **(Figure 59, item 3)** (if equipped) away from head plates, then loosen fastening screws **(Figure 59, item 4)** and push head plate assembly inward.

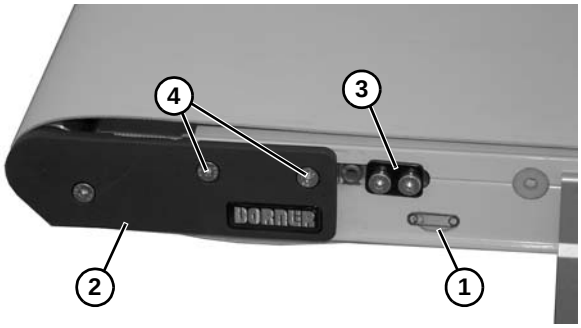

Figure 59

2. Remove drive package. See your appropriate Drive Package manual for removal procedure.
3. Loosen one M6x25 socket head screw **(Figure 60, item 1)** from each side of mounting block **(Figure 60, item 2)**.

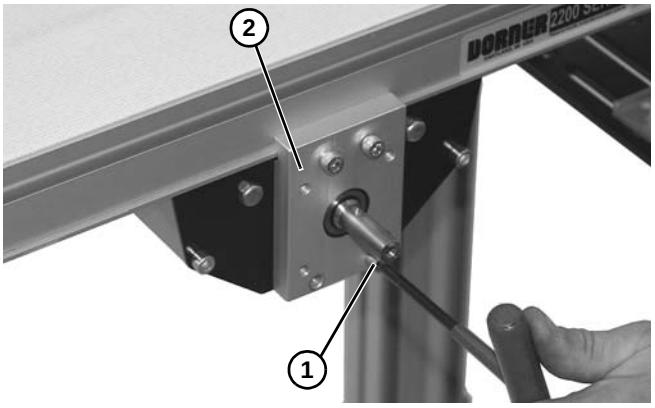

Figure 60

4. Lower and remove mid drive module **(Figure 61, item 1)** from belt **(Figure 61, item 2)**.

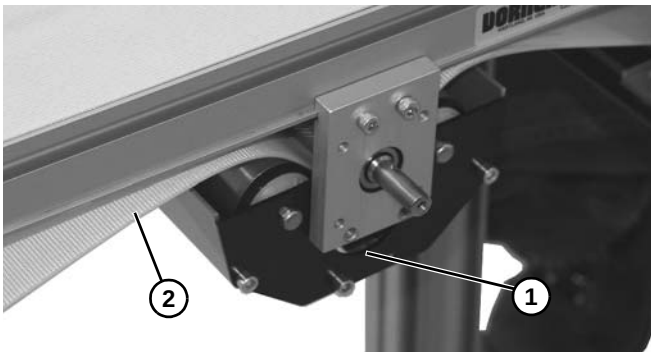

Figure 61

5. Loosen two M6x25 socket head screws **(Figure 62, item 1)** from each side of mounting block **(Figure 62, item 2)**.

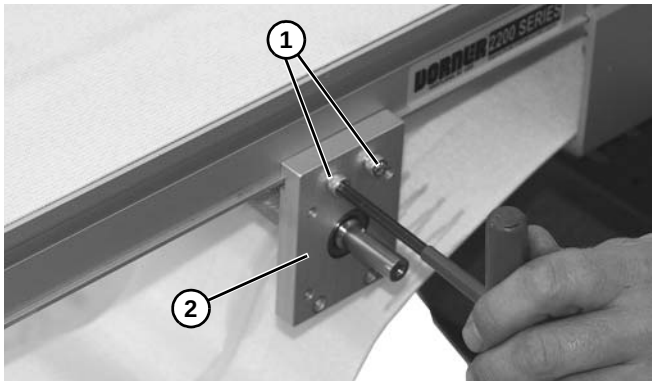

Figure 62

6. Separate mounting blocks **(Figure 63, item 1)** from spindle **(Figure 63, item 2)**.

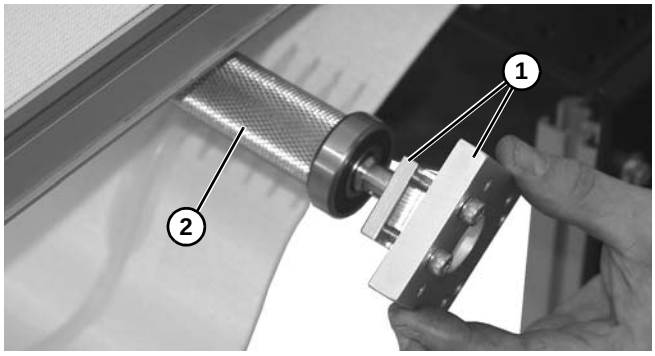

Figure 63

7. Replace spindle.
8. Install components, reverse order of removal.
9. Be certain to use a straight edge **(Figure 64, item 1)** across mounting blocks **(Figure 64, item 2)**, so blocks are parallel to one another, before tightening hardware.

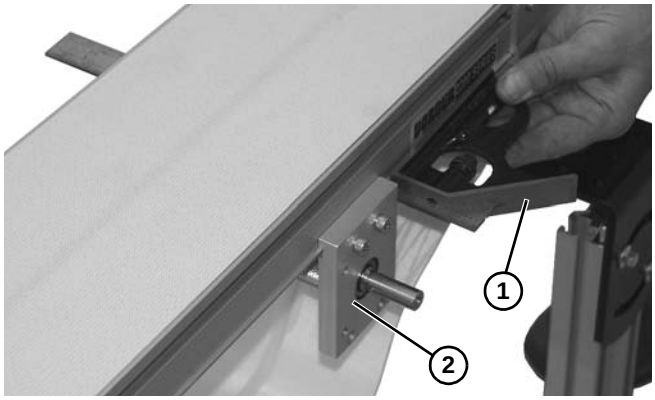

Figure 64

10. Tighten socket head screws **(Figure 60, item 1)** and **(Figure 62, item 1)** to 60 in-lb (7 Nm).
11. Tension conveyor belt. See “Conveyor Belt Tensioning” on page 16.

Service Parts

NOTE

For replacement parts other than those shown in this section, contact an authorized Dorner Service Center or the factory. Key Service Parts and Kits are identified by the Performance Parts Kits logo . Dorner recommends keeping these parts on hand.

2” (51 mm) Wide Conveyor

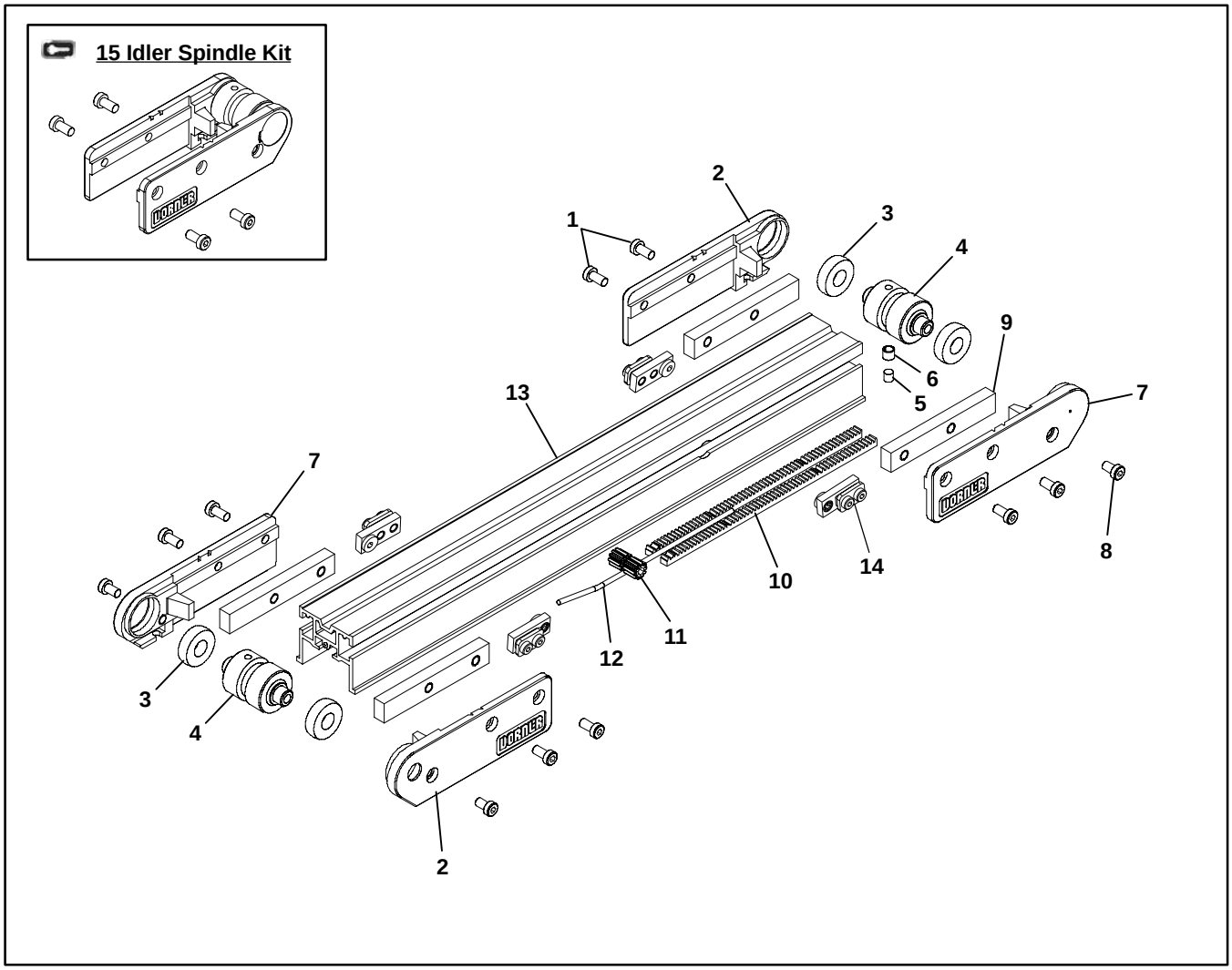

Item	Part Number	Description
1	920692M	Socket Head Screw, M6 x 12 mm
2	240425	Head Plate LH
3	22BK2	Bearing Kit (x2)
	22BK4	Bearing Kit (x4)
4	247302	Idler Spindle, 2” (51 mm)
5	808–020	Magnet 0.25” Dia. x 0.25” long
6	450226SSP	Sleeve, 0.25” Magnet Stainless Steel
7	240426	Head Plate RH
8	920691M	Socket Head Screw, M6 x 10 mm

Item	Part Number	Description
9	240329	Tension Slide Bar
10	240420	Rack Gear, 14.5 Degree PA x 24 P
11	240423	Pinion, 2” (51 mm)
12	240422	Pinion Pin
13	240402-LLLLL	2” (51 mm) Frame
14	240025	Cam Mounting Assembly
15	22T–02	Idler Spindle Kit (Includes Items 1 through 8)
LLLLL = part length in inches with 2 decimal places		
Example: Part Length = 55.08" LLLLL = 05508		

3” (76 mm) to 6” (152 mm) Wide Conveyor

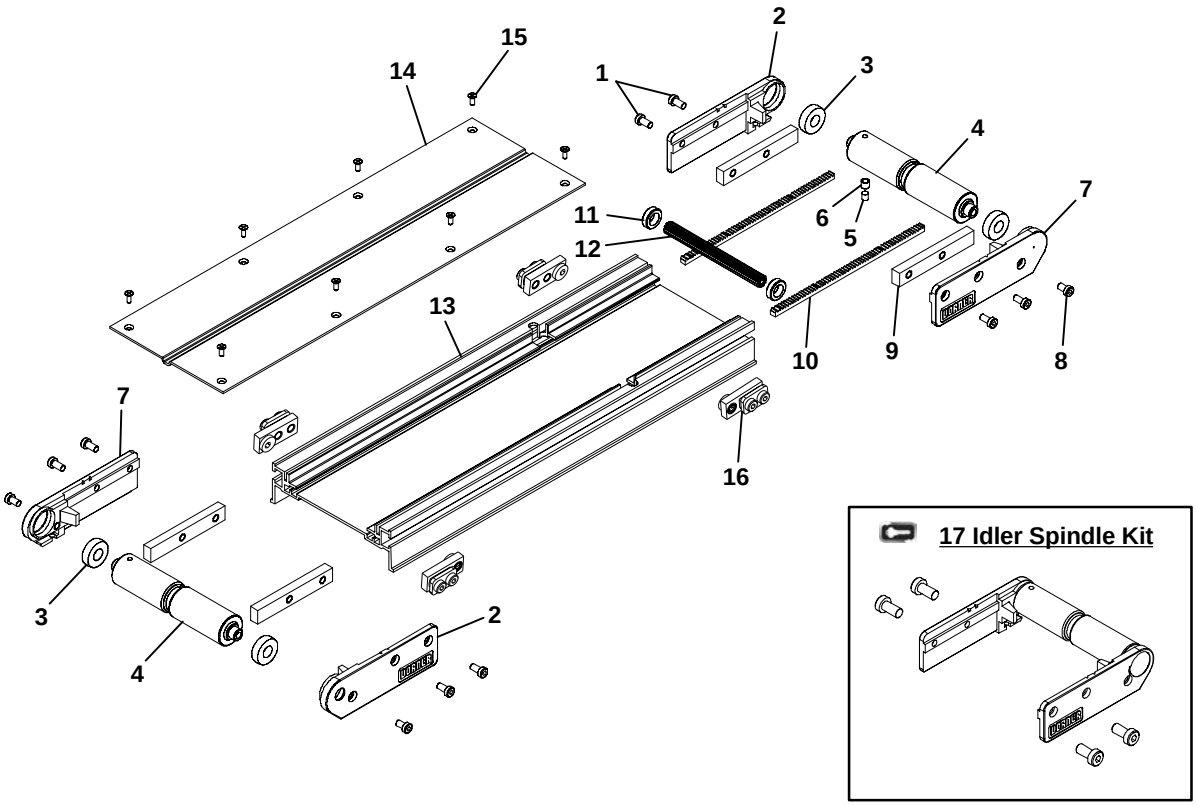

Item	Part Number	Description
1	920692M	Socket Head Screw, M6 x 12 mm
2	240425	Head Plate LH
3	22BK2	Bearing Kit (x2)
	22BK4	Bearing Kit (x4)
4	2473WW	Idler Spindle
5	808–020	Magnet, 0.25” Dia. x 0.25” long
6	450226SSP	Sleeve, 0.25” Magnet Stainless Steel
7	240426	Head Plate, RH
8	920691M	Socket Head Screw, M6 x 10 mm
9	240329	Tension Slide Bar
10	240420	Rack Gear, 14.5 Degree PA x 24P

Item	Part Number	Description
11	240421	Pinion Bushing
12	2030WWM	Pinion Gear
13	2404WW-LLLLL	Conveyor Frame
14	2405WW-LLLLL	Conveyor Bed Plate
15	807–1105	Flat Head Torx Screw, M6 x 10 mm
16	240025	Cam Mounting Assembly
17	22T–WW	Idler Spindle Kit (Includes Items 1 through 8)
WW = Conveyor width reference: 03, 04, 05, 06		
LLLLL = part length in inches with 2 decimal places		
Example: Part Length = 55.08" LLLLL = 05508		

Service Parts

8” (203 mm) to 12” (305 mm) Wide Conveyor

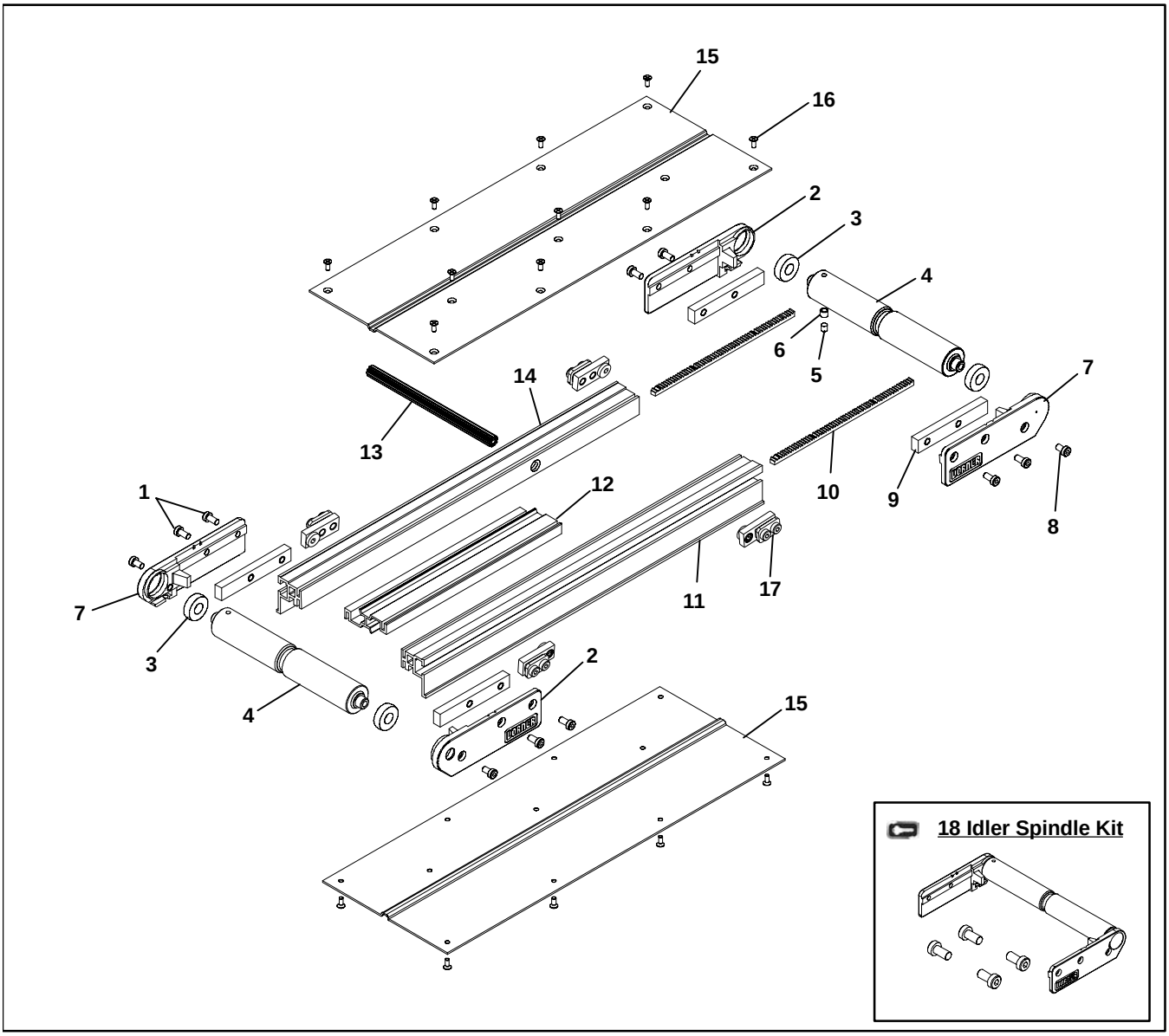

Item	Part Number	Description
1	920692M	Socket Head Screw, M6 x 12 mm
2	240425	Head Plate LH
3	22BK2	Bearing Kit (x2)
	22BK4	Bearing Kit (x4)
4	2473WW	Idler Spindle
5	808–020	Magnet, 0.25” Dia. x 0.25” long
6	450226SSP	Sleeve, 0.25” Magnet Stainless Steel
7	240426	Head Plate RH
8	920691M	Socket Head Screw, M6 x 10 mm
9	240329	Tension Slide Bar
10	240420	Rack Gear, 14.5 Degree PA x 24 P
11	240412-LLLLL	Side Rail, LH
12	240414-LLLLL	Center Rail
13	2030WWM	Pinion Gear

Item	Part Number	Description
14	240413-LLLLL	Side Rail, RH
15	2405WW-LLLLL	Conveyor Bed Plate
16	807–1105	Flat Head Torx Screw, M6 x 10 mm
17	240025	Cam Mounting Assembly
18	22T–WW	Idler Spindle Kit (Includes Items 1 through 8)
WW = Conveyor width reference: 08, 10, 12		
LLLLL = part length in inches with 2 decimal places		
Example: Part Length = 55.08" LLLLL = 05508		

18” (457 mm) to 24” (610 mm) Wide Conveyor

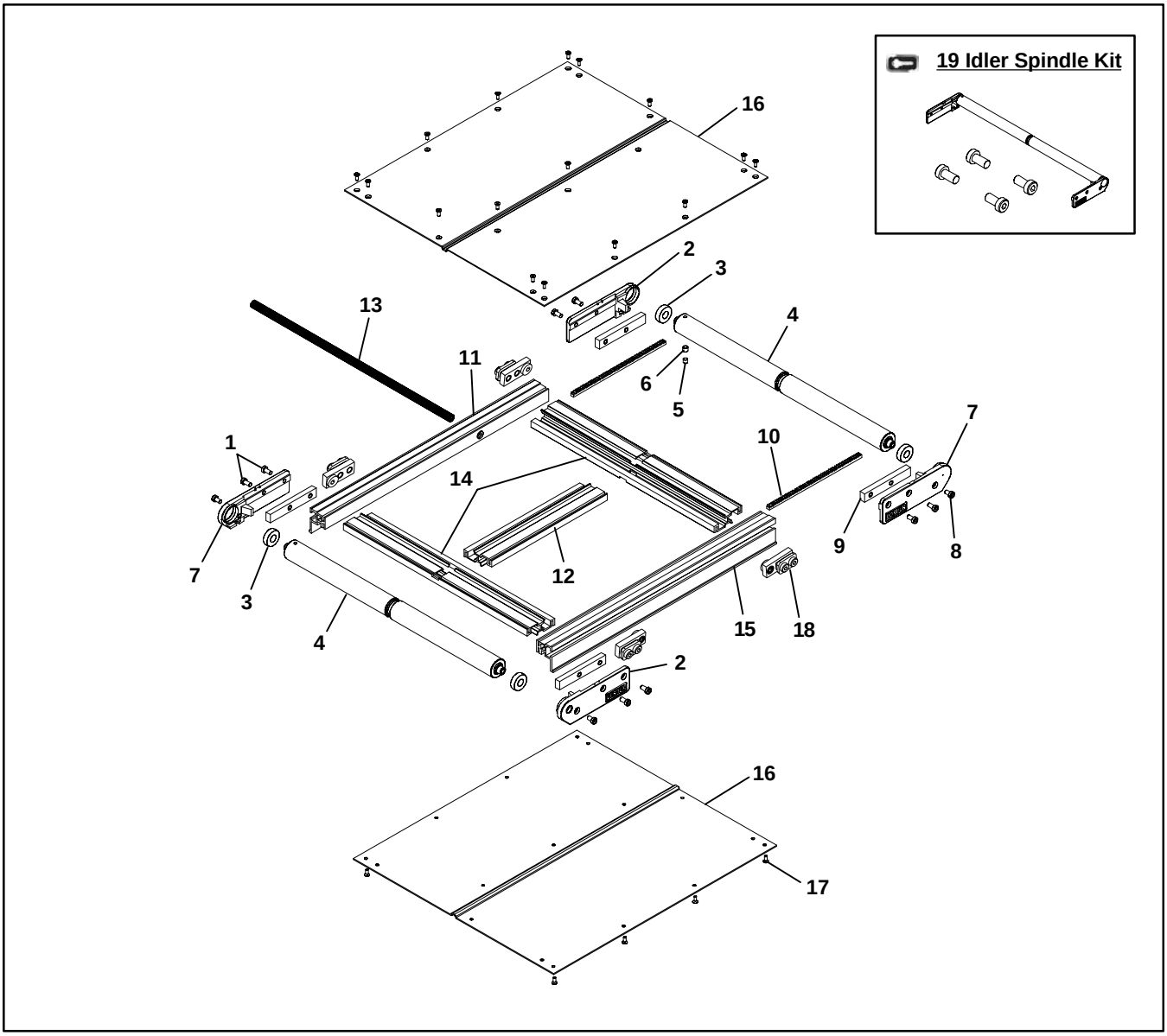

Item	Part Number	Description
1	920692M	Socket Head Screw, M6 x 12 mm
2	240425	Head Plate, LH
3	22BK2	Bearing Kit (x2)
	22BK4	Bearing Kit (x4)
4	2473WW	Idler Spindle
5	808–020	Magnet, 0.25” Dia. x 0.25” long
6	450226SSP	Sleeve, 0.25” Magnet Stainless Steel
7	240426	Head Plate, RH
8	920691M	Socket Head Screw, M6 x 10 mm
9	240329	Tension Slide Bar
10	240420	Rack Gear, 14.5 Degree PA x 24 P
11	240413-LLLLL	Side Rail, RH
12	240414-LLLLL	Center Rail
13	2030WWM	Pinion Gear

Item	Part Number	Description
14	240417	Center Rail Cross Support, 18” (457 mm)
	240418	Center Rail Cross Support, 21” (533 mm)
	240419	Center Rail Cross Support, 24” (610 mm)
15	240412-LLLLL	Side Rail LH
16	2405WW-LLLLL	Conveyor Bed Plate
17	807–1105	Flat Head Torx Screw, M6 x 10 mm
18	240025	Cam Mounting Assembly
19	22T–WW	Idler Spindle Kit (Includes Items 1 through 2 and 4 through 9)
WW = Conveyor width reference: 18, 21, 24		
LLLLL = part length in inches with 2 decimal places		
Example: Part Length = 55.08" LLLLL = 05508		

Service Parts

2200 Center Drive Module

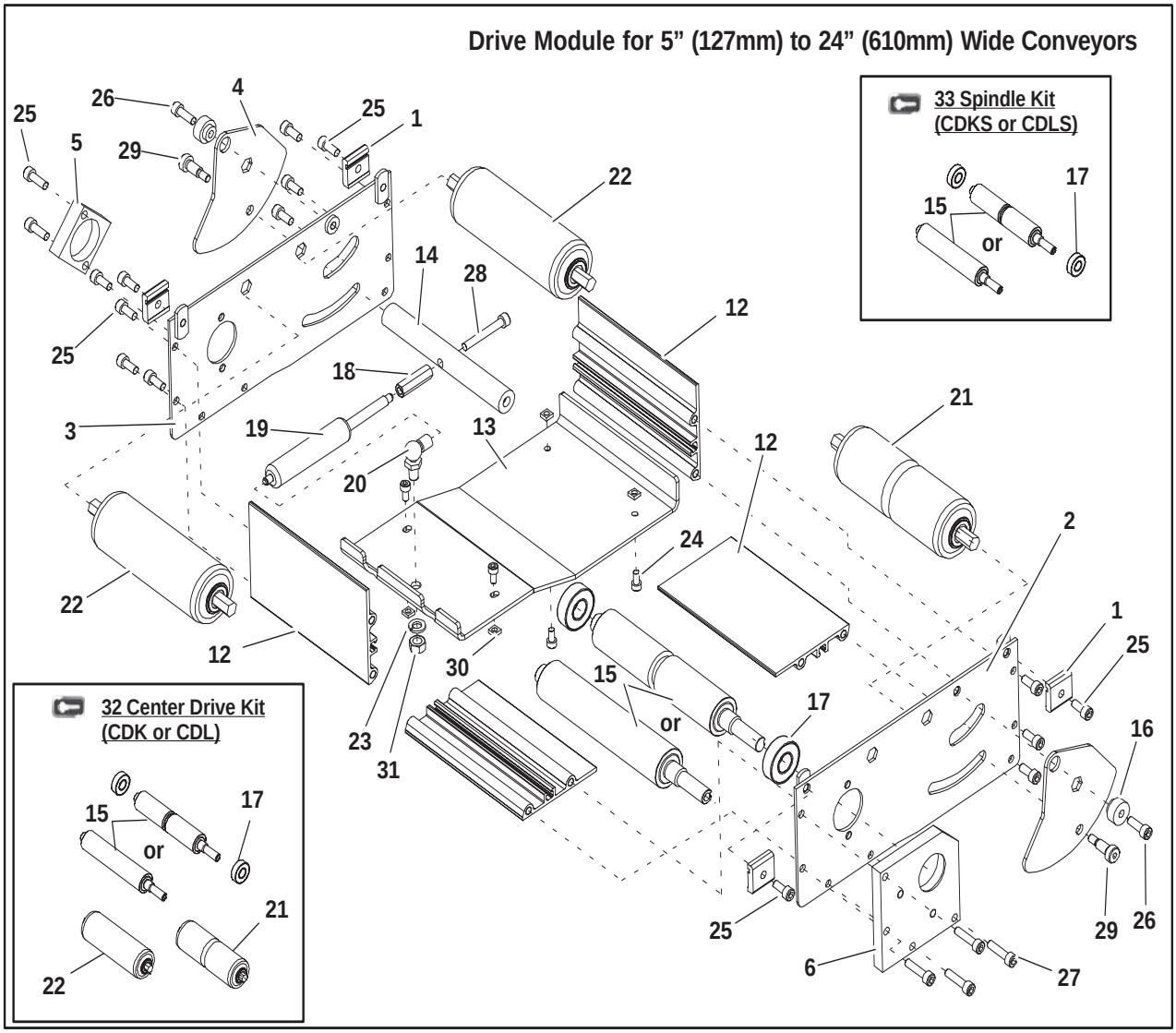

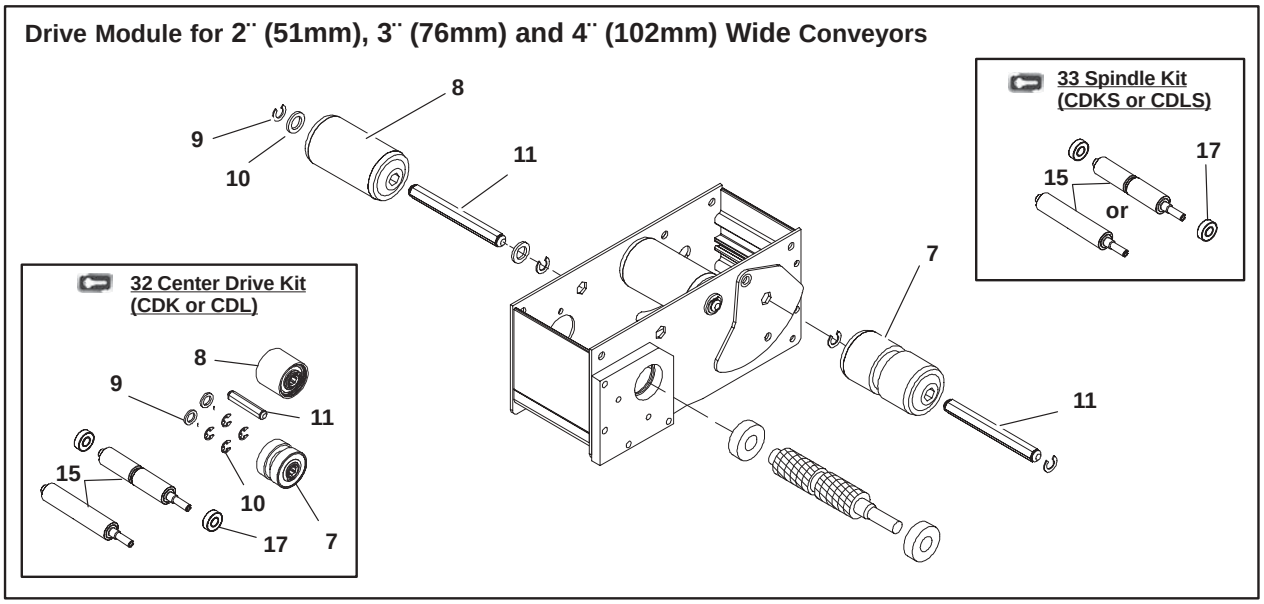

Item	Part Number	Description
1	204566	Module Mounting Clip
2	202633M	Side Plate, LH
3	202634M	Side Plate, RH
4	463026M	Pivot Tension Plate
5	463028M	Bearing Mounting Block
6	463029M	Bearing–Drive Mounting Plate
7	463044	Roller 1.9” 0.44hex Grv 2” (51 mm)
	463045	Roller 1.9” 0.44hex Grv 3” (76 mm)
	807–1001	Roller 1.9” 0.44hex Grv 4” (102 mm)
8	807–2093	Roller 1.9” 0.44hex SS Flat 2” (51 mm)
	807–1007	Roller 1.9” 0.44hex SS Flat 3” (76 mm)
	807–1008	Roller 1.9” 0.44hex SS Flat 4” (102 mm)
9	915-215	E-Ring Clip (0.44 diameter)
10	801-115	Washer
11	4634WW	Pulley Shaft
12	4638WW	Center Drive Rail
13	4632WWM	Center Drive Bottom Cover, 2” (51 mm) through 18” (457 mm)
	463205M	Center Dr Bottom Cover, 21” (533 mm)
	463208M (2x)	
	463212M (2x)	Center Dr Bottom Cover, 24” (610 mm)
14	4633WWM	Center Drive Tensioning Rod
15	4637WWM	Center Drive Spindle – Knurled
	4639WWM	Center Drive Spindle – Lagged
16	801–117	Nylon Bushing
17	802–124	Ball Bearing
18	807–983	Hex Standoff, 13 mm x 35 mm LG M6
19	807–1040	Gas Spring, 2” (5 1mm) w/o Nosebar
	807–1310	Gas Spring, 2” (51 mm) w/Nosebar
	807–986	Gas Spring, 3” (76 mm) w/o Nosebar
	807–1310	Gas Spring, 3” (76 mm) w/Nosebar
	807–985	Gas Spring, 4–6” (102–152 mm)
	807–984	Gas Spring, 8–12” (203–305 mm)
	807–985	Gas Spring, 18–24” (457–610 mm) (2x)
20	807–987	Steel Ball Joint M6 x M8
21	807–1002	Roller 1.9” 0.44 Hex Grv 5” (127 mm)
	807–1003	Roller 1.9” 0.44 Hex Grv 6” (152 mm)
	807–1004	Roller 1.9” 0.44 Hex Grv 8” (203 mm)
	807–1005	Roller 1.9” 0.44 Hex Grv 10” (203 mm)
	807–1006	Roller 1.9” 0.44 Hex Grv 12” (305 mm)
	807–1091	Roller 1.9” 0.44 Hex Grv 18” (457 mm)
	807–1092	Roller 1.9” 0.44 Hex Grv 21” (533 mm)
	807–1093	Roller 1.9” 0.44 Hex Grv 24” (610 mm)
22	807–1009	Roller 1.9” 0.44 Hex Flat 5” (51 mm)
	807–1010	Roller 1.9” 0.44 Hex Flat 6” (152 mm)
	807–1011	Roller 1.9” 0.44 Hex Flat 8” (203 mm)
	807–1012	Roller 1.9” 0.44 Hex Flat 10” (203 mm)
	807–1013	Roller 1.9” 0.44 Hex Flat 12” (305 mm)
	807–1088	Roller 1.9” 0.44 Hex Flat 18” (457 mm)
	807–1089	Roller 1.9” 0.44 Hex Flat 21” (533 mm)
	807–1090	Roller 1.9” 0.44 Hex Flat 24” (610 mm)
23	911–120	Spring Lock Washer
24	920510M	Socket Head Screw, M5 x 10 mm
25	920620M	Socket Head Screw, M6 x 20 mm

Item	Part Number	Description
26	920618M	Socket Head Screw, M6 x 18 mm
27	920630M	Socket Head Screw, M6 x 30 mm
28	920625M	Socket Head Screw, M6 x 25 mm
29	940812M	SHLD Screw, 8 mm DIA x 12 mm
30	990503M	Square Nut, Heavy M5 – 0.8
31	990801M	Hex Nut, Full M8 – 1.25
32	CDK–WW	Center Drive Repair Kit – Knurled (Includes Items 7 through 11, 15, and 17)
	CDKL–WW	Center Drive Repair Kit – Lagged (Includes Items 7 through 11, 15, and 17)
33	CDKS–WW	Spindle Repair Kit – Knurled (Includes Items 15 and 17)
	CDLS–WW	Spindle Repair Kit – Lagged (Includes Items 15 and 17)
WW = Conveyor width ref.: 02, 03, 04, 05, 06, 08, 10, 12, 18, 21, 24		

Service Parts

Nosebar End Assembly

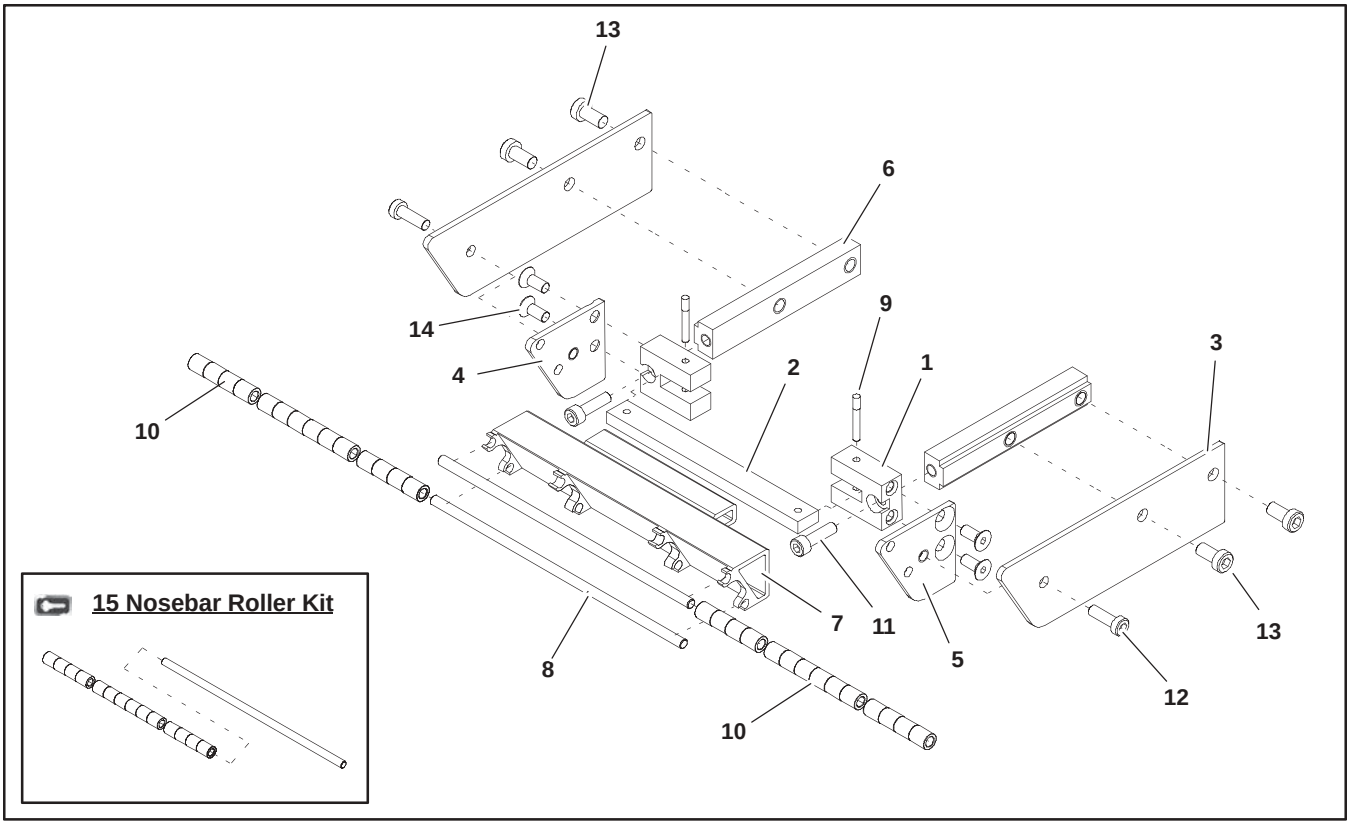

Item	Part Number	Description
1	201965	Mounting Block, PLT Spindle
2	2076WW	Flex–Link Bar
3	241125	Outer Side Plate
4	241126	Inner Side Plate LH
5	241127	Inner Side Plate RH
6	241128	Head Plate Bar
7	2412WW	Nosebar
8	2413WW	Nosebar Rod
9	200695P	Knurl Pin, 0.125” DIA x 0.937” Lg
10	801–122	Nose Bar Roller
11	920518M	Socket Head Screw M5 x 18mm
12	920593M	Socket Head Screw M5 x 16mm
13	920692M	Socket Head Screw M6 x 12mm
14	930512M	Flat Head Screw M5 x 12mm
15	22N–WW	Nosebar Roller Kit (Includes Items 8 and 10)
WW= Conveyor width ref.: 02, 03, 04, 05, 06, 08, 10, 12, 18, 21, 24		

Mid Drive Module

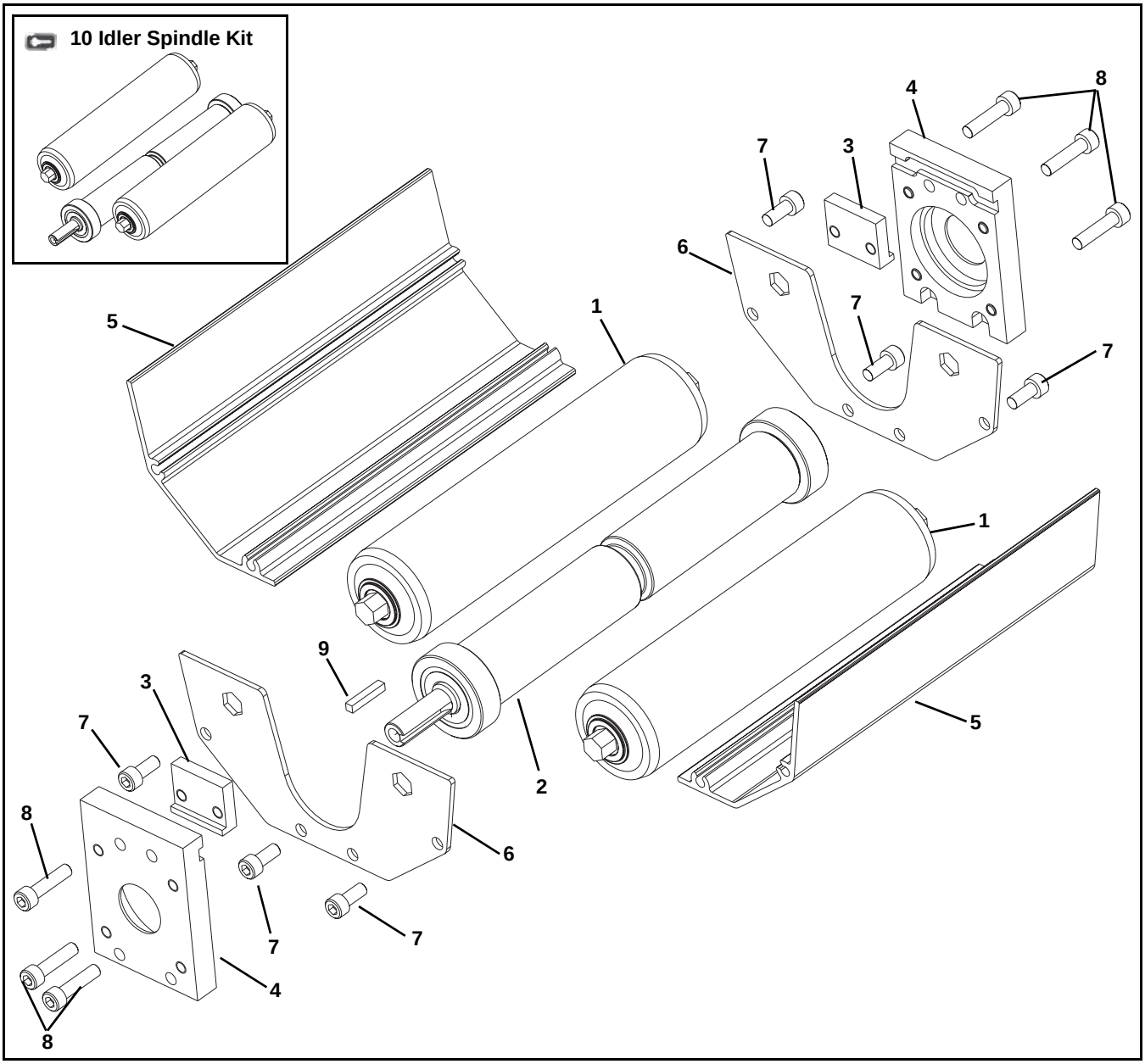

Item	Part Number	Description
1	463040	Idler Roller Assembly for 2" wide Conveyor
	463041	Idler Roller Assembly for 3" wide Conveyor
	463042	Idler Roller Assembly for 4" wide Conveyor
	807-1009	Idler Roller for 5" wide Conveyor
	807-1010	Idler Roller for 6" wide Conveyor
	807-1011	Idler Roller for 8" wide Conveyor
	807-1012	Idler Roller for 10" wide Conveyor
	807-1013	Idler Roller for 12" wide Conveyor
	807-1088	Idler Roller for 18" wide Conveyor
	807-1089	Idler Roller for 21" wide Conveyor
	807-1090	Idler Roller for 24" wide Conveyor
2	202457-WW	Knurled Spindle Assembly
	202458-WW	Lagged Spindle Assembly

Item	Part Number	Description
3	202353	Clamp Block
4	202354	Mounting Block
5	202455-WW	Bottom Guard
6	202456	Side Plate
7	7801180P	Socket Head Screw, M6-1.00 x 14 mm
8	920625M	Socket Head Screw, M6-1.00 x 25 mm
9	980428M	Square Key 4 mm x 28 mm
10	22MD-WW	Lagged Spindle Kit (Includes items 1 & 2)
	22MDK-WW	Knurled Spindle Kit (Includes items 1 & 2)
WW = Conveyor Width Reference: 02, 03, 04, 05, 06, 08, 12, 18, 21 & 24		

Service Parts

–04 3” (76 mm) Aluminum Side

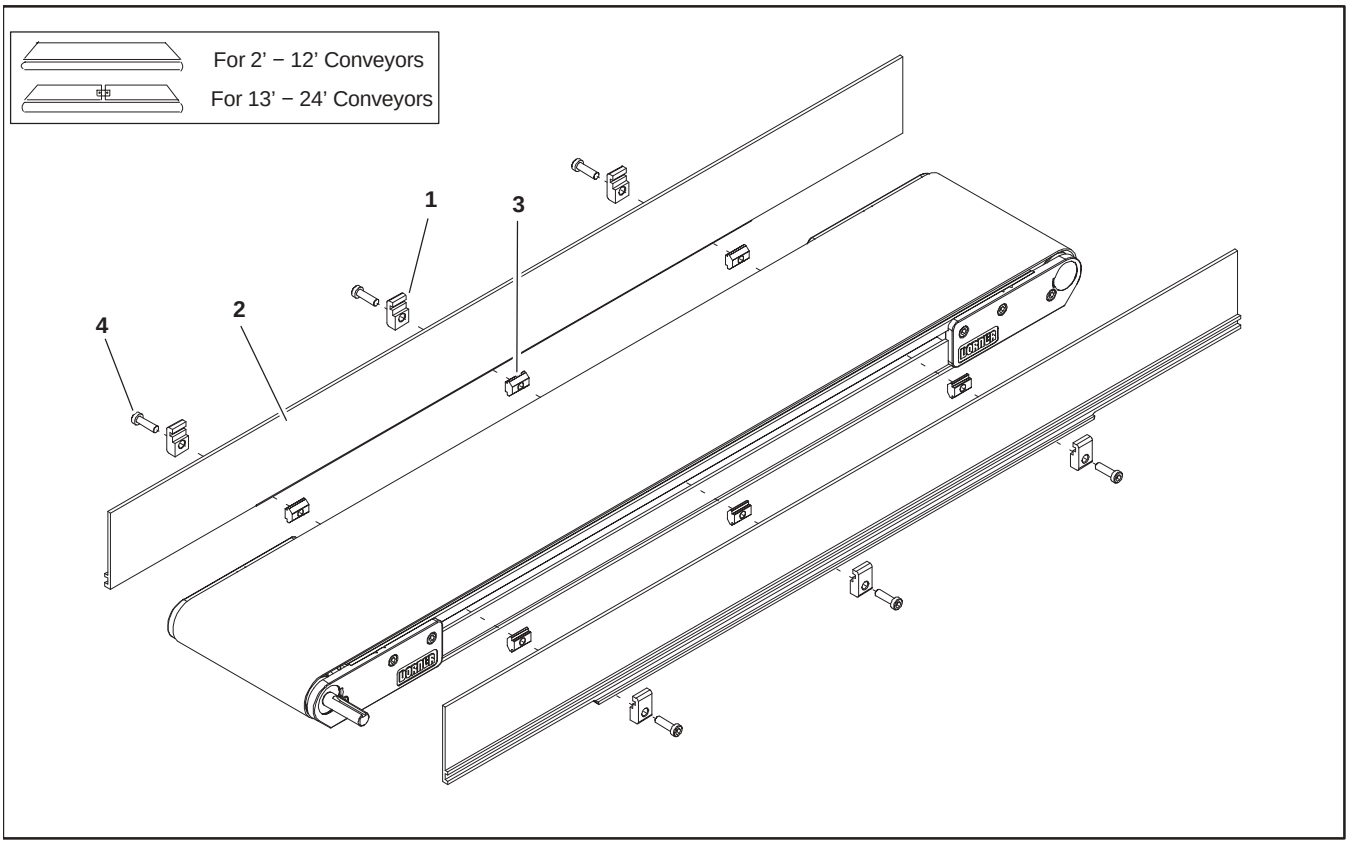

Item	Part Number	Description
1	200121	Guide Retaining Clip
2	See Chart	2200 Guide 3” (76mm) HS
3	639971MK10	Single Drop–in Tee Bar (x10)
4	920694M	Socket Head Screw M6 x 20mm

Item 2: 2200 Guide 3” (76mm) HS			
Length		End Guide	End Guide
2’ (610mm)	Left Hand	280403–02400	N/A
	Right hand	280403–02400	N/A
3’ (914mm)	Left Hand	280403–03600	N/A
	Right hand	280403–03600	N/A
4’ (1219mm)	Left Hand	280403–04800	N/A
	Right hand	280403–04800	N/A
5’ (1524mm)	Left Hand	280403–06000	N/A
	Right hand	280403–06000	N/A
6’ (1829mm)	Left Hand	280403–07200	N/A
	Right hand	280403–07200	N/A
7’ (2134mm)	Left Hand	280403–08400	N/A
	Right hand	280403–08400	N/A
8’ (2438mm)	Left Hand	280403–09600	N/A
	Right hand	280403–09600	N/A
9’ (2743mm)	Left Hand	280403–10800	N/A
	Right hand	280403–10800	N/A
10’ (3048mm)	Left Hand	280403–12000	N/A
	Right hand	280403–12000	N/A
11’ (3353mm)	Left Hand	280403–13200	N/A
	Right hand	280403–13200	N/A

Item 2: 2200 Guide 3” (76mm) HS			
Length		End Guide	End Guide
12’ (3658mm)	Left Hand	280403–14400	N/A
	Right hand	280403–14400	N/A
13’ (3962mm)	Left Hand	280401–07500	280401–08100
	Right hand	280402–07500	280402–08100
14’ (4267mm)	Left Hand	280401–07500	280401–09300
	Right hand	280402–07500	280402–09300
15’ (4572mm)	Left Hand	280401–07500	280401–10500
	Right hand	280402–07500	280402–10500
16’ (4877mm)	Left Hand	280401–07500	280401–11700
	Right hand	280402–07500	280402–11700
17’ (5182mm)	Left Hand	280401–07500	280401–12900
	Right hand	280402–07500	280402–12900
18’ (5486mm)	Left Hand	280401–07500	280401–14100
	Right hand	280402–07500	280402–14100
19’ (5791mm)	Left Hand	280401–14700	280401–08100
	Right hand	280402–14700	280402–08100
20’ (6096mm)	Left Hand	280401–14700	280401–09300
	Right hand	280402–14700	280402–09300
21’ (6401mm)	Left Hand	280401–14700	280401–10500
	Right hand	280402–14700	280402–10500
22’ (6706mm)	Left Hand	280401–14700	280401–11700
	Right hand	280402–14700	280402–11700
23’ (7010mm)	Left Hand	280401–14700	280401–12900
	Right hand	280402–14700	280402–12900
24’ (7315mm)	Left Hand	280401–14700	280401–14100
	Right hand	280402–14700	280402–14100

–05 1.5” (38 mm) Aluminum Side

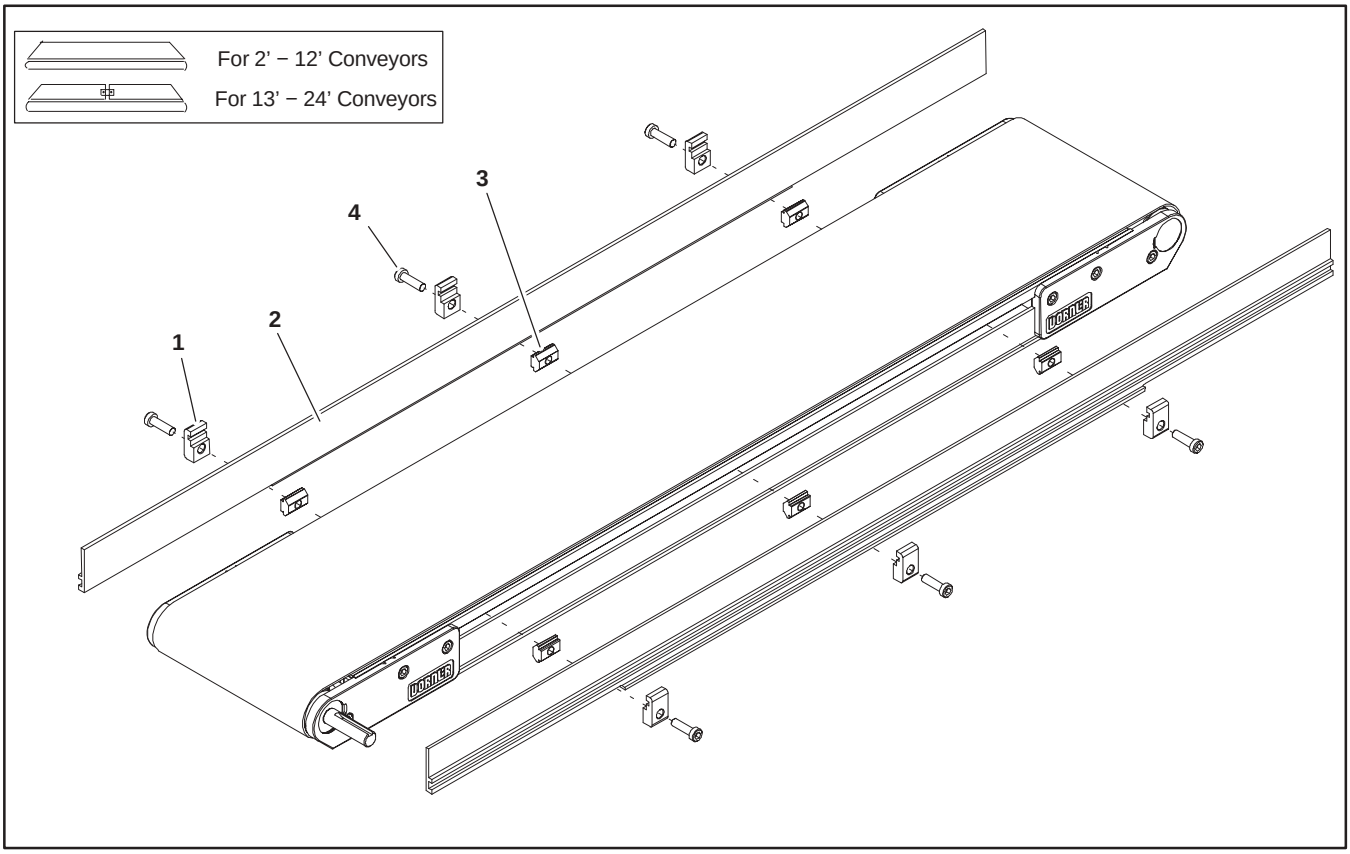

Item	Part Number	Description
1	200121	Guide Retaining Clip
2	See Chart	2200 Guide 1.5” (38mm) HS
3	639971MK10	Single Drop–in Tee Bar (x10)
4	920694M	Socket Head Screw M6 x 20mm

Item 2: 2200 Guide 1.5” (38mm) HS			
Length		End Guide	End Guide
2’ (610mm)	Left Hand	280503–02400	N/A
	Right hand	280503–02400	N/A
3’ (914mm)	Left Hand	280503–03600	N/A
	Right hand	280503–03600	N/A
4’ (1219mm)	Left Hand	280503–04800	N/A
	Right hand	280503–04800	N/A
5’ (1524mm)	Left Hand	280503–06000	N/A
	Right hand	280503–06000	N/A
6’ (1829mm)	Left Hand	280503–07200	N/A
	Right hand	280503–07200	N/A
7’ (2134mm)	Left Hand	280503–08400	N/A
	Right hand	280503–08400	N/A
8’ (2438mm)	Left Hand	280503–09600	N/A
	Right hand	280503–09600	N/A
9’ (2743mm)	Left Hand	280503–10800	N/A
	Right hand	280503–10800	N/A
10’ (3048mm)	Left Hand	280503–12000	N/A
	Right hand	280503–12000	N/A
11’ (3353mm)	Left Hand	280503–13200	N/A
	Right hand	280503–13200	N/A

Item 2: 2200 Guide 1.5” (38mm) HS			
Length		End Guide	End Guide
12’ (3658mm)	Left Hand	280503–14400	N/A
	Right hand	280503–14400	N/A
13’ (3962mm)	Left Hand	280501–07500	280501–08100
	Right hand	280502–07500	280502–08100
14’ (4267mm)	Left Hand	280501–07500	280501–09300
	Right hand	280502–07500	280502–09300
15’ (4572mm)	Left Hand	280501–07500	280501–10500
	Right hand	280502–07500	280502–10500
16’ (4877mm)	Left Hand	280501–07500	280501–11700
	Right hand	280502–07500	280502–11700
17’ (5182mm)	Left Hand	280501–07500	280501–12900
	Right hand	280502–07500	280502–12900
18’ (5486mm)	Left Hand	280501–07500	280501–14100
	Right hand	280502–07500	280502–14100
19’ (5791mm)	Left Hand	280501–14700	280501–08100
	Right hand	280502–14700	280502–08100
20’ (6096mm)	Left Hand	280501–14700	280501–09300
	Right hand	280502–14700	280502–09300
21’ (6401mm)	Left Hand	280501–14700	280501–10500
	Right hand	280502–14700	280502–10500
22’ (6706mm)	Left Hand	280501–14700	280501–11700
	Right hand	280502–14700	280502–11700
23’ (7010mm)	Left Hand	280501–14700	280501–12900
	Right hand	280501–14700	280502–12900
24’ (7315mm)	Left Hand	280501–14700	280501–14100
	Right hand	280502–14700	280502–14100

Service Parts

–07 Low to Side Wiper

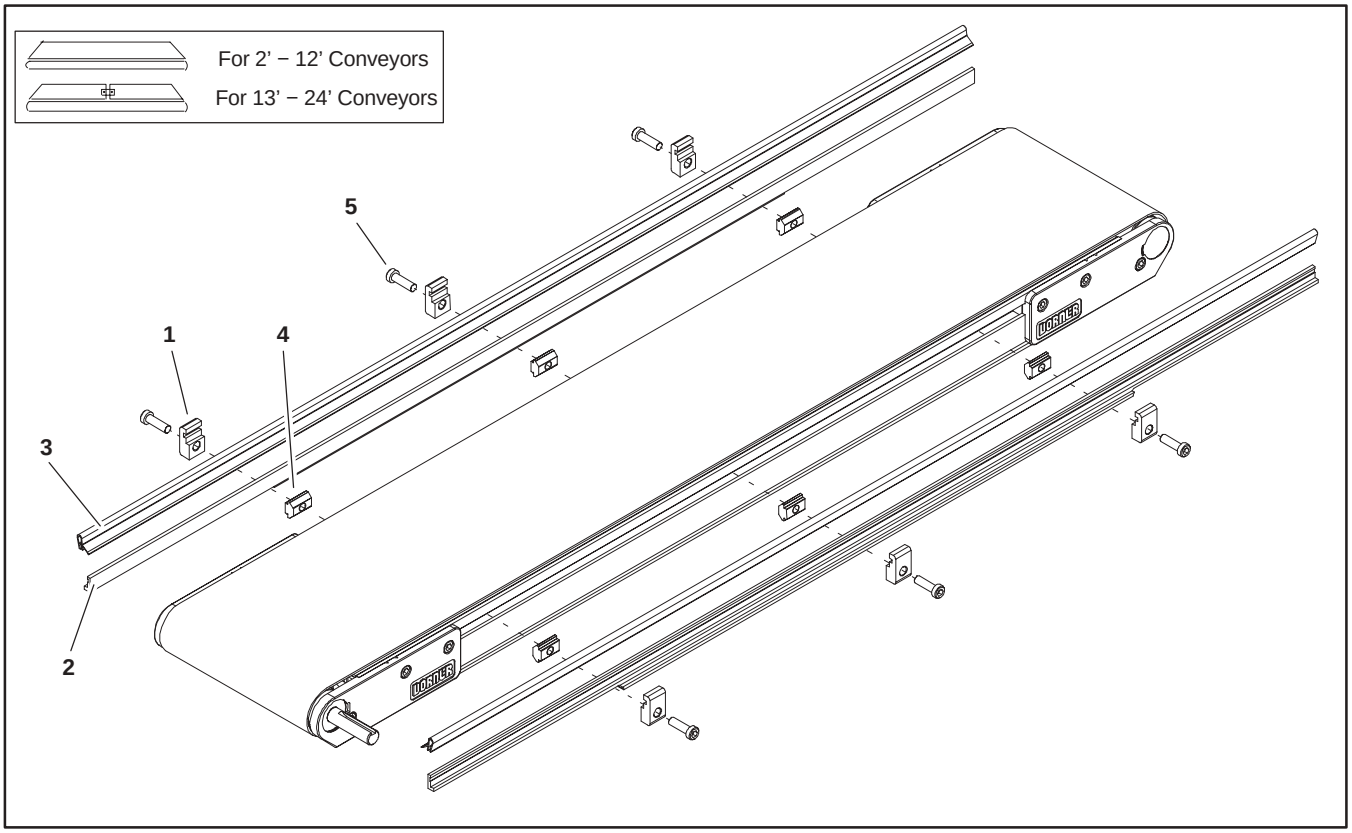

Item	Part Number	Description
1	200121	Guide Retaining Clip
2	See Chart	2200 Guide, 0.5” (13 mm) HS
3	41–00–24	Side Wiper Nylatron (per foot)
4	639971MK10	Single Drop–in Tee Bar (x10)
5	920694M	Socket Head Screw, M6 x 20 mm

Item 2: 2200 Guide 1.5” (38mm) HS			
Length		End Guide	End Guide
2’ (610mm)	Left Hand	280903–02400	N/A
	Right hand	280903–02400	N/A
3’ (914mm)	Left Hand	280903–03600	N/A
	Right hand	280903–03600	N/A
4’ (1219mm)	Left Hand	280903–04800	N/A
	Right hand	280903–04800	N/A
5’ (1524mm)	Left Hand	280903–06000	N/A
	Right hand	280903–06000	N/A
6’ (1829mm)	Left Hand	280903–07200	N/A
	Right hand	280903–07200	N/A
7’ (2134mm)	Left Hand	280903–08400	N/A
	Right hand	280903–08400	N/A
8’ (2438mm)	Left Hand	280903–09600	N/A
	Right hand	280903–09600	N/A
9’ (2743mm)	Left Hand	280903–10800	N/A
	Right hand	280903–10800	N/A
10’ (3048mm)	Left Hand	280903–12000	N/A
	Right hand	280903–12000	N/A
11’ (3353mm)	Left Hand	280903–13200	N/A
	Right hand	280903–13200	N/A

Item 2: 2200 Guide 1.5” (38mm) HS			
Length		End Guide	End Guide
12’ (3658mm)	Left Hand	280903–14400	N/A
	Right hand	280903–14400	N/A
13’ (3962mm)	Left Hand	280901–07500	280901–08100
	Right hand	280902–07500	280902–08100
14’ (4267mm)	Left Hand	280901–07500	280901–09300
	Right hand	280902–07500	280902–09300
15’ (4572mm)	Left Hand	280901–07500	280901–10500
	Right hand	280902–07500	280902–10500
16’ (4877mm)	Left Hand	280901–07500	280901–11700
	Right hand	280902–07500	280902–11700
17’ (5182mm)	Left Hand	280901–07500	280901–12900
	Right hand	280902–07500	280902–12900
18’ (5486mm)	Left Hand	280901–07500	280901–14100
	Right hand	280902–07500	280902–14100
19’ (5791mm)	Left Hand	280901–14700	280901–08100
	Right hand	280902–14700	280902–08100
20’ (6096mm)	Left Hand	280901–14700	280901–09300
	Right hand	280902–14700	280902–09300
21’ (6401mm)	Left Hand	280901–14700	280901–10500
	Right hand	280902–14700	280902–10500
22’ (6706mm)	Left Hand	280901–14700	280901–11700
	Right hand	280902–14700	280902–11700
23’ (7010mm)	Left Hand	280901–14700	280901–12900
	Right hand	280902–14700	280902–12900
24’ (7315mm)	Left Hand	280901–14700	280901–14100
	Right hand	280902–14700	280902–14100

–09 Low to High Side

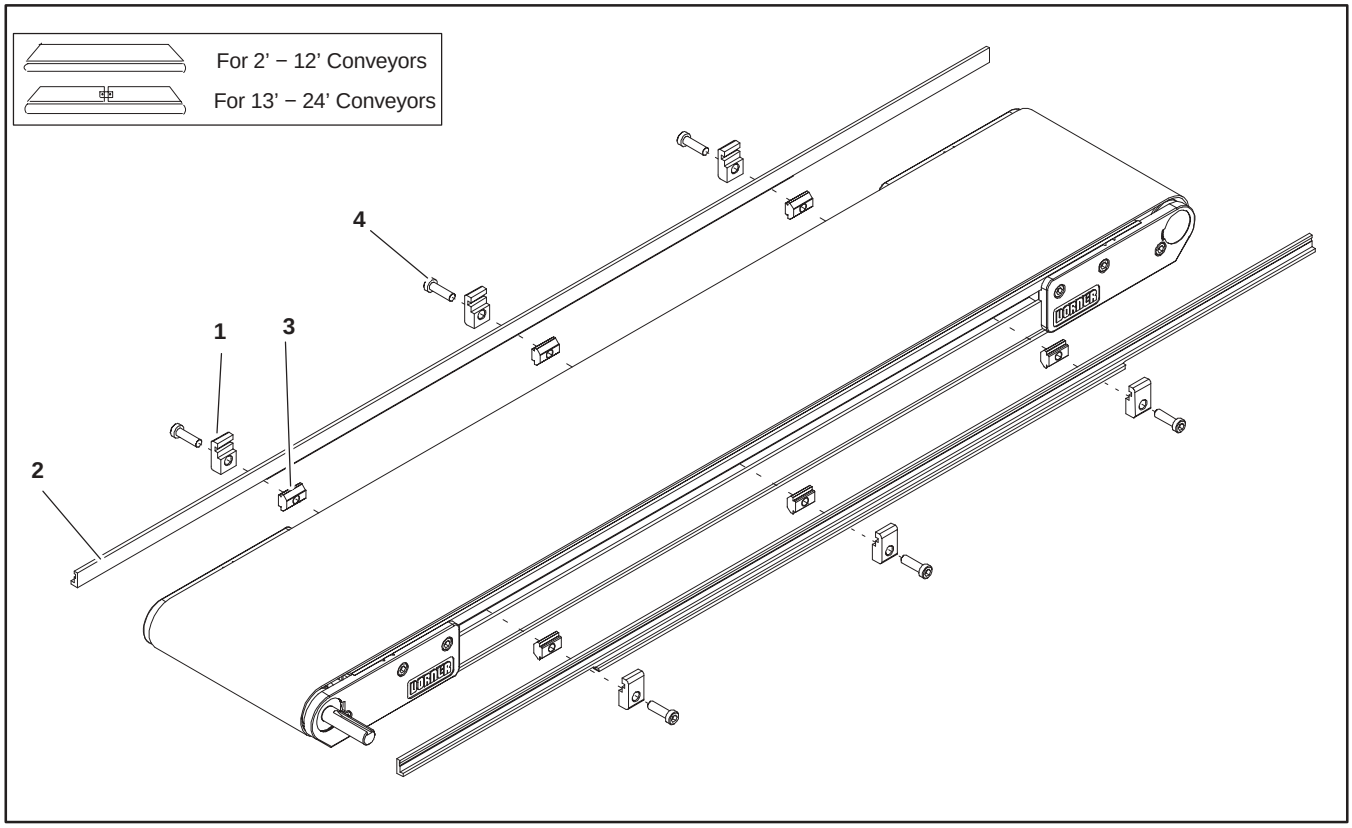

Item	Part Number	Description
1	200121	Guide Retaining Clip
2	See Chart	2200 Guide, 0.5” (13 mm) HS
3	639971MK10	Single Drop–in Tee Bar (x10)
4	920694M	Socket Head Screw, M6 x 20 mm

Item 2: 2200 Guide 1.5” (38mm) HS			
Length		End Guide	End Guide
2’ (610mm)	Left Hand	280903–02400	N/A
	Right hand	280903–02400	N/A
3’ (914mm)	Left Hand	280903–03600	N/A
	Right hand	280903–03600	N/A
4’ (1219mm)	Left Hand	280903–04800	N/A
	Right hand	280903–04800	N/A
5’ (1524mm)	Left Hand	280903–06000	N/A
	Right hand	280903–06000	N/A
6’ (1829mm)	Left Hand	280903–07200	N/A
	Right hand	280903–07200	N/A
7’ (2134mm)	Left Hand	280903–08400	N/A
	Right hand	280903–08400	N/A
8’ (2438mm)	Left Hand	280903–09600	N/A
	Right hand	280903–09600	N/A
9’ (2743mm)	Left Hand	280903–10800	N/A
	Right hand	280903–10800	N/A
10’ (3048mm)	Left Hand	280903–12000	N/A
	Right hand	280903–12000	N/A
11’ (3353mm)	Left Hand	280903–13200	N/A
	Right hand	280903–13200	N/A

Item 2: 2200 Guide 1.5” (38mm) HS			
Length		End Guide	End Guide
12’ (3658mm)	Left Hand	280903–14400	N/A
	Right hand	280903–14400	N/A
13’ (3962mm)	Left Hand	280901–07500	280901–08100
	Right hand	280902–07500	280902–08100
14’ (4267mm)	Left Hand	280901–07500	280901–09300
	Right hand	280902–07500	280902–09300
15’ (4572mm)	Left Hand	280901–07500	280901–10500
	Right hand	280902–07500	280902–10500
16’ (4877mm)	Left Hand	280901–07500	280901–11700
	Right hand	280902–07500	280902–11700
17’ (5182mm)	Left Hand	280901–07500	280901–12900
	Right hand	280902–07500	280902–12900
18’ (5486mm)	Left Hand	280901–07500	280901–14100
	Right hand	280902–07500	280902–14100
19’ (5791mm)	Left Hand	280901–14700	280901–08100
	Right hand	280902–14700	280902–08100
20’ (6096mm)	Left Hand	280901–14700	280901–09300
	Right hand	280902–14700	280902–09300
21’ (6401mm)	Left Hand	280901–14700	280901–10500
	Right hand	280902–14700	280902–10500
22’ (6706mm)	Left Hand	280901–14700	280901–11700
	Right hand	280902–14700	280902–11700
23’ (7010mm)	Left Hand	280901–14700	280901–12900
	Right hand	280902–14700	280902–12900
24’ (7315mm)	Left Hand	280901–14700	280901–14100
	Right hand	280902–14700	280902–14100

Service Parts

–10.5” (13 mm) Extruded Plastic

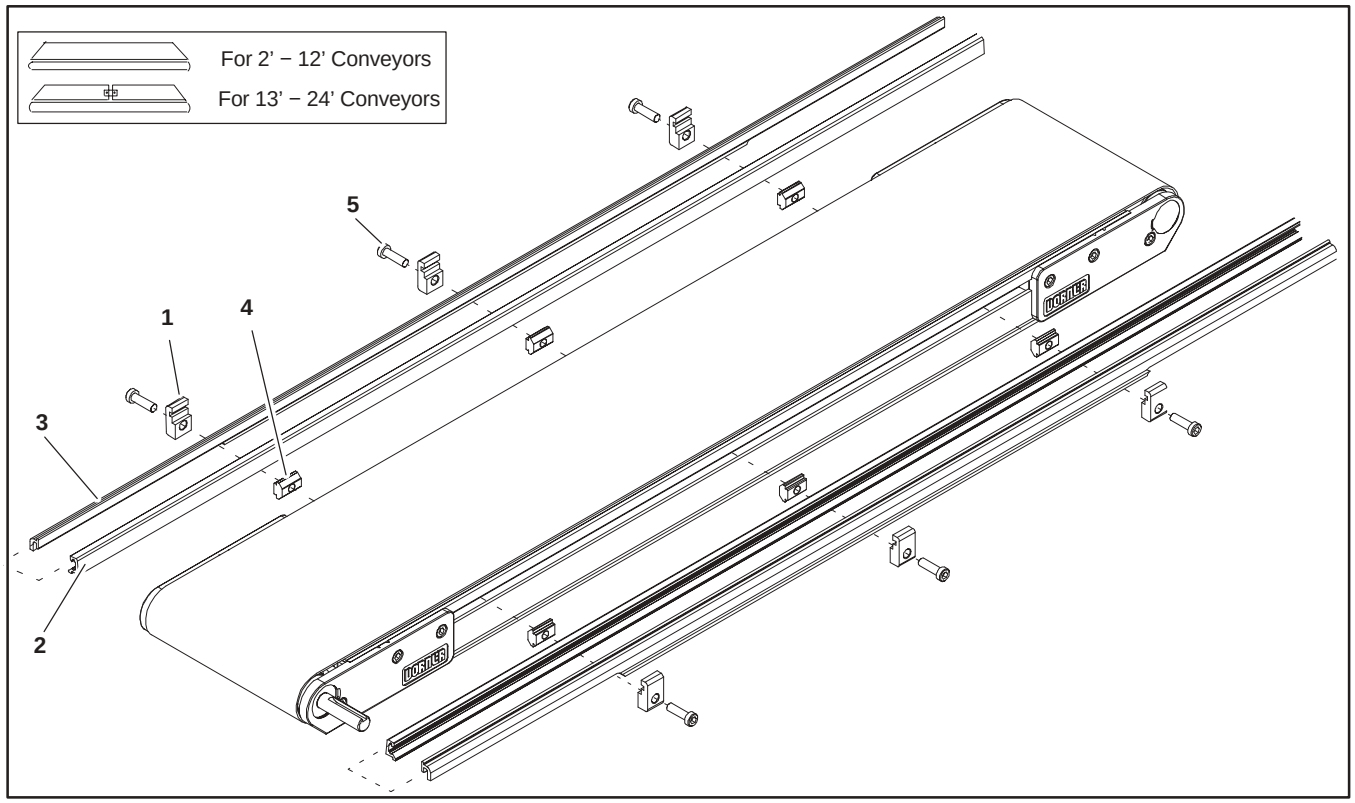

Item	Part Number	Description
1	200121	Guide Retaining Clip
2	200054P	Snap–On Guide (per foot)
3	See Chart	2200 Guide
4	639971MK10	Single Drop–in Tee Bar (x10)
5	920694M	Socket Head Screw, M6 x 20 mm

Item 2: 2200 Guide 1.5” (38mm) HS			
Length		End Guide	End Guide
2’ (610mm)	Left Hand	281003–02400	N/A
	Right hand	281003–02400	N/A
3’ (914mm)	Left Hand	281003–03600	N/A
	Right hand	281003–03600	N/A
4’ (1219mm)	Left Hand	281003–04800	N/A
	Right hand	281003–04800	N/A
5’ (1524mm)	Left Hand	281003–06000	N/A
	Right hand	281003–06000	N/A
6’ (1829mm)	Left Hand	281003–07200	N/A
	Right hand	281003–07200	N/A
7’ (2134mm)	Left Hand	281003–08400	N/A
	Right hand	281003–08400	N/A
8’ (2438mm)	Left Hand	281003–09600	N/A
	Right hand	281003–09600	N/A
9’ (2743mm)	Left Hand	281003–10800	N/A
	Right hand	281003–10800	N/A
10’ (3048mm)	Left Hand	281003–12000	N/A
	Right hand	281003–12000	N/A
11’ (3353mm)	Left Hand	281003–13200	N/A
	Right hand	281003–13200	N/A

Item 2: 2200 Guide 1.5” (38mm) HS			
Length		End Guide	End Guide
12’ (3658mm)	Left Hand	281003–14400	N/A
	Right hand	281003–14400	N/A
13’ (3962mm)	Left Hand	281001–07500	280901–08100
	Right hand	281002–07500	280902–08100
14’ (4267mm)	Left Hand	281001–07500	280901–09300
	Right hand	281002–07500	280902–09300
15’ (4572mm)	Left Hand	281001–07500	280901–10500
	Right hand	281002–07500	280902–10500
16’ (4877mm)	Left Hand	281001–07500	280901–11700
	Right hand	281002–07500	280902–11700
17’ (5182mm)	Left Hand	281001–07500	280901–12900
	Right hand	281002–07500	280902–12900
18’ (5486mm)	Left Hand	281001–07500	280901–14100
	Right hand	281002–07500	280902–14100
19’ (5791mm)	Left Hand	281001–14700	280901–08100
	Right hand	281002–14700	280902–08100
20’ (6096mm)	Left Hand	281001–14700	280901–09300
	Right hand	281002–14700	280902–09300
21’ (6401mm)	Left Hand	281001–14700	280901–10500
	Right hand	281002–14700	280902–10500
22’ (6706mm)	Left Hand	281001–14700	280901–11700
	Right hand	281002–14700	280902–11700
23’ (7010mm)	Left Hand	281001–14700	280901–12900
	Right hand	281002–14700	280902–12900
24’ (7315mm)	Left Hand	281001–14700	280901–14100
	Right hand	281002–14700	280902–14100

–13 Adjustable Guiding

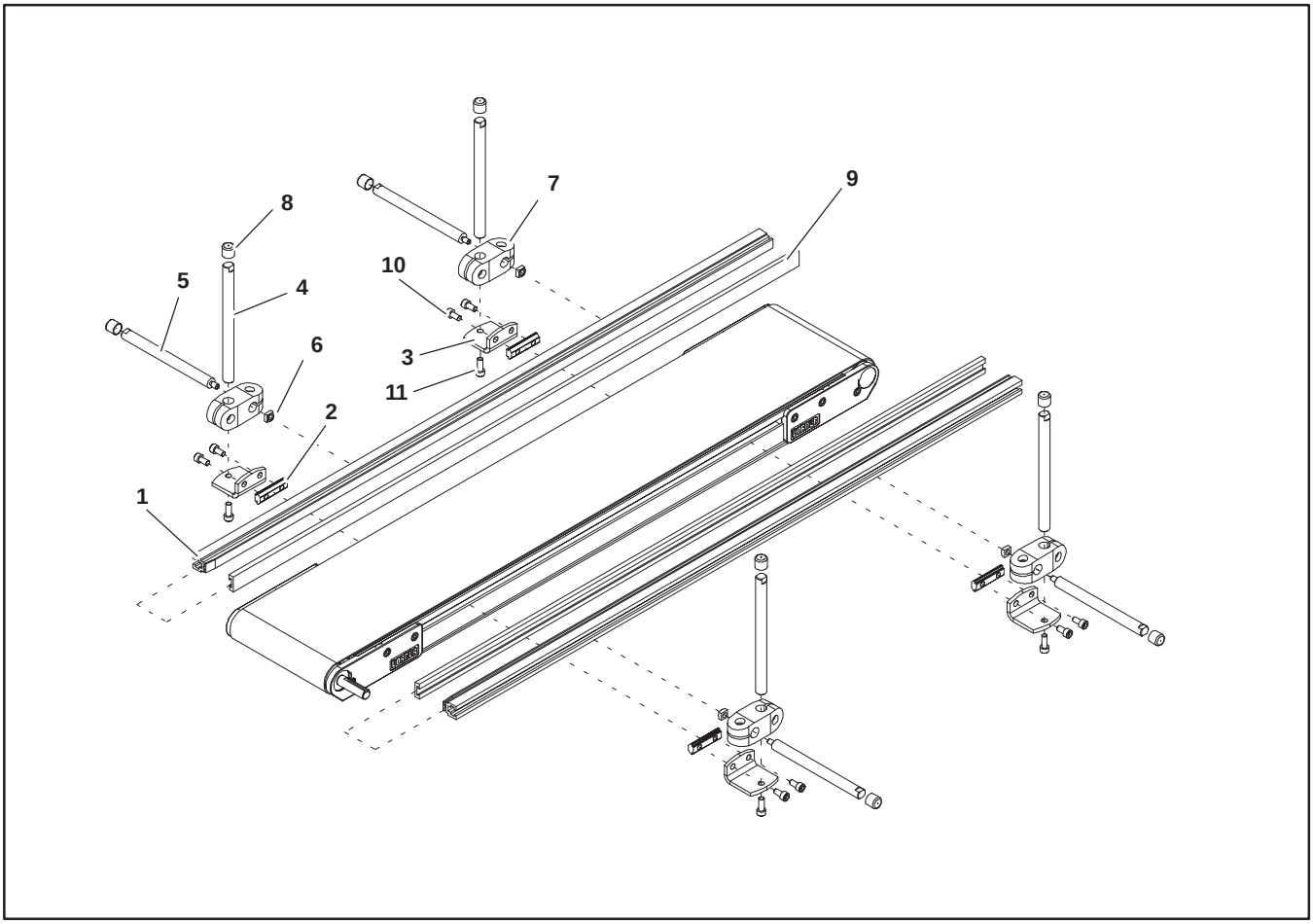

Item	Part Number	Description
1	202983	Aluminum Profile Guide 2’ (610mm)
	202984	Aluminum Profile Guide 3’ (914mm)
	202985	Aluminum Profile Guide 4’ (1219mm)
	202986	Aluminum Profile Guide 5’ (1524mm)
	202987	Aluminum Profile Guide 6’ (1829mm)
	202988	Aluminum Profile Guide 7’ (2134mm)
	202989	Aluminum Profile Guide 8’ (2438mm)
	202990	Aluminum Profile Guide 9’ (2743mm)
	202991	Aluminum Profile Guide 10’ (3048mm)
	202992	Aluminum Profile Guide 11’ (3353mm)
	202993	Aluminum Profile Guide 12’ (3658mm)
	202994	Aluminum Profile Guide 13’ (3962mm)
2	200830M	Drop–In Tee Bar
3	202004	Mounting Bracket
4	202027M	Guide Mounting Shaft Vertical
5	202028M	Guide Mounting Shaft Horizontal
6	674175MP	Square Nut
7	807–652	Cross Block
8	807–948	Vinyl Shaft Cap
9	614068P	Flat Extruded Guide (per foot)
10	920612M	Socket Head Screw M6 x 12mm
11	920616M	Socket Head Screw M6 x 16mm

–14 Tool-Less Adjustable Guiding

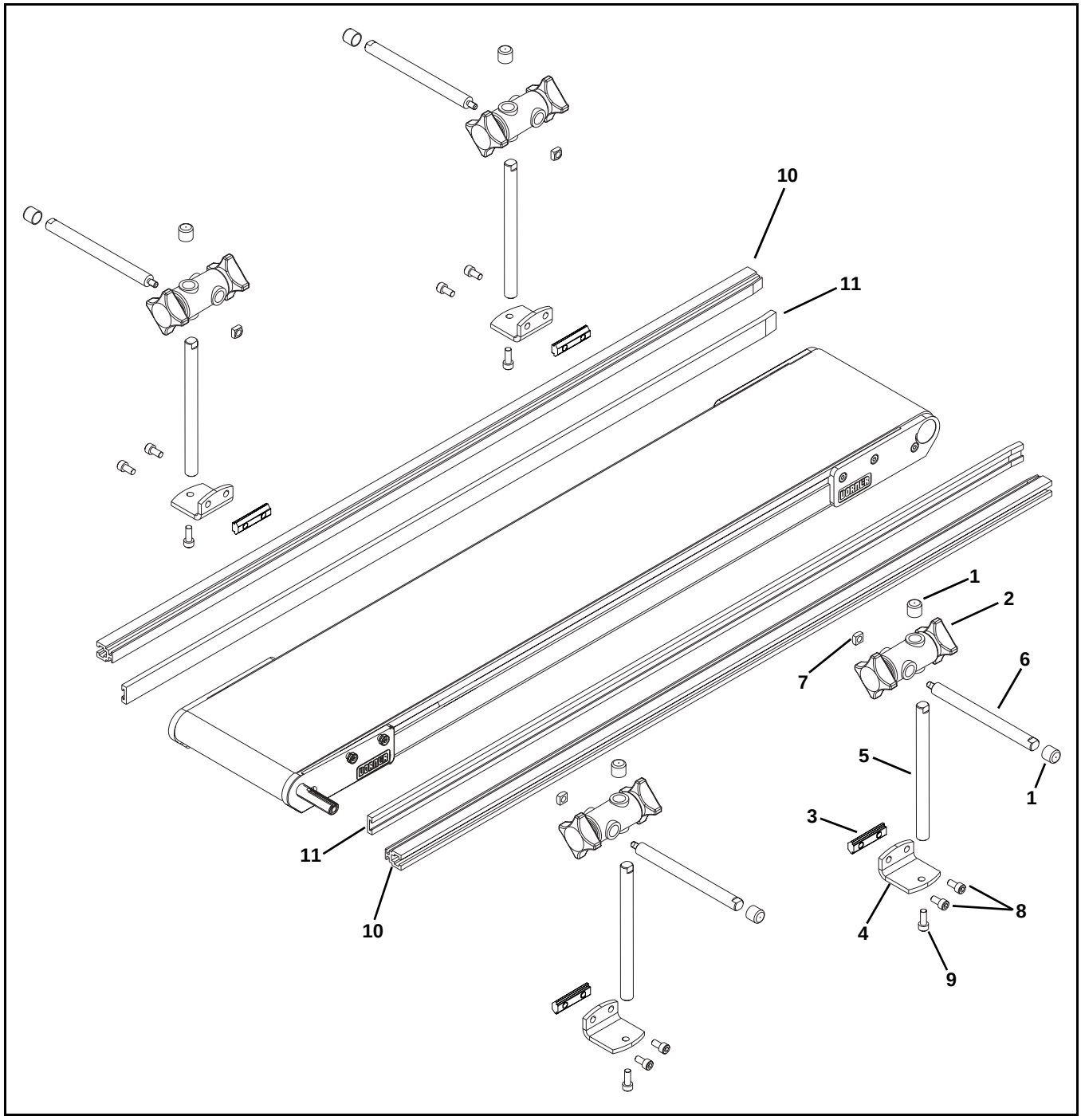

Item	Part Number	Description
1	807-948	Shaft Cap
2	807-1470	Cross Block
3	200830M	Drop-In Tee Bar
4	202004M	Mounting Bracket
5	202027M	Vertical Mounting Guide Shaft
6	202028M	Horizontal Mounting Guide Shaft

Item	Part Number	Description
7	674175MP	Square Nut, M6-1.00
8	920612M	Socket Head Screw, M6-1.00 x 12 mm
9	920616M	Socket Head Screw, M6-1.00 x 16 mm
10	460063-LLLLL	Aluminum Profile Guide
11	614068P-LLLLL	Extruded Guide
LLLLL = Length in inches with 2 decimal places.		
Length Example: Length = 95.25" LLLLL = 09525		

Flared Side Guiding

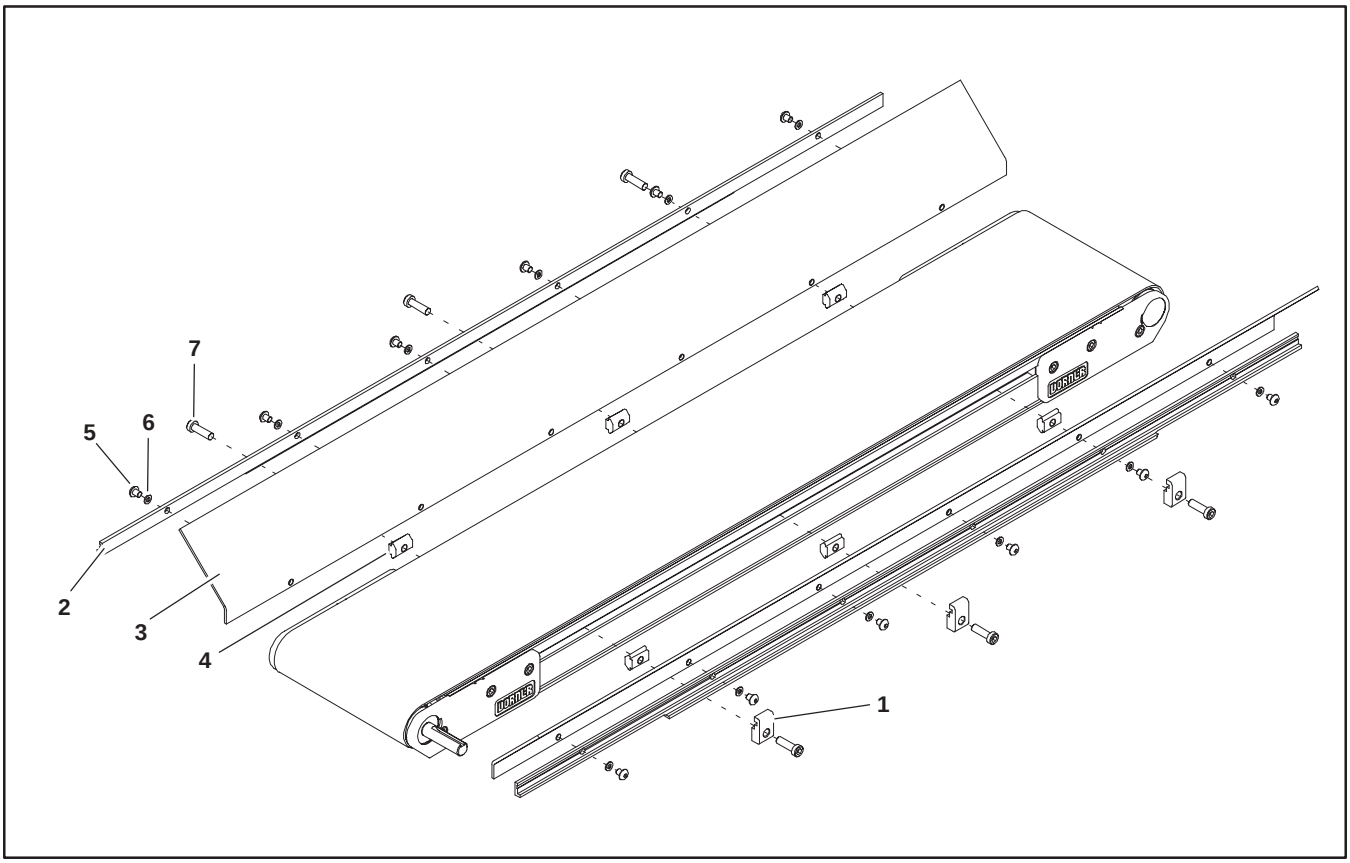

Item	Part Number	Description
1	200121	Guide Retaining Clip
2	202212	Side–Flare Mounting Guide 2’ (610mm)
	202213	Side–Flare Mounting Guide 3’ (914mm)
	202214	Side–Flare Mounting Guide 4’ (1219mm)
	202215	Side–Flare Mounting Guide 5’ (1524mm)
	202216	Side–Flare Mounting Guide 6’ (1829mm)

Item	Part Number	Description
3	202522M	Flared Guide 45º 2’ (610mm)
	202523M	Flared Guide 45º 3’ (914mm)
	202523M	Flared Guide 45º 4’ (1219mm)
	202523M	Flared Guide 45º 5’ (1524mm)
	202523M	Flared Guide 45º 6’ (1829mm)
4	639971M	Drop–In Tee Bar Button
5	910506M	Head Screw M5 x 6mm
6	911–512	Washer
7	920694M	Cap Low–Head Screw M6 x 20mm

Service Parts

Flat Belt Stand Mount Assembly

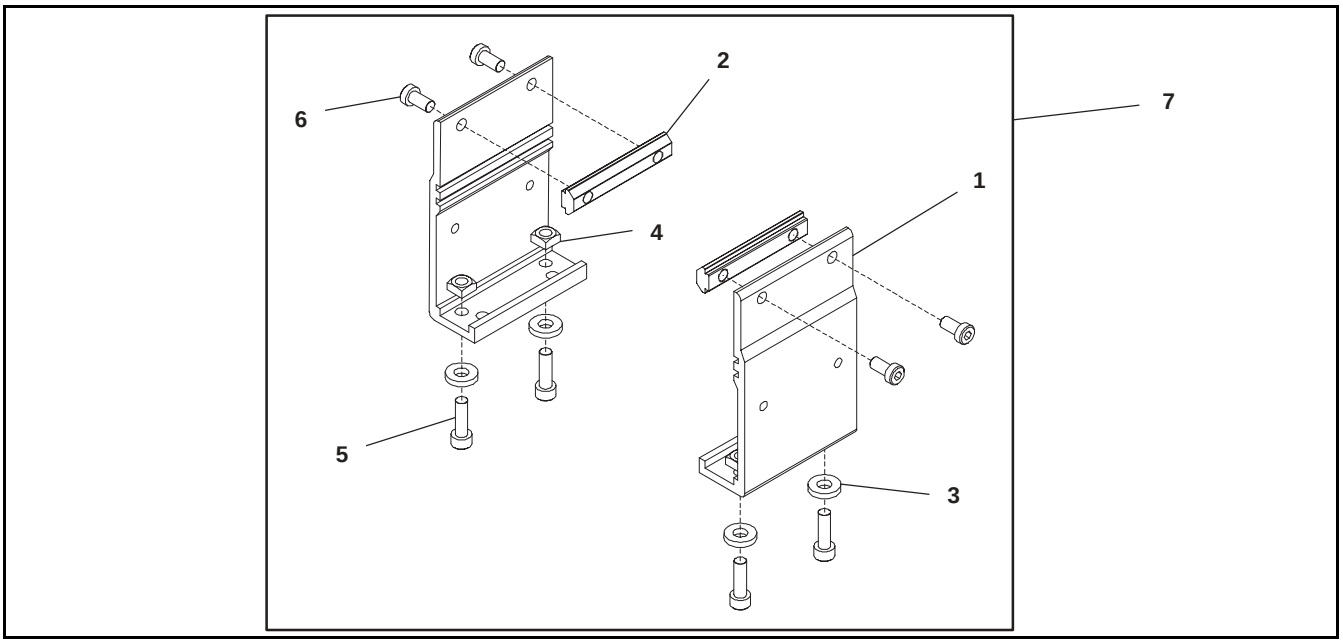

Item	Part Number	Description
1	240831	Stand Mount
2	300150MK4	Drop–In Tee Bar (x4)
3	605279P	Washer
4	807–920	Square Nut M6

Item	Part Number	Description
5	920620M	Socket Head Screw M6 x 20mm
6	920692M	Socket Low Head Screw M6x12mm
7	240839	Flat Belt Stand Mount Assembly

Flat Belt Stand Mount Assembly for 2’ (610 mm) Conveyors

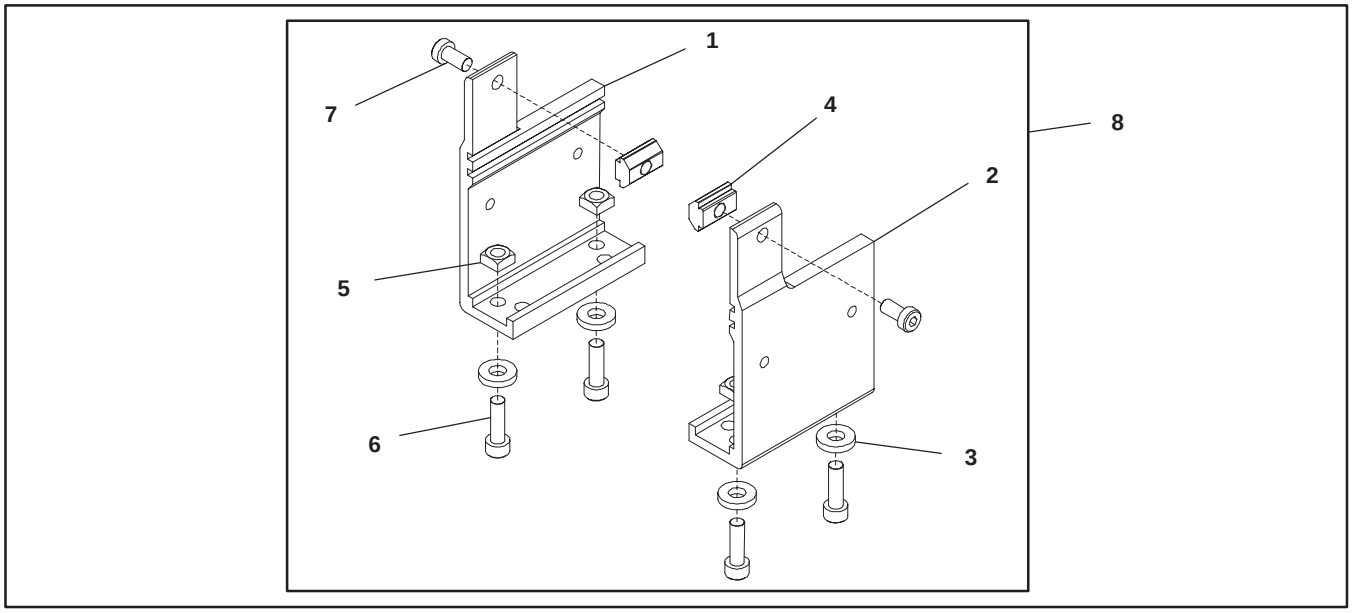

Item	Part Number	Description
1	240833	Stand Mount, LH 2’ (610mm)
2	240834	Stand Mount, RH 2’ (610mm)
3	605279P	Washer
4	639971MK10	Drop–In Tee Bar (x10)

Item	Part Number	Description
5	807–920	Square Nut M6
6	920620M	Socket Head Screw M6 x 20mm
7	920692M	Socket Low Head Screw M6x12mm
8	240847	Flat Belt Stand Mount Assembly for 2’ (610mm) Conveyors

Flat Belt Stand Mounts Assembled to the Tail

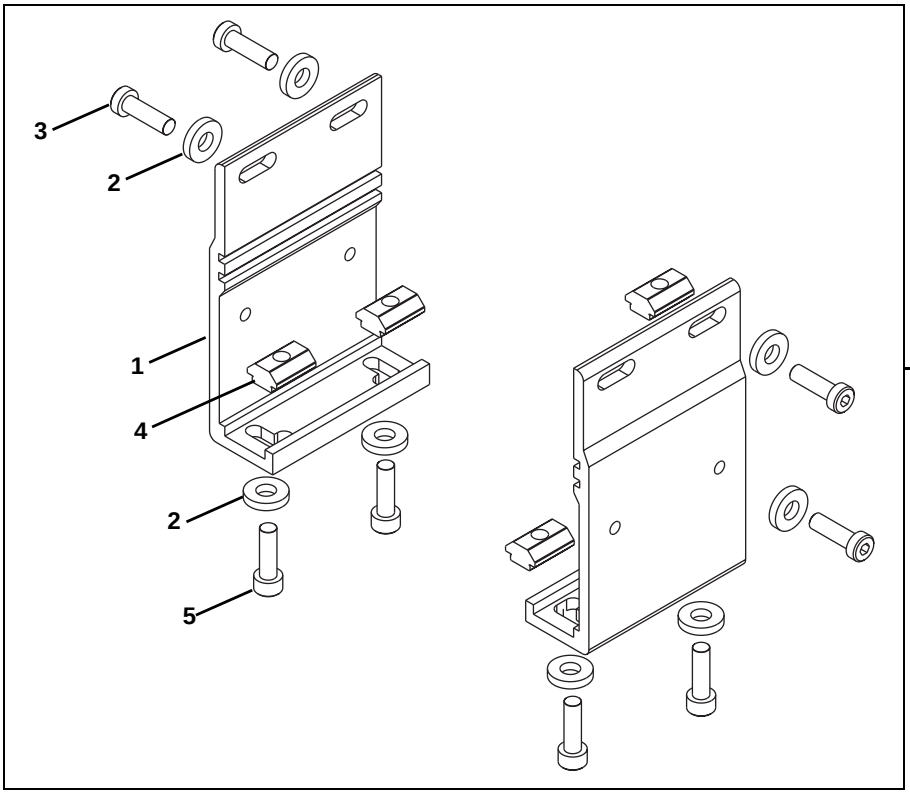

Item	Part Number	Description
1	240850	Stand Mount
2	605279P	Washer
3	920695M	Socket Low Head Screw M6x20 mm

Item	Part Number	Description
4	639971MK10	Drop–In Tee Bar (x10)
5	920620M	Socket Head Screw M6 x 20mm
6	240854	Flat Belt Stand Mount Assembly for Tail Mounts

Connecting Assembly without Stand Mount

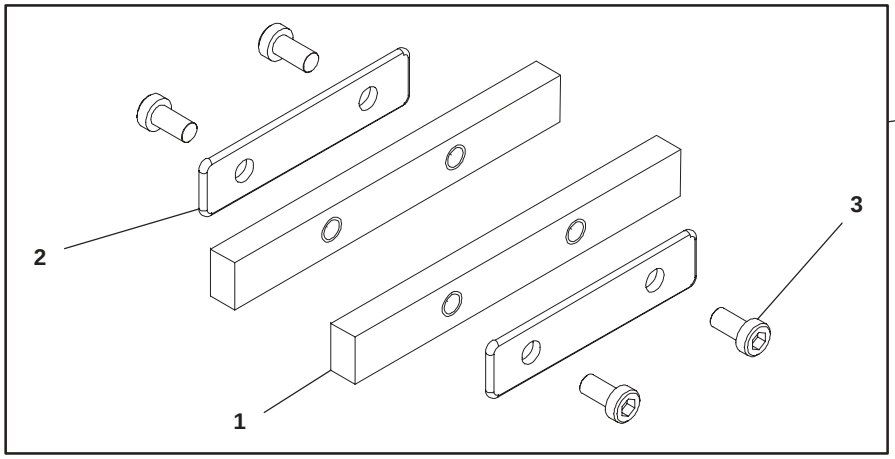

Item	Part Number	Description
1	240858	Frame Connector Bar
2	240859	Frame Connector Plate

Item	Part Number	Description
3	920692M	Socket Low Head Screw M6x12mm
4	240861	Connecting Assembly without Stand Mounts

Service Parts

Flat Belt Connecting Assembly with Stand Mount

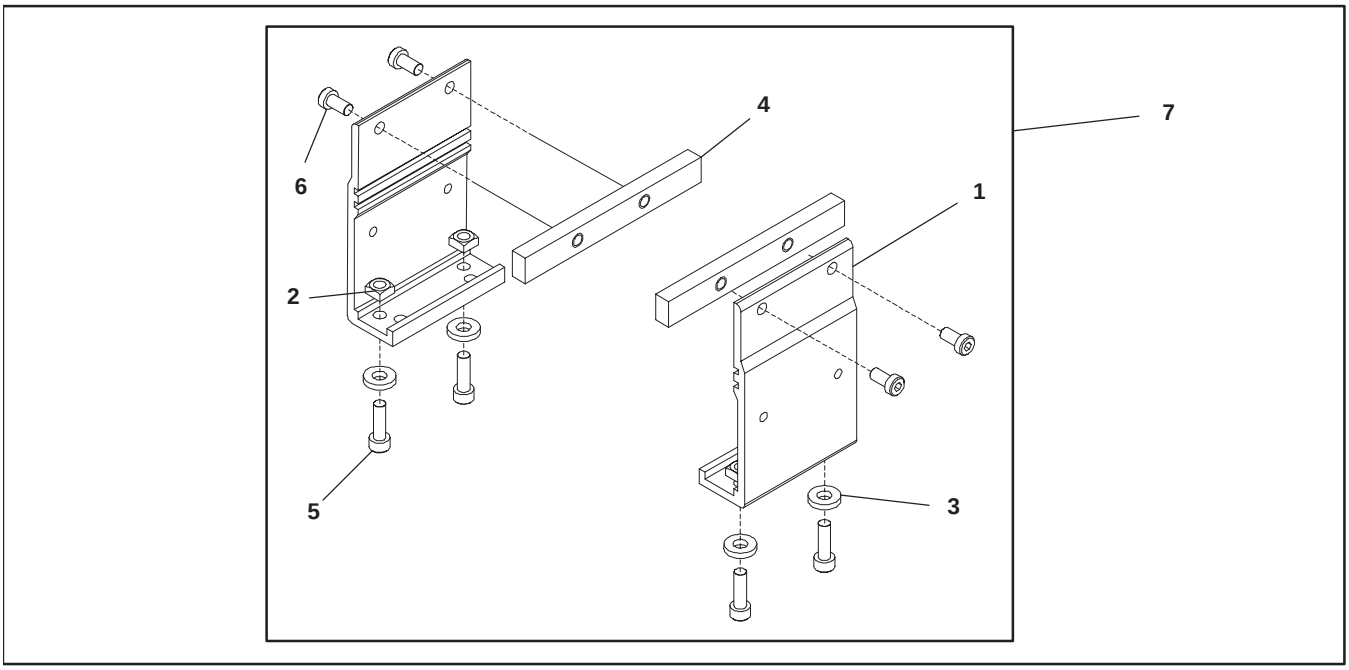

Item	Part Number	Description
1	240831	Stand Mount
2	807–920	Square Nut M6 5mm x 10mm
3	605279P	Washer
4	240858	Frame Connector Bar

Item	Part Number	Description
5	920620M	Socket Head Screw M6 x 20mm
6	920693M	Socket Low Head Screw M6 x 16mm
7	240860	Flat Belt Connecting Assembly with Stand Mounts

2” (51 mm) to 6” (152 mm) Flat Belt Return Roller

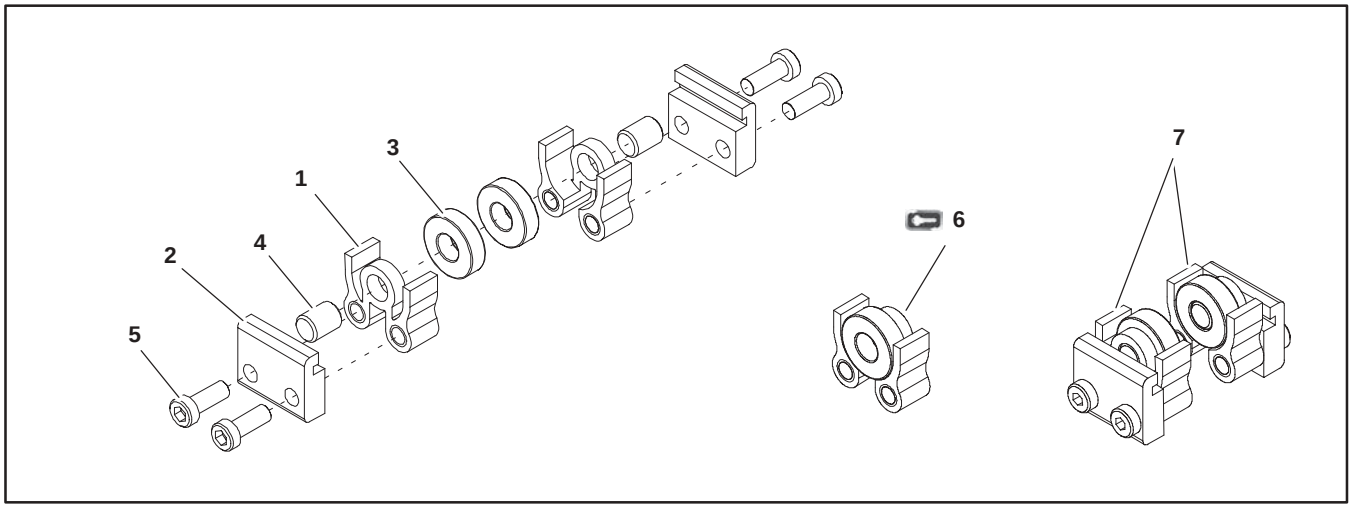

Item	Part Number	Description
1	240825	Return Roller Guard – Short
2	240827	Return Roller Clip
3	802–027	Bearing
4	913–100	Dowel Pin

Item	Part Number	Description
5	920693M	Socket Low Head Screw M6 x 16mm
6	240840	Roller Assembly (Includes Items 1, 3 and 4)
7	240830	2” (51mm) to 6” (152mm) Flat Belt Return Roller Assy

8” (203 mm) to 24” (610 mm) Flat Belt Return Roller

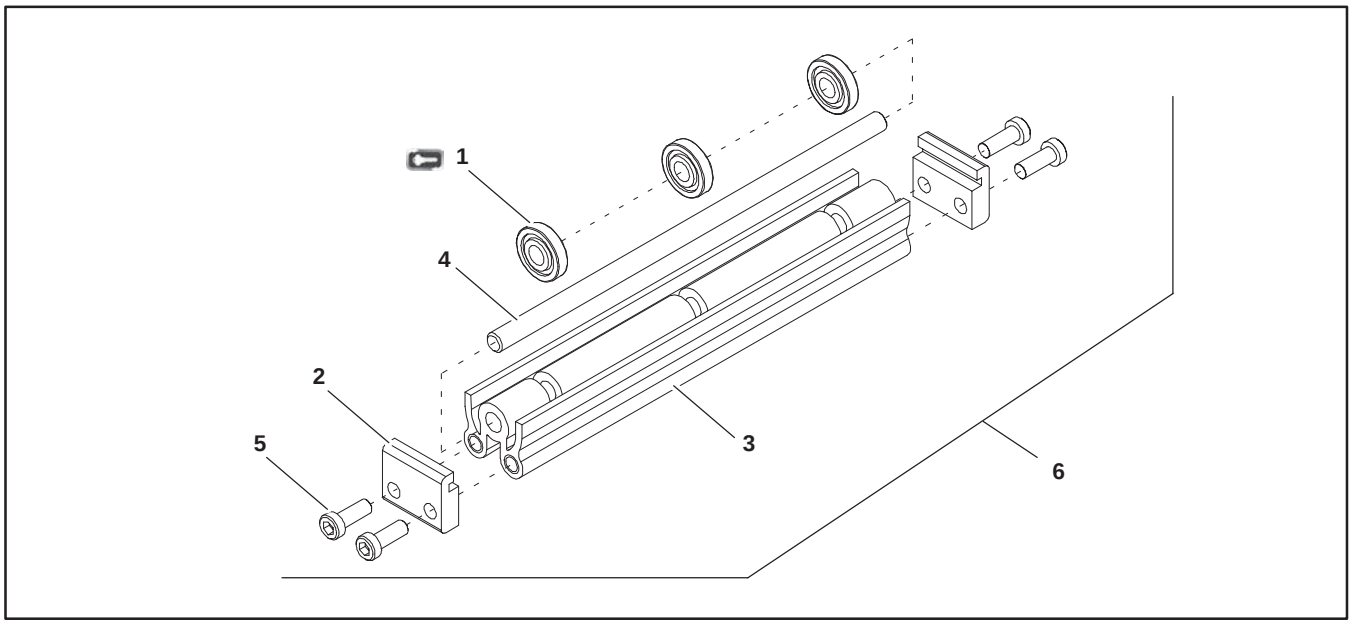

Item	Part Number	Description
1	240826	Return Roller
2	240827	Return Roller Clip
3	2409WW	Return Roller Guard
4	2410WW	Return Roller Rod

Item	Part Number	Description
5	920693M	Socket Low Head Screw M6 x 16mm
6	2408WW	8” (203mm) to 24” (610mm) Flat Belt Return Roller Assembly
WW= Conveyor width ref.: 02, 03, 04, 05, 06, 08, 10, 12, 18, 21, 24		

Conveyor Belt Part Number Configuration

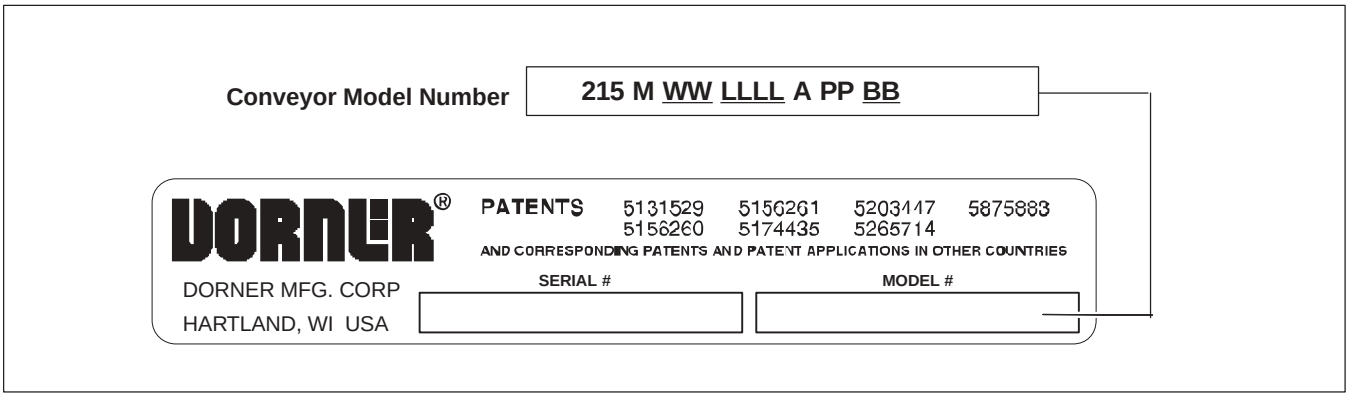

Figure 65

Refer to Dorner patent plate **(Figure 65)**. From the model number, determine conveyor width (“WW”), length (“LLLL”) and belt type (“BB”). Use data to configure belt part number as indicated below. *Add “V” for V-guided belts.

25 - WW LLLL / BB V*

25 – __ __ __ __ __ __ / __ __ V*

(Fill In)

Return Policy

Returns must have prior written factory authorization or they will not be accepted. Items that are returned to Dorner without authorization will not be credited nor returned to the original sender. When calling for authorization, please have the following information ready for the Dorner factory representative or your local distributor:

1. Name and address of customer.
2. Dorner part number(s) of item(s) being returned.
3. Reason for return.
4. Customer's original order number used when ordering the item(s).
5. Dorner or distributor invoice number (if available, part serial number).

A representative will discuss action to be taken on the returned items and provide a Returned Goods Authorization (RMA) number for reference. RMA will automatically close 30 days after being issued. To get credit, items must be new and undamaged. There will be a return charge on all items returned for credit, where Dorner was not at fault. It is the customer's responsibility to prevent damage during return shipping. Damaged or modified items will not be accepted. The customer is responsible for return freight.

<table>
<tr><th></th><th colspan="9">Product Type</th></tr>
<tr><th></th><th colspan="8">Standard Products</th><th>Engineered to order parts</th></tr>
<tr><th>Product Line</th><th>Conveyors</th><th>Gearmotors & Mounting Packages</th><th>Support Stands</th><th>Accessories</th><th>Spare Parts (non-belt)</th><th>Spare Belts - Standard Flat Fabric</th><th>Spare Belts - Cleated & Specialty Fabric</th><th>Spare Belts - Plastic Chain</th><th>All equipment and parts</th></tr>
<tr><td>1100</td><td colspan="6" rowspan="13">30% return fee for all products except:
50% return fee for conveyors with modular belt, cleated belt or specialty belts</td><td colspan="2" rowspan="13">non-returnable</td><td rowspan="13">case-by-case</td></tr>
<tr><td>2200</td></tr>
<tr><td>2200 Modular Belt</td></tr>
<tr><td>2200 Precision Move</td></tr>
<tr><td>2300</td></tr>
<tr><td>2300 Modular Belt</td></tr>
<tr><td>3200</td></tr>
<tr><td>3200 LPZ</td></tr>
<tr><td>3200 Precision Move</td></tr>
<tr><td>4100</td></tr>
<tr><td>5200</td></tr>
<tr><td>5300</td></tr>
<tr><td>6200</td></tr>
<tr><td>Controls</td></tr>
<tr><td>7200 / 7300</td><td colspan="6">50% return fee for all products</td></tr>
<tr><td>7350</td><td colspan="9" rowspan="4">non-returnable</td></tr>
<tr><td>7360</td></tr>
<tr><td>7400</td></tr>
<tr><td>7600</td></tr>
</table>

Returns will not be accepted after 60 days from original invoice date. The return charge covers inspection, cleaning, disassembly, disposal and reissuing of components to inventory. If a replacement is needed prior to evaluation of returned item, a purchase order must be issued. Credit (if any) is issued only after return and evaluation is complete.

Dorner has representatives throughout the world. Contact Dorner for the name of your local representative. Our Customer Service Team will gladly help with your questions on Dorner products.

For a copy of Dorner's Warranty, contact factory, distributor, service center or visit our website at www.dorner.com.

For replacement parts, contact an authorized Dorner Service Center or the factory.

Dorner Mfg. Corp. reserves the right to change or discontinue products without notice. All products and services are covered in accordance with our standard warranty. All rights reserved. © Dorner Mfg. Corp. 2013

DORNER MFG. CORP.
975 Cottonwood Ave., PO Box 20
Hartland, WI 53029-0020 USA
TEL 1-800-397-8664 (USA)
FAX 1-800-369-2440 (USA)
Internet: www.dorner.com

Outside the USA:
TEL 1-262-367-7600
FAX 1-262-367-5827