Installation, Maintenance & Parts Manual

2100 Series Center Drive Conveyors

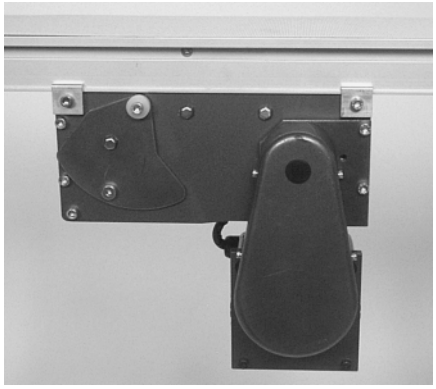

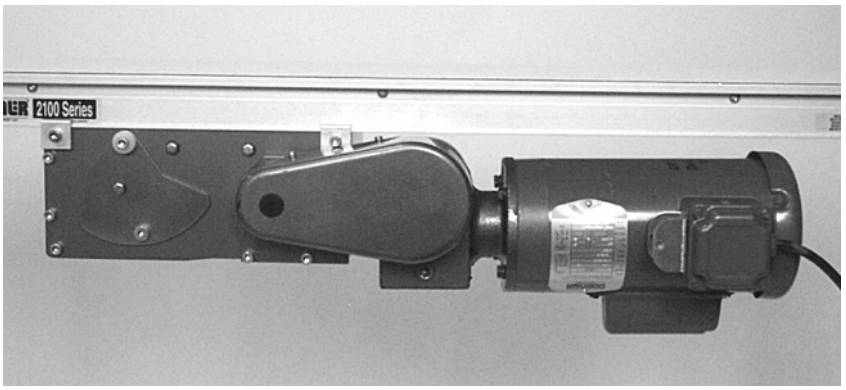

Table of Contents

Warnings – General Safety 2
Introduction 2
Product Description 3
Specifications 3
Installation 4
Required Tools 5
Standard Tools 5
Recommended Installation Sequence 5
Conveyors Up to 3962 mm 5
Conveyors Longer Than 3962 mm 5
Mounting Brackets with Return Rollers 6
44 mm to 152 mm Wide
Flat Belt Conveyors 6
Preventative Maintenance & Adjustment 7
Required Tools 7
Standard Tools 7
Special Tools 7
Checklist 7
Lubrication 7
End Pulley Bearings 7
Drive Module Idler Pulley Bearings 7
Drive Module Drive Pulley Bearings 7
Mounting Brackets with Return Rollers 7
Maintaining Conveyor Belt 8
Troubleshooting 8
Cleaning 8
Conveyor Belt Replacement 8
Conveyor Belt Replacement Sequence 8
Belt Removal for Conveyor Without
Gearmotor Mounting Package or Stands 8
Belt Removal for Conveyor With Stands
and/or Gearmotor Mounting Package 9
Center Drive Module Removal 11
Belt Removal from Center Drive Module 11
Installing a New Conveyor Belt 12
Conveyor Belt Tensioning 14
Pulley Removal 14
A – End Pulley Removal 14
B – Drive Pulley Removal 15
C – Idler Pulley Removal 15
Bearing Replacement End Pulleys 16
Bearing Removal 16
Bearing Installation 17
Bearing Replacement for Drive Pulley 18
Bearing Removal 18
Bearing Installation 18
Bearing Replacement for Idler Pulleys 18
Pulley Replacement 18
Service Parts 21
51mm Wide Conveyor Assembly 21
76mm to 152mm Wide Conveyor Assembly 23
203mm to 605mm Wide Conveyor Assembly 24
457mm to 610mm Wide Conveyor Assembly 26
127mm to 610mm Wide Center Drive Module 28
51mm, 76mm, 102mm Wide
Center Drive Module 28
–04 76mm Aluminum Side 30
–05 38mm Aluminum Side 31
–07 Low to Side Wiper 32
–09 Low to High Side 33
–10 13mm Extruded Plastic 34
–13 Adjustable Guiding 35
Flared Side Guiding 36
Connecting Assembly without Stand Mount 36
Configuring Conveyor Belt Part Number 37
Return Policy 38

851-179 Rev. D

Warnings – General Safety

WARNING

The safety alert symbol, black triangle with white exclamation, is used to alert you to potential personal injury hazards.

DANGER

Climbing, sitting, walking or riding on conveyor will cause severe injury.

KEEP OFF CONVEYORS.

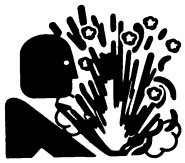

DANGER

DO NOT OPERATE CONVEYORS IN AN EXPLOSIVE ENVIRONMENT.

WARNING

Exposed moving parts can cause severe injury.

LOCK OUT POWER before removing guards or performing maintenance.

WARNING

Gearmotors may be HOT.

DO NOT TOUCH Gearmotors.

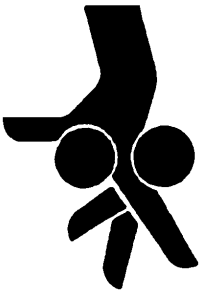

WARNING

Dorner cannot control the physical installation and application of conveyors. Taking protective measures is the responsibility of the user.

When conveyors are used in conjunction with other equipment or as part of a multiple conveyor system, CHECK FOR POTENTIAL PINCH POINTS and other mechanical hazards before system start-up.

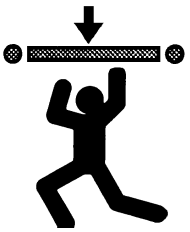

WARNING

Loosening stand height or angle adjustment screws may cause conveyor sections to drop down, causing severe injury.

SUPPORT CONVEYOR SECTIONS PRIOR TO LOOSENING STAND HEIGHT OR ANGLE ADJUSTMENT SCREWS.

Introduction

IMPORTANT: Some illustrations may show guards removed. Do NOT operate equipment without guards.

Upon receipt of shipment:

- Compare shipment with packing slip. Contact factory regarding discrepancies.
- Inspect packages for shipping damage. Contact carrier regarding damage.
- Accessories may be shipped loose. See accessory instructions for installation.

Dorner's Limited Warranty applies.

Dorner 2100 Series conveyors are covered by Patent No. 5,174,435, 5,131,529 and corresponding patents and patent applications in other countries.

Dorner reserves the right to make changes at any time without notice or obligation.

Product Description

Refer to Figure 1 for typical conveyor components.

Typical Components	
A	Conveyor
B	Center Drive Module
C	Gearmotor Mounting Package
D	Guiding & Accessories
E	Gearmotor
F	Mounting Brackets with Return Rollers
G	Support Stands
H	Variable Speed Controller
I	Fixed End
J	Tension End

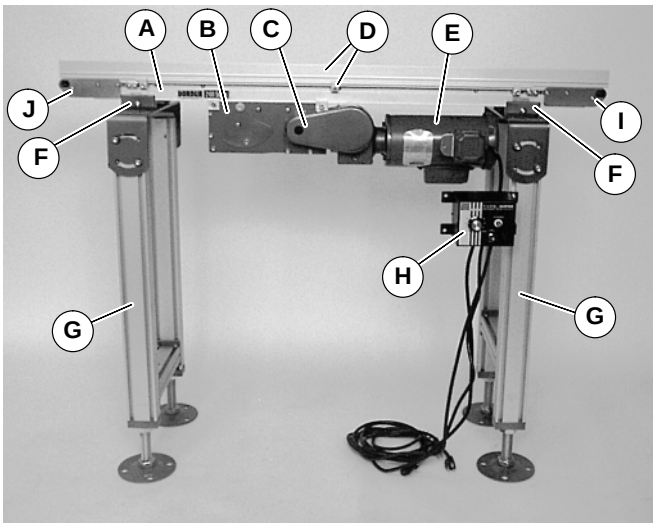

Figure 1

Specifications

Models:

2100 Series Center Drive Conveyor

2150 M WW LL A 01 / 02

- **02** — **Belt Type***
- **01** — **Conveyor Profile***
- **A** — **Mount Position (A or D)***
- **LL** — **Conveyor Length Reference**
- **WW** — **Conveyor Width Reference**

*** See "Ordering and Specifications" Catalog for details.**

Conveyor Supports:

Maximum Distances:

K = 457 mm

L = 1829 mm**

**** For conveyors longer than 3962 mm, install support at joint.**

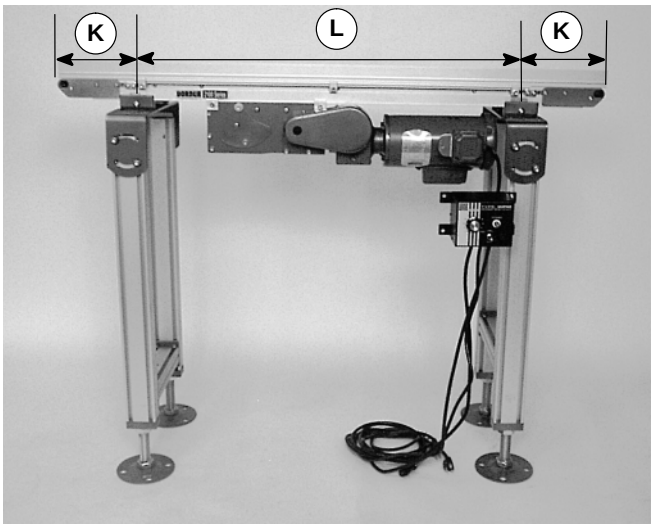

Figure 2

Specifications

Specifications:

Conveyor Width Reference (WW)	02	03	04	05	06	08	10	12
Conveyor Belt Width	44 mm	70 mm	95 mm	127 mm	152 mm	203 mm	254 mm	305 mm
Maximum Conveyor Load* (See NOTE Below)	18 kg	23 kg	27 kg	34 kg	41 kg	47 kg	54 kg	54 kg
Conveyor Start-up Torque*	1.0 Nm	1.1 Nm	1.2 Nm	1.4 Nm	1.7 Nm	2.3 Nm	2.6 Nm	2.8 Nm
Belt Travel	88 mm per revolution of pulley							
Maximum Belt Speed*	72 meters/minute							
Belt Take-up	25 mm of stroke = 51 mm of belt take-up							

Conveyor Length Reference (LL)	02	03	04	05	06	07	08	09	10	11	12	13	14	15	16	17	18	19	20	21	22	23	24
Conveyor Length	610 mm	914 mm	1219 mm	1524 mm	1829 mm	2134 mm	2438 mm	2743 mm	3048 mm	3353 mm	3658 mm	3962 mm	4267 mm	4572 mm	4877 mm	5182 mm	5486 mm	5791 mm	6096 mm	6401 mm	6706 mm	7010 mm	7315 mm

*** See "Ordering and Specifications" Catalog for details.**

NOTE: Maximum conveyor loads based on:

- **Non-accumulating product**
- **Product moving towards gearmotor**
- **Conveyor being mounted horizontal**

Installation

NOTE: Conveyor MUST be mounted straight, flat and level within confines of conveyor. Use a level (M of Figure 3) for set-up.

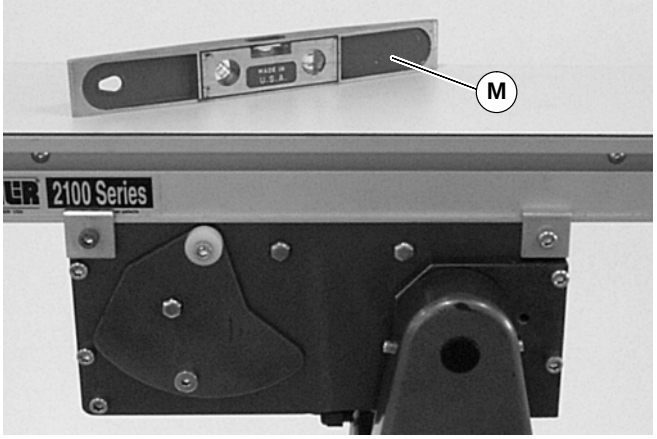

Figure 3

Installation Component List

N	Conveyor frame without belt
O	Conveyor frame with belt
P	Connector Strips (2x) (Attached to conveyor section)
Q	Mounting bracket with return roller
Z	Roller guards (2x)
AA	Mounting bracket end block (2x)

Required Tools

Standard Tools

- Hex key wrenches
  - – 4 mm
  - – 5 mm
- Level
- Torque wrench

Recommended Installation Sequence

NOTE: See Table of Contents for beginning page numbers of following procedures.

- Assemble conveyor (if required)
- Attach mounting bracket(s) with return roller to conveyor
- Install stands (see accessory instructions)
- Attach conveyor to stands
- Mount gearmotor mounting package (see accessory instructions)
- Attach guides/accessories (see accessory instructions)

Conveyors Up to 3962 mm

No additional assembly is required.

Conveyors Longer Than 3962 mm

1. Typical components (Figure 4)

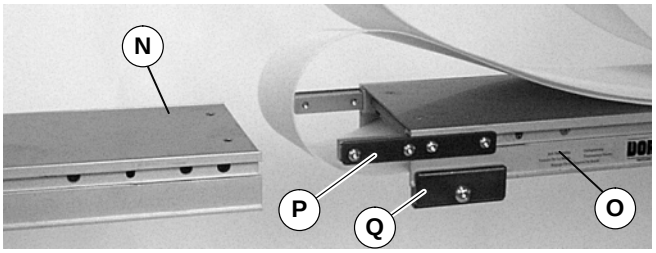

Figure 4

2. On tension end of the conveyor, identified with label (R of Figure 5), loosen tracking cam assemblies (S) and cover plate screws (T) on both sides of the conveyor.

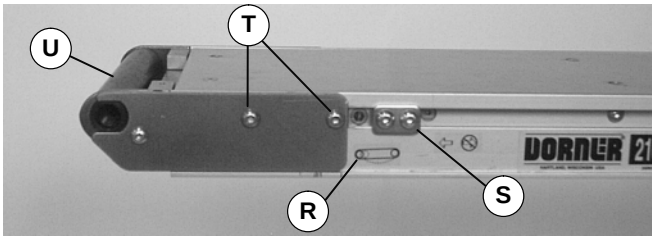

Figure 5

3. Slide the cam assemblies toward the center of the conveyor and push the end (U of Figure 5) into the conveyor frame.
4. Roll out conveyor belt.
5. Place conveyor frame (N of Figure 6) into belt loop.

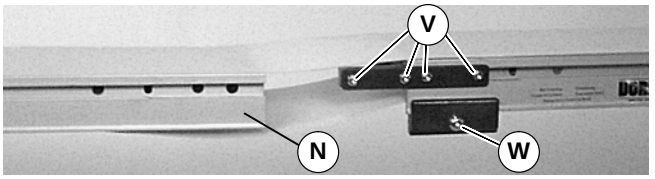

Figure 6

6. Loosen connector strip screws (V) and mounting bracket screws (W) on both sides of the conveyor.
7. Join conveyor sections (N and O of Figure 7). Position mounting bracket (P and Q) across conveyor sections.

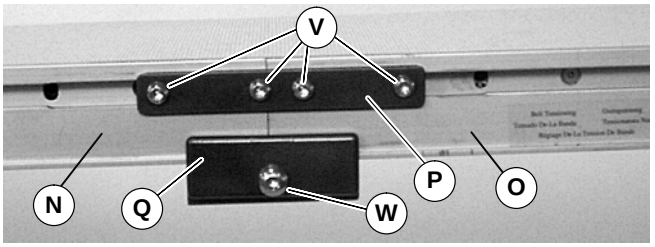

Figure 7

8. Tighten connector strip screws (V) to 2 Nm. Tighten bracket screws (W) to 9 Nm.
9. Insert a 5 mm hex key wrench into either end of the pinion gear (X of Figure 8). Rotate the pinion gear to extend the tensioning end gap (Y) to 30 mm.

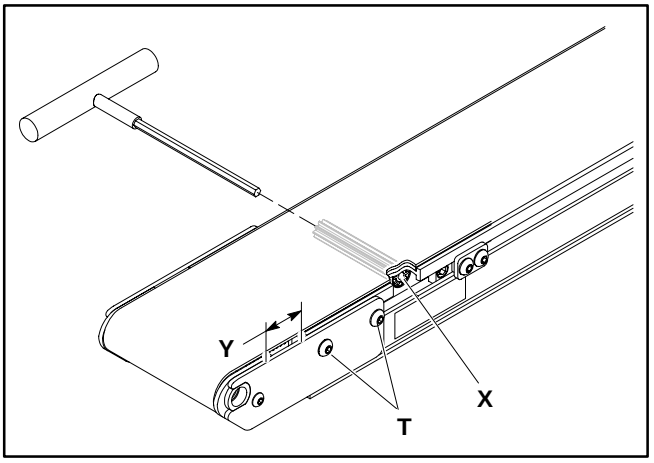

Figure 8

10. While holding the pinion gear (X), tighten cover plate screws (T) to 2 Nm.

Mounting Brackets with Return Rollers

44 mm to 305 mm Wide Flat Belt Conveyors

1. Typical components (Figure 9). Roller guards (Z) are shipped fastened to one end block (AA). Do NOT fasten to other block.

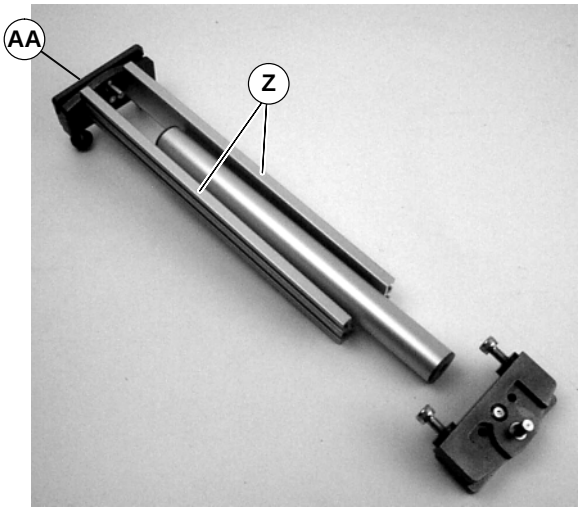

Figure 9

2. Loosen screws (AC of Figure 10) and remove screws and washers (AD).

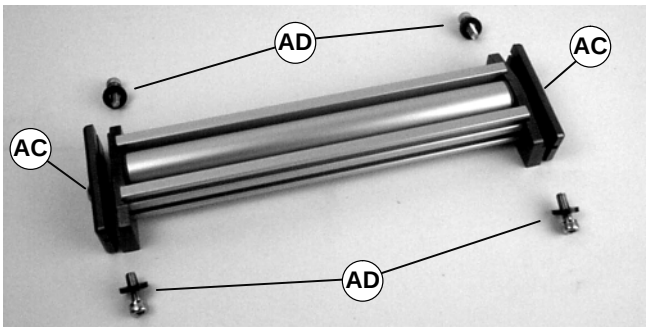

Figure 10

3. Attach clamp plates on each side of conveyor (Figure 11). Tighten the screws (AC) to 9 Nm.

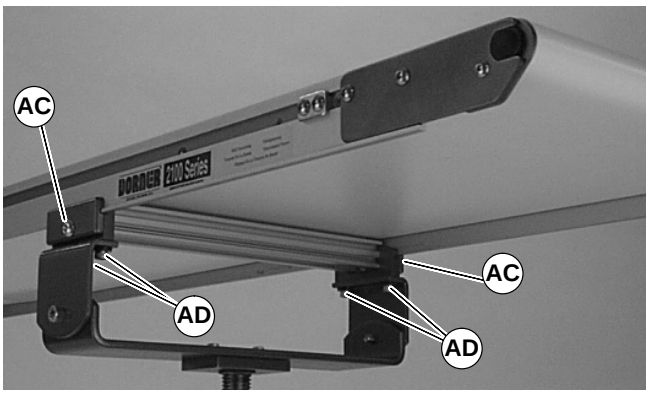

Figure 11

4. Attach to support stand. Tighten screws (AD) to 9 Nm. Make sure belt is free to move.

Required Tools

Standard Tools

- Hex key wrenches

– 2 mm	– 2.5 mm	– 3 mm
– 4 mm	– 5 mm	– 6 mm

- Small flat blade screwdriver
- Adjustable wrench
- Arbor press

Special Tools

- 2500M–ENG, 2100 Tool Kit
- 450282, Sealed Bearing Installation Tool

Checklist

- Keep service parts on hand. (See “Service Parts” for recommendations.)
- Keep supply of belt cleaner (part number 625619)
- Clean entire conveyor and knurled pulley while disassembled
- Replace worn or damaged parts

Lubrication

WARNING

Exposed moving parts can cause severe injury.

LOCK OUT POWER before removing guards or performing maintenance.

Pulley Bearings

NOTE:
Optional permanent grease fittings (part number 200398M) may be installed.

NOTE:
44 mm wide conveyors use shielded ball bearings and do not require lubrication.

1. With a small flat-blade screwdriver, remove plug (AE of Figure 12) from retainer (AF).

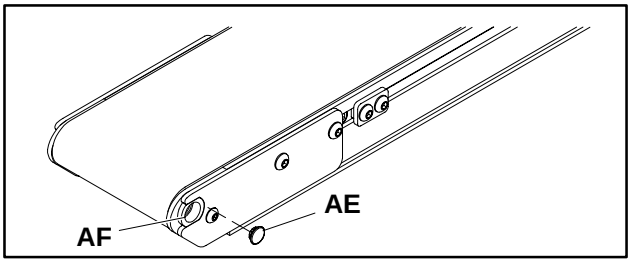

Figure 12

2. Install Dorner greasing adapter (AG of Figure 13), part number 200046M. Make sure the adapter shoulder is seated against the conveyor tail plate.

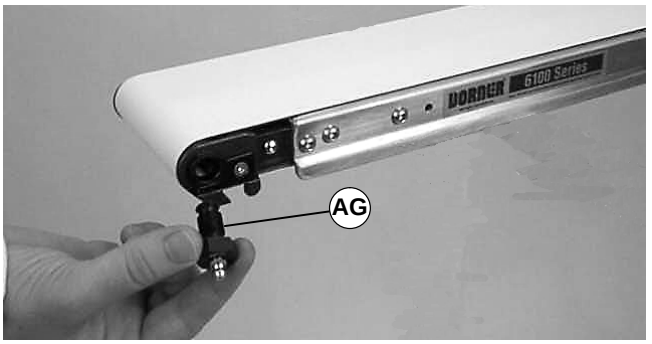

Figure 13

3. Use Dorner red grease, 397 gram cartridge (part # 829-002) or 397 gram can (part number 829-003). Lubricate pulley bearing every 750 hours or more frequently, depending on operating conditions.

NOTE: Lubricate pulley bearing every 750 hours or more frequently, depending on operating conditions. When lubricating pulley bearings, use a conventional hand grease gun with a maximum of one pump per application. *Do not over-lubricate.* Do not use a power grease gun.

4. Grease bearing with one (1) pump from a manual grease gun. Do not over-lubricate.
5. Remove grease adapter and install on opposite side of pulley. Repeat steps 2 and 4.

Drive Module Idler Pulley Bearings

No lubrication is required. Replace pulley if worn.

Drive Module Drive Pulley Bearings

No lubrication is required. Replace bearings if worn.

Mounting Brackets with Return Rollers

No lubrication is required. Replace bearings if worn.

Preventive Maintenance and Adjustment

Maintaining Conveyor Belt

Troubleshooting

Inspect conveyor belt for:

- Surface cuts or wear
- Stalling or slipping

Surface cuts and wear indicate:

- Sharp or heavy parts impacting belt
- Jammed parts
- Improperly installed bottom wiper
- Accumulated dirt in wiper
- Foreign material inside the conveyor
- Improperly positioned accessories
- Bolt-on guiding is pinching belt

Stalling or slipping indicates:

- Excessive load on belt
- Conveyor belt or drive timing belt are not properly tensioned
- Worn knurl or impacted dirt on drive pulley
- Intermittent jamming or drive train problems

NOTE: Visit www.dorner.com for complete list of troubleshooting solutions.

Cleaning

IMPORTANT: Do not use belt cleaners that contain alcohol, acetone, Methyl Ethyl Ketone (MEK) or other harsh chemicals.

Use Dorner Belt Cleaner (part number 625619). Mild soap and water may also be used. Do not soak the belt.

For /05 woven polyester and /06 black anti-static belts, use a bristled brush to improve cleaning.

Conveyor Belt Replacement

WARNING

Exposed moving parts can cause severe injury.

LOCK OUT POWER before removing guards or performing maintenance.

Conveyor Belt Replacement Sequence

NOTE: See Table of Contents for beginning page numbers of following procedures.

- Remove old conveyor belt
  - Conveyor without Gearmotor Mounting Package or Stands
  - Conveyor with Stands and/or Gearmotor Mounting Package
- Center Drive Module Removal
- Conveyor Belt Removal from Center Drive Module
- Install New Conveyor Belt
- Tension Conveyor Belt

Belt Removal for Conveyor Without Gearmotor Mounting Package or Stands

1. From the discharge end, remove tail cover plate screws (AJ of Figure 14) from one side of the conveyor.

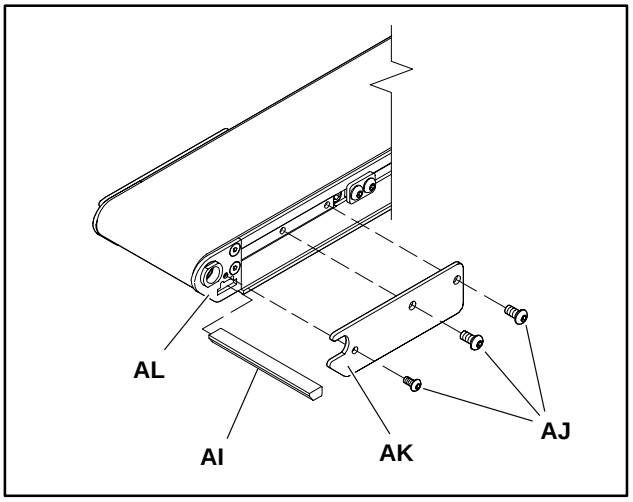

Figure 14

2. Remove tail cover plate (AK).
3. Slide bottom wiper (AI) through side slot of tail plate (AL).
4. If the conveyor is equipped with guiding and accessories, remove them from one side.

5. Loosen corner screws (AN of Figure 15), on each side of the center drive module (AO).

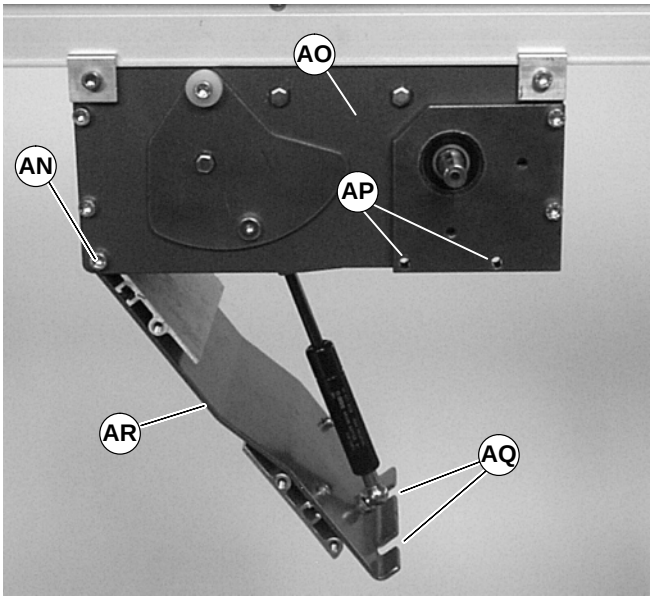

Figure 15

6. Remove tension door screws (AP) on each side of the center drive module.
7. Using finger grip holes (AQ), open the tension door (AR) to release conveyor belt tension.
8. On tension end of the conveyor, identified with label (AS of Figure 16), loosen tracking cam assemblies (AT) and cover plate screws (AU) on both sides of the conveyor.

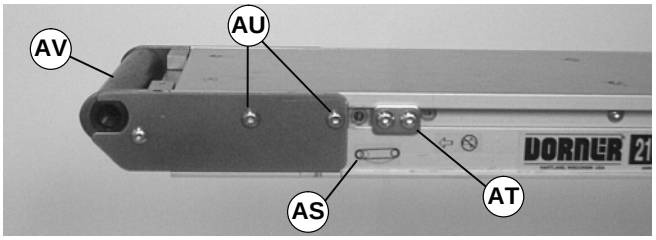

Figure 16

9. Slide the cam assemblies toward the center of the conveyor and push the end (AV) into the conveyor frame.

NOTE: On 1219 mm and shorter by 203 mm and wider conveyors, it will be necessary to remove the center drive module at the same time the conveyor belt is removed. See "Center Drive Module Removal" on page 11.

10. Remove conveyor belt.
11. Proceed to "Center Drive Module Removal" on page 11.

Belt Removal for Conveyor With Stands and/or Gearmotor Mounting Package

1. From the discharge end, remove tail cover plate screws (AJ of Figure 14) from one side of the conveyor.
2. Remove tail cover plate (AK).
3. Slide bottom wiper (AI) through side slot of tail plate (AL).
4. If the conveyor is equipped with guiding and accessories, remove them from one side.

NOTE: Figures 17 & 18 show a vertical mount in the A position with a parallel shaft gearmotor. Horizontal mount, D position and/or 90° gearmotor are similar.

5. Remove cover screws (AV of Figure 17) and remove cover (AW).

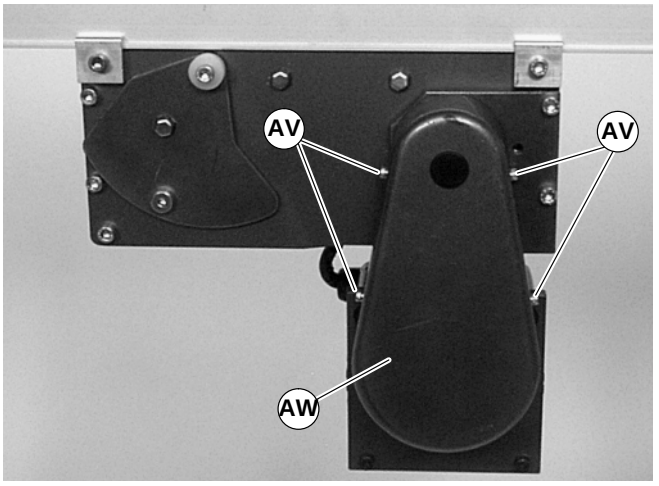

Figure 17

6. Loosen belt tensioner (AX of Figure 18) then remove the belt (AY).

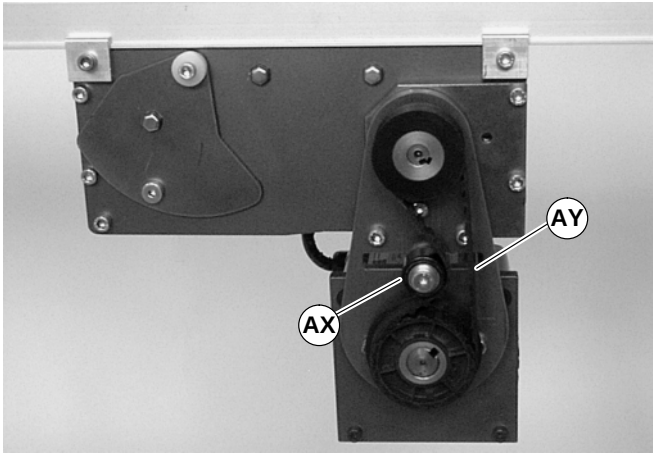

Figure 18

NOTE: If the timing belt does not slide over the pulley flange, loosen the driven pulley set screws (AZ of Figure 19) and remove the pulley (BA) with the belt (BB).

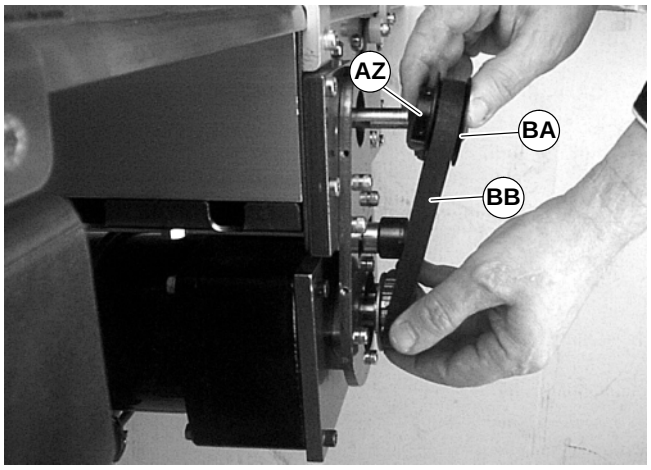

Figure 19

7. Remove three mounting screws (BE of Figure 20) and remove gearmotor package.

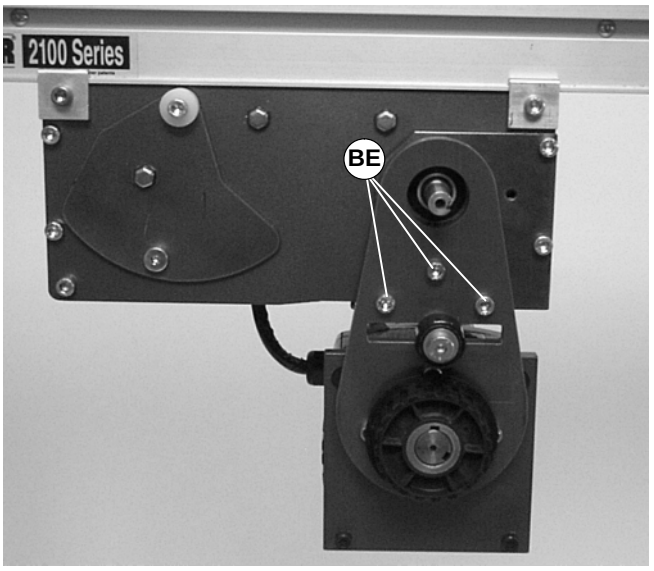

Figure 20

8. Loosen corner screws (AN of Figure 15), on each side of the center drive module (AO).
9. Remove tension door screws (AP) on each side of the center drive module.

NOTE: With vertical mounts, two cover screws (BE of Figure 20) were removed in step 7.

10. Using finger grip holes (AQ), open the tension door (AR) to release conveyor belt tension.
11. On tension end of the conveyor, identified with label (AS of Figure 16), loosen tracking cam assemblies (AT) and cover plate screws (AU) on both sides of the conveyor.
12. Slide the cam assemblies toward the center of the conveyor and push the end (AV) into the conveyor frame.

WARNING

To prevent injury from the support stand tipping-over when conveyor is uncoupled, anchor stand to floor or otherwise stabilize the stand.

NOTE: On 1219 mm and shorter by 203 mm and wider conveyors, it will be necessary to remove the center drive module at the same time the conveyor belt is removed. See "Center Drive Module Removal" (next section).

NOTE: To remove the belt, complete steps 13 & 14, at each stand location.

13. Loosen the mounting clamp plates (BF of Figure 21) on both sides of the conveyor. Raise the conveyor and remove the belt.

Figure 21

14. With the belt removed, secure the conveyor with clamp plates (BF).

15. Proceed to "Center Drive Module Removal", (next section).

Center Drive Module Removal

WARNING

Before loosening clamps (BG of Figure 22), provide a support (BH) under center drive module.

NOTE: If desired, mark center drive module location on conveyor.

1. Loosen clamp screws (BG of Figure 22) in each corner of the module.

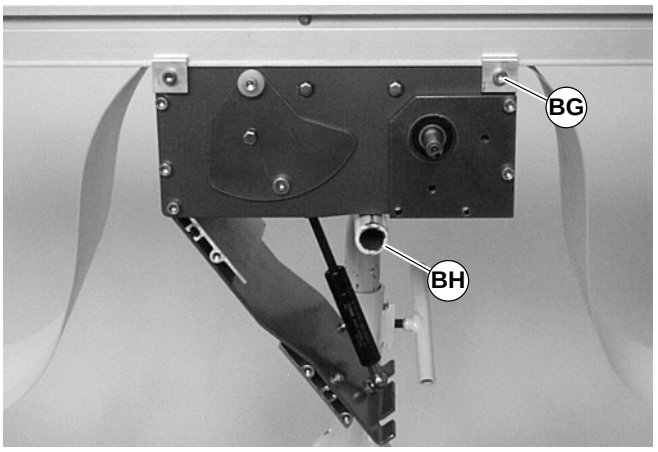

Figure 22

2. Remove the module.

Belt Removal from Center Drive Module

1. Remove drive plate screws (BI of Figure 23). Remove the tension drive plate (BJ).

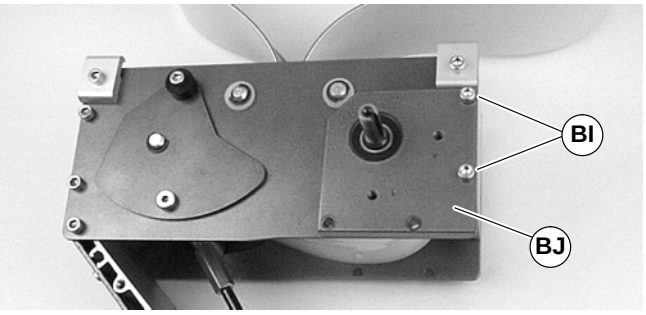

Figure 23

2. Remove drive pulley (BK of Figure 24).

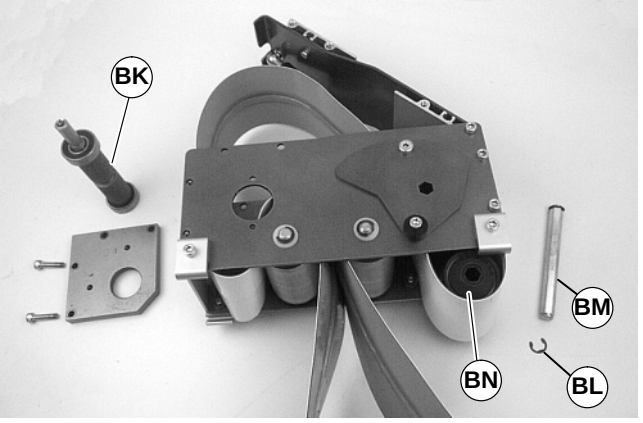

Figure 24

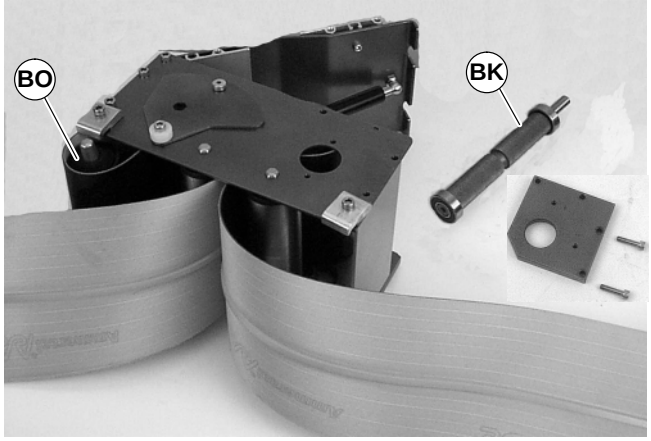

Figure 25

3. Remove grooved idler pulley:
- For 44 mm, 70 mm or 95 mm wide conveyor, detach E-ring clip (BL of Figure 24). Remove pulley shaft (BM) and remove pulley (BN).
- For 127 mm or wider conveyor, depress both sides of spring-loaded shaft and remove pulley (BO of Figure 25).

4. Remove the conveyor belt.

Installing a New Conveyor Belt

IMPORTANT: On a center drive conveyors, belt travel direction is identified by an arrow decal on the side of the conveyor (BP of Figures 26 & 27).

Figure 26

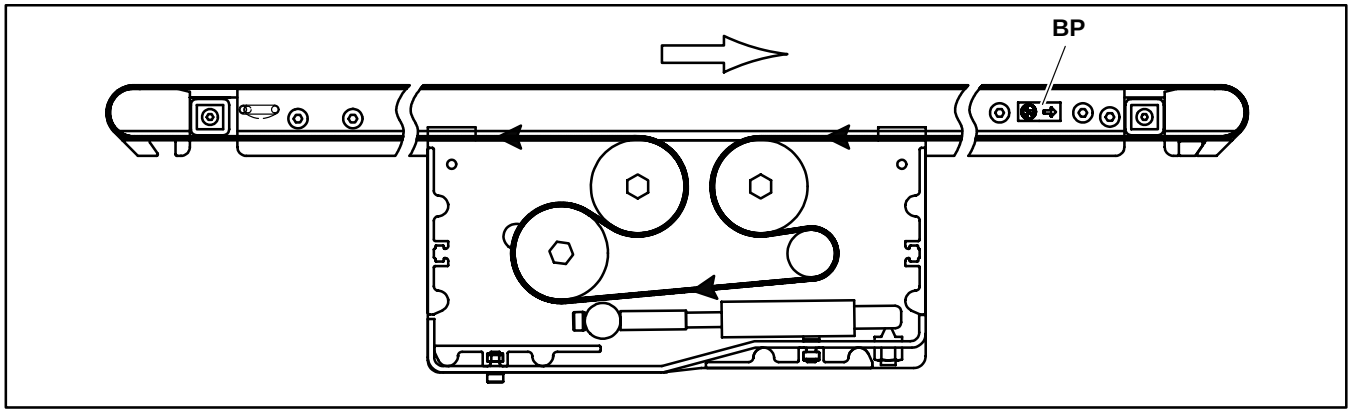

Figure 27

1. Orient the conveyor belt so that the splice leading fingers (BQ of Figure 28) point in the direction of belt travel as identified by the label (BP of Figure 26).

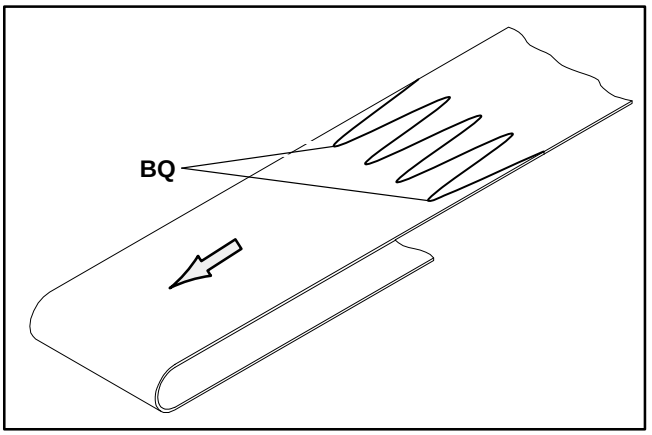

Figure 28

2. Place loop of belt into the drive module (Figure 29).

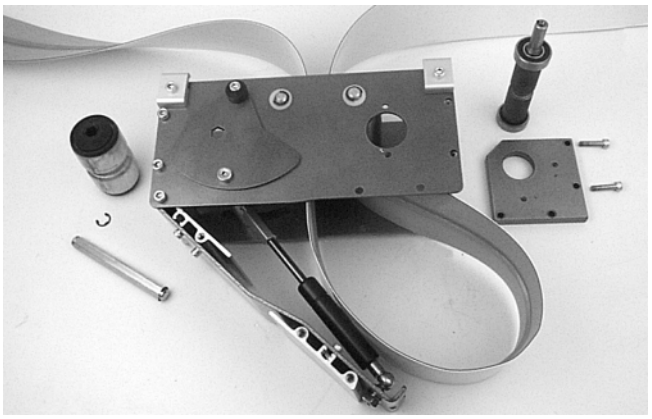

Figure 29

3. Place grooved idler pulley (BN of Figure 24 or BO of Figure 25) into the belt loop and install it in the drive module. Refer to “Belt Removal from Center Drive Module” on page 12 and reverse step 3.
4. Place drive pulley (BK of Figure 24 or 25) into the belt loop and install it in the drive module. Refer to “Belt Removal from Center Drive Module” on page 11 and reverse steps 1 and 2. Tighten screws (BI of Figure 23) to 9 Nm.

NOTE: On 1219 mm and shorter by 203 mm and wider conveyors, it will be necessary to replace the center drive module at the same time the conveyor belt is replaced.

5. Replace the center drive module onto the conveyor and attach clamps (BG of Figure 22) in each corner. Tighten screws to 9 Nm.

NOTE: On conveyor with stands, complete steps 6, 7 & 8 at each stand location.

6. Loosen the mounting clamp plates (BF of Figure 21), on both sides of the conveyor. Raise the conveyor and replace the belt.
7. Lower the conveyor onto the mounting blocks. Use care not to pinch belt.
8. Tighten clamp plate screws to 9 Nm.
9. Insert a 5 mm hex key wrench into either end of the pinion gear (BR of Figure 30). Rotate the pinion gear to extend the tensioning end gap (BU) to 30 mm.

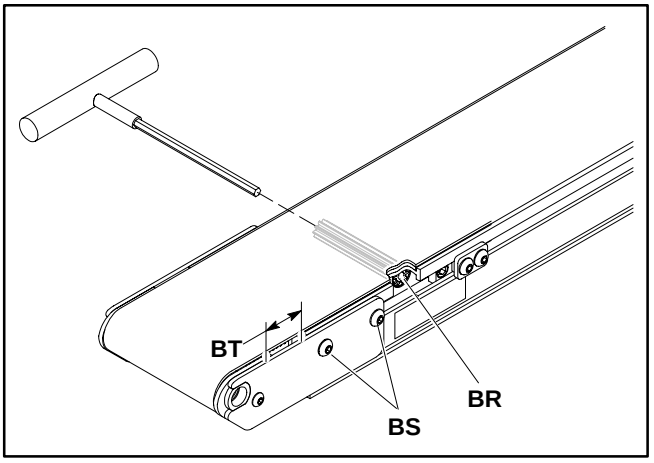

Figure 30

10. While holding the pinion gear (BR), tighten cover plate screws (BS) to 2 Nm.

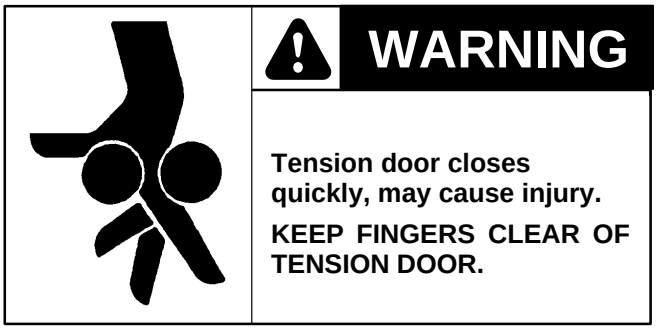

11. Carefully close the tension door (BU of Figure 31).

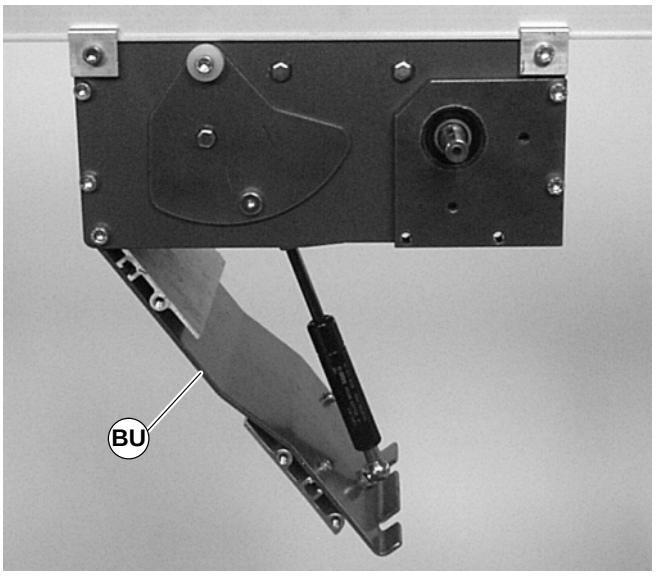

Figure 31

12. Tighten corner screws (BU of Figure 32) on each side of the drive module to 9 Nm.

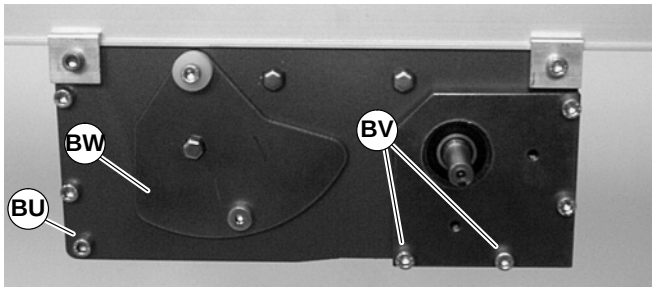

Figure 32

NOTE: If equipped with gearmotor mounting package, replace by completing in reverse order steps 3 through 5 of "Belt Removal for Conveyor With Stands and/or Gearmotor Mounting Package" on page 9.

13. Re-install tension door screws (BV of Figure 32) on each side of the module. Tighten screws to 9 Nm.

14. Re–install discharge bottom wiper (AI of Figure 14): Reverse steps 1 through 3 of "Belt Removal for Conveyor Without Gearmotor Mounting Package or Stands", page 8.

15. Replace guiding, if applicable.

Conveyor Belt Tensioning

NOTE: For a new belt, the tension plate will be in position indicated in Figure 32 (BW). When the tension plate extends to position indicated in Figure 33 (BW), the conveyor belt must be replaced.

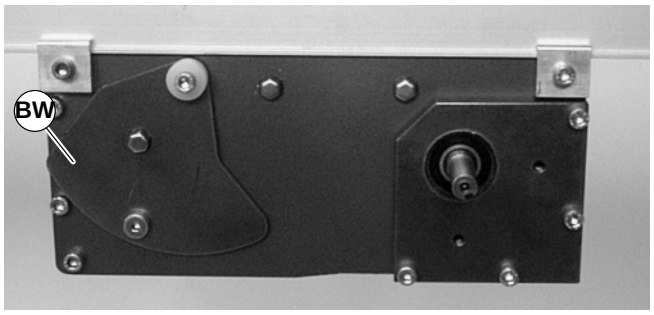

Figure 33

The conveyor is equipped with an automatic tensioning cylinder. No tensioning adjustment is required.

Pulley Removal

WARNING

Exposed moving parts can cause severe injury.

LOCK OUT POWER before removing guards or performing maintenance.

Remove the conveyor belt to access the pulley(s). Perform the indicated steps of one of the following procedures:

- "Belt Removal for Conveyor Without Gearmotor Mounting Package or Stands", page 8, steps 1 through 10.
- "Belt Removal for Conveyor With Stands and/or Gearmotor Mounting Package", page 9, steps 1 through 14.

Remove the desired pulley following procedures A, B or C:

- **A** – End Pulley Removal
- **B** – Drive Pulley Removal
- **C** – Idler Pulley Removal

A – End Pulley Removal

NOTE: Bearing removal tools (part numbers 25–09 and 906–278 included in Tool Kit 2500M–ENG) are required to remove end pulleys.

1. With a small flat blade screwdriver, remove plug (BX of Figure 34) from retainer (BY).

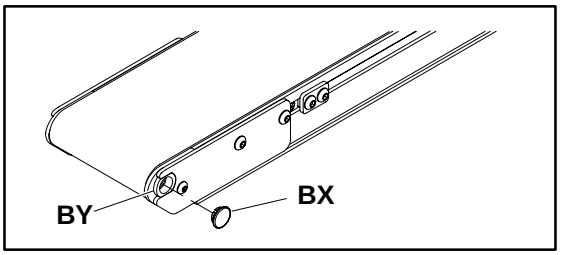

Figure 34

2. Remove the tail cover plate screws (BZ of Figure 35) and tail cover plates (CA) on both sides of the conveyor.

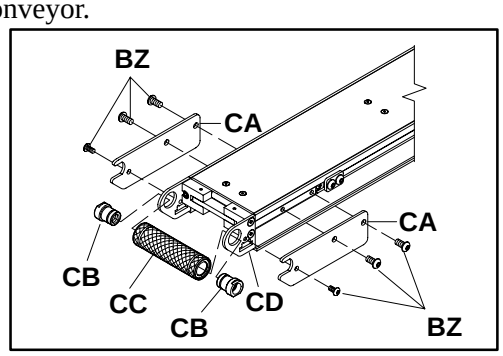

Figure 35

3. Position bearing anvil/sleeve removal tool (CJ of Figure 36), part number 25-09, over the retaining sleeve (CB of Figure 35 or Figure 36).

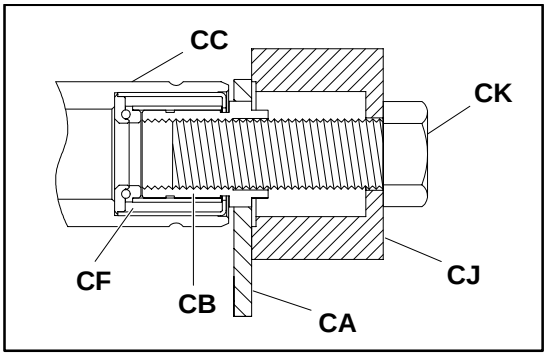

Figure 36

4. Insert threaded bolt (CK of Figure 36), part number 906-278, through the bearing anvil/sleeve removal tool (CJ) and into the retaining sleeve (CB).
5. Tighten the bolt (CK) until the retaining sleeve (CB) is free of the tail pulley plate (CA).
6. Remove the retaining sleeve (CB) from the bolt (CK) and repeat for the other side.
7. Remove the pulley (CC).

B – Drive Pulley Removal

1. Remove the gearmotor drive package. Refer to “Belt Removal for Conveyor With Stands and/or Gearmotor Mounting Package”, page 9, steps 5 through 7.
2. Remove the drive pulley. Refer to “Belt Removal from Center Drive Module”, page 11, steps 1 and 2.

C – Idler Pulley Removal

1. Remove the gearmotor drive package. Refer to “Belt Removal for Conveyor With Stands and/or Gearmotor Mounting Package”, page 9, steps 5 through 7.
2. Detach the center drive module. Refer to ”Center Drive Module Removal”, page 11.
3. Remove the grooved idler pulley. Refer to “Belt Removal from Center Drive Module”, step 3, page 12.
4. Remove smooth idler pulleys:

- For 44 mm, 70 mm or 95 mm wide conveyor, detach E-ring clips and remove washers (CL of Figure 37). Remove pulley shafts (CM) and pulleys (CN).

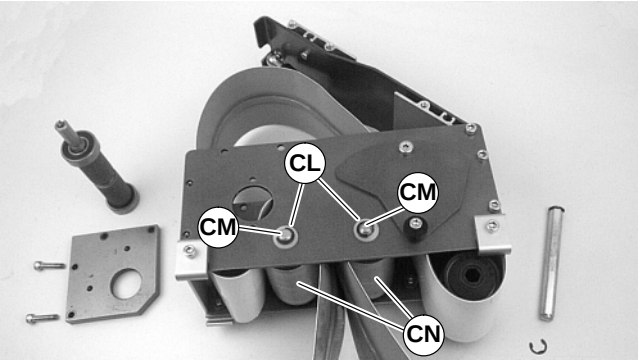

Figure 37

- For 127 mm or wider conveyor, depress both sides of each spring-loaded shaft (CO of Figure 38). Remove pulleys (CP).

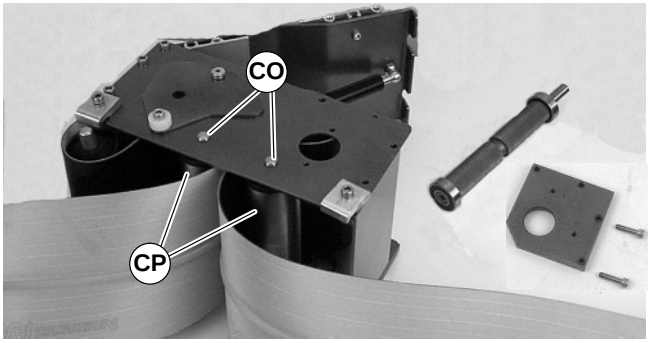

Figure 38

Bearing Replacement for End Pulleys

IMPORTANT: Once removed, do not re-use bearings.

NOTE: Bearing removal and installation tools (part numbers 25–05, 25–08, 25–09 and 25–10 included in Tool Kit 2500M–ENG) are required to remove and install bearings.

Bearing Removal

NOTE: The bearings of a 44 mm wide gang drive pulley cannot be replaced. Order pulley assembly (part number 204002).

1. Insert bearing removal tool (CQ of Figure 39), part number 25–05, into the pulley (CR) until shoulder (CS) seats against bottom of bearing (CT).

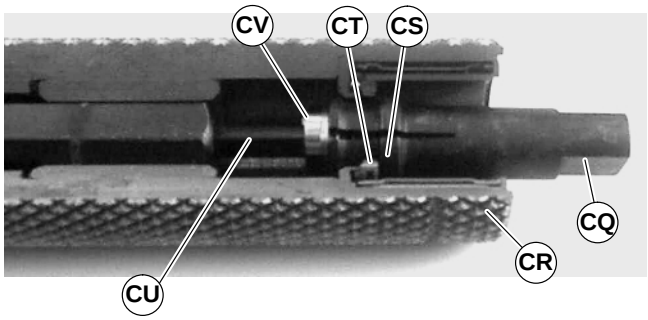

Figure 39

2. While holding bearing removal tool (CQ) in position, insert extension tool (CU), part number 25–08, into opposite end of pulley (CR). Rotate bearing removal tool (CQ) to engage hex tip of extension tool (CU) into screw (CV) of bearing removal tool.

3. While maintaining extension tool (CU) position, use a wrench (CW of Figure 40) to rotate the bearing removal tool (CQ) to expand the flare end of the tool.

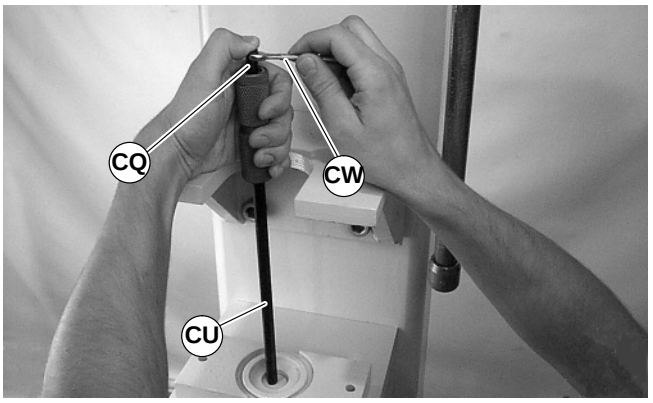

Figure 40

4. Orient bearing anvil/sleeve removal tool (CX of Figure 41), part number 25–09, with cavity facing up and place pulley (CR) onto tool.

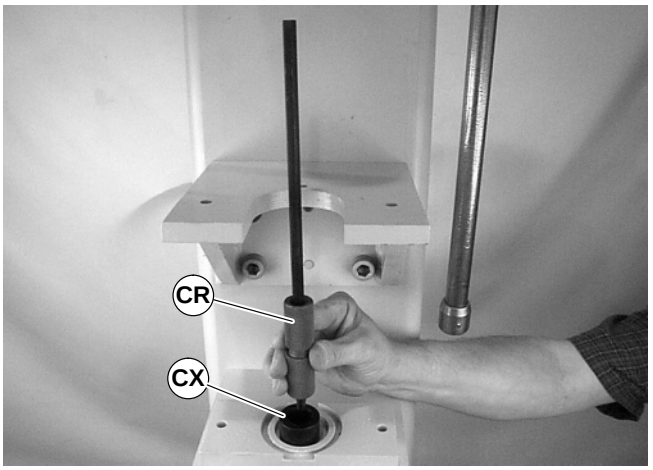

Figure 41

5. With arbor press (CY of Figure 42) or similar device, press bearing out of pulley (CR).

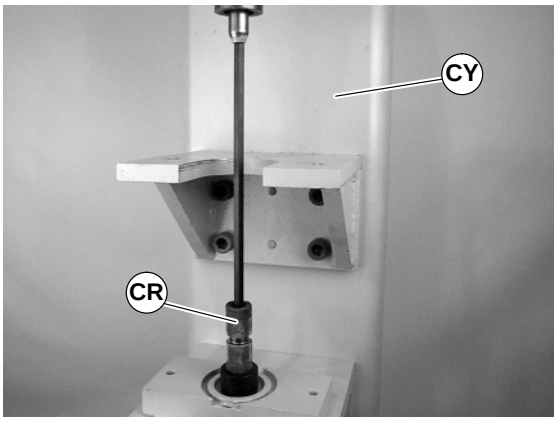

Figure 42

NOTE: If a severely worn bearing breaks apart during removal, pulley must be replaced.

Bearing Installation

1. Orient bearing anvil/sleeve removal tool (CX of Figure 43), part number 25–09, with cavity facing up and place pulley (CR) onto tool.

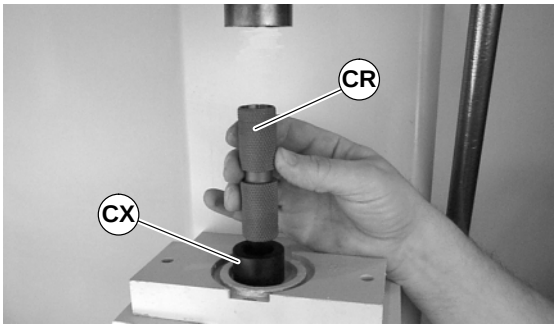

Figure 43

2. Install bearing insertion tool (CZ of Figure 44), part number 25–10, into arbor press (CY) or similar device.

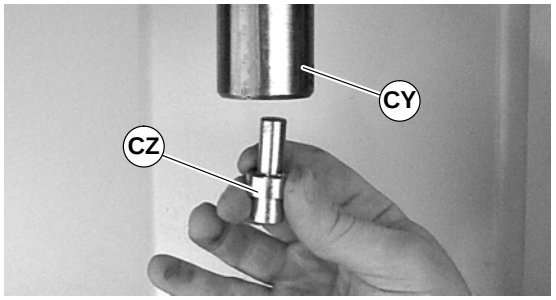

Figure 44

3. Place and hold bearing (CT of Figure 45), part number 21–33, onto insertion tool (CZ) in position over pulley (CR).

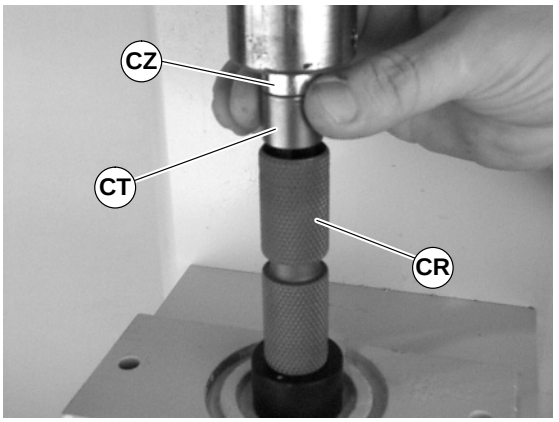

Figure 45

IMPORTANT: Bearing and pulley alignment is critical.

4. Press bearing (CT of Figure 46) into pulley (CR) until seated.

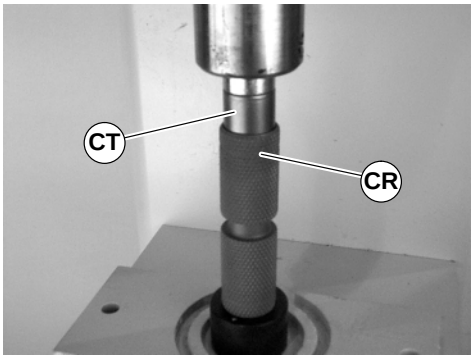

Figure 46

Bearing Replacement for Drive Pulley

IMPORTANT: Once removed, do not re-use bearings.

Bearing Removal

1. Position the drive pulley (DA of Figure 47) in a standard bearing separator (DB) as shown.

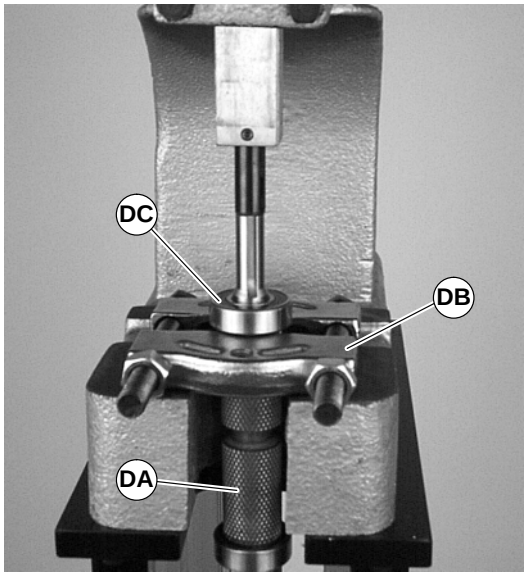

Figure 47

2. Using an arbor press or similar device, press-off the bearing (DC).

Bearing Installation

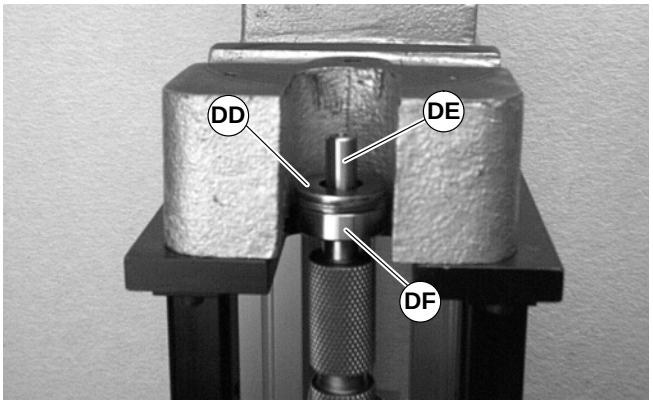

Figure 48

3. Place the shaft of the tool (part number 450282) (DG of Figure 49) over pulley shaft (DH).

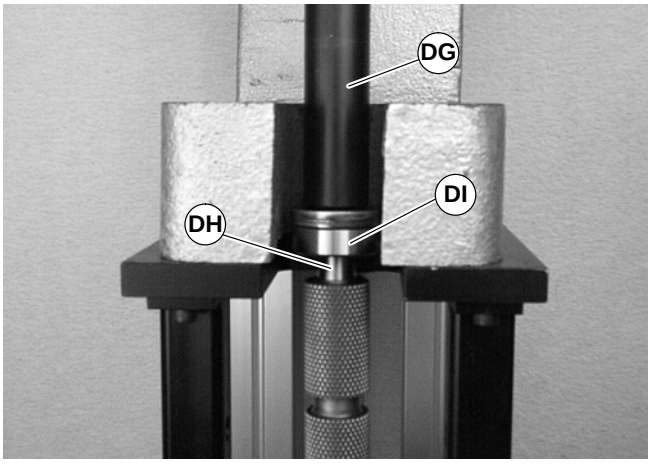

Figure 49

4. Using an arbor press or similar device, press the bearing (DI) onto pulley shaft as shown.

Bearing Replacement for Idler Pulleys

NOTE: Bearings can not be removed from idler pulleys. Replace entire pulley, when worn. See "Service Parts", page 20.

Pulley Replacement

End Pulleys

Reverse removal procedure "A" (see page 14).

Drive Pulley

Reverse removal procedure "B" (see page 15).

Idler Pulley

Reverse removal procedure "C" (see page 15).

Notes

Service Parts

NOTE: For replacement parts other than those shown on this page, contact an authorized Dorner Service Center or the factory.

51mm Wide Conveyor Assembly

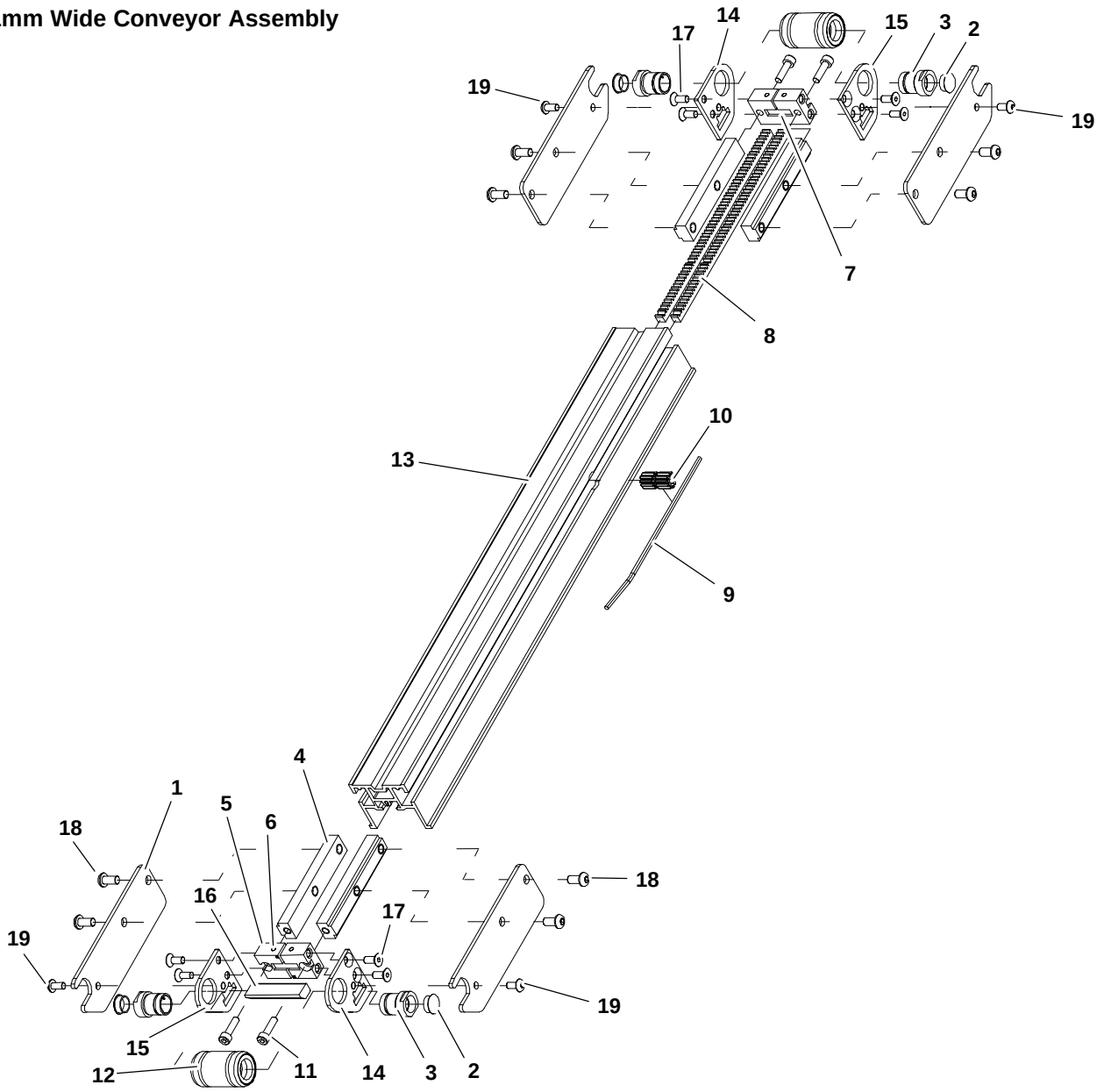

Item	Part Number	Description
1	200030	Cover Plate, SAE
	200030M	Cover Plate, Metric
	200351	Cover Plate, Notched (Only 610mm Long Conveyor), SAE
	200351M	Cover Plate, Notched (Only 610mm Long Conveyor), Metric
2	807-784	Plastic Plug
3	200035	Pulley Spindle Retaining Sleeve
4	241129	Tension Slide Bar, SAE
	241128	Tension Slide Bar, Metric
5	200659	Mounting Block SAE
	200659M	Mounting Block Metric
6	200695P	Knurl Pin
7	201472	Flex Link Bar
8	240420	Rack Gear 14.5 PA x 24 P
9	240422	Pinion Pin
10	240423	Pinion 51mm
11	902–112	Socket Head Screw #10–32 x .75”
	920518M	Socket Head Screw M5 x 18mm
12	303102	Spindle 51mm
13	See Chart Below	51mm Frame
14	200027	Tail Plate, SAE, RH
	200027M	Tail Plate, Metric, RH
15	200028	Tail Plate, SAE, LH
	200028M	Tail Plate, Metric, LH
16	203502	Bottom Wiper
17	903–108	Flat Head Screw #10–32 x .50”
	930512M	Flat Head Screw M5 x 12mm
18	901–129	Button Head Screw 1/4–20 x .50”
	910612M	Button Head Screw M6 x 12mm
19	901–106	Button Head Screw #10–32 x .38”
	910510M	Button Head Screw M5 x 10mm

Item 13: 51mm Conveyor Frame		
Length	Part Number	
610mm	240402–01908	
914mm	240402–03108	
1219mm	240402–04308	
1524mm	240402–05508	
1829mm	240402–06708	
2134mm	240402–07908	
2438mm	240402–09108	
2743mm	240402–10308	
3048mm	240402–11508	
3353mm	240402–12708	
3658mm	240402–13908	
3962mm	240402–07908	240402–07200
4267mm	240402–09108	240402–07200
4572mm	240402–10308	240402–07200
4877mm	240402–11508	240402–07200
5182mm	240402–12708	240402–07200
5486mm	240402–13908	240402–07200
5791mm	240402–07908	240402–14400
6096mm	240402–09108	240402–14400
6401mm	240402–10308	240402–14400
6706mm	240402–11508	240402–14400
7010mm	240402–12708	240402–14400
7315mm	240402–13908	240402–14400

Service Parts

76mm to 152mm Wide Conveyor Assembly

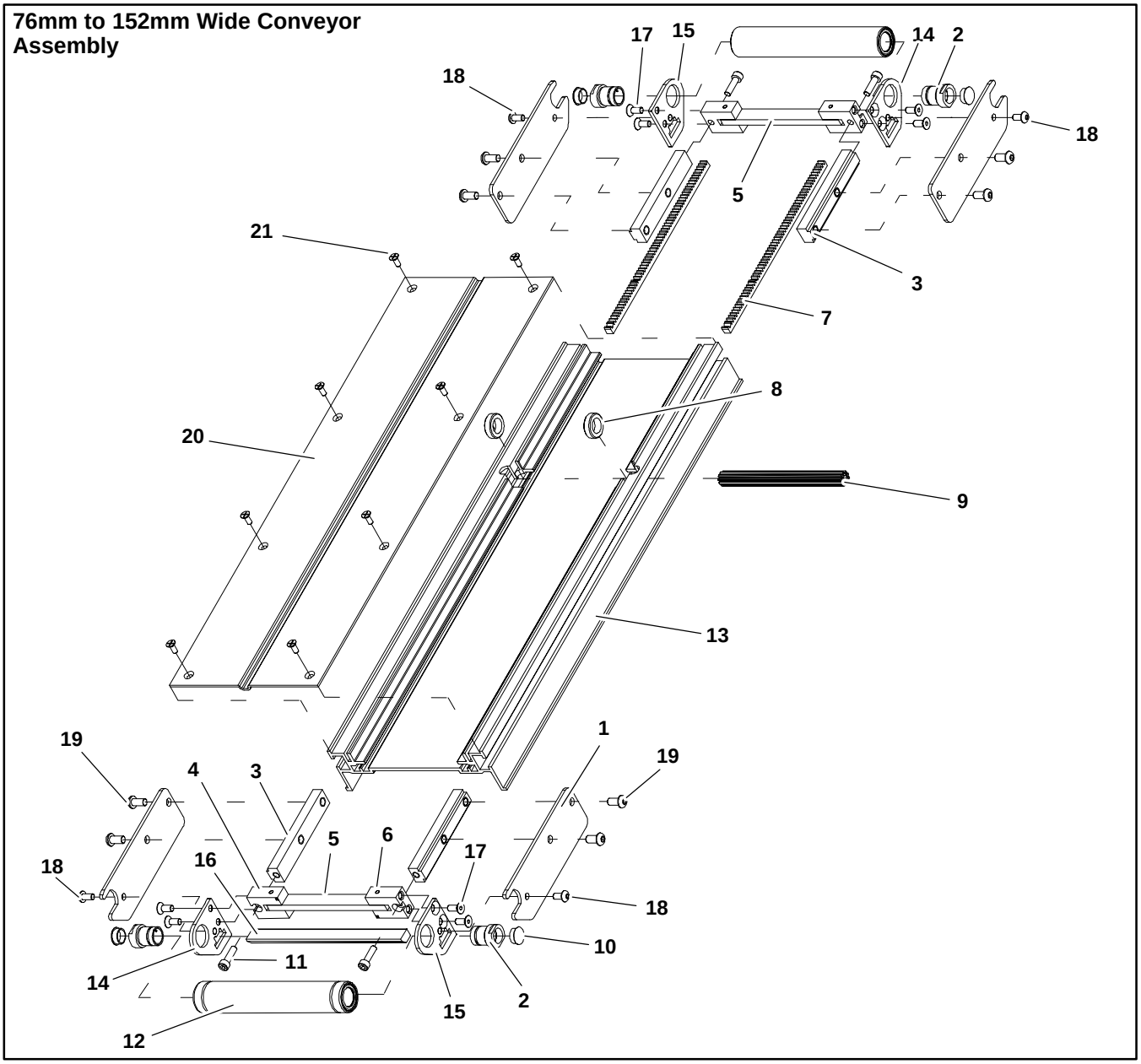

Item	Part Number	Description
1	200030	Cover Plate, SAE
	200030M	Cover Plate, Metric
	200351	Cover Plate, Notched (Only 610mm Long Conveyor), SAE
	200351M	Cover Plate, Notched (Only 610mm Long Conveyor), Metric
2	200035	Pulley Spindle Retaining Sleeve
3	241129	Tension Slide Bar, SAE
	241128	Tension Slide Bar, Metric
4	200659	Mounting Block, SAE
	200659M	Mounting Block, Metric
5	207603	Flex–Link Bar 76mm
	207604	Flex–Link Bar 102mm
	207605	Flex–Link Bar 127mm
	207606	Flex–Link Bar 152mm
6	200695P	Knurl Pin

7	240420	Rack Gear 14.5 PA x 24 P
8	240421	Pinion Bushing
9	203003M	Gear Pinion 76mm
	203004M	Gear Pinion 102mm
	203005M	Gear Pinion 127mm
	203006M	Gear Pinion 152mm
10	807-784	Plastic Plug
11	902–112	Socket Head Cap Screw #10–32 x .75”
	920518M	Socket Head Cap Screw M5 x 18mm
12	See chart below	Spindle Assembly
13	See chart below	Conveyor Frame
14	200028	Tail Plate, SAE, LH
	200028M	Tail Plate, Metric, LH

15	200027	Tail Plate, SAE, RH
	200027M	Tail Plate, Metric, RH
16	203503	Bottom Wiper 76mm
	203504	Bottom Wiper 102mm
	203505	Bottom Wiper 127mm
	203506	Bottom Wiper 152mm
17	903–108	Flat Head Screw #10–32 x .50”
	930512M	Flat Head Screw M5 x 12mm
18	901–106	Button Head Screw #10–32 x .38”
	910510M	Button Head Screw M5 x 10mm
19	901–129	Button Head Screw 1/4–20 x .50”
	910612M	Button Head Screw M6 x 12mm
20	See chart below	Bed Plate
21	807–1074	Flat Head Screw M4 x 10mm

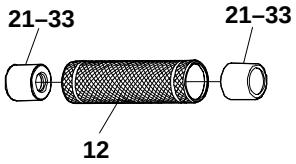

Item 12: Spindle Assembly		
Width	With Bearings (21–33)	Without Bearings
76mm	303103	303203
102mm	303104	303204
127mm	303105	303205
152mm	303106	303206

Item 13: Conveyor Frame		
Length	Part Number	
610mm	2404WW–01908	
914mm	2404WW–03108	
1219mm	2404WW–04308	
1524mm	2404WW–05508	
1829mm	2404WW–06708	
2134mm	2404WW–07908	
2438mm	2404WW–09108	
2743mm	2404WW–10308	
3048mm	2404WW–11508	
3353mm	2404WW–12708	
3658mm	2404WW–13908	
3962mm	2404WW–06708	2404WW–07908
4267mm	2404WW–06708	2404WW–09108
4572mm	2404WW–06708	2404WW–10308
4877mm	2404WW–06708	2404WW–11508
5182mm	2404WW–06708	2404WW–12708
5486mm	2404WW–06708	2404WW–13908
5791mm	2404WW–07908	2404WW–14400
6096mm	2404WW–09108	2404WW–14400
6401mm	2404WW–10308	2404WW–14400
6706mm	2404WW–11508	2404WW–14400
7010mm	2404WW–12708	2404WW–14400
7315mm	2404WW–13908	2404WW–14400
WW = Conveyor width reference: 03, 04, 05, 06		

Item 20: Bed Plate		
Length	Part Number	
610mm	2405WW–01904	
914mm	2405WW–03104	
1219mm	2405WW–04304	
1524mm	2405WW–05504	
1829mm	2405WW–06704	
2134mm	2405WW–07904	
2438mm	2405WW–09104	
2743mm	2405WW–10304	
3048mm	2405WW–11504	
3353mm	2405WW–12704	
3658mm	2405WW–13904	
3962mm	2405WW–07196	2404WW–07904
4267mm	2405WW–07196	2404WW–09104
4572mm	2405WW–07196	2404WW–10304
4877mm	2405WW–07196	2404WW–11504
5182mm	2405WW–07196	2404WW–12704
5486mm	2405WW–07196	2404WW–13904
5791mm	2405WW–07908	2405WW–14400
6096mm	2405WW–09108	2405WW–14400
6401mm	2405WW–10308	2405WW–14400
6706mm	2405WW–11508	2405WW–14400
7010mm	2405WW–12708	2405WW–14400
7315mm	2405WW–13908	2405WW–14400
WW = Conveyor Width reference: 03, 04, 05, 06		

Service Parts

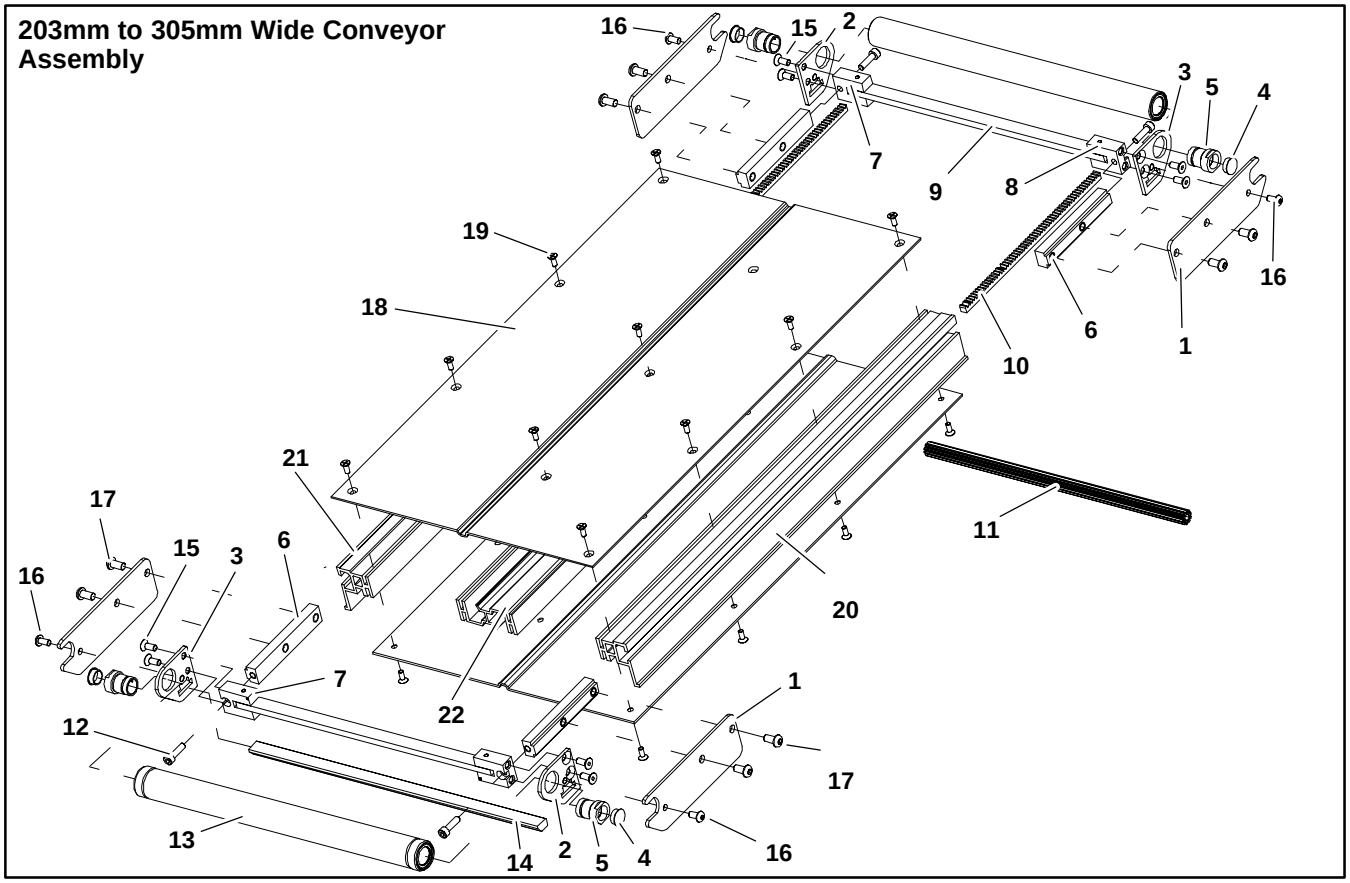

Item	Part Number	Description
1	200030	Cover Plate, SAE
	200030M	Cover Plate, Metric
	200351	Cover Plate, Notched (Only 610mm Long Conveyor), SAE
	200351M	Cover Plate, Notched (Only 610mm Long Conveyor), Metric
2	200027	Tail Plate, SAE, RH
	200027M	Tail Plate, Metric, RH
3	200028	Tail Plate, SAE, LH
	200028M	Tail Plate, Metric, LH
4	807-784	Plastic Plug
5	200035	Pulley Spindle Retaining Sleeve
6	241128	Tension Slide Bar, Metric
	241129	Tension Slide Bar, SAE
7	200659	Mounting Block, SAE
	200659M	Mounting Block, Metric
8	200695P	Knurl Pin
9	207608	Flex–Link Bar 203mm
	207610	Flex–Link Bar 254mm
	207612	Flex–Link Bar 305mm
10	240420	Rack Gear 14.5 PA x 24 P
11	203008M	Gear Pinion 203mm
	203010M	Gear Pinion 254mm
	203012M	Gear Pinion 305mm
12	902–112	Socket Head Cap Screw #10–32 x .75”

	920518M	Socket Head Cap Screw M5 x 18mm
13	See chart below	Spindle Assembly
14	203508	Bottom Wiper 203mm
	203510	Bottom Wiper 254mm
	203512	Bottom Wiper 305mm
15	903–108	Flat Head Screw #10–32 x .50”
	930512M	Flat Head Screw M5 x 12
16	901–106	Button Head Screw #10–32 x .38”
	910510M	Button Head Screw M5 x 10mm
17	901–129	Button Head Screw 1/4–20 x .50”
	910612M	Button Head Screw M6 x 12mm
18	See chart below	Bed Plate
19	807–1074	Flat Head Screw M4 x 10mm
20	See chart below	Side Rail RH 203–610mm Wide
21	See chart below	Side Rail LH 203–610mm Wide
22	See chart below	Center Rail 203–610mm Wide

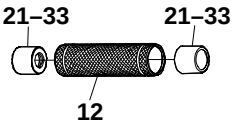

Item 13: Spindle Assembly		
Width	With Bearings (21–33)	Without Bearings
203mm	303108	303208
254mm	303110	303210
305mm	303112	303212

Item 11: Side Rail RH 203–610mm Wide		
Length	Part Number	
610mm	240412–01908	
914mm	240412–03108	
1219mm	240412–04308	
1524mm	240412–05508	
1829mm	240412–06708	
2134mm	240412–07908	
2438mm	240412–09108	
2743mm	240412–10308	
3048mm	240412–11508	
3353mm	240412–12708	
3658mm	240412–13908	
3962mm	240412–07200	240412–07908
4267mm	240412–07200	240412–09108
4572mm	240412–07200	240412–10308
4877mm	240412–07200	240412–11508
5182mm	240412–07200	240412–12708
5486mm	240412–07200	240412–13908
5791mm	240412–07908	240412–14400
6096mm	240412–09108	240412–14400
6401mm	240412–10308	240412–14400
6706mm	240412–11508	240412–14400
7010mm	240412–12708	240412–14400
7315mm	240412–13908	240412–14400

Item 12: Side Rail LH 203–610mm Wide		
Length	Part Number	
610mm	240413–01908	
914mm	240413–03108	
1219mm	240413–04308	
1524mm	240413–05508	
1829mm	240413–06708	
2134mm	240413–07908	
2438mm	240413–09108	
2743mm	240413–10308	
3048mm	240413–11508	
3353mm	240413–12708	
3658mm	240413–13908	
3962mm	240413–07200	240413–07908
4267mm	240413–07200	240413–09108
4572mm	240413–07200	240413–10308
4877mm	240413–07200	240413–11508
5182mm	240413–07200	240413–12708
5486mm	240413–07200	240413–13908
5791mm	240413–07908	240413–14400
6096mm	240413–09108	240413–14400
6401mm	240413–10308	240413–14400
6706mm	240413–11508	240413–14400
7010mm	240413–12708	240413–14400
7315mm	240413–13908	240413–14400

Item 13: Center Rail 203–305mm Wide		
Length	Part Number	
610mm	240414–01273	
914mm	240414–02473	
1219mm	240414–03673	
1524mm	240414–04873	
1829mm	240414–06073	
2134mm	240414–07273	
2438mm	240414–08473	
2743mm	240414–09673	
3048mm	240414–10873	
3353mm	240414–12073	
3658mm	240414–13273	
3962mm	240414–07200	240414–07273
4267mm	240414–07200	240414–08473
4572mm	240414–07200	240414–09673
4877mm	240414–07200	240414–10873
5182mm	240414–07200	240414–12073
5486mm	240414–07200	240414–13273
5791mm	240414–06998	240414–14400
6096mm	240414–08198	240414–14400
6401mm	240414–09398	240414–14400
6706mm	240414–10598	240414–14400
7010mm	240414–11798	240414–14400
7315mm	240414–12998	240414–14400

Item 14: Bed Plate		
Length	Part Number	
610mm	2405WW–01904	
914mm	2405WW–03104	
1219mm	2405WW–04304	
1524mm	2405WW–05504	
1829mm	2405WW–06704	
2134mm	2405WW–07904	
2438mm	2405WW–09104	
2743mm	2405WW–10304	
3048mm	2405WW–11504	
3353mm	2405WW–12704	
3658mm	2405WW–13904	
3962mm	2405WW–07196	2405WW–07904
4267mm	2405WW–07196	2405WW–09104
4572mm	2405WW–07196	2405WW–10304
4877mm	2405WW–07196	2405WW–11504
5182mm	2405WW–07196	2405WW–12704
5486mm	2405WW–07196	2405WW–13904
5791mm	2405WW–07908	2405WW–14396
6096mm	2405WW–09108	2405WW–14396
6401mm	2405WW–10308	2405WW–14396
6706mm	2405WW–11508	2405WW–14396
7010mm	2405WW–12708	2405WW–14396
7315mm	2405WW–13908	2405WW–14396
WW = Conveyor Width reference: 08, 10, 12		

Service Parts

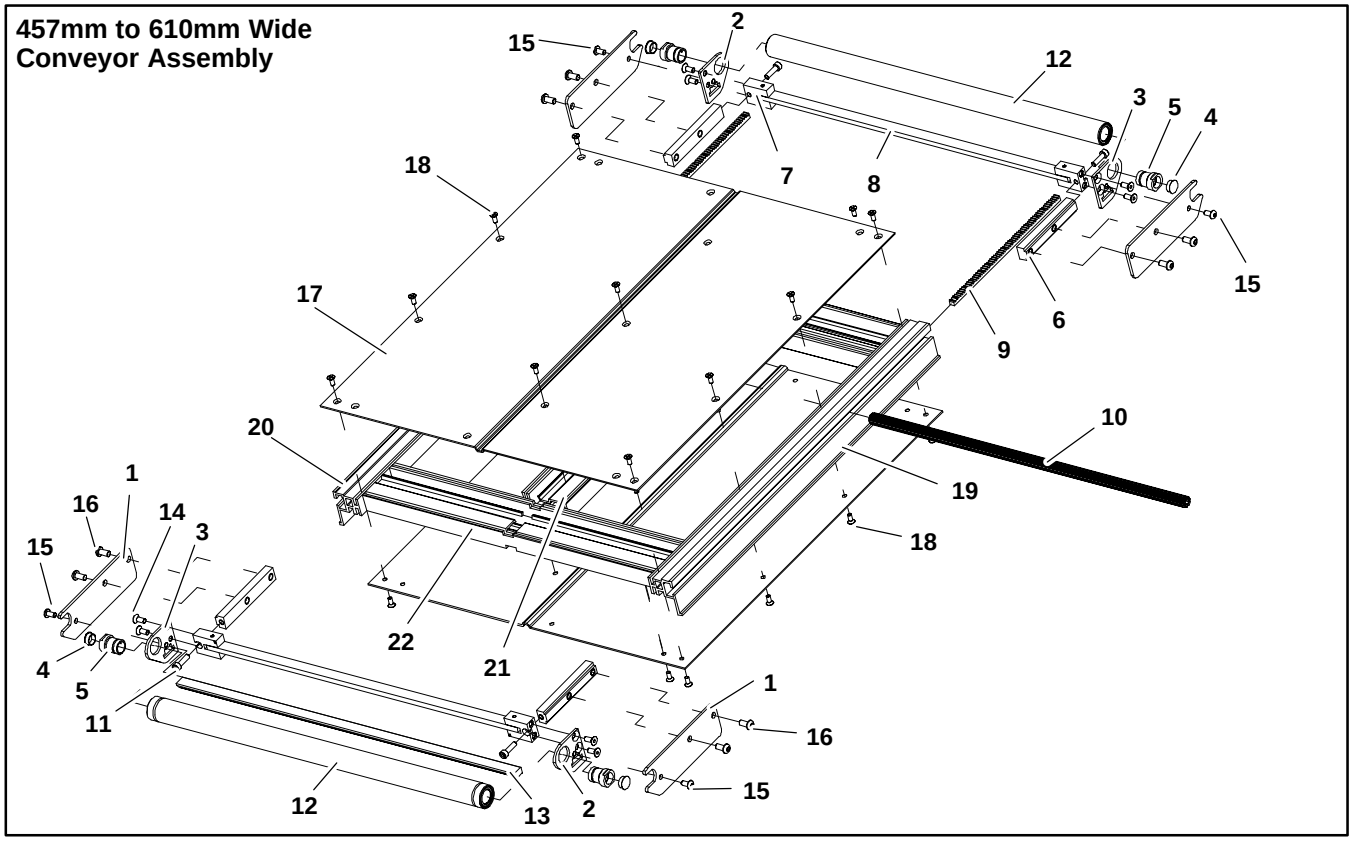

Item	Part Number	Description
1	200030	Cover Plate, SAE
	200030M	Cover Plate, Metric
	200351	Cover Plate, Notched (Only 610mm Long Conveyor), SAE
	200351M	Cover Plate, Notched (Only 610mm Long Conveyor), Metric
2	200027	Tail Plate, SAE, RH
	200027M	Tail Plate, Metric, RH
3	200028	Tail Plate, SAE, LH
	200028M	Tail Plate, Metric, LH
4	807-784	Plastic Plug
5	200035	Pulley Spindle Retaining Sleeve
6	241129	Tension Slide Bar, SAE
	241128	Tension Slide Bar, Metric
7	200659	Mounting Block, SAE
	200659M	Mounting Block, Metric
8	207618	Flex–Link Bar 457mm
	207621	Flex–Link Bar 533mm
	207624	Flex–Link Bar 610mm
9	240420	Rack Gear 14.5 PA x 24 P
10	203018M	Gear Pinion 457mm
	203021M	Gear Pinion 533mm
	203024M	Gear Pinion 610mm
11	902–112	Socket Head Cap Screw #10–32 x .75”
12	See chart below	Spindle Assembly
13	203518	Bottom Wiper 457mm
	203521	Bottom Wiper 533mm
	203524	Bottom Wiper 610mm
14	903–108	Flat Head Screw #10–32 x .50”
	930512M	Flat Head Screw M5 x 12mm
15	901–106	Button Head Screw #10–32 x .38”
	910510M	Button Head Screw M5 x 10mm
16	901–129	Button Head Screw 1/4–20 x .50”
	910612M	Button Head Screw M6 x 12mm
17	See chart below	Bed Plate
18	807–1074	Flat Head Screw M4 x 10mm
19	See chart below	Side Rail RH 203–610mm Wide
20	See chart below	Side Rail LH 203–610mm Wide
21	See chart below	Center Rail 203–305mm Wide
22	240417	Center Rail Cross Support 457mm
	240419	Center Rail Cross Support 533mm
	240418	Center Rail Cross Support 610mm
23	200223	Outboard Bearing Retaining Sleeve

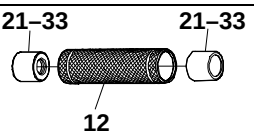

Item 12: Spindle Assembly

Width	With Bearings (21–33)	Without Bearings
457mm	303118	303218
533mm	303121	303221
610mm	303124	303224

Item 17: Bed Plate		
Length	Part Number	
610mm	2405WW–01904	
914mm	2405WW–03104	
1219mm	2405WW–04304	
1524mm	2405WW–05504	
1829mm	2405WW–06704	
2134mm	2405WW–07904	
2438mm	2405WW–09104	
2743mm	2405WW–10304	
3048mm	2405WW–11504	
3353mm	2405WW–12704	
3658mm	2405WW–13904	
3962mm	2405WW–07196	2405WW–07904
4267mm	2405WW–07196	2405WW–09104
4572mm	2405WW–07196	2405WW–10304
4877mm	2405WW–07196	2405WW–11504
5182mm	2405WW–07196	2405WW–12704
5486mm	2405WW–07196	2405WW–13904
5791mm	2405WW–07908	2405WW–14396
6096mm	2405WW–09108	2405WW–14396
6401mm	2405WW–10308	2405WW–14396
6706mm	2405WW–11508	2405WW–14396
7010mm	2405WW–12708	2405WW–14396
7315mm	2405WW–13908	2405WW–14396
WW = Conveyor Width reference: 18, 21, 24		

Item 19: Side Rail RH 203–610mm Wide		
Length	Part Number	
610mm	240412–01908	
914mm	240412–03108	
1219mm	240412–04308	
1524mm	240412–05508	
1829mm	240412–06708	
2134mm	240412–07908	
2438mm	240412–09108	
2743mm	240412–10308	
3048mm	240412–11508	
3353mm	240412–12708	
3658mm	240412–13908	
3962mm	240412–07200	240412–07908
4267mm	240412–07200	240412–09108
4572mm	240412–07200	240412–10308
4877mm	240412–07200	240412–11508
5182mm	240412–07200	240412–12708
5486mm	240412–07200	240412–13908
5791mm	240412–07908	240412–14400
6096mm	240412–09108	240412–14400
6401mm	240412–10308	240412–14400
6706mm	240412–11508	240412–14400
7010mm	240412–12708	240412–14400
7315mm	240412–13908	240412–14400

Item 20: Side Rail LH 203–610mm Wide		
Length	Part Number	
610mm	240413–01908	
914mm	240413–03108	
1219mm	240413–04308	
1524mm	240413–05508	
1829mm	240413–06708	
2134mm	240413–07908	
2438mm	240413–09108	
2743mm	240413–10308	
3048mm	240413–11508	
3353mm	240413–12708	
3658mm	240413–13908	
3962mm	240413–07200	240413–07908
4267mm	240413–07200	240413–09108
4572mm	240413–07200	240413–10308
4877mm	240413–07200	240413–11508
5182mm	240413–07200	240413–12708
5486mm	240413–07200	240413–13908
5791mm	240413–07908	240413–14400
6096mm	240413–09108	240413–14400
6401mm	240413–10308	240413–14400
6706mm	240413–11508	240413–14400
7010mm	240413–12708	240413–14400
7315mm	240413–13908	240413–14400

Item 21: Center Rail 203–305mm Wide		
Length	Part Number	
610mm	240414–00998	
914mm	240414–02198	
1219mm	240414–03398	
1524mm	240414–04498	
1829mm	240414–05798	
2134mm	240414–06998	
2438mm	240414–08198	
2743mm	240414–09398	
3048mm	240414–10598	
3353mm	240414–11798	
3658mm	240414–12998	
3962mm	240414–06700	240414–06998
4267mm	240414–06700	240414–08198
4572mm	240414–06700	240414–09398
4877mm	240414–06700	240414–10598
5182mm	240414–06700	240414–11798
5486mm	240414–06700	240414–12998
5791mm	240414–06998	240414–13900
6096mm	240414–08198	240414–13900
6401mm	240414–09398	240414–13900
6706mm	240414–10598	240414–13900
7010mm	240414–11798	240414–13900
7315mm	240414–12998	240414–13900

Service Parts

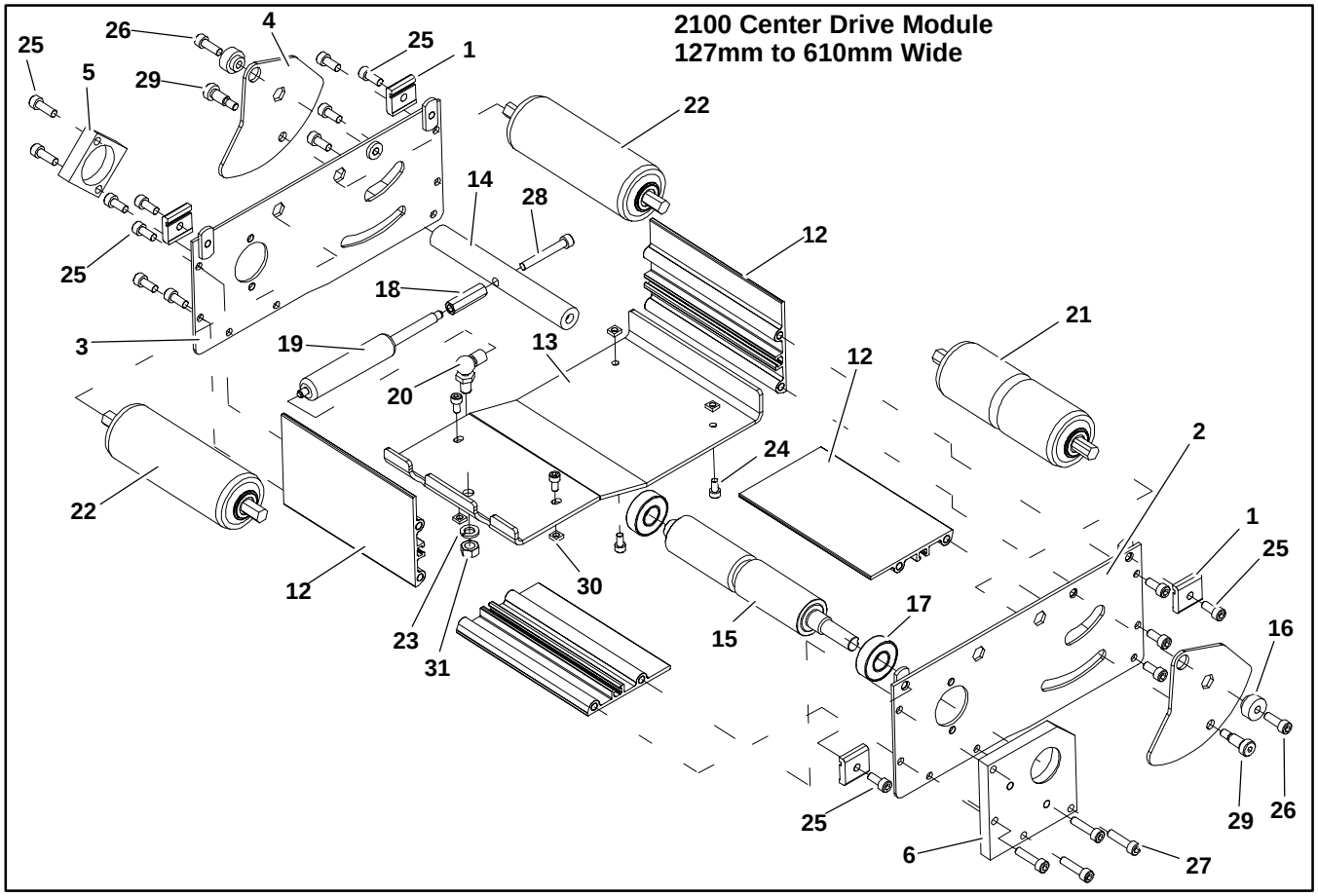

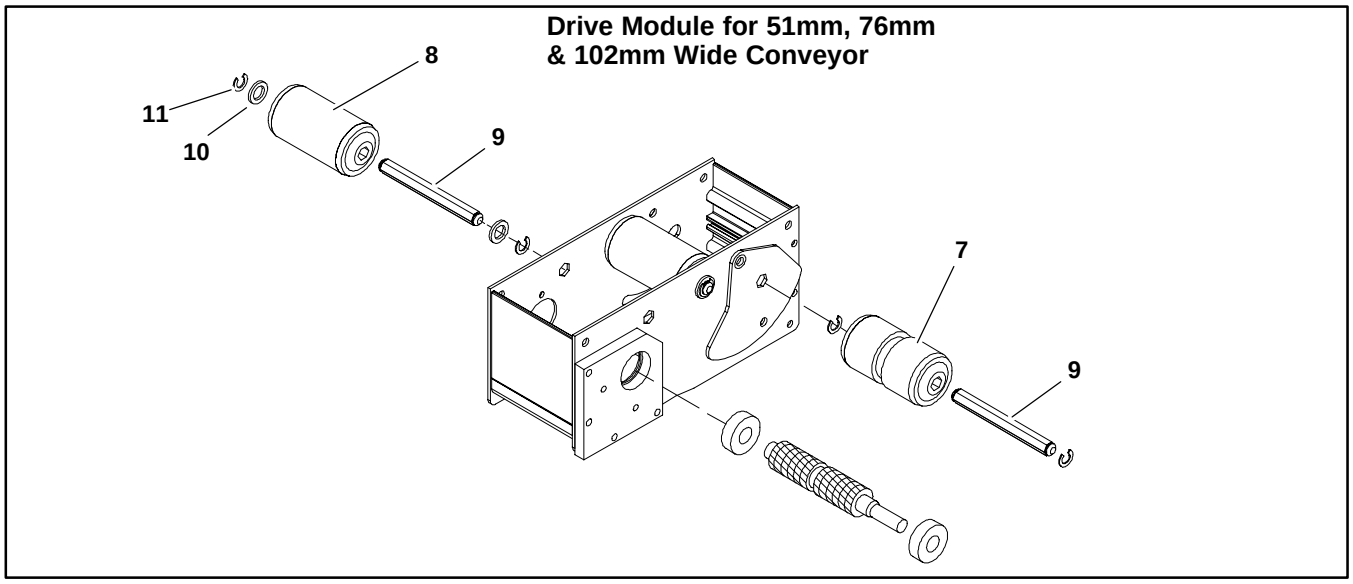

Item	Part Number	Description
1	204566	Module Mounting Clip
2	202633M	Side Plate LH
3	202634M	Side Plate RH
4	463026	Pivot Tension Plate
5	463028M	Bearing Mounting Block
6	463029M	Bearing–Drive Mounting Plate
7	463044	Roller 1.9” .44hex Grv 51mm
	463045	Roller 1.9” .44hex Grv 76mm
	807–1001	Roller 1.9” .44hex Grv 102mm

8	463046	Roller 1.9” .44hex SS Flat 51mm
	807–1007	Roller 1.9” .44hex SS Flat 76mm
	807–1008	Roller 1.9” .44hex SS Flat 102mm
9	915-215	E-Ring Clip (0.44 diameter)
10	801-115	Washer
11	463402	Pulley Shaft 51mm
	463403	Pulley Shaft 76mm
	463404	Pulley Shaft 102mm
12	463802	Center Drive Rail 51mm
	463803	Center Drive Rail 76mm

	463804	Center Drive Rail 102mm
	463805	Center Drive Rail 127mm
	463806	Center Drive Rail 152mm
	463808	Center Drive Rail 203mm
	463810	Center Drive Rail 254mm
	463812	Center Drive Rail 305mm
	463818	Center Drive Rail 457mm
	463821	Center Drive Rail 533mm
	463824	Center Drive Rail 610mm
13	463202M	Center Dr Bottom Cover 51mm
	463203M	Center Dr Bottom Cover 76mm
	463204M	Center Dr Bottom Cover 102mm
	463205M	Center Dr Bottom Cover 127mm
	463206M	Center Dr Bottom Cover 152mm
	463208M	Center Dr Bottom Cover 203mm
	463210M	Center Dr Bottom Cover 254mm
	463212M	Center Dr Bottom Cover 305mm
	463218M	Center Dr Bottom Cover 457mm
	463205M 463208M 463208M	Center Dr Bottom Cover 533mm
	463212M 463212M	Center Dr Bottom Cover 610mm
14	463302M	Center Dr Tensioning Rod 51mm
	463303M	Center Dr Tensioning Rod 76mm
	463304M	Center Dr Tensioning Rod 102mm
	463305M	Center Dr Tensioning Rod 127mm
	463306M	Center Dr Tensioning Rod 152mm
	463308M	Center Dr Tensioning Rod 203mm
	463310M	Center Dr Tensioning Rod 254mm
	463312M	Center Dr Tensioning Rod 305mm
	463318M	Center Dr Tensioning Rod 457mm
	463321M	Center Dr Tensioning Rod 533mm
	463324M	Center Dr Tensioning Rod 610mm
15	463702M	Center Drive Spindle 51mm
	463703M	Center Drive Spindle 76mm
	463704M	Center Drive Spindle 102mm
	463705M	Center Drive Spindle 127mm
	463706M	Center Drive Spindle 152mm
	463708M	Center Drive Spindle 203mm
	463710M	Center Drive Spindle 254mm
	463712M	Center Drive Spindle 305mm

	463718M	Center Drive Spindle 457mm
	463721M	Center Drive Spindle 533mm
	463724M	Center Drive Spindle 610mm
16	801–117	Nylon Bushing
17	802–124	Ball Bearing
18	807–983	Hex Standoff 13mm x 35mm LG M6
19	807–1040	Gas Spring 8mm DIA x 1.97 ST 51mm Wide
	807–986	Gas Spring 8mm DIA x 1.97 ST 76mm Wide
	807–985	Gas Spring 8mm DIA x 1.97 ST 102–152mm Wide
	807–984	Gas Spring 8mm DIA x 1.97 ST 203–305mm Wide
	807–985 807–985	Gas Spring 8mm DIA x 1.97 ST 457–610mm Wide
20	807–987	Steel Ball Joint M6 x M8
21	807–1002	Roller 1.9” .44 Hex Grv 127mm
	807–1003	Roller 1.9” .44 Hex Grv 152mm
	807–1004	Roller 1.9” .44 Hex Grv 203mm
	807–1005	Roller 1.9” .44 Hex Grv 254mm
	807–1006	Roller 1.9” .44 Hex Grv 305mm
	807–1091	Roller 1.9” .44 Hex Grv 457mm
	807–1092	Roller 1.9” .44 Hex Grv 533mm
	807–1093	Roller 1.9” .44 Hex Grv 610mm
22	807–1009	Roller 1.9” .44 Hex Flat 51mm
	807–1010	Roller 1.9” .44 Hex Flat 152mm
	807–1011	Roller 1.9” .44 Hex Flat 203mm
	807–1012	Roller 1.9” .44 Hex Flat 203mm
	807–1013	Roller 1.9” .44 Hex Flat 305mm
	807–1088	Roller 1.9” .44 Hex Flat 457mm
	807–1089	Roller 1.9” .44 Hex Flat 533mm
	807–1090	Roller 1.9” .44 Hex Flat 610mm
23	911–120	Spring Lock Washer
24	920510M	Socket Head Screw M5 x 10mm
25	920614M	Socket Head Screw M6 x 14mm
26	920618M	Socket Head Screw M6 x 18mm
27	920625M	Socket Head Screw M6 x 25mm
28	920645M	Socket Head Screw M6 x 45mm
29	940812M	SHLD Screw 8mm DIA x 12mm
30	990503M	hex Nut, Full M5 – .8
31	990801M	Hex Nut, Full M8 – 1.25

–04 76mm Aluminum Side

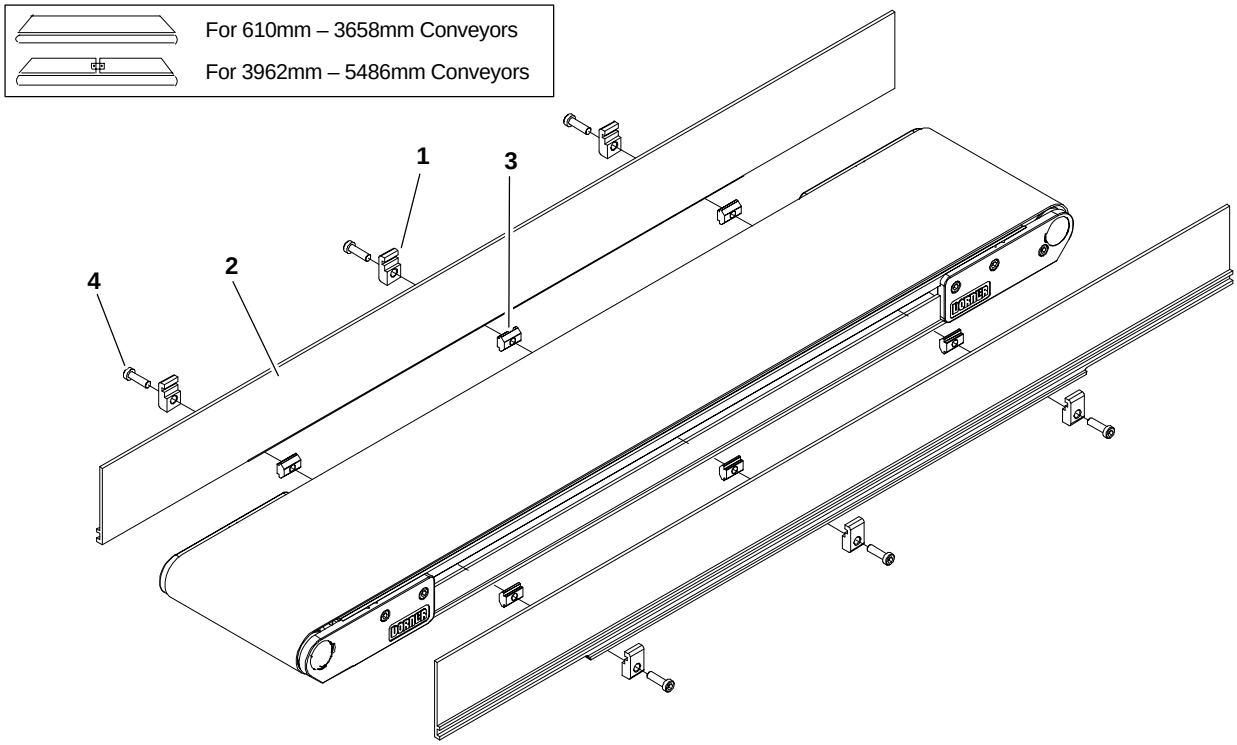

Item	Part Number	Description
1	200121	Guide Retaining Clip
2	See Chart Below	2200 Guide 76mm HS
3	200695P	Single Drop–in Tee Bar
4	920694M	Socket Head Screw M6 x 20mm

Item 2: 2200 Guide 76mm HS			
Length		End Guide	End Guide
610mm	Left Hand	280403–02400	N/A
	Right Hand	280403–02400	N/A
914mm	Left Hand	280403–03600	N/A
	Right Hand	280403–03600	N/A
1219mm	Left Hand	280403–04800	N/A
	Right Hand	280403–04800	N/A
1524mm	Left Hand	280403–06000	N/A
	Right Hand	280403–06000	N/A
1829mm	Left Hand	280403–07200	N/A
	Right Hand	280403–07200	N/A
2134mm	Left Hand	280403–08400	N/A
	Right Hand	280403–08400	N/A
2438mm	Left Hand	280403–09600	N/A
	Right Hand	280403–09600	N/A
2743mm	Left Hand	280403–10800	N/A
	Right Hand	280403–10800	N/A
3048mm	Left Hand	280403–12000	N/A
	Right Hand	280403–12000	N/A
3353mm	Left Hand	280403–13200	N/A
	Right Hand	280403–13200	N/A
3658mm	Left Hand	280403–14400	N/A
	Right Hand	280403–14400	N/A
3962mm	Left Hand	280401–07500	280401–08100
	Right Hand	280402–07500	280402–08100
4267mm	Left Hand	280401–07500	280401–09300
	Right Hand	280402–07500	280402–09300
4572mm	Left hand	280401–07500	280401–10500
	Right Hand	280402–07500	280402–10500
4877mm	Left Hand	280401–07500	280401–11700
	Right Hand	280402–07500	280402–11700
5182mm	Left Hand	280401–07500	280401–12900
	Right Hand	280402–07500	280402–12900
5486mm	Left Hand	280401–07500	280401–14100
	Right Hand	280402–07500	280402–14100
5791mm	Left Hand	280401–08100	280401–14700
	Right Hand	280402–08100	280402–14700
6096mm	Left Hand	280401–09300	280401–14700
	Right Hand	280402–09300	280402–14700
6401mm	Left Hand	280401–10500	280401–14700
	Right Hand	280402–10500	280402–14700
6706mm	Left Hand	280401–11700	280401–14700
	Right Hand	280402–11700	280402–14700
7010mm	Left Hand	280401–12900	280401–14700
	Right Hand	280402–12900	280402–14700
7315mm	Left Hand	280401–14100	280401–14700
	Right Hand	280402–14100	280402–14700

–05 38mm Aluminum Side

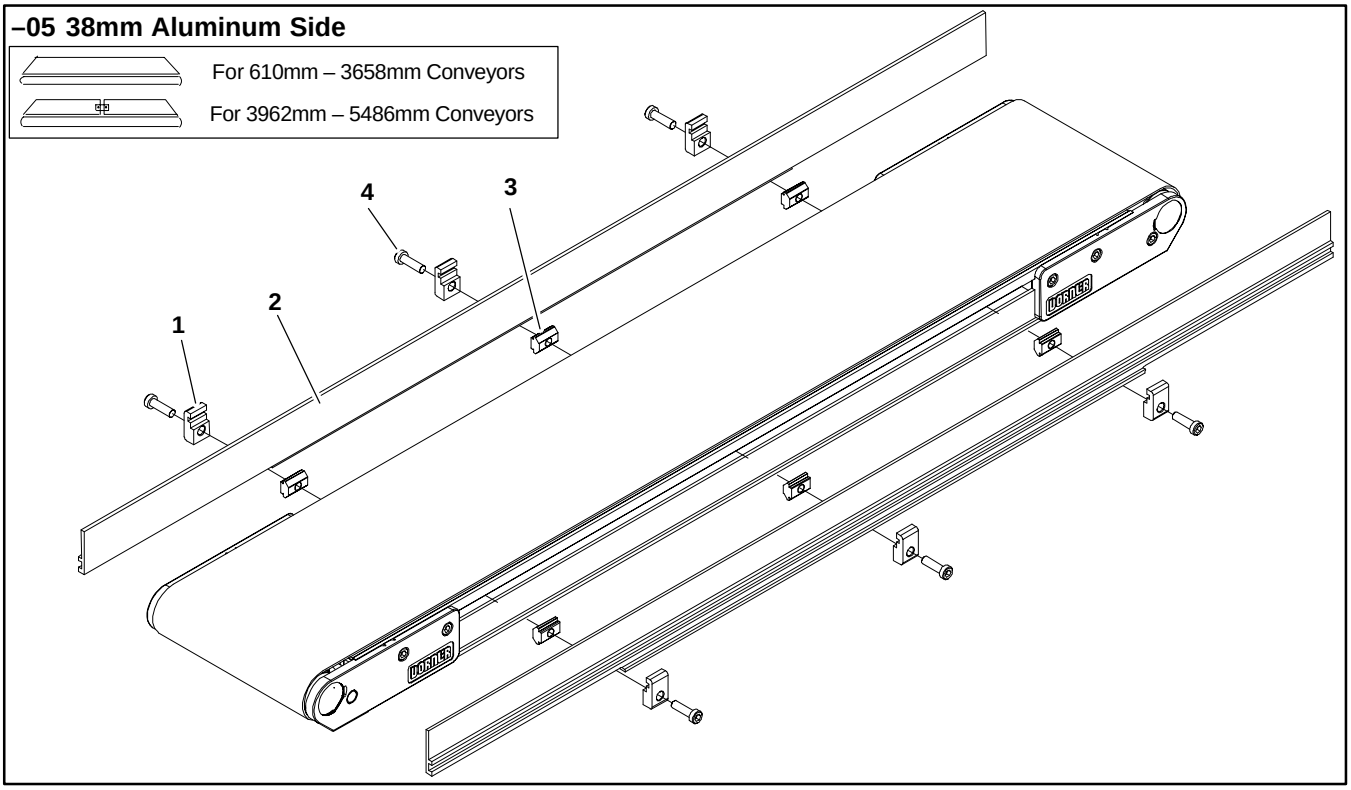

Item	Part Number	Description
1	200121	Guide Retaining Clip
2	See Chart Below	2200 Guide 13mm HS
3	639971M	Single Drop–in Tee Bar
4	920694M	Socket Head Screw M6 x 20mm

Item 2: 2200 Guide 13mm HS			
Length		End Guide	End Guide
610mm	Left Hand	280503–02400	N/A
	Right Hand	280503–02400	N/A
914mm	Left Hand	280503–03600	N/A
	Right Hand	280503–03600	N/A
1219mm	Left Hand	280503–04800	N/A
	Right Hand	280503–04800	N/A
1524mm	Left Hand	280503–06000	N/A
	Right Hand	280503–06000	N/A
1829mm	Left Hand	280503–07200	N/A
	Right Hand	280503–07200	N/A
2134mm	Left Hand	280503–08400	N/A
	Right Hand	280503–08400	N/A
2438mm	Left Hand	280503–09600	N/A
	Right Hand	280503–09600	N/A
2743mm	Left Hand	280503–10800	N/A
	Right Hand	280503–10800	N/A
3048mm	Left Hand	280503–12000	N/A
	Right Hand	280503–12000	N/A
3353mm	Left Hand	280503–13200	N/A
	Right Hand	280503–13200	N/A
3658mm	Left Hand	280503–14400	N/A
	Right Hand	280503–14400	N/A
3962mm	Left Hand	280501–07500	280501–08100
	Right Hand	280502–07500	280502–08100
4267mm	Left Hand	280501–07500	280501–09300
	Right Hand	280502–07500	280502–09300
4572mm	Left hand	280501–07500	280501–10500
	Right Hand	280502–07500	280502–10500
4877mm	Left Hand	280501–07500	280501–11700
	Right Hand	280502–07500	280502–11700
5182mm	Left Hand	280501–07500	280501–12900
	Right Hand	280502–07500	280502–12900
5486mm	Left Hand	280501–07500	280501–14100
	Right Hand	280502–07500	280502–14100
5791mm	Left Hand	280501–08100	280501–14700
	Right Hand	280502–08100	280502–14700
6096mm	Left Hand	280501–09300	280501–14700
	Right Hand	280502–09300	280502–14700
6401mm	Left Hand	280501–10500	280501–14700
	Right Hand	280502–10500	280502–14700
6706mm	Left Hand	280501–11700	280501–14700
	Right Hand	280502–11700	280502–14700
7010mm	Left Hand	280501–12900	280501–14700
	Right Hand	280502–12900	280502–14700
7315mm	Left Hand	280501–14100	280501–14700
	Right Hand	280502–14100	280502–14700

–07 Low to Side Wiper

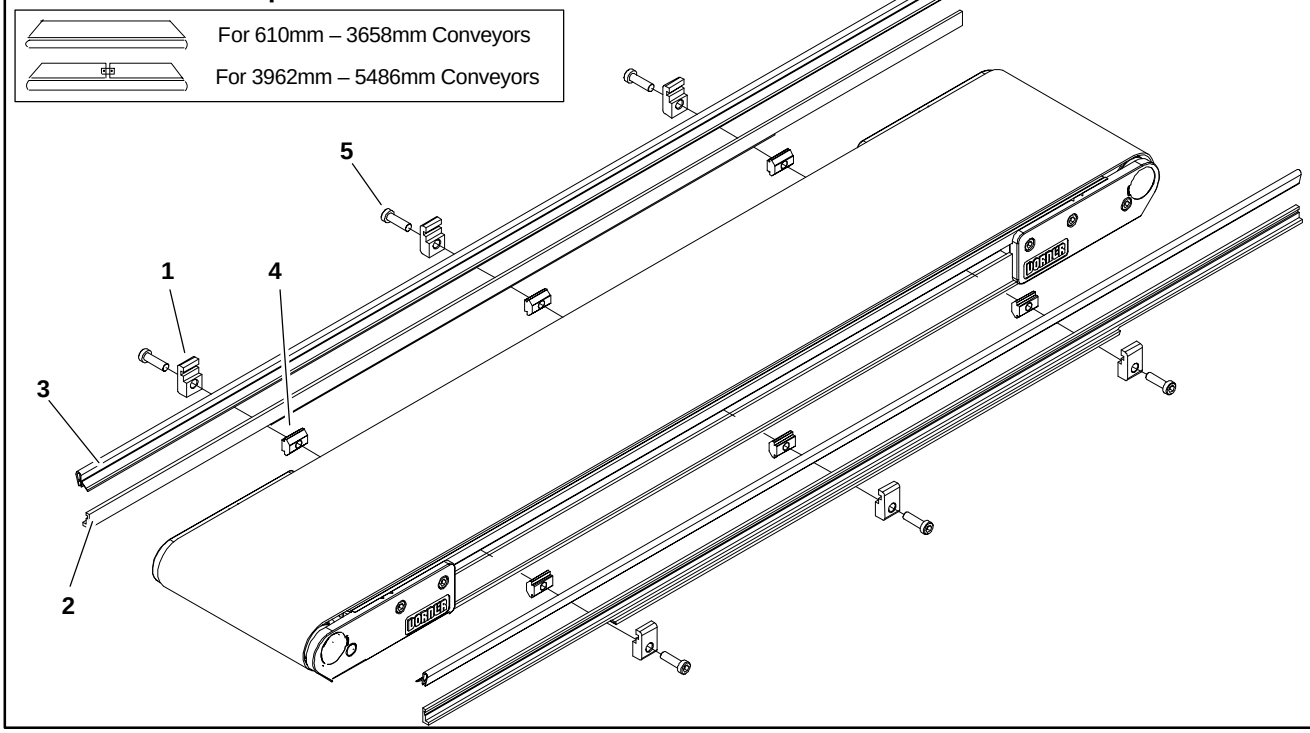

Item	Part Number	Description
1	200121	Guide Retaining Clip
2	See Chart Below	2200 Guide 13mm HS
3	41–00–24	Side Wiper Nylatron (per foot)
4	639971M	Single Drop–in Tee Bar
5	920694M	Socket Head Screw M6 x 20mm

Item 2: 2200 Guide 13mm HS			
Length		End Guide	End Guide
610mm	Left Hand	280903–02400	N/A
	Right Hand	280903–02400	N/A
914mm	Left Hand	280903–03600	N/A
	Right Hand	280903–03600	N/A
1219mm	Left Hand	280903–04800	N/A
	Right Hand	280903–04800	N/A
1524mm	Left Hand	280903–06000	N/A
	Right Hand	280903–06000	N/A
1829mm	Left Hand	280903–07200	N/A
	Right Hand	280903–07200	N/A
2134mm	Left Hand	280903–08400	N/A
	Right Hand	280903–08400	N/A
2438mm	Left Hand	280903–09600	N/A
	Right Hand	280903–09600	N/A
2743mm	Left Hand	280903–10800	N/A
	Right Hand	280903–10800	N/A
3048mm	Left Hand	280903–12000	N/A
	Right Hand	280903–12000	N/A
3353mm	Left Hand	280903–13200	N/A
	Right Hand	280903–13200	N/A
3658mm	Left Hand	280903–14400	N/A
	Right Hand	280903–14400	N/A
3962mm	Left Hand	280901–07500	280901–08100
	Right Hand	280902–07500	280902–08100
4267mm	Left Hand	280901–07500	280901–09300
	Right Hand	280902–07500	280902–09300
4572mm	Left hand	280901–07500	280901–10500
	Right Hand	280902–07500	280902–10500
4877mm	Left Hand	280901–07500	280901–11700
	Right Hand	280902–07500	280902–11700
5182mm	Left Hand	280901–07500	280901–12900
	Right Hand	280902–07500	280902–12900
5486mm	Left Hand	280901–07500	280901–14100
	Right Hand	280902–07500	280902–14100
5791mm	Left Hand	280901–08100	280901–14700
	Right Hand	280902–08100	280902–14700
6096mm	Left Hand	280901–09300	280901–14700
	Right Hand	280902–09300	280902–14700
6401mm	Left Hand	280901–10500	280901–14700
	Right Hand	280902–10500	280902–14700
6706mm	Left Hand	280901–11700	280901–14700
	Right Hand	280902–11700	280902–14700
7010mm	Left Hand	280901–12900	280901–14700
	Right Hand	280902–12900	280902–14700
7315mm	Left Hand	280901–14100	280901–14700
	Right Hand	280902–14100	280902–14700

–09 Low to High Side

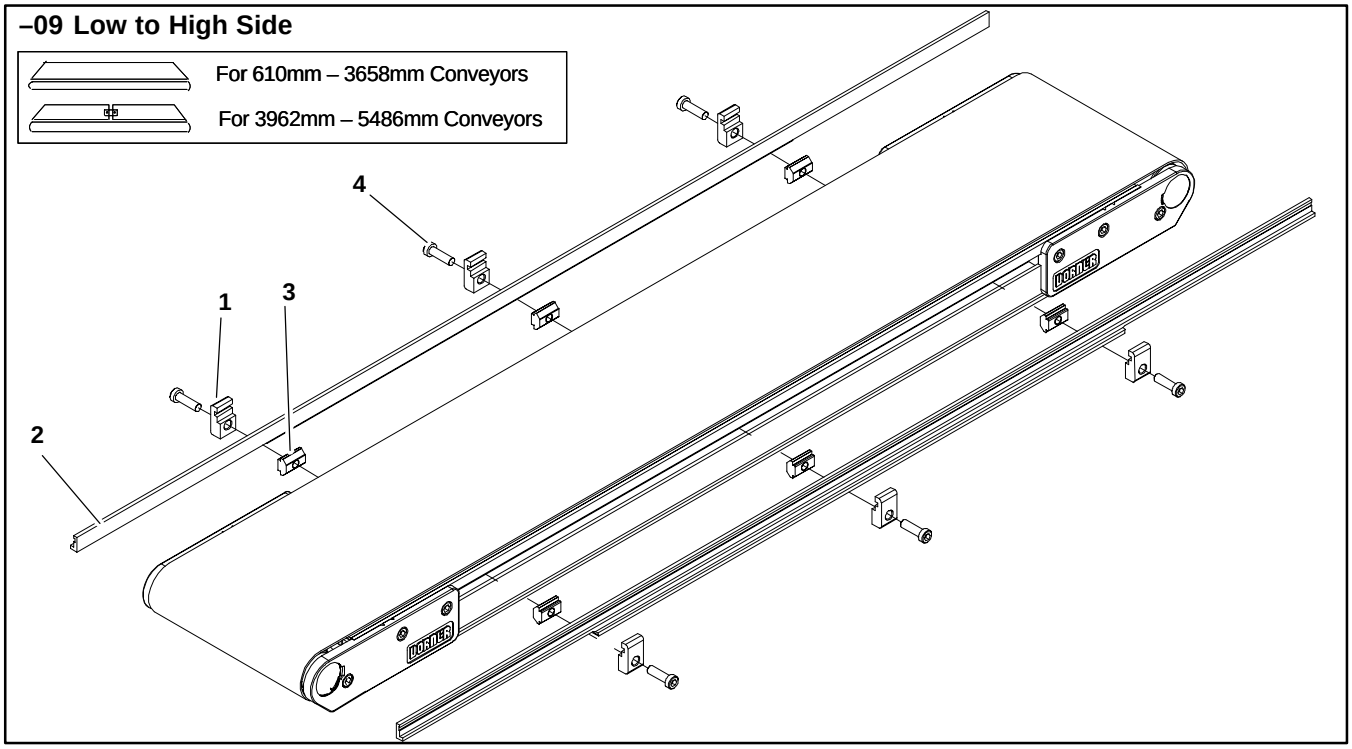

Item	Part Number	Description
1	200121	Guide Retaining Clip
2	See Chart Below	2200 Guide 13mm HS
3	639971M	Single Drop–in Tee Bar
4	920694M	Socket Head Screw M6 x 20mm

Item 2: 2200 Guide 13mm HS			
Length		End Guide	End Guide
610mm	Left Hand	280903–02400	N/A
	Right Hand	280903–02400	N/A
914mm	Left Hand	280903–03600	N/A
	Right Hand	280903–03600	N/A
1219mm	Left Hand	280903–04800	N/A
	Right Hand	280903–04800	N/A
1524mm	Left Hand	280903–06000	N/A
	Right Hand	280903–06000	N/A
1829mm	Left Hand	280903–07200	N/A
	Right Hand	280903–07200	N/A
2134mm	Left Hand	280903–08400	N/A
	Right Hand	280903–08400	N/A
2438mm	Left Hand	280903–09600	N/A
	Right Hand	280903–09600	N/A
2743mm	Left Hand	280903–10800	N/A
	Right Hand	280903–10800	N/A
3048mm	Left Hand	280903–12000	N/A
	Right Hand	280903–12000	N/A
3353mm	Left Hand	280903–13200	N/A
	Right Hand	280903–13200	N/A
3658mm	Left Hand	280903–14400	N/A
	Right Hand	280903–14400	N/A
3962mm	Left Hand	280901–07500	280901–08100
	Right Hand	280902–07500	280902–08100
4267mm	Left Hand	280901–07500	280901–09300
	Right Hand	280902–07500	280902–09300
4572mm	Left hand	280901–07500	280901–10500
	Right Hand	280902–07500	280902–10500
4877mm	Left Hand	280901–07500	280901–11700
	Right Hand	280902–07500	280902–11700
5182mm	Left Hand	280901–07500	280901–12900
	Right Hand	280902–07500	280902–12900
5486mm	Left Hand	280901–07500	280901–14100
	Right Hand	280902–07500	280902–14100
5791mm	Left Hand	280901–08100	280901–14700
	Right Hand	280902–08100	280902–14700
6096mm	Left Hand	280901–09300	280901–14700
	Right Hand	280902–09300	280902–14700
6401mm	Left Hand	280901–10500	280901–14700
	Right Hand	280902–10500	280902–14700
6706mm	Left Hand	280901–11700	280901–14700
	Right Hand	280902–11700	280902–14700
7010mm	Left Hand	280901–12900	280901–14700
	Right Hand	280902–12900	280902–14700
7315mm	Left Hand	280901–14100	280901–14700
	Right Hand	280902–14100	280902–14700

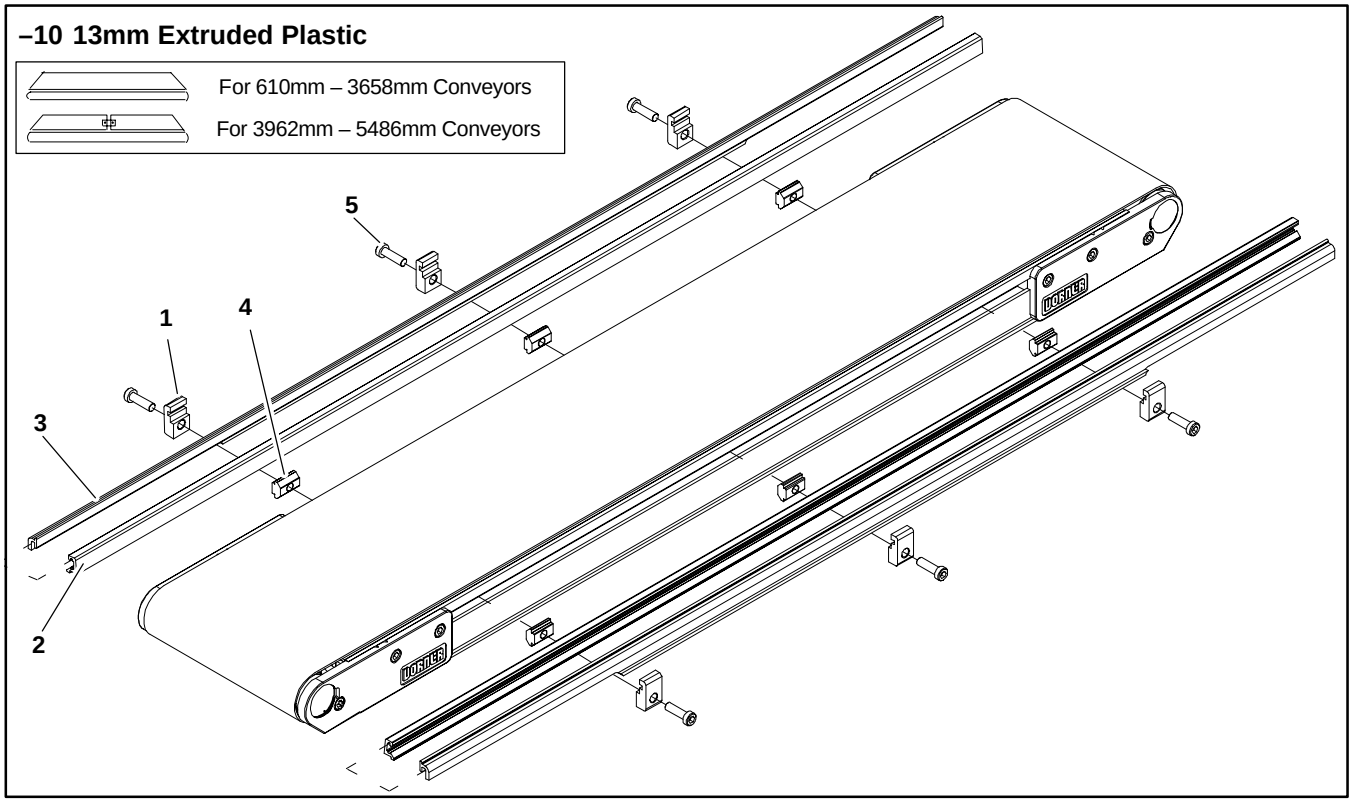

Item	Part Number	Description
1	200121	Guide Retaining Clip
2	200054P	Snap–On Guide (per foot)
3	See Chart Below	2200 Guide
4	639971M	Single Drop–in Tee Bar
5	920694M	Socket Head Screw M6 x 20mm

Item 3: 2200 Guide

Length		End Guide	End Guide
610mm	Left Hand	281003–02400	N/A
	Right Hand	281003–02400	N/A
914mm	Left Hand	281003–03600	N/A
	Right Hand	281003–03600	N/A
1219mm	Left Hand	281003–04800	N/A
	Right Hand	281003–04800	N/A
1524mm	Left Hand	281003–06000	N/A
	Right Hand	281003–06000	N/A
1829mm	Left Hand	281003–07200	N/A
	Right Hand	281003–07200	N/A
2134mm	Left Hand	281003–08400	N/A
	Right Hand	281003–08400	N/A
2438mm	Left Hand	281003–09600	N/A
	Right Hand	281003–09600	N/A
2743mm	Left Hand	281003–10800	N/A
	Right Hand	281003–10800	N/A
3048mm	Left Hand	281003–12000	N/A
	Right Hand	281003–12000	N/A
3353mm	Left Hand	281003–13200	N/A
	Right Hand	281003–13200	N/A
3658mm	Left Hand	281003–14400	N/A
	Right Hand	281003–14400	N/A
3962mm	Left Hand	281001–07500	281001–08100
	Right Hand	281002–07500	281002–08100
4267mm	Left Hand	281001–07500	281001–09300
	Right Hand	281002–07500	281002–09300
4572mm	Left hand	281001–07500	281001–10500
	Right Hand	281002–07500	281002–10500
4877mm	Left Hand	281001–07500	281001–11700
	Right Hand	281002–07500	281002–11700
5182mm	Left Hand	281001–07500	281001–12900
	Right Hand	281002–07500	281002–12900
5486mm	Left Hand	281001–07500	281001–14100
	Right Hand	281002–07500	281002–14100
5791mm	Left Hand	281001–08100	281001–14700
	Right Hand	281002–08100	281002–14700
6096mm	Left Hand	281001–09300	281001–14700
	Right Hand	281002–09300	281002–14700
6401mm	Left Hand	281001–10500	281001–14700
	Right Hand	281002–10500	281002–14700
6706mm	Left Hand	281001–11700	281001–14700
	Right Hand	281002–11700	281002–14700
7010mm	Left Hand	281001–12900	281001–14700
	Right Hand	281002–12900	281002–14700
7315mm	Left Hand	281001–14100	281001–14700
	Right Hand	281002–14100	281002–14700

–13 Adjustable Guiding

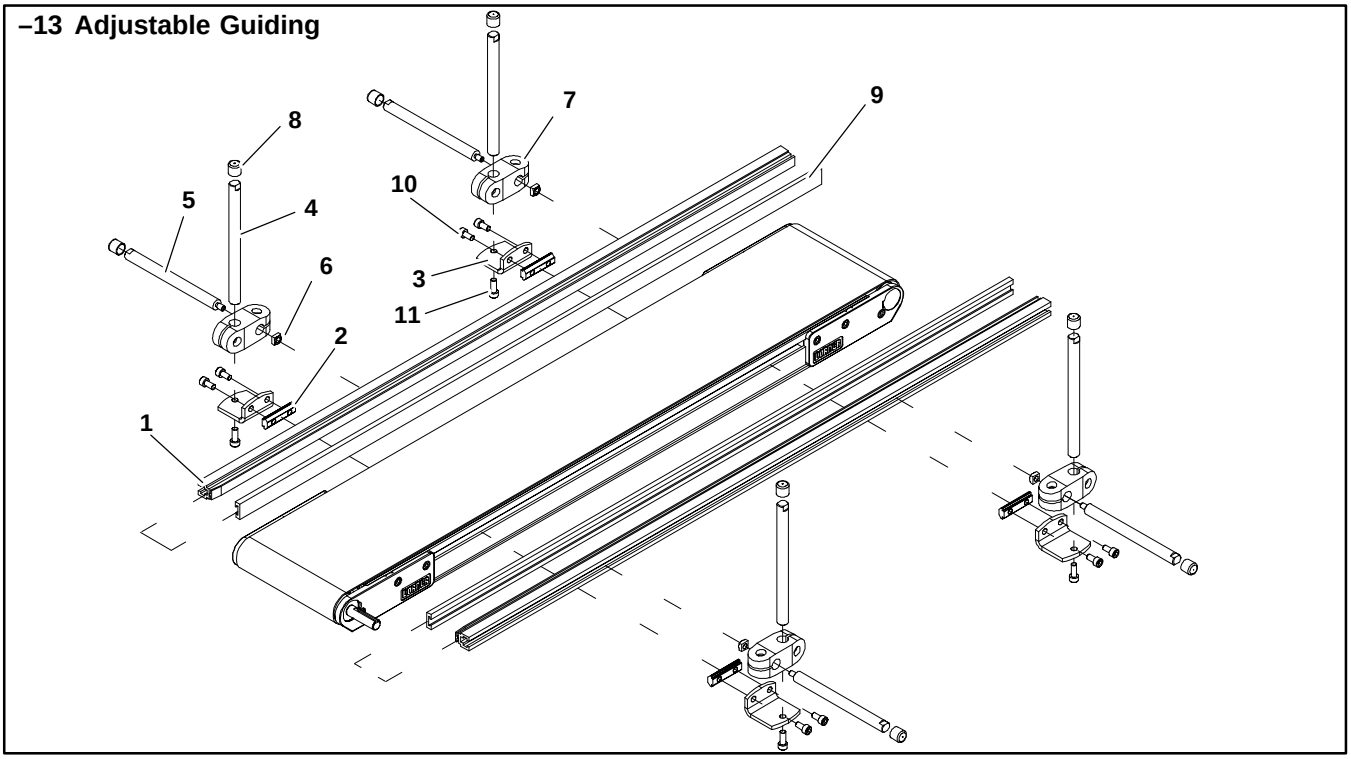

Item	Part Number	Description
1	202983	Aluminum Profile Guide 610mm
	202984	Aluminum Profile Guide 914mm
	202985	Aluminum Profile Guide 1219mm
	202986	Aluminum Profile Guide 1524mm
	202987	Aluminum Profile Guide 1829mm
	202988	Aluminum Profile Guide 2134mm
	202989	Aluminum Profile Guide 2438mm
	202990	Aluminum Profile Guide 2743mm
	202991	Aluminum Profile Guide 3048mm
	202992	Aluminum Profile Guide 3353mm
	202993	Aluminum Profile Guide 3658mm
	202994	Aluminum Profile Guide 3962mm
2	200830M	Drop–In Tee Bar

3	202004	Mounting Bracket
4	202027M	Guide Mounting Shaft Vertical
5	202028M	Guide Moutning Shaft Horizontal
6	674175MP	Square Nut
7	807–652	Cross Block
8	807–948	Vinyl Shaft Cap
9	614068P	Flat Extruded Guide (per foot)
10	920612M	Socket Head Screw M6 x 12mm
11	920616M	Socket Head Screw M6 x 16mm

Flared Side Guiding

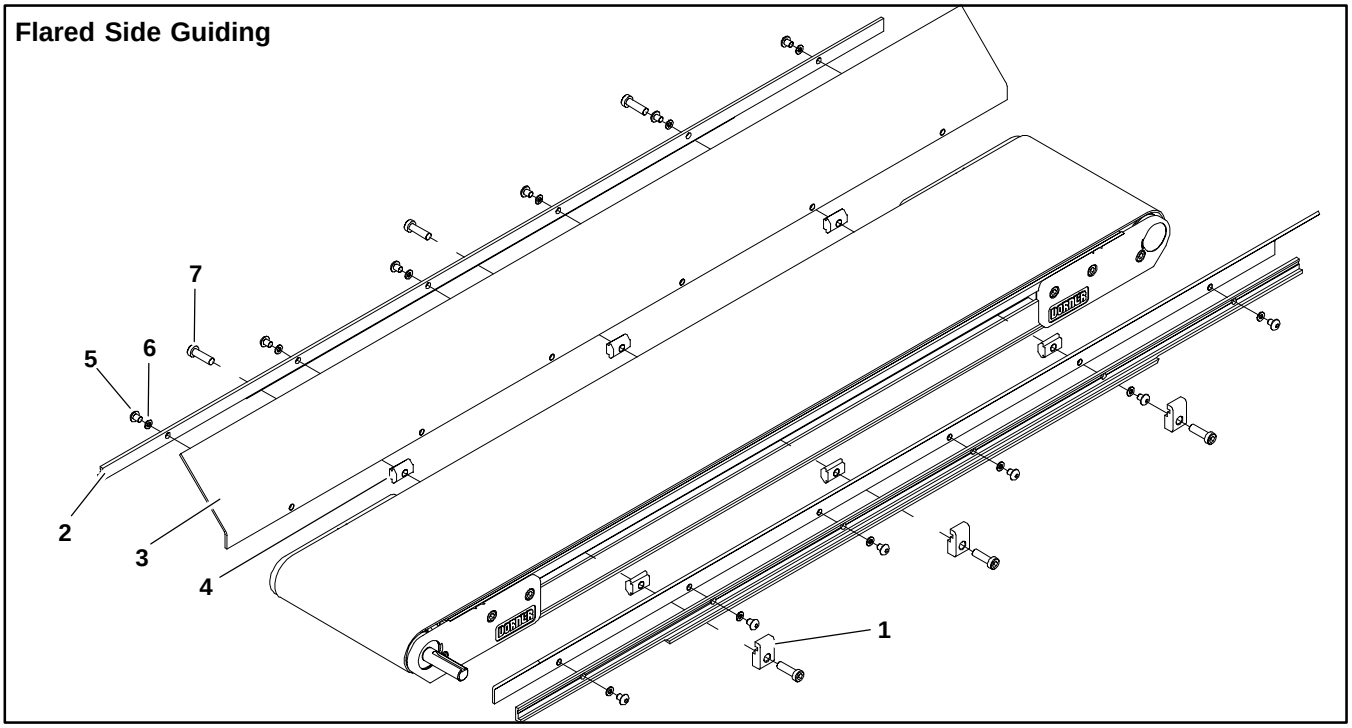

Item	Part Number	Description
1	200121	Guide Retaining Clip
2	202212	Side–Flare Mounting Guide 610mm
	202213	Side–Flare Mounting Guide 914mm
	202214	Side–Flare Mounting Guide 1219mm
	202215	Side–Flare Mounting Guide 1524mm
	202216	Side–Flare Mounting Guide 1829mm

3	202522M	Flared Guide 45° 610mm
	202523M	Flared Guide 45° 914mm
	202523M	Flared Guide 45° 1219mm
	202523M	Flared Guide 45° 1524mm
	202523M	Flared Guide 45° 1829mm
4	639971	Drop–InTee Bar
5	910506M	Button Head Screw M5 x 6mm
6	911–512	Washer
7	920694M	Cap Low–Head Screw M6 x 20mm

Connecting Assembly without Stand Mount

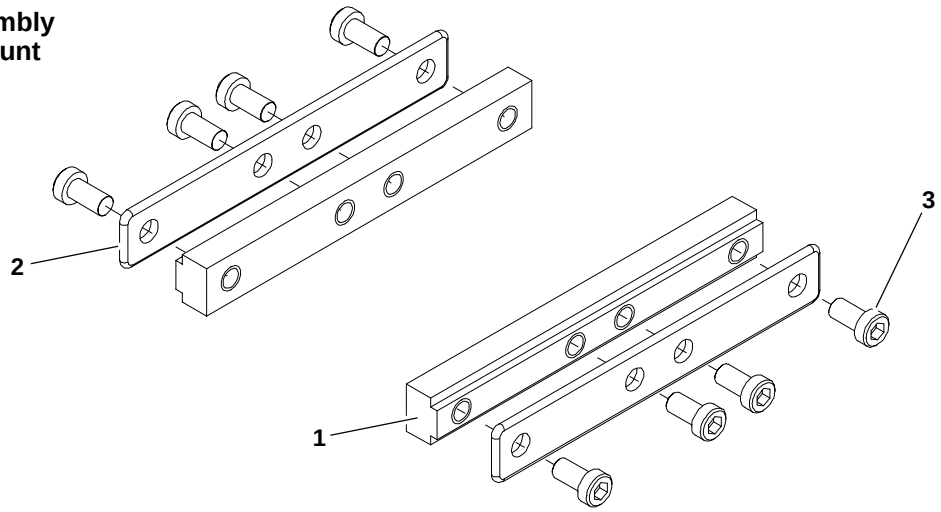

Item	Part Number	Description
1	240849	Frame Bar Connector, SAE
	240331	Frame Bar Connector, Metric

2	300153M	Intermediate Clamp Plate
3	901–129	Button Head Screw 1/4–20 x .50”
	920692M	Socket Head Screw M6 x 12mm

Flat Belt Mounting Bracket with Return Roller

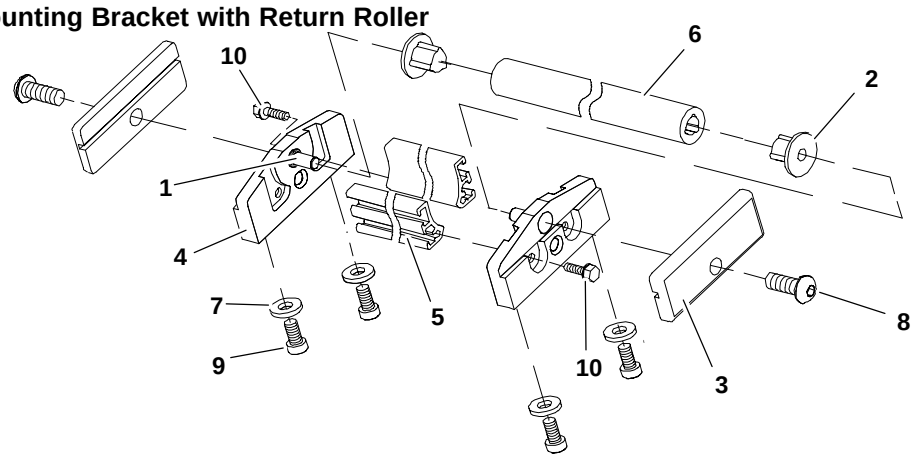

Item	Part Number	Description
1	202348P	Bearing Pin
2	202311P	Return Roller Bearing
3	200022	Stand Clamp Plate, SAE
	200022M	Stand Clamp Plate, Metric
4	202351	Return Roller Mounting Block, SAE
	202351M	Return Roller Mounting Block, Metric
5	207802	Return Roller Guard 44mm
	207803	Return Roller Guard 70mm
	207804	Return Roller Guard 95mm
	207805	Return Roller Guard 127mm
	207806	Return Roller Guard 152mm
	207808	Return Roller Guard 203mm
	207810	Return Roller Guard 254mm
	207812	Return Roller Guard 305mm
	207818	Return Roller Guard 457mm
	207821	Return Roller Guard 533mm
	207824	Return Roller Guard 610mm

6	207702	Return Roller Tube, 44mm
	207703	Return Roller Tube, 70mm
	207704	Return Roller Tube, 95mm
	207705	Return Roller Tube, 127mm
	207706	Return Roller Tube, 152mm
	207708	Return Roller Tube, 203mm
	207710	Return Roller Tube, 254mm
	207712	Return Roller Tube, 305mm
	207718	Return Roller Tube, 457mm
	207721	Return Roller Tube, 533mm
	207724	Return Roller Tube, 610mm
7	605279P	Hard Washer .281 x .620 x .120
8	901–181	Button Head Screw 5/16 x .62”
	910816M	Button Head Screw M8 x 16mm
9	902–132	Socket Head Screw 1/4 x .75“
	920618M	Socket Head Screw M6 x 18mm
10	960498M	Hex Head Screw M/4 x 12mm

Conveyor Belt Part Number Configuration

Flat Belt Conveyor Model Number **2150 U WW LL A PP / BB**

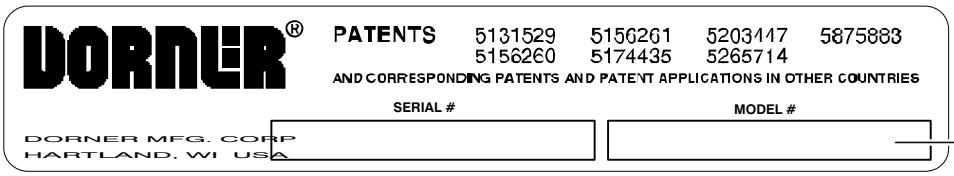

Figure 50

Flat Belt Part Number Configuration

Refer to Dorner patent plate (Figure 50). From the model number, determine conveyor width (“WW”), length (“LL”) and belt type (“BB”). Use data to configure belt part number as indicated below.

21 - WW LL / BB

21 – __ __ (Fill In) __ __ **/** __ __

Return Policy

No returns will be accepted without prior written factory authorization. When calling for authorization, please have the following information ready for the Dorner Factory representative or your local distributor:

1. Name and address of customer.
2. Item(s) being returned.
3. Reason for return.
4. Customer's original order number used when ordering the item(s).
5. Dorner or distributor invoice number.

A representative will discuss action to be taken on the Returned items and provide a Returned Goods Authorization Number to reference.

There will be a 15% restocking charge on all new items returned for credit where Dorner was not at fault. These will not be accepted after 60 days from original invoice date. The restocking charge covers inspection, cleaning, disassembly, and reissuing to inventory.

If a replacement is needed prior to evaluation of returned item, a purchase order must be issued. Credit (if any) is issued only after return and evaluation is complete.

Dorner has representatives throughout the world. Feel free to contact Dorner for the name of your local representative. Our technical sales and service staff will gladly help with your questions on Dorner products.

For a copy of Dorner's Limited Warranty, contact factory, distributor, service center or visit our website @ www.dorner.com

For replacement parts, contact an authorized Dorner Service Center or the factory.

Dorner Mfg. Corp. reserves the right to change or discontinue products without notice. All products and services are covered in accordance with our standard warranty. All rights reserved. ©Dorner Mfg. Corp. 2000

DORNER MFG. CORP.
975 Cottonwood Ave. PO Box 20
Hartland, WI 53029-0020 USA
USA
TEL 1-800-397-8664 (USA)
FAX 1-800-369-2440 (USA)
Outside the USA:
TEL 1-262-367-7600, FAX 1-262-367-5827

DORNER
Arnold-Sommerfeld-Ring 2
D-52499 Baesweiler
Germany
TEL (02401) 80 52 90
FAX (02401) 80 52 93

Internet: www.dorner.com