ENGINEERING MANUAL

Superior V-Guided Belt Tracking

High Speeds - Up to 600 fpm

Fast & Simple to Use Online Configurator

Industry-Best Product Transfers

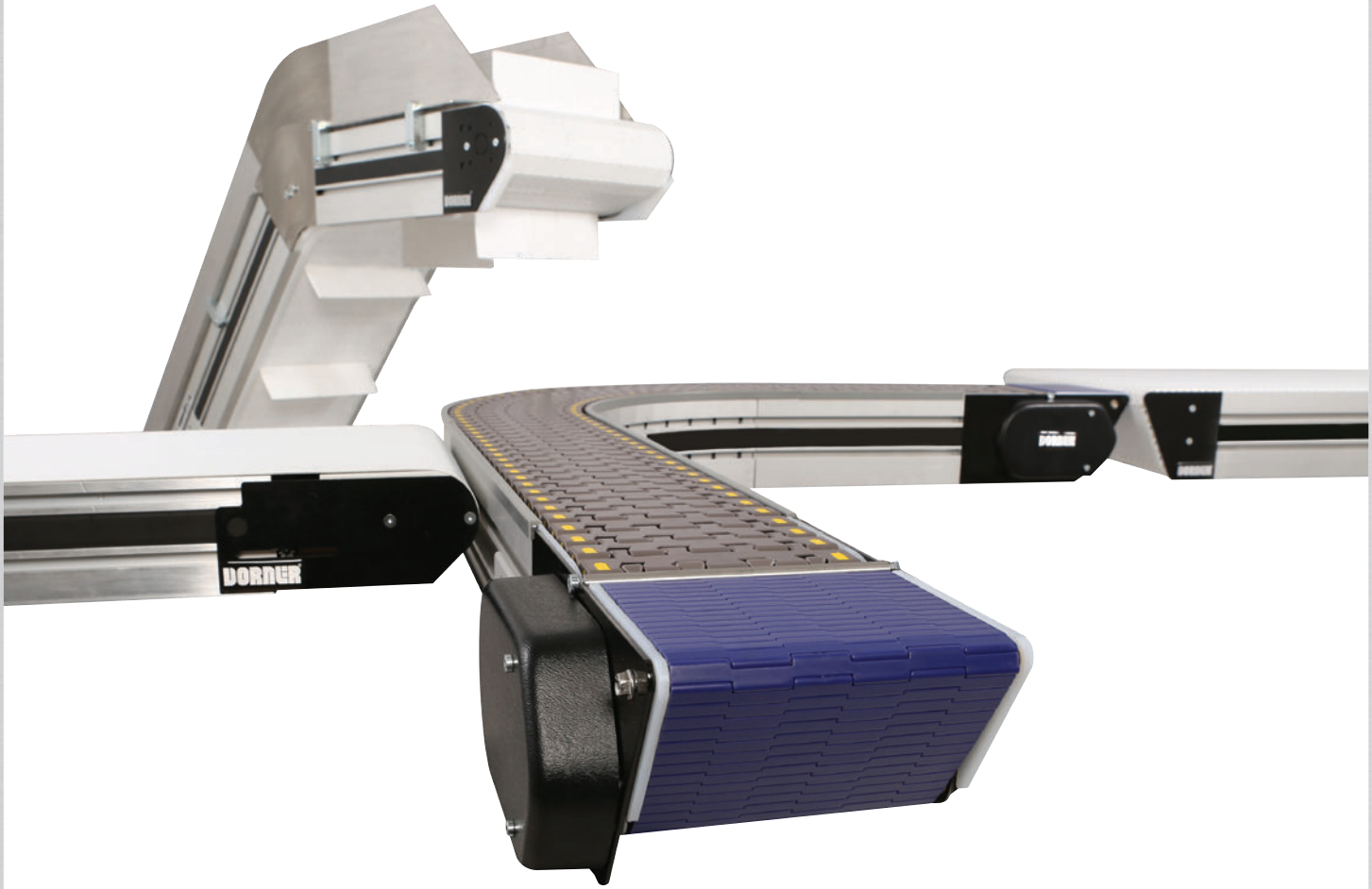

3200 SERIES CONVEYORS

Heavy Duty, Low Maintenance Fabric & Modular Belt Conveyors

DORNER®
By Columbus McKinnon

Powered Transfers

- Provides smooth, worry-free transfer of parts as small as 76 mm (3 in) in diameter, even on curves

High Performance Bearing Style Curve Design

- Provides the capability of complex conveyor shapes with up to 4 corner modules

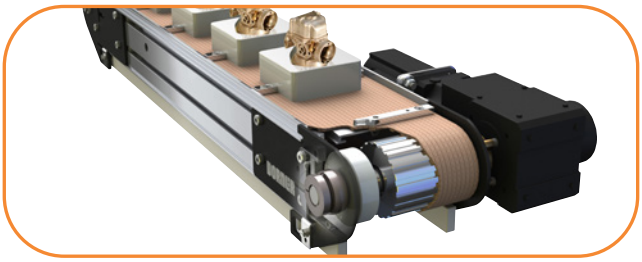

Precision Move Conveyors

- Accurate part location of up to .25 mm (.010 in) in belt widths up to 457.2 mm (18 in) wide

iDRIVE

- The industry's most compact internal drive for 24/7 operation in conveyors as narrow as 152.4 mm (6 in) wide

Flush Side Frames

- All bearings and components located inside conveyor frame for flat sided tails that fit in tight spaces

V-Guided Belt Tracking

- Superior V-Guided belting eliminates the need for tracking adjustments

The Benefits of a Dorner 3200 Series Conveyor

Low Maintenance

- Dorner's industry best V-Guiding provides positive belt tracking, even under demanding side load applications
- Modular belts and spliced standard belts allow for quick belt changing, reducing downtime
- Precise rack and pinion belt tensioning
- Sealed for life bearings

Time Saving

- Dorner's online configurator engineers simple or complex conveyors to meet your needs in minutes
- The industry leading tool delivers a complete 3D CAD assembly model for instant validation of fit
- Dorner provides the industry's fastest deliveries

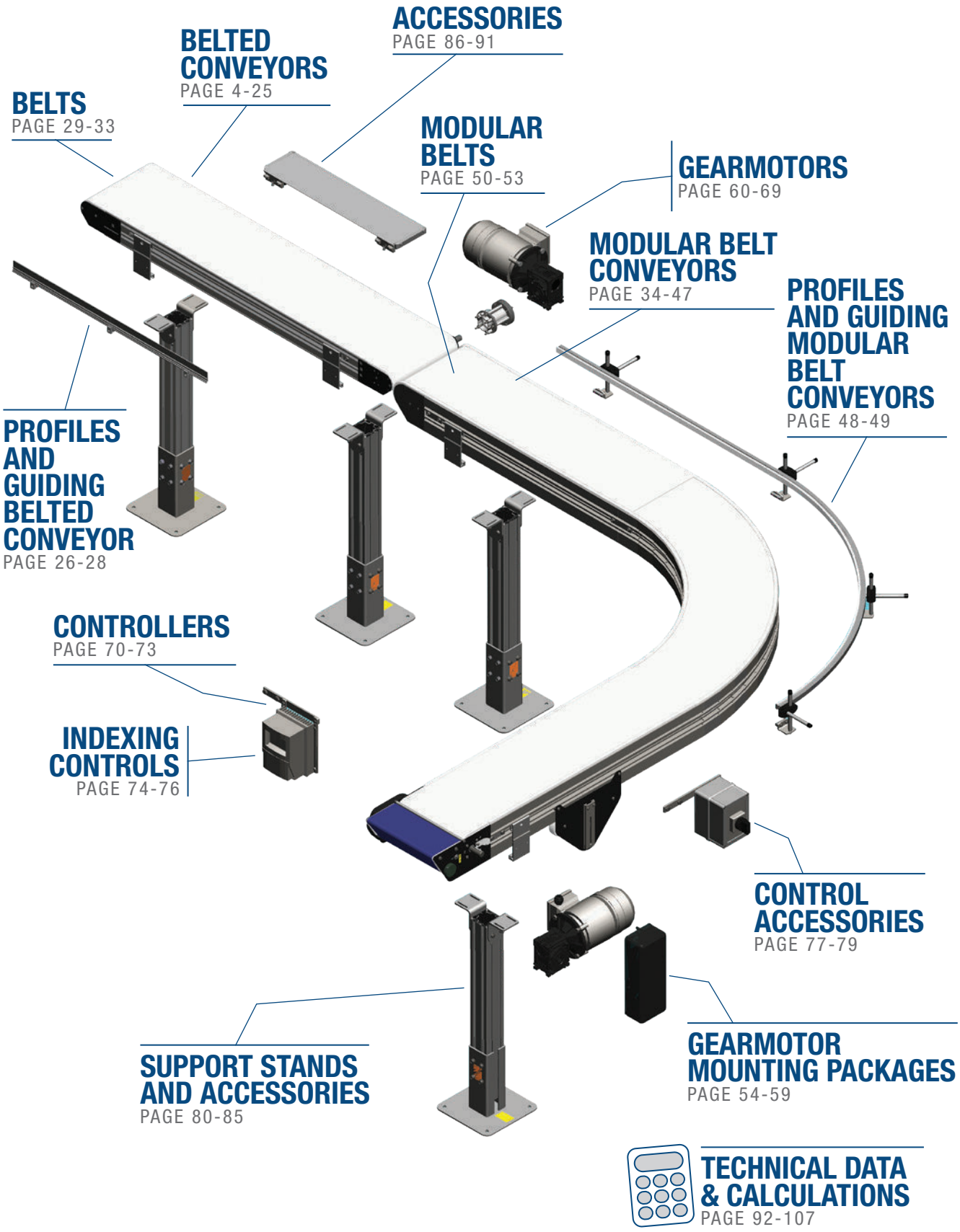
ACCESSORIES
PAGE 86-91
BELTED CONVEYORS
PAGE 4-25
BELTS
PAGE 29-33
MODULAR BELTS
PAGE 50-53
GEARMOTORS
PAGE 60-69
MODULAR BELT CONVEYORS
PAGE 34-47
PROFILES AND GUIDING MODULAR BELT CONVEYORS
PAGE 48-49
PROFILES AND GUIDING BELTED CONVEYOR
PAGE 26-28
CONTROLLERS
PAGE 70-73
INDEXING CONTROLS
PAGE 74-76
CONTROL ACCESSORIES
PAGE 77-79
GEARMOTOR MOUNTING PACKAGES
PAGE 54-59
SUPPORT STANDS AND ACCESSORIES
PAGE 80-85
TECHNICAL DATA & CALCULATIONS
PAGE 92-107

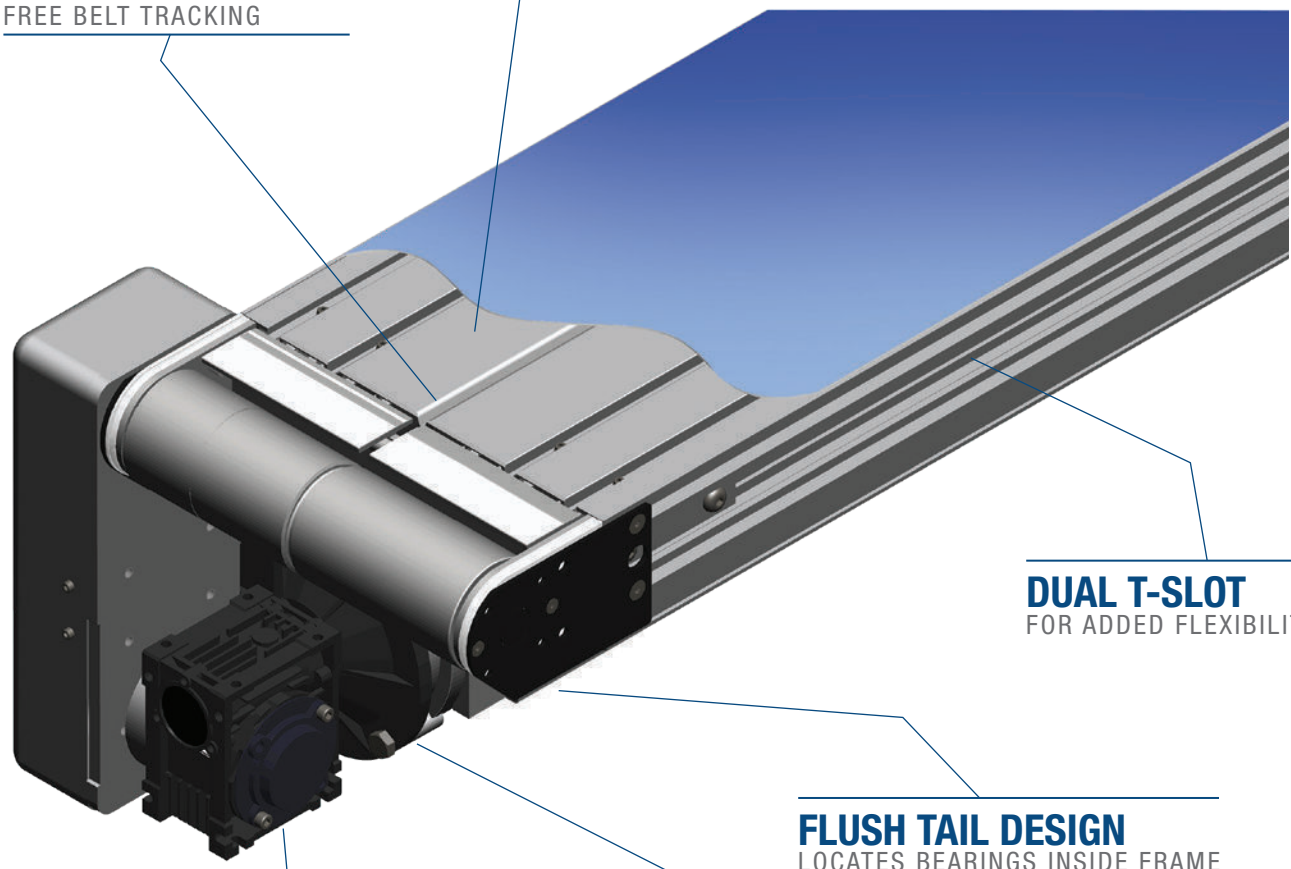

HARD ANODIZED ALUMINUM BEDPLATE
PROVIDES DURABILITY WITHOUT ADDING WEIGHT

URETHANE BELTING
FOR LONG LIFE AND VIRTUALLY INVISIBLE BELT SPLICE

V-GROOVED ROLLER FRAMES, AND V-GUIDED BELTS
PROVIDE MAINTENANCE FREE BELT TRACKING

DUAL T-SLOT
FOR ADDED FLEXIBILITY

FLUSH TAIL DESIGN
LOCATES BEARINGS INSIDE FRAME TO FIT IN TIGHT SPACES

eDRIVE®
LOW INERTIA MOTOR WITH ALUMINUM BODY PROVIDES LOW TEMPERATURE IN SMALL PACKAGE

eDRIVE®
SEALED FOR LIFE ALUMINUM BODY GEARBOXES FOR REDUCED TEMPERATURE AND LOCATION FLEXIBILITY

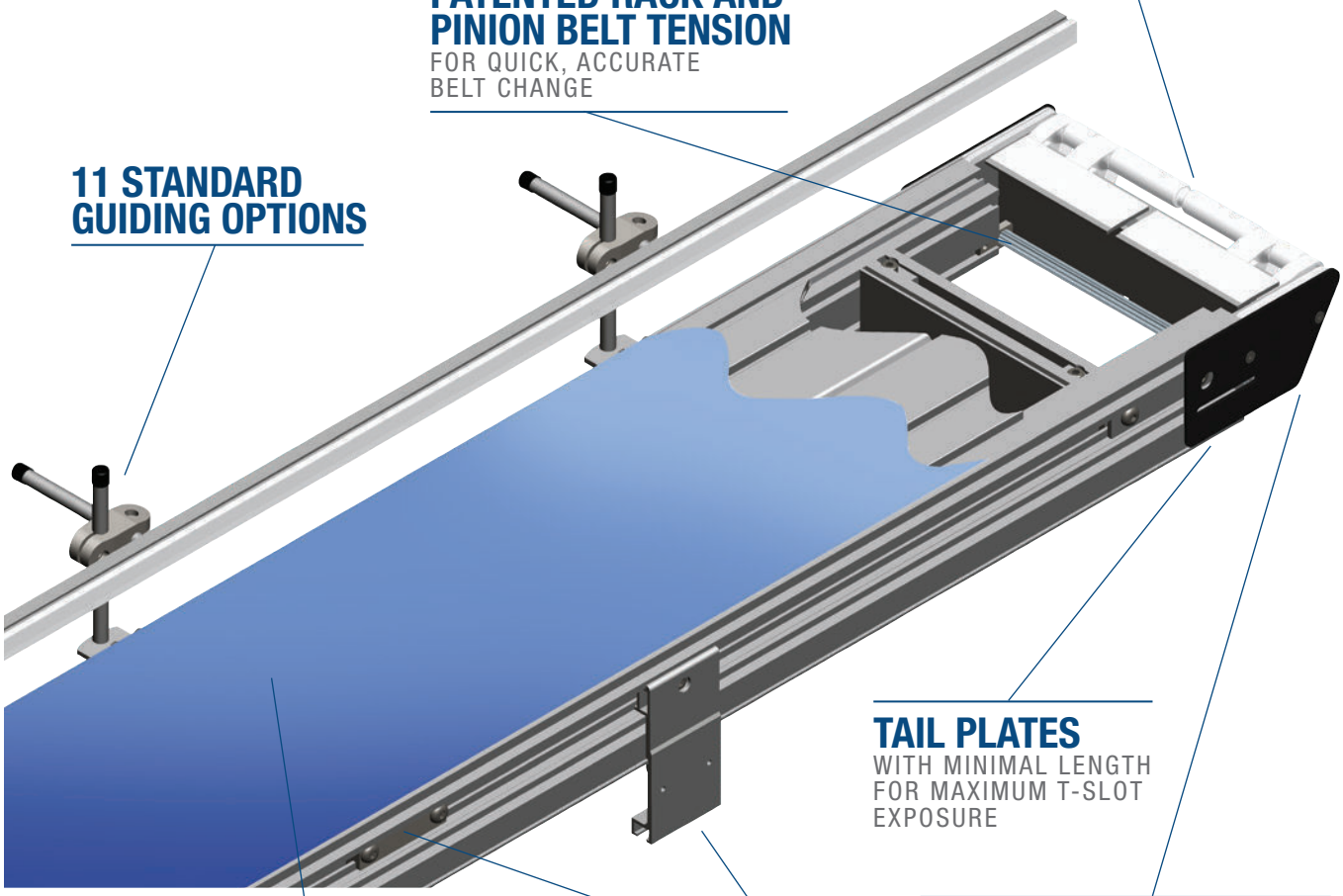

NOSEBAR IDLER TAILS WITH V-GUIDE TRACKING

PATENTED RACK AND PINION BELT TENSION

FOR QUICK, ACCURATE BELT CHANGE

11 STANDARD GUIDING OPTIONS

TAIL PLATES

WITH MINIMAL LENGTH FOR MAXIMUM T-SLOT EXPOSURE

NOSEBAR IDLER TAILS

SLEEK, YET DURABLE WITH 20MM DIAMETER

40 STANDARD BELTING OPTIONS

IN-BOARD TYPE FRAME

CONNECTION JOINTS IMPROVE STRENGTH WHILE KEEPING T-SLOTS OPEN

STAND MOUNTS

LOCK INTO THE FRAME FOR STRENGTH AND DURABILITY YET MOVABLE ANYWHERE ALONG FRAME LENGTH

Specifications

- Loads up to 181 kg (400 lbs)*
- Belt speeds up to 183 m/min (600 ft/min)
- Belt widths: 95 to 1,219 mm (3.75 to 48 in)
- Conveyor lengths: 914 to 12,192 mm (36 to 40 ft)
- 41 mm (1.62 in) of belt take-up on conveyors up to 6 m (20 ft) long
- 82 mm (3.24 in) of belt take-up on conveyors over 6 m (20 ft) long
- 76 mm (3 in) diameter drive pulley turns approximately 246 mm (9.7 in) of belt per revolution
- V-groove bedplate with guided belt provides positive belt tracking, even under demanding side load applications
- Belt take-up indicator allows for quick reading of remaining belt life

OPTIONAL: Rib Top Belt

For moving product lanes (see page 29).

OPTIONAL: Nose Bar Tail

Includes sealed bearings, 20 mm (0.79 in) diameter rollers and is available at idler end for small part transfers.

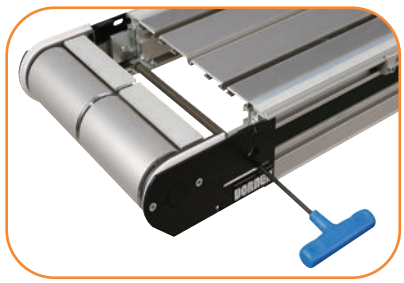

STANDARD FEATURE: Rack and Pinion

Allows the tail section to be easily slid back for quick belt removal.

3200 Series Flat Belt End Drive Conveyor

32 E D M W W - L L L L 1 0 1 A P P P P B B - S S S S

- **Rib Belt Center Line Spacing:** SS.SS in inches (if equipped)
- **Belt Type**
- **Profile (D side)**
- **Profile (A side)**
- **Drive Shaft Position:** A, B, C or D
- **Idler Tail Type:** **0** = Standard 76 mm (3 in) , **1** = Nosebar, **2** = 76 mm (3 in) with A-Side output shaft, **3** = 76 mm (3 in) with D-Side output shaft
- **Drive Tail Type:** **0** = Standard 76 mm (3 in) , **1** = Dual output shaft
- **V-guide & Mounting Bracket Options:**
  - **1** = Non V-guided belt, conveyor to include mounting brackets
  - **2** = V-guided belt, conveyor to include mounting brackets
  - **3** = Non V-guided belt, conveyor not to include mounting brackets
  - **4** = V-guided belt, conveyor not to include mounting brackets
  - **5** = Non V-guided belt, conveyor not to include mounting brackets, with returns
  - **6** = V-guide belt, conveyor not to include mounting brackets, with returns
- **Conveyor Length Reference:** LL.LL in feet
- **Conveyor Width Reference**
- **Documentation Language:** **M** = US, **U** = Europe

* Conveyor load capacity depends on conveyor size, incline, motor position, accumulated loads and other factors.

Order gearmotor mounting packages and gearmotors separately, see pages 54-69.
For support stands and accessories, see page 80-85.

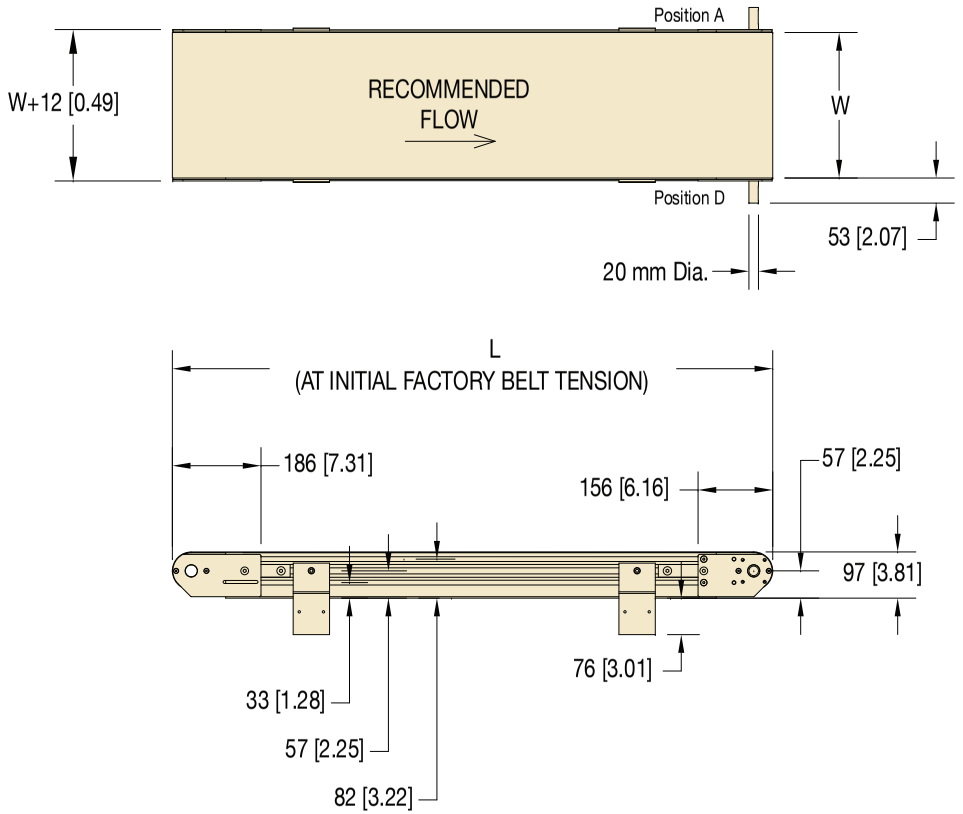

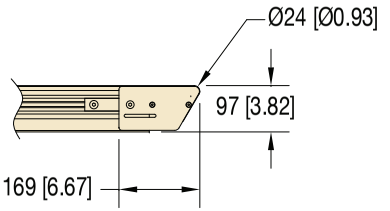

OPTIONAL NOSE BAR TRANSFER

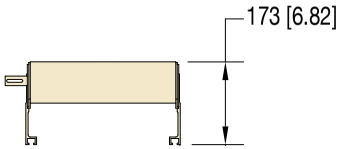

W = Conveyor Belt Width **Dim** = mm (in)

Standard Sizes				
Conveyor Width Reference	04	06	02 increments **up to...**	48
Conveyor Belt Width (W)	95 mm (3.75 in)	152 mm (6 in)	51mm (2 in) increments **up to...**	1,219 mm (48 in)
Conveyor Length Reference	0250		0001 increments **up to...**	4000
Conveyor Length (L)	914 mm (36 in)		3mm (0.12 in) increments **up to...**	12,192 mm (40 ft)

NOTE: Conveyor longer than 3,658 mm) (12 ft) will be constructed using a multiple piece frame. Consult factory for locations.
NOTE: Conveyors wider than 1016 mm (40 in) require v-guide belt tracking.

Drive Shaft Position

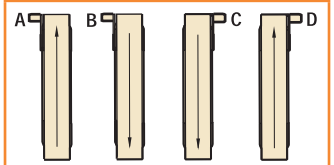

Since belts are being pulled, positions A & D are preferred. Pushing belts (B & C) reduce conveyor load capacity by approximately 66%.

Specifications

- Loads up to 455 kg (1,000 lbs)*
- Belt speeds up to 183 m/min (600 ft/min)
- Belt widths: 95 to 1,219 mm (3.75 to 48 in)
- Conveyor lengths: 1,219 to 30,175 mm (48 in to 99 ft)
- 406 mm (16 in) of belt take-up
- 152 mm (6 in) diameter drive pulley turns approximately 479 mm (18.8 in) of belt per revolution
- Center drive module frees up both ends of conveyor for operator and machine interface
- The center drive module can be easily repositioned along the length of the conveyor
- Maintenance-free pneumatic belt tensioner maintains uniform belt tension (Manual spring tension available)

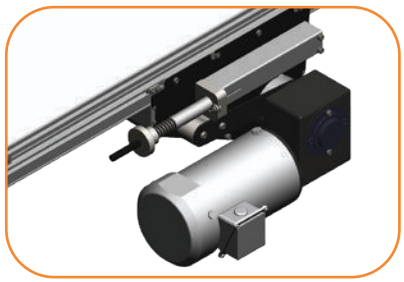

OPTIONAL: Spring Belt Take-up

Provides automatic belt take-up without the need for shop air.

OPTIONAL: Nose Bar Tail

Includes sealed bearings, 20 mm (0.79 in) diameter rollers and is available at both ends for small part transfers.

3200 Series Flat Belt Center Drive Conveyor

32 C D M W W - L L L L 1 P 0 1 A P P P P B B

- **Belt Type**
- **Profile (D side)**
- **Profile (A side)**
- **Drive Shaft Position:** **A, B, C or D**
- **Infeed Tail Type:** **0** = Standard 76 mm (3 in) , **1** = Nosebar, **2** = 76 mm (3 in) with A-Side output shaft, **3** = 76 mm (3 in) with D-Side output shaft
- **Exit Tail Type:** **0** = Standard 76 mm (3 in) , **1** = Dual output shaft
- **Drive Module Type:** **P** = Pneumatic, **M** = Manual spring, **W** = SEW shaft / pneumatic, **Y** = SEW shaft / manual
- **V-guide & Mounting Bracket Options:**
  - **1** = Non V-guided belt, conveyor to include mounting brackets
  - **2** = V-guided belt, conveyor to include mounting brackets
  - **3** = Non V-guided belt, conveyor not to include mounting brackets
  - **4** = V-guided belt, conveyor not to include mounting brackets
  - **5** = Non V-guided belt, conveyor not to include mounting brackets, with returns
  - **6** = V-guide belt, conveyor not to include mounting brackets, with returns
- **Conveyor Length Reference:** LL.LL in feet
- **Conveyor Width Reference**
- **Documentation Language:** **M** = US, **U** = Europe

* Conveyor load capacity depends on conveyor size, incline, motor position, accumulated loads and other factors.

Order gearmotor mounting packages and gearmotors separately, see pages 54-69.
For support stands and accessories, see page 80-85.

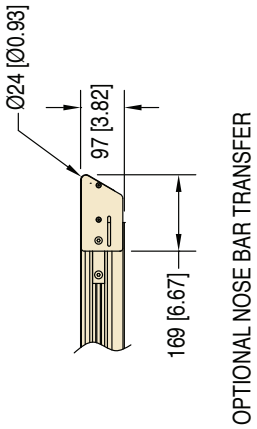

OPTIONAL NOSE BAR TRANSFER

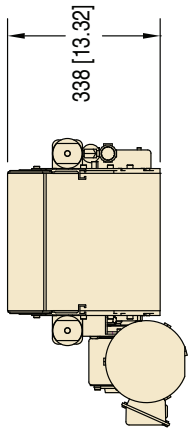

W = Conveyor Belt Width **Dim** = mm (in)

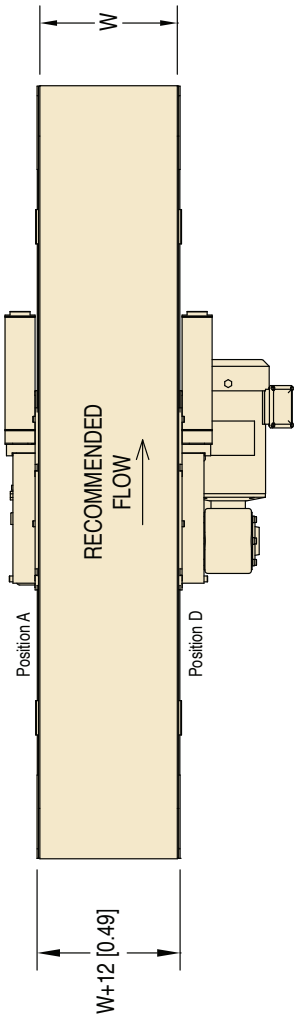

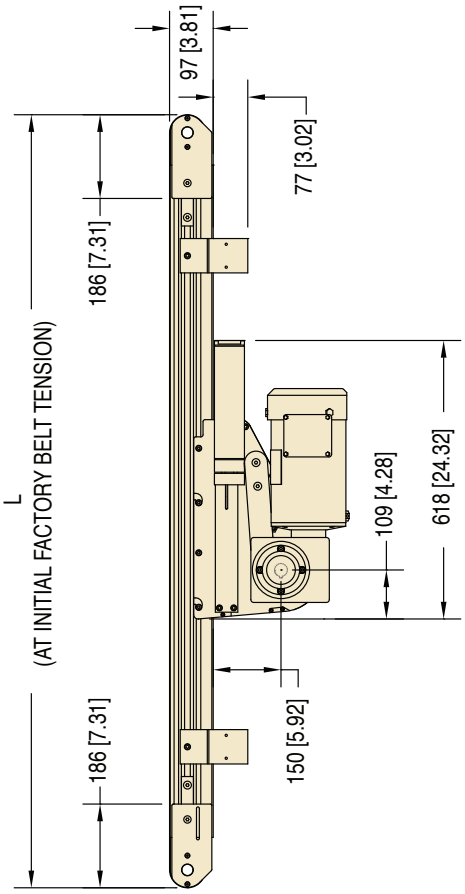

GEARMOTOR NOT INCLUDED
ORDER SEPARATELY

Drive Shaft Position

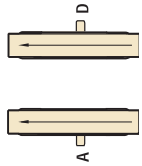

Reversing Belt Direction reduces conveyor load capacity to 66%.

Standard Sizes

Conveyor Width Reference	04	06	02 increments **up to...**	48
Conveyor Belt Width (W)	95 mm (3.75 in)	152 mm (6 in)	51 mm (2 in) increments **up to...**	1,219 mm (48 in)
Conveyor Length Reference	0400		0001 increments **up to...**	9900
Conveyor Length (L)	1,219 mm (48 in)		3 mm (0.12 in) increments **up to...**	30,175 mm (99 ft)

NOTE: Conveyor longer than 3,658 mm (12 ft) will be constructed using a multiple piece frame. Consult factory for locations.
NOTE: Conveyors wider than 1016 mm (40 in) require v-guide belt tracking.

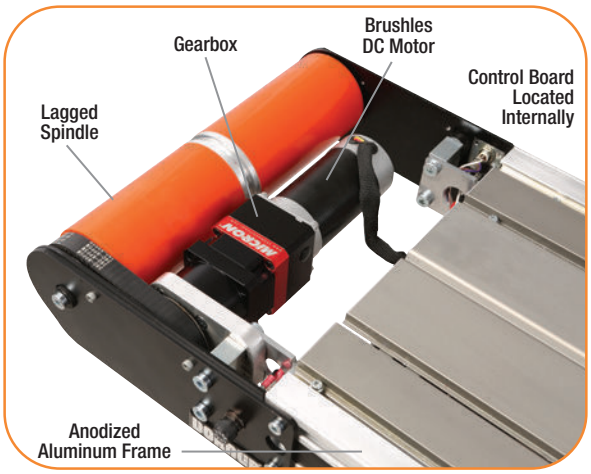

Specifications

- Belt widths: 152 to 610 mm (6 to 24 in)
- Conveyor lengths: 914 to 3,658 mm (36 in to 12 ft)
- Belt speeds: variable speed, (3) speed options
  - 4.6 to 24.4 m/min (15 to 80 ft/min)
  - 6.4 to 40.5 m/min (21 to 133 ft/min)
  - 8.2 to 52.1 m/min (27 to 171 ft/min)
- Conveyor load capacity (non-accumulated, distributed load):
  - 4.6 to 24.4 m/min (15 to 80 ft/min) – Up to 54.4 kg (120 lbs)
  - 6.4 to 40.5 m/min (21 to 133 ft/min) – Up to 31.3 kg (69 lbs)
  - 8.2 to 52.1 m/min (27 to 171 ft/min) – Up to 23.6 kg (52 lbs)
- Indexing capable: Up to 30 indexes per minute
- Duty cycle: continuous rated
- Built-In / fixed acceleration and deceleration
- iDrive control models:
  - Integrated forward/ off / reverse switch, variable speed pot, and 115V 1 Ph input power supply
  - Integrated forward/ off / reverse switch, and variable speed pot (DC power supply by others)
  - Flying leads for remote start / stop. Includes forward/ off / reverse switch, variable speed pot, (DC power supply by others)
- V-guided belts for maintenance free belt tracking
- Maintenance free sealed bearings
- Grease filled, sealed for life planetary gear boxes
- Maintenance free brushless DC Motor

3200 Series iDRIVE Belted Conveyor

32 E D M W W - L L L L 1 0 1 A P P P P B B - F D C P S

- **Speed Range:** **L** = 15-80 FPM, **M** = 1-133 FPM, **H** = 27-171 FPM
- **Power Supply:** **P** = Power supply included, **N** = No power supply
- **Control Type:** **M** = Mounted full control, **Q** = Remote start/stop with 1.8 m (6 ft) cord, **R** = Remote start/stop with 9 m (30 ft) cord
- **Integrated Frame Drive**
- **Belt Type**
- **Profile (D side)**
- **Profile (A side)**
- **Drive Shaft Position:** **A, B, C or D**
- **Idler Tail Type:** **0** = Standard 76 mm (3 in) , **1** = Nosebar, **2** = 76 mm (3 in) with A-Side output shaft, **3** = 76 mm (3 in) with D-Side output shaft
- **Drive Tail Type:** **0** = Standard 76 mm (3 in) , **1** = Dual output shaft
- **V-guide & Mounting Bracket Options:**
  - **1** = Non V-guided belt, conveyor to include mounting brackets
  - **2** = V-guided belt, conveyor to include mounting brackets
  - **3** = Non V-guided belt, conveyor not to include mounting brackets
  - **4** = V-guided belt, conveyor not to include mounting brackets
  - **5** = Non V-guided belt, conveyor not to include mounting brackets, with returns
  - **6** = V-guide belt, conveyor not to include mounting brackets, with returns
- **Conveyor Length Reference:** LL.LL in feet
- **Conveyor Width Reference**
- **Documentation Language:** **M** = US, **U** = Europe

For support stands and accessories, see page 80-85.

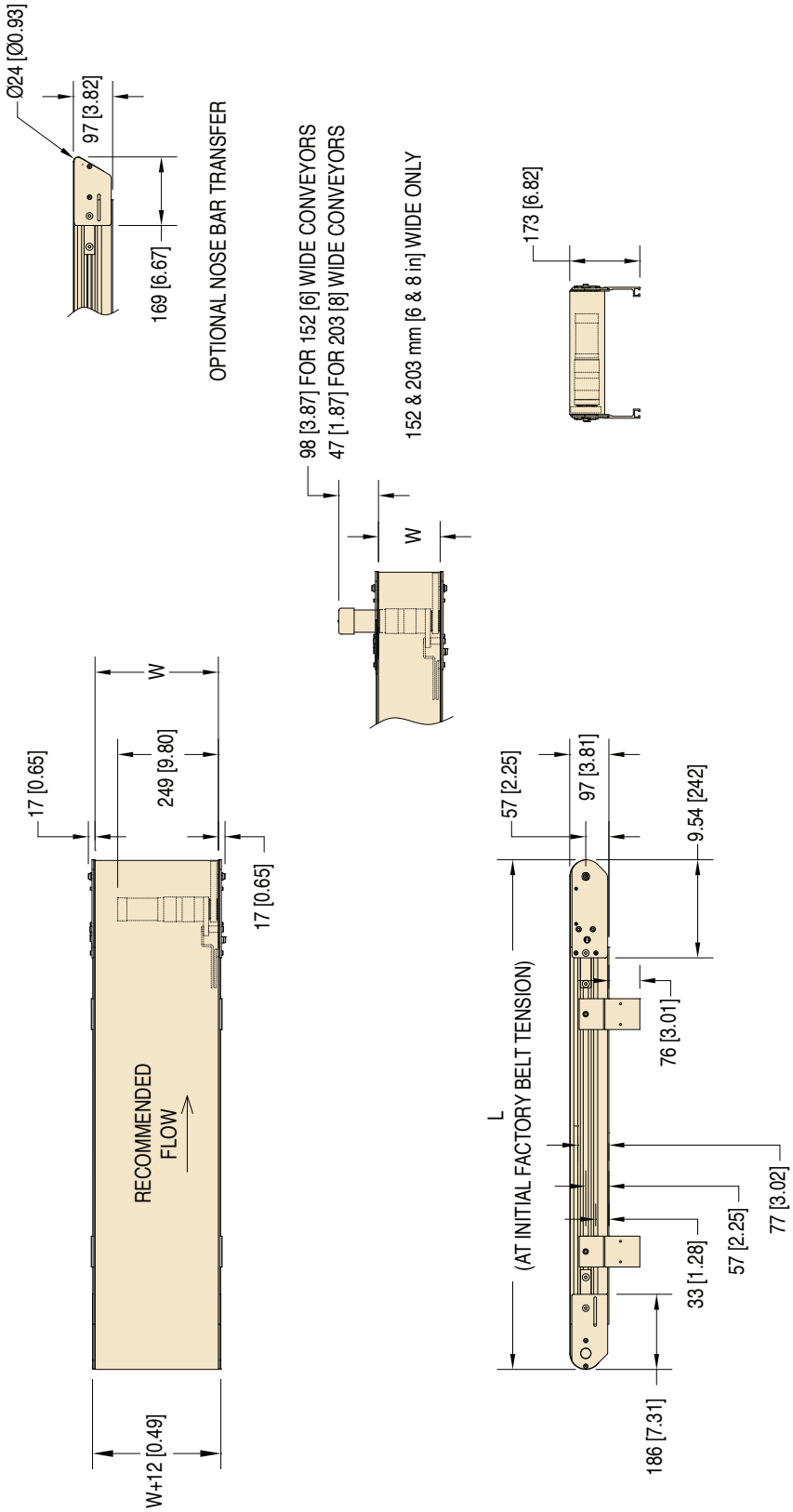

Controls shown in position "A"

W = Conveyor Belt Width **Dim** = mm (in)

Controls Position

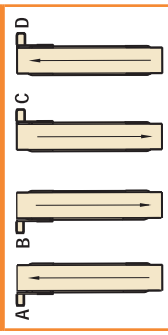

Since belts are being pulled, positions A & D are preferred. Pushing belts (B & C) reduce conveyor load capacity by approximately 66%.

Standard Sizes						
Conveyor Width Reference	06	08	10	02 increments **up to...**		24
Conveyor Belt Width (W)	152 mm (6 in)	203 mm (8 in)	254 mm (10 in)	51 mm (2 in) increments **up to...**		610 mm (24 in)
Conveyor Length Reference	0300	0001 increments **up to...**			1200	
Conveyor Length (L)	914 mm (36 in)	3 mm (0.12 in) increments **up to...**				3,660 mm (12 ft)

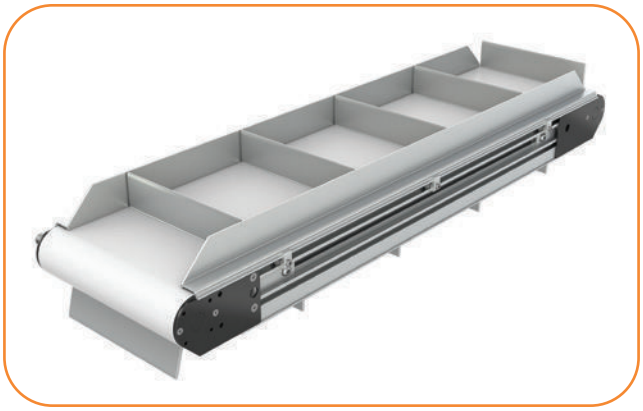

Specifications

- Loads up to 181 kg (400 lbs)*
- Belt speeds up to 183 m/min (600 ft/min)
- Belt widths: 95 to 1,219 mm (3.75 to 48 in)
- Conveyor lengths: 914 to 12,192 mm (36 in to 40 ft)
- Cleats available from 6 to 150 mm (0.24 to 5.9 in) high
- 51 mm (2 in) minimum cleat spacing
- 41 mm (1.62 in) of belt take-up on conveyors up to 6 m (20 ft) long
- 82 mm (3.24 in) of belt take-up on conveyors over 6 m (20 ft) long
- 76 mm (3 in) diameter drive pulley turns approximately 246 mm (9.7 in) of belt per revolution

OPTIONAL: Sidewall Cleated Belt

Used for small part handling. Available in 152 mm (6 in) and wider belt widths.

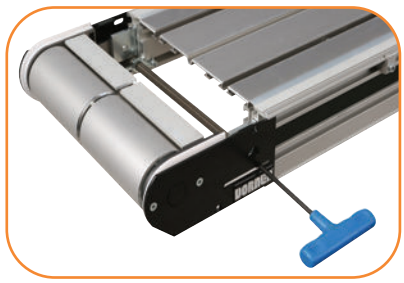

STANDARD FEATURE: Rack and Pinion

Allows the tail section to be easily slid back for quick belt removal.

3200 Series Cleated Belt End Drive Conveyor

32 C T M W W - L L L L 1 0 1 A C P S S S S L - F D C P S

- **Speed Range:** **L** = 15-80 FPM, **M** = 1-133 FPM, **H** = 27-171 FPM
- **Power Supply:** **P** = Power supply included, **N** = No power supply
- **Control Type:** **M** = Mounted full control, **Q** = Remote start/stop with 1.8 m (6 ft) cord, **R** = Remote start/stop with 9 m (30 ft) cord
- **Integrated Frame Drive (if required)**
- **Low Friction Belt Base Belt** (if required)
- **Cleat Spacing:** **SS.SS in inches**
- **Profile Type**
- **Cleat Type**
- **Drive Shaft Position:** **A, B, C or D**
- **Idler Tail Type:** **0** = Standard 76 mm (3 in) , **2** = 76 mm (3 in) with A-Side output shaft, **3** = 76 mm (3 in) with D-Side output shaft
- **Drive Tail Type:** **0** = Standard 76 mm (3 in) , **1** = Dual output shaft
- **V-guide & Mounting Bracket Options:**
  - **1** = Non V-guided belt, conveyor to include mounting brackets
  - **2** = V-guided belt, conveyor to include mounting brackets
  - **3** = Non V-guided belt, conveyor not to include mounting brackets
  - **4** = V-guided belt, conveyor not to include mounting brackets
  - **5** = Non V-guided belt, conveyor not to include mounting brackets, with returns
  - **6** = V-guide belt, conveyor not to include mounting brackets, with returns
- **Conveyor Length Reference:** LL.LL in feet
- **Conveyor Width Reference**
- **Documentation Language:** **M** = US, **U** = Europe

* Conveyor load capacity depends on conveyor size, incline, motor position, accumulated loads and other factors.

Order gearmotor mounting packages and gearmotors separately, see pages 54-69.
For support stands and accessories, see page 80-85.

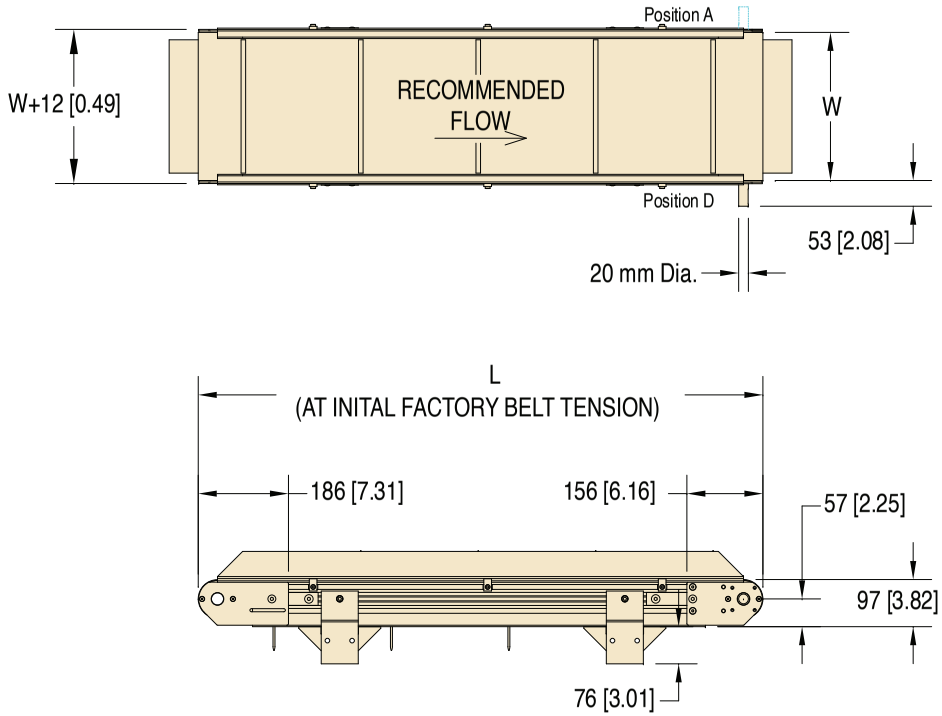

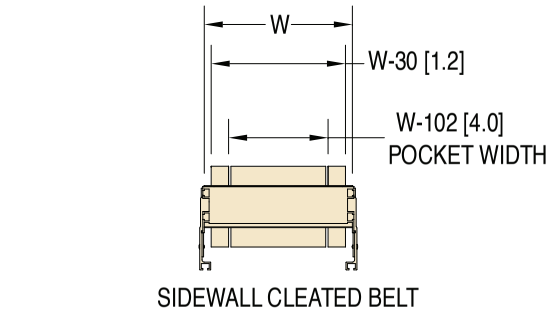

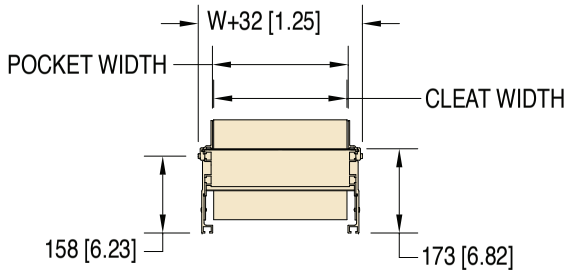

W = Conveyor Belt Width **Dim** = mm (in)
Note: 152 mm (6 in) min width for Sidewall Cleated Belt

Cleats

Type	Pocket Width	Cleat Width
A, B, C, F, G, H, V, J	W-1.00 (25)	W-1.20 (30)
W, X, Y	W-2.00 (51)	W-2.20 (56)

Standard Sizes

Conveyor Width Reference	04	06	02 increments **up to...**	48
Conveyor Belt Width (W)	95 mm (3.75 in)	152 mm (6 in)	51 mm (2 in) increments **up to...**	1,219 mm (48 in)
Conveyor Length Reference	0250		0001 increments **up to...**	4000
Conveyor Length (L)	914 mm (36 in)		3 mm (0.12 in) increments **up to...**	6102 mm (40 ft)

NOTE: Conveyor longer than 3,658 mm (12 ft) will be constructed using a multiple piece frame. Consult factory for locations.

Drive Shaft Position

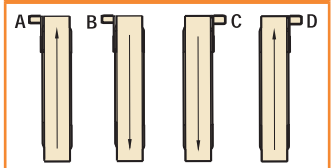

Since belts are being pulled, positions A & D are preferred. Pushing belts (B & C) reduce conveyor load capacity by approximately 66%.

Specifications

- Loads up to 181 kg (400 lbs)*
- Belt speeds to 183 m/min (600 ft/min)
- Belt widths: 95 to 1,219 mm (3.75 to 48 in)
- Conveyor lengths: 1,219 to 12,192 mm (48 in to 40 ft)
- Fixed angle: 5˚, 10˚, 15˚, and 20˚
- 41 mm (1.62 in) of belt take-up on conveyors up to 6 m (20 ft) long
- 82 mm (3.24 in) of belt take-up on conveyors over 6 m (20 ft) long
- 76 mm (3 in) diameter drive pulley turns approximately 246 mm (9.7 in) of belt per revolution
- Nose-over configuration
- V-groove bedplate with guided belt provides positive belt tracking, even under demanding side load applications

OPTIONAL: Nose Bar Tail

Includes sealed bearings, 20 mm (0.79 in) diameter rollers and is available at idler end for small part transfers.

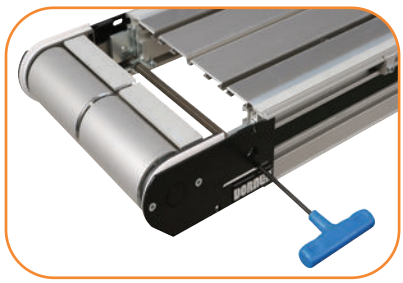

STANDARD FEATURE: Rack and Pinion

Allows the tail section to be easily slid back for quick belt removal.

3200 Series Z-Frame Flat Belt End Drive Conveyor

32 E D M WW - LLLL - LLLL AA E 1 0 1 A PP BB

- **Belt Type**
- **Profile**
- **Drive Shaft Position: A, B, C or D**
- **Idler Tail Type: 0** = Standard 76 mm (3 in) , 1 = Nosebar, **2** = 76 mm (3 in) with A-Side output shaft, **3** = 76 mm (3 in) with D-Side output shaft
- **Drive Tail Type: 0** = Standard 3", **1** = Dual output shaft, **2** = 76 mm (3 in) Tension drive tail
- **V-guide & Mounting Bracket Options:**
  - **1** = Non V-guided belt, conveyor to include mounting brackets
  - **2** = V-guided belt, conveyor to include mounting brackets
  - **3** = Non V-guided belt, conveyor not to include mounting brackets
  - **4** = V-guided belt, conveyor not to include mounting brackets
- **Belt Direction: E = Incline D = Decline**
- **Angle: 05 = 5°, 10 = 10°, 15 = 15°, 20 = 20°**
- **Incline Section Length Reference:** LL.LL in feet
- **Horizontal Section Length Reference:** LL.LL in feet
- **Conveyor Width Reference**
- **Documentation Language: M** = US, **U** = Europe

* Conveyor load capacity depends on conveyor size, incline, motor position, accumulated loads and other factors.

Order gearmotor mounting packages and gearmotors separately, see pages 54-69.
For support stands and accessories, see page 80-85.

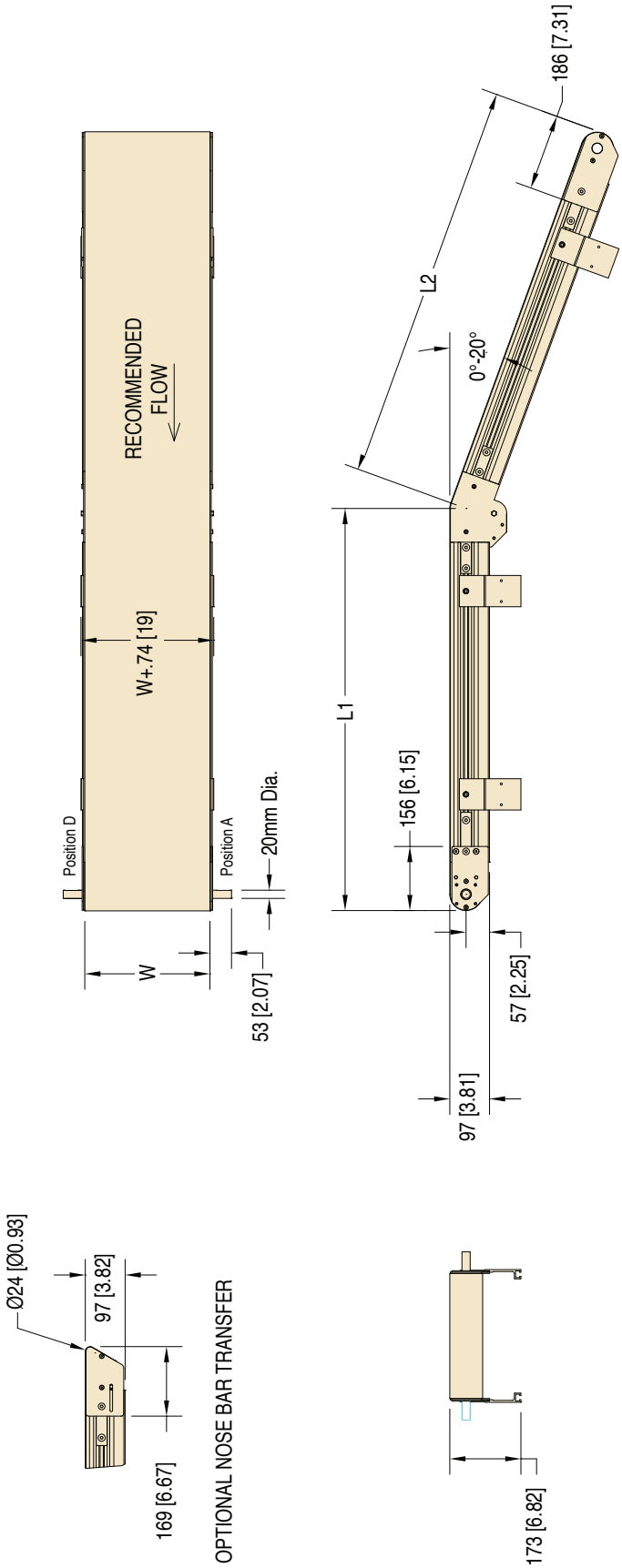

W = Conveyor Belt Width **Dim** = mm (in)
Note: Belt Direction is not reversible

Standard Sizes				
Conveyor Width Reference	04	06	02 increments **up to...**	48
Conveyor Belt Width (W)	95 mm (3.75 in)	152 mm (6 in)	51 mm (2 in) increments **up to...**	1,219 mm (48 in)
Conveyor Length Reference	0200		0001 increments **up to...**	3800
Conveyor Length (L)	610 mm (24 in)		3 mm (0.12 in) increments **up to...**	11,582 mm (38 ft)
L1 + L2 = Maximum 12,192 mm (40 ft) long conveyor				

NOTE: Conveyor longer than 3,658 mm (12 ft) will be constructed using a multiple piece frame. Consult factory for locations.
NOTE: Conveyors wider than 1016 mm (40 in) require v-guide belt tracking.

Drive Shaft Position

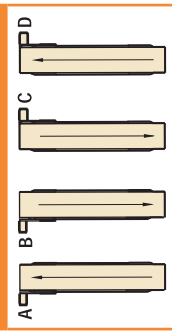

Since belts are being pulled, positions A & D are preferred. Pushing belts (B & C) reduce conveyor load capacity by approximately 66%.

Specifications

- Loads up to 45 kg (100 lbs)*
- Belt speeds up to 83.8 m/min (275 ft/min)
- Belt widths: 203 to 610 mm (8 to 24 in)
- Conveyor lengths: 1,219 to 7,620 mm (48 in to 25 ft)
- Fixed angle: 25˚, 30˚, 45˚ and 60˚
- Cleats available from 6 to 150 mm (0.24 to 5.9 in) high
- 41 mm (1.62 in) of belt take-up
- 76 mm (3 in) diameter drive pulley turns approximately 246 mm (9.7 in) of belt per revolution
- Z-Frame, nose-over and horizontal-to-incline configurations
- V-guided belts eliminate tracking adjustments

Configurations

Horizontal to Incline | Noseover | Z-Frame

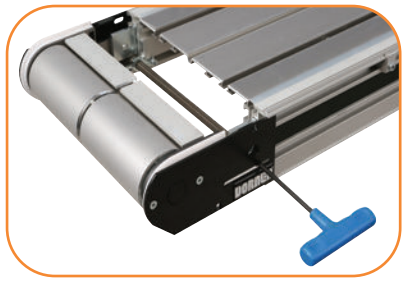

STANDARD FEATURE:
Rack and Pinion

Allows the tail section to be easily slid back for quick belt removal.

3200 Series Z-Frame Cleated Belt End Drive Conveyor

32 C T M W W - L L L L - L L L L - L L L L A A E 1 0 1 A C P S S S S

- **Cleat Spacing:** SS.SS in inches
- **Profile Type**
- **Cleat Type**
- **Drive Shaft Position:** **A, B, C or D**
- **Idler Tail Type:** **0** = Standard 76 mm (3 in) , **2** = 76 mm (3 in) with A-Side output shaft, **3** = 76 mm (3 in) with D-Side output shaft
- **Drive Tail Type:** **0** = Standard 76 mm (3 in) , **1** = Dual output shaft, **2** = 76 mm (3 in) Tension drive tail
- **V-guide & Mounting Bracket Options:**
  - **1** = Non V-guided belt, conveyor to include mounting brackets
  - **2** = V-guided belt, conveyor to include mounting brackets
  - **3** = Non V-guided belt, conveyor not to include mounting brackets
  - **4** = V-guided belt, conveyor not to include mounting brackets
- **Belt Direction:** **E = Incline D = Decline**
- **Angle:** **25 = 25°, 30 = 30°, 45 = 45°, 60 = 60°**
- **L3 Section Length Reference:** LL.LL in feet
- **L2 Section Length Reference:** LL.LL in feet
- **L1 Section Length Reference:** LL.LL in feet
- **Conveyor Width Reference**
- **Documentation Language:** **M** = US, **U** = Europe

* Conveyor load capacity depends on conveyor size, incline, motor position, accumulated loads and other factors.

Order gearmotor mounting packages and gearmotors separately, see pages 54-69.
For support stands and accessories, see page 80-85.

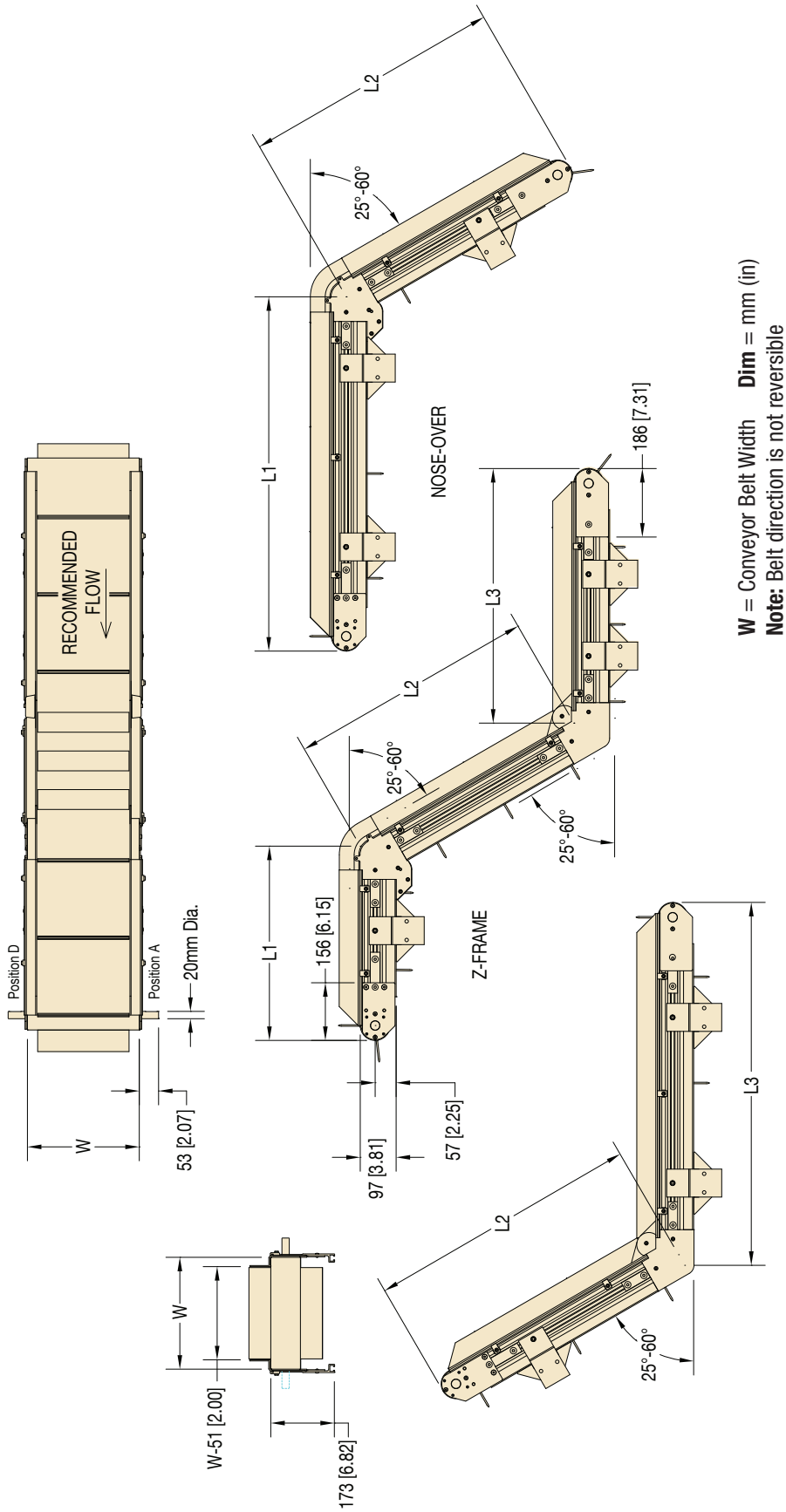

W = Conveyor Belt Width **Dim** = mm (in)

Note: Belt direction is not reversible

Note: 35° to 60° for 457 to 610 mm (18 to 24 in) wide conveyors

Drive Shaft Position

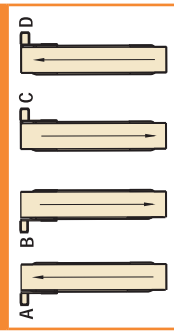

Since belts are being pulled, positions A & D are preferred. Pushing belts (B & C) reduce conveyor load capacity by approximately 66%.

Standard Sizes			
Conveyor Width Reference	08	02 increments **up to...**	24
Conveyor Belt Width (W)	203 mm (8 in)	51 mm (2 in) increments **up to...**	610 mm (24 in)
Pocket Width	152 mm (6 in)	51 mm (2 in) increments **up to...**	559 mm (22 in)
Conveyor Length Reference	0200	0001 increments **up to...**	1300
Section Length (L)	610 mm (24 in)	3 mm (0.12 in) increments **up to...**	3,962 mm (13 ft)
L1 + L2 + L3 = Maximum 7,620 mm (25 ft) long conveyor			

NOTE: Conveyor longer than 3,658 mm (12 ft) will be constructed using a multiple piece frame. Consult factory for locations.

Specifications

- Loads up to 45 kg (100 lbs)*
- Belt speeds up to 83.8 m/min (275 ft/min)
- Belt widths: 203 to 610 mm (8 to 24 in)
- Conveyor lengths: 1,219 to 7,620 mm (48 in to 25 ft)
- Fixed angle, 25˚, 30˚, 45˚ and 60˚
- Available with 30 mm and 40 mm cleat and sidewall heights
- 41 mm (1.62 in) of belt take-up
- 76 mm (3 in) diameter drive pulley turns approximately 246 mm (9.7 in) of belt per revolution
- Z-Frame, nose-over and horizontal-to-incline configurations
- V-guided belts eliminate tracking adjustments

STANDARD FEATURE:
Small Parts Handling

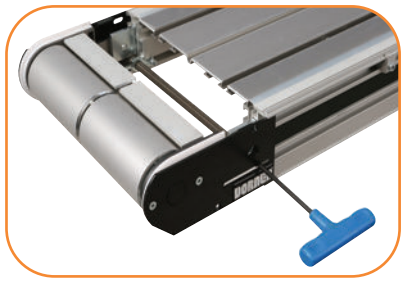

STANDARD FEATURE:
Rack and Pinion

Allows the tail section to be easily slid back for quick belt removal.

Configurations

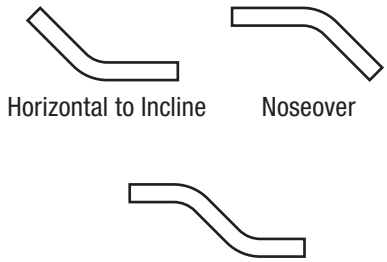

3200 Series Z-Frame Sidewall Cleated Belt End Drive Conveyor

32 C T M W W - L L L L - L L L L - L L L L A A E 1 0 1 A C 1 S S S S

- **Cleat Spacing:** SS.SS in inches
- **Profile Type**
- **Cleat Type**
- **Drive Shaft Position:** **A, B, C or D**
- **Idler Tail Type:** **0** = Standard 76 mm (3 in) , **2** = 76 mm (3 in) with A-Side output shaft, **3** = 76 mm (3 in) with D-Side output shaft
- **Drive Tail Type:** **0** = Standard 76 mm (3 in) , **1** = Dual output shaft
- **V-guide & Mounting Bracket Options:**
  - **1** = Non V-guided belt, conveyor to include mounting brackets
  - **2** = V-guided belt, conveyor to include mounting brackets
  - **3** = Non V-guided belt, conveyor not to include mounting brackets
  - **4** = V-guided belt, conveyor not to include mounting brackets
- **Belt Direction:** **E = Incline D = Decline**
- **Angle:** **25 = 25°, 30 = 30°, 45 = 45°, 60 = 60°**
- **L3 Section Length Reference:** LL.LL in feet
- **L2 Section Length Reference:** LL.LL in feet
- **L1 Section Length Reference:** LL.LL in feet
- **Conveyor Width Reference**
- **Documentation Language:** **M** = US, **U** = Europe

* Conveyor load capacity depends on conveyor size, incline, motor position, accumulated loads and other factors.

Order gearmotor mounting packages and gearmotors separately, see pages 54-69.
For support stands and accessories, see page 80-85.

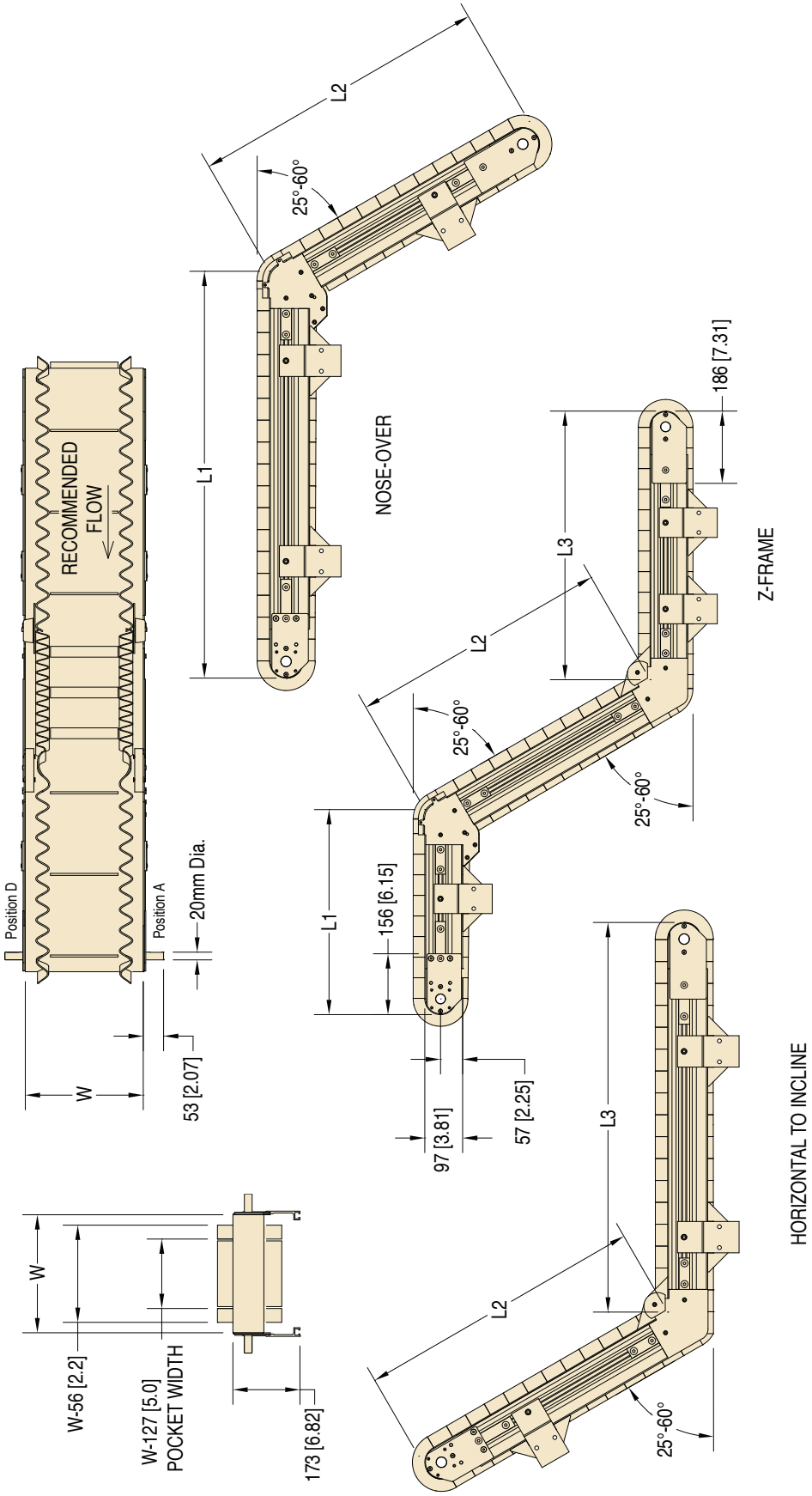

W = Conveyor Belt Width **Dim** = mm (in)
Note: Belt direction is not reversible
Note: 35° to 60° for 457 to 610 mm (18 to 24 in) wide conveyors

Drive Shaft Position

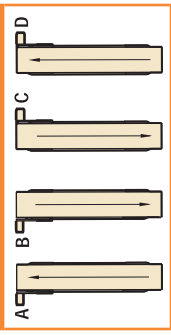

Since belts are being pulled, positions A & D are preferred. Pushing belts (B & C) reduce conveyor load capacity by approximately 66%.

Standard Sizes				
Conveyor Width Reference	08	02 increments **up to...**	24
Conveyor Belt Width (W)	203 mm (8 in)	51 mm (2 in) increments **up to...**	610 mm (24 in)
Pocket Width	76 mm (3 in)	51 mm (2 in) increments **up to...**	482 mm (19 in)
Conveyor Length Reference	0200	0001 increments **up to...**	1300
Section Length (L)	610 mm (24 in)	3mm (0.12 in) increments **up to...**	3,962mm (13 ft)
L1 + L2 + L3 = Maximum 7,620 mm (25 ft) long conveyor			

NOTE: Conveyor longer than 3,658 mm (12 ft) will be constructed using a multiple piece frame. Consult factory for locations.

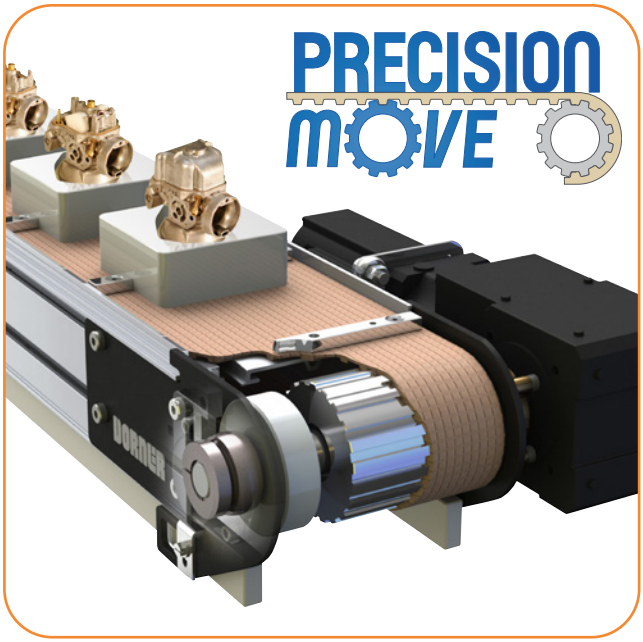

Specifications

- Loads up to 340 kg (750 lbs)*
- Belt speeds up to 158 m/min (517 ft/min)
- Belt widths: 95 mm (4 in) to 457 mm (18 in) in with 51 mm (2 in) increments
- Conveyor lengths: 610 to 15,240 mm (24 in to 50 ft)
- 21 tooth H 12.7 mm (1/2 in) pitch profile timing belt (10 mm Metric pitch available)
- 84 mm (3.3 in) pitch diameter drive and idler pulleys turn approximately 267 mm (10.5 in) of belt per revolution
- Optional M5 belt inserts
- Optional pallet mounting bars, 8 mm x 12.7 mm (5/16 in x 1/2 in) plated steel
- Conveyor mechanical accuracy ± .25 mm (0.01 in)
- Conveyor package w/ servo motor index accuracy ± .5 mm (0.02 in)
- 100 indexes per minute rated
- High load capacity urethane belting with kevlar cords (True Timing Belt)
- No capacity drop when pushing belt
- Minimum pallet mounting bar spacing is 25 mm (1 in) in length

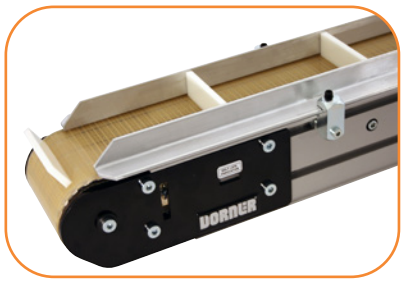

OPTIONAL: 3 Cleat Heights Available

6 mm, 12.7 mm or 25 mm
(1/4 in, 1/2 in or 1 in)

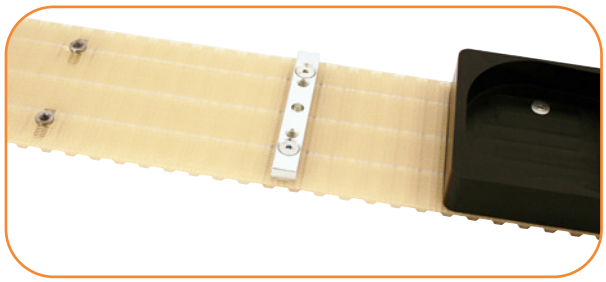

Pallet / Fixture Mounting System

3 Flexible Options: M5 inserts, pallet mounting bars, or direct pallet mounting (see pg 22-23)

3200 Series Precision Move Conveyor

32 P M M W W - L L L L 1 1 S A P P P P B - S S S

- **Hole / Pallet / Cleat Spacing** (SS.S in inches)
- **Belt Type**
- **Profile (D side)**
- **Profile (A side)**
- **Drive Shaft Position: A, B, C or D**
- **Idler Tail Type: S** = Standard 76 mm (3 in) , **A** = with A-Side output shaft, **D** = with D-Side output shaft
- **Drive Tail Type: 1** = Servo, **2** = Side or bottom mount, **3** = Servo with aux shaft, **4** = Side / bottom mount with aux shaft
- **Mounting Bracket Options: 1** = Conveyor to include mounting brackets, **3** = Conveyor not to include mounting brackets
- **Conveyor Length Reference:** LL.LL in feet
- **Conveyor Width Reference**
- **Documentation Language: M** = US, **U** = Europe

* Conveyor load capacity depends on conveyor size, incline, motor position, accumulated loads and other factors.

Order gearmotor mounting packages and gearmotors separately, see pages 54-69.
For support stands and accessories, see page 80-85.

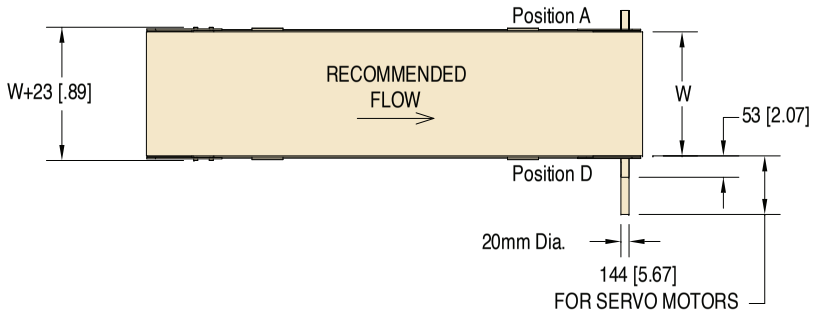

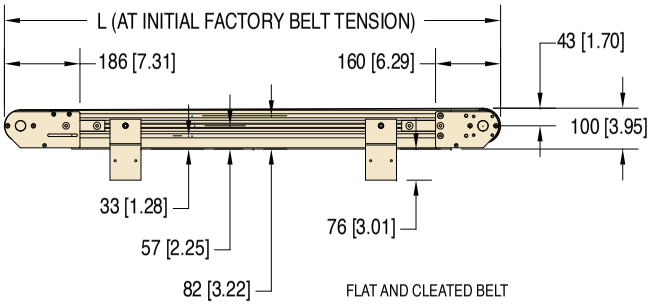

FLAT AND CLEATED BELT

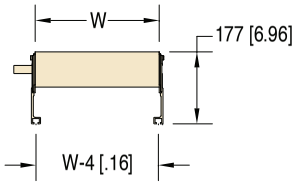

FLAT BELT

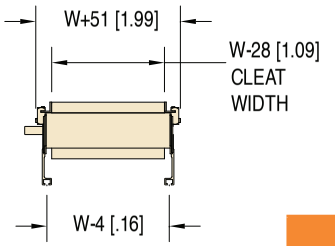

CLEATED BELT

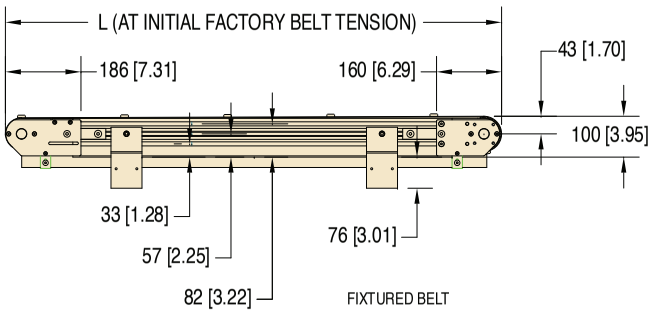

FIXTURED BELT

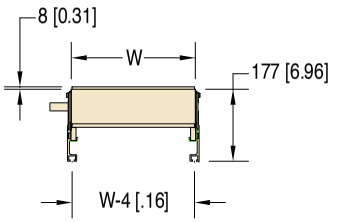

FIXTURED BELT

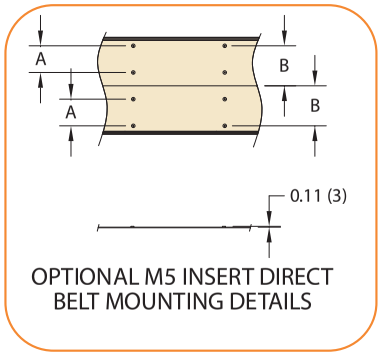

OPTIONAL M5 INSERT DIRECT
BELT MOUNTING DETAILS

W = Conveyor Belt Width
Dim = mm (in)

Drive Shaft Position

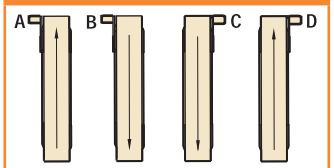

All positions available with no loss in carrying capacity.

Standard Sizes

Conveyor Width Reference	04	06	02 increments **up to...**	18
Conveyor Belt Width (W)	95 mm (3.75 in)	152 mm (6.0 in)	51 mm (2 in) increments **up to...**	457 mm (18 in)
Conveyor Length Reference	0200	0001 increments **up to...**		5000
Conveyor Length (L)	610 mm (24 in)*	2.54 mm (0.1 in) increments **up to...**		15,240 mm (50 ft)

NOTE: Actual conveyor length may need to be adjusted to match belt pitch.
NOTE: Belt selection may limit length option.

Optional Direct Belt Mounting

Width (WW)	Belt Width	'A' Dim.	'B' Dim.
04	94 (3.7)	N/A	28.5 (1.125)
06	150.8 (5.940)	N/A	57.1 (2.250)
08	200.9 (7.910)	N/A	82.5 (3.250)
10	251.7 (9.910)	N/A	107.9 (4.250)
12	302.5 (11.910)	89 (3.500)	133.3 (5.250)
14	353.3 (13.910)	105.8 (4.167)	158.7 (6.250)
16	404.1 (15.910)	122.7 (4.833)	184.1 (7.250)
18	454.9 (17.910)	139.7 (5.500)	209.5 (8.250)

Fixture Mounting Bar

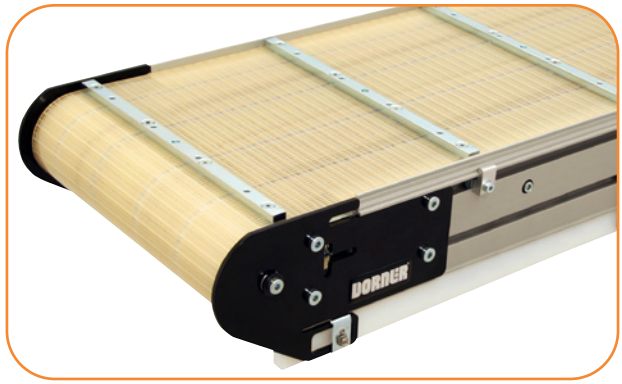

Specifications

- Provides an accurate mounting bar for pallet attachment
- M6 taps located along the bar length
- Provided assembled to conveyor belt
- Plated steel bar
- Minimum spacing = 51 mm (2.0 in)
- Spacing accuracy of belt fixtures

Spacing Range	Tolerance
25 to 76 mm (1 to 3 in)	±0.127 mm (0.005 in)
89 to 152 mm (3.5 to 6 in)	±0.178 mm (0.007 in)
165 to 254 mm (6.5 to 10 in)	±0.254 (0.010 in)
267 to 508 mm (10.5 to 20 in)	±0.381 mm (0.015 in)

Tolerance: fixture spacing tolerance can grow up to 1.52 mm (.060 in) across belt splice.

- Size and tolerance of belt fixture:
  - Width = .127 mm +0.025 / -0.102 mm (0.500 in +0.001 / -0.004 in)
  - Height = 8 mm +0.025 / -0.102 mm (0.312 in) +0.001 / -0.004 in)

Fixture Mounting Bar

Width (WW)	Belt Width	Hole Offset	Bar Width	Hole Qty	Hole Pattern	Tap Offset	Tap Qty	Tap Pattern
04	94 (3.7)	16 (0.625)	89 (3.5)	2	57 (2.25)	25 (1)	2	38 (1.5)
06	152 (5.94)	16 (0.625)	146 (5.75)	2	114 (4.5)	32 (1.25)	2	83 (3.25)
08	201 (7.91)	16 (0.625)	197 (7.75)	2	165 (6.5)	32 (1.25)	2	133 (5.25)
10	252 (9.91)	16 (0.625)	248 (9.75)	2	216 (8.5)	32 (1.25)	2	184 (7.25)
12	303 (11.91)	16 (0.625)	298 (11.75)	4	89 (3.5)	44 (1.75)	4	70 (2.75)
14	353 (13.91)	16 (0.625)	349 (13.75)	4	106 (4.167)	44 (1.75)	4	87 (3.417)
16	404 (15.91)	16 (0.625)	400 (15.75)	4	123 (4.833)	44 (1.75)	4	104 (4.083)
18	455 (17.91)	16 (0.625)	451 (17.75)	4	140 (5.5)	44 (1.75)	4	121 (4.75)

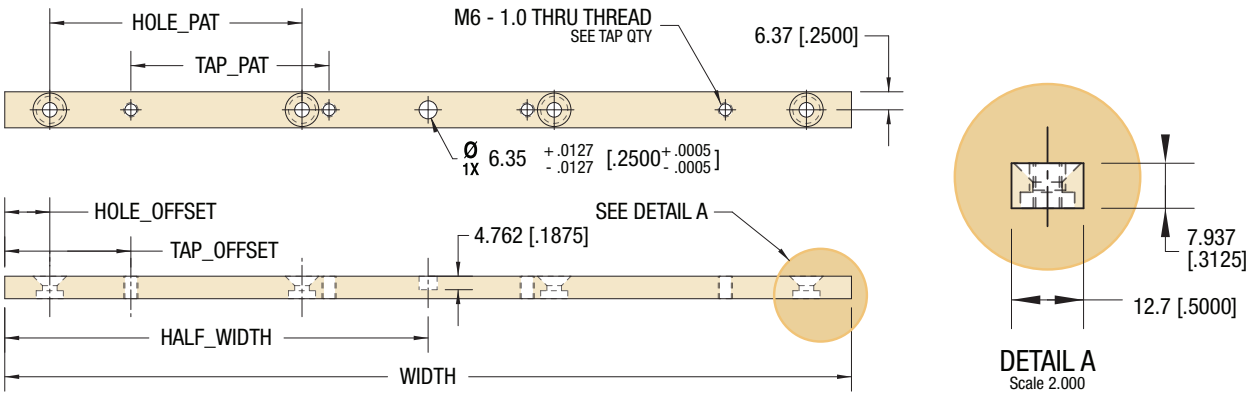

Fixture Guides – Adjustable Width Tolerance

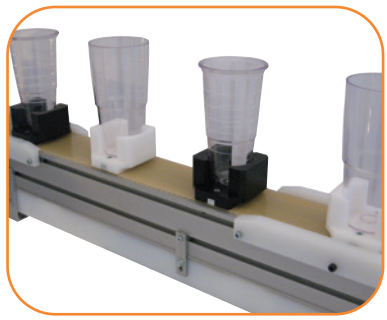

Specifications

- UHMW Guides for placement in areas requiring the tightest width tolerances
- 304.8 mm (12 in) long, sold in pairs
- Provides a side to side accuracy of up to ± .25 mm (0.010 in)

Fixture Guides

Part Number	Description
350226	Pair of Precision Move fixture guides

Due to the wide variety of drive set ups and applications, point of installation guarding is the responsibility of the end user.

Pallet Mount Recommendations

Mounting to Fixture Mounting Bar

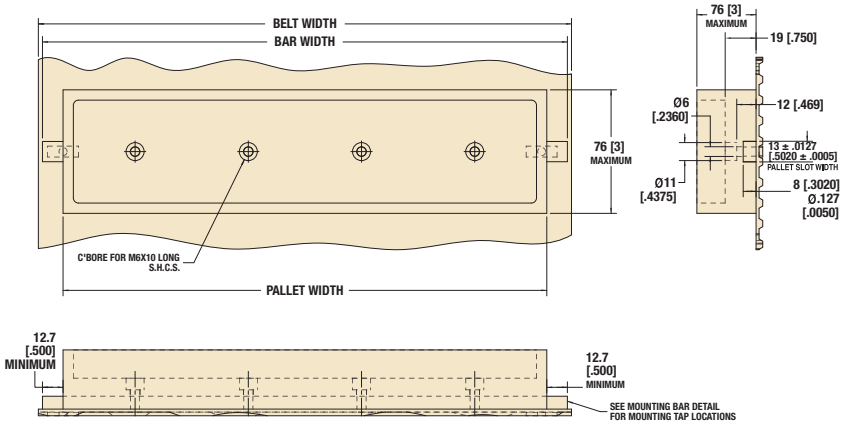

Mounting Directly to the Belt, 102-254 mm (4-10 in) wide

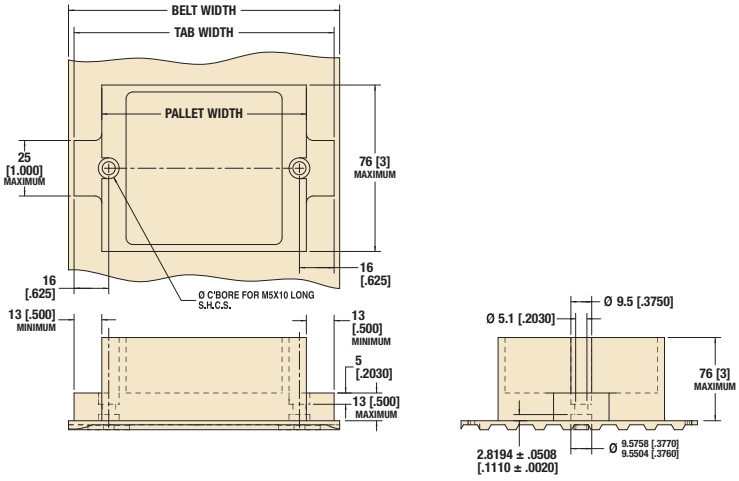

Mounting Directly to the Belt, 305-457 mm (12-18 in) wide

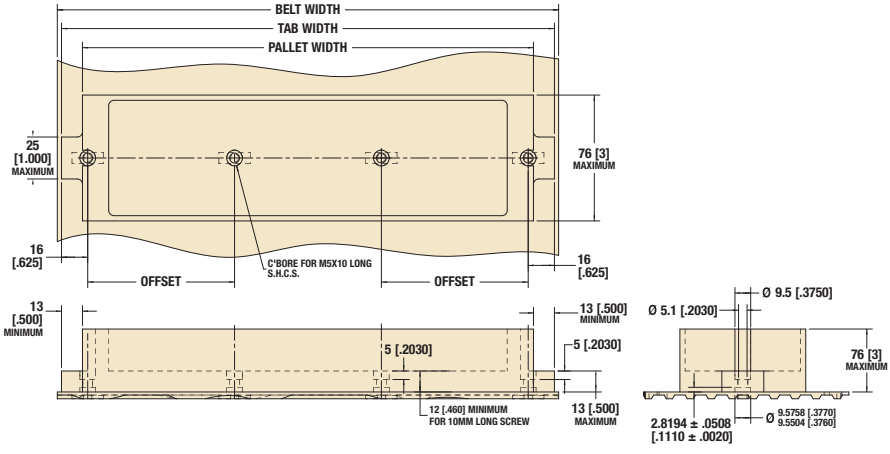

Specifications

- Maximum width of pallet = 76 mm (3 in)
- Maximum height of pallet = 76 mm (3 in)
- Maximum weight of empty pallet = 0.45 kg (1.0 lb) per belt insert
- Maximum speed of pallet around end roller = 82 m/min (270 ft/min)

Mounting to Fixture Mounting Bar

Conveyor Width	Belt Width	Bar Width
102 mm (4 in)	93.98 (3.700)	88.9 (3.500)
152 mm (6 in)	150.876 (5.940)	146.05 (5.750)
203 mm (8 in)	200.914 (7.910)	196.85 (7.750)
254 mm (10 in)	251.714 (9.910)	247.65 (9.750)
305 mm (12 in)	302.514 (11.910)	298.45 (11.750)
356 mm (14 in)	353.314 (13.910)	349.25 (13.750)
406 mm (16 in)	404.114 (15.910)	400.05 (15.750)
457 mm (18 in)	454.914 (17.910)	450.85 (17.750)

Mounting Directly to the Belt
102-254 mm (4-10 in) wide

Conveyor Width	Belt Width	Tab Width
102 mm (4 in)	93.98 (3.700)	88.9 (3.500)
152 (6 in)	150.876 (5.940)	146.05 (5.750)
203 mm (8 in)	200.914 (7.910)	196.85 (7.750)
254 mm (10 in)	251.714 (9.910)	247.65 (9.750)

Mounting Directly to the Belt
305-457 mm (12-18 in) wide

Conveyor Width	Belt Width	Tab Width	Offset
305 mm (12 in)	302.514 (11.910)	298.45 (11.750)	88.9 (3.500)
356 mm (14 in)	353.314 (13.910)	349.25 (13.750)	105.841 (4.167)
406 mm (16 in)	404.114 (15.910)	400.05 (15.750)	122.758 (4.833)
457 mm (18 in)	454.914 (17.910)	450.85 (17.750)	139.7 (5.500)

Due to the wide variety of drive set ups and applications, point of installation guarding is the responsibility of the end user.

Precision Move Servo Gearmotor

Specifications

- Indexes per minute rating = 100 per minute
- Conveyor/drive package index accuracy = ± .5 mm (0.020 in)
- Side mount with hollow shaft servo reducer
- Max belt speed = 82 m/min (270 ft/min)

Motor:

- Kollmorgen AKM Series Motor
- Brushless DC Servomotor with encoder
- 80 mm frame
- 1.02 kW
- Up to 640 VDC input
- Up to 2.62 amps
- Quick disconnect power and communication fittings
- UL, CE, RoHS Compliant

Gearbox:

- 90 Degree Helical Bevel Reducer
- 8:1 ratio
- 97% efficient
- 16 arc-minute backlash
- 20,000 hr rated
- 20 mm shrink fit hollow bore

Servo Gearmotor

Part Number	Controller Voltage	Max Belt Speed		Min Belt Speed		Torque		RPM
		M/min	Ft/min		Ft/min	-kg	in-lb	
32M008HR2B1KW	115V input	50	164	3	10		130	187
	230V input	83	273	3	10		130	312

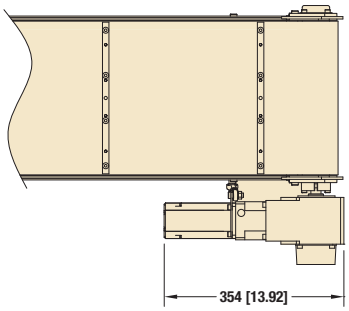

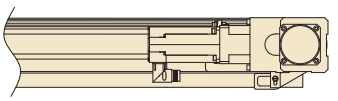

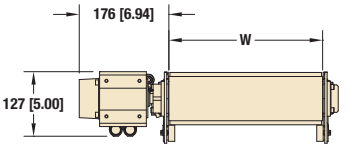

Precision Move Servo Side Mount Package

Specifications

- Direct mount side drive eliminating couplings and backlash issues
- Mounts with a zero-backlash shaft clamp system
- Includes shaft guarding and anti-rotation brackets

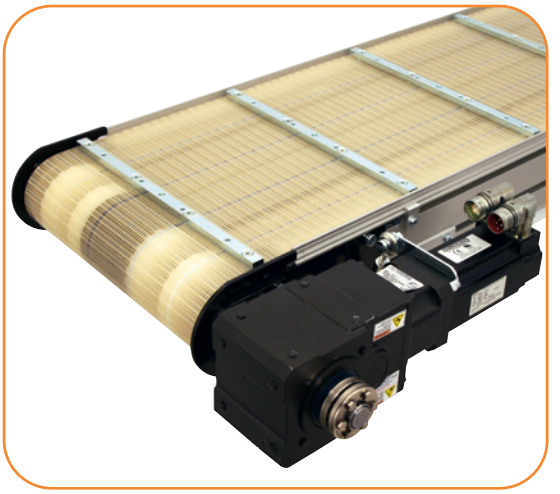

Side Mount

Description	Motor / Gearhead	Part Number
Side Mount	Servo Gearmotor	32MSHR(A)
Side Mount	Nema 34 Gearhead	32MSHR(A)N34

*A = Mount position (A, D)

Due to the wide variety of drive set ups and applications, point of installation guarding is the responsibility of the end user. Dimensions = mm (in)

See pages 79 and 80 for Servo Gearmotor Controller.

Precision Move Servo Gearhead Only

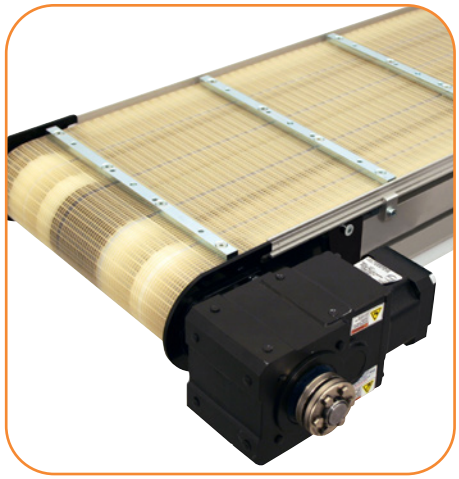

Specifications

- Standard Nema 34 input mounting dimensions
- 90° Helical Bevel Reducer
- 8:1 ratio
- 97% efficient
- 16 arc-minute backlash
- 20,000 hr rate

Servo Gearhead	
Part Number	Conveyor Speed Multiply Factor
	Side Mount
32M008HRN34	Belt Speed (FPM) = (Motor RPM) (0.109)

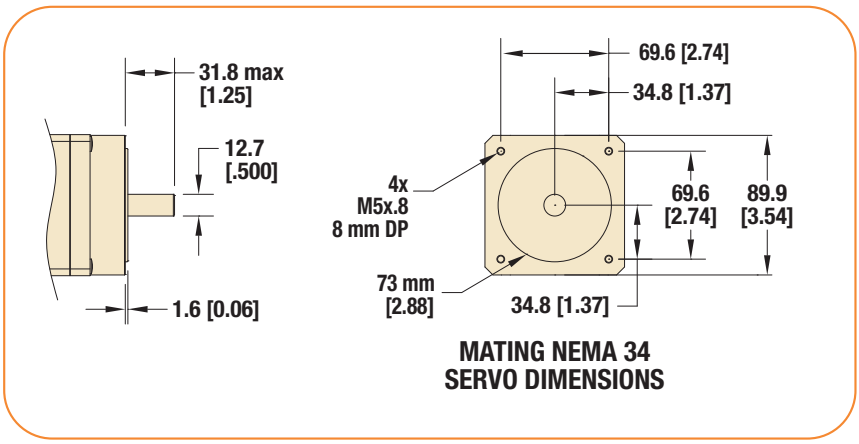

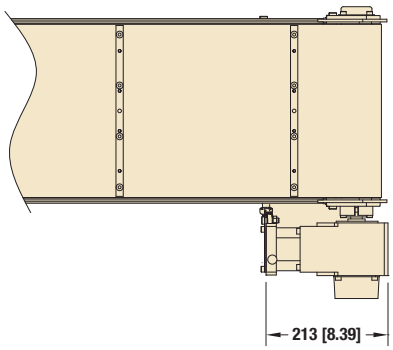

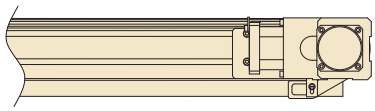

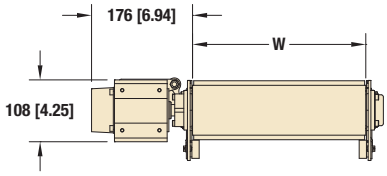

Dimensions = mm (in)

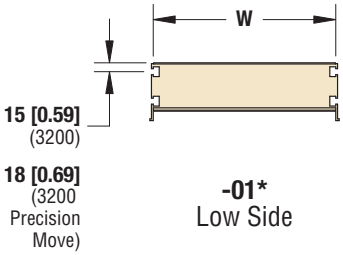

-01*
Low Side

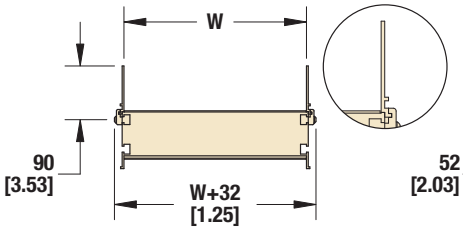

-04*
76 mm (3 in) Aluminum Side

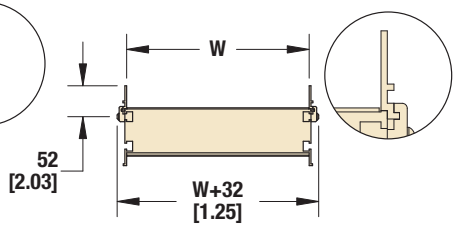

-05*
38 mm (1.5 in) Aluminum Side

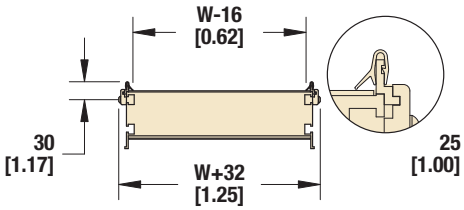

-07**
Low to Side Wiper
(Not available on Precision Move)

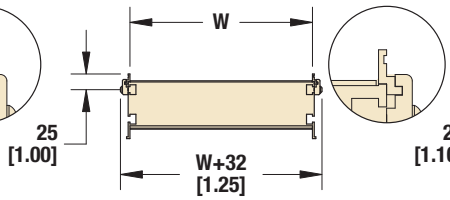

-09
13 (0.5 in) Aluminum Side
(Not available on Precision Move)

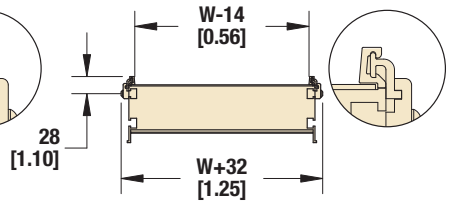

-10
13 (0.5 in) Extruded Plastic
(Do not use with belt #64)
(Not available on Precision Move)

*Z-Frame compatible profiles
**Do not use with high friction belts

Dimensions = mm (in)

05 Guide

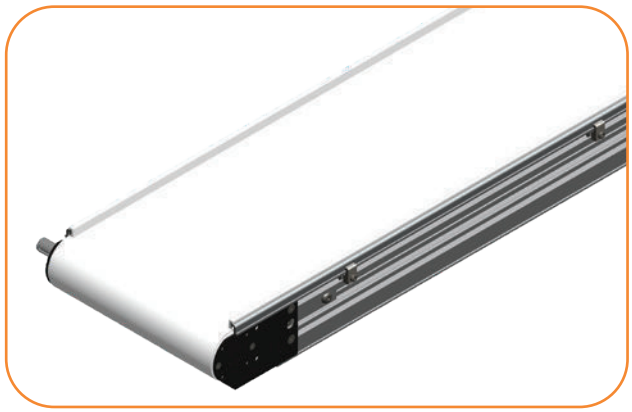

10 Guide

Due to the wide variety of drive set ups and applications, point of installation guarding is the responsibility of the end user.

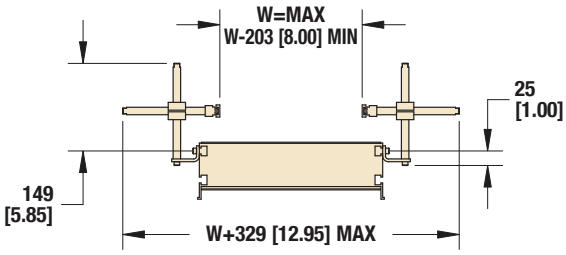

-13*
Adjustable Guiding

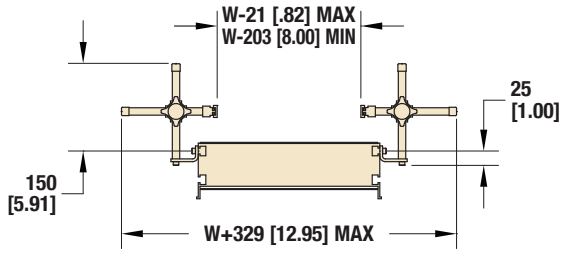

-14*
Tool-less Fully Adjustable Guide

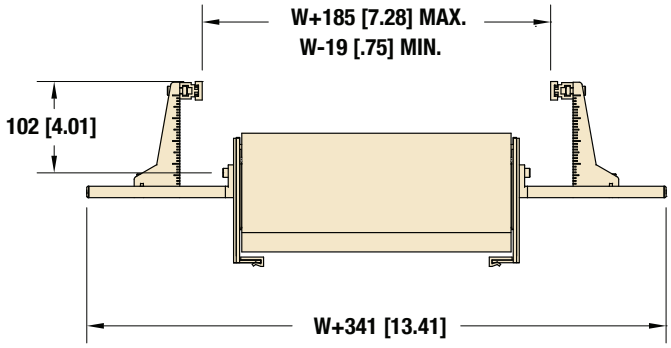

-16
Adjustable Outboard

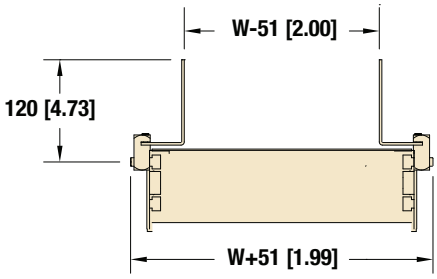

-24*
102 mm (4 in) Tall Stainless Steel

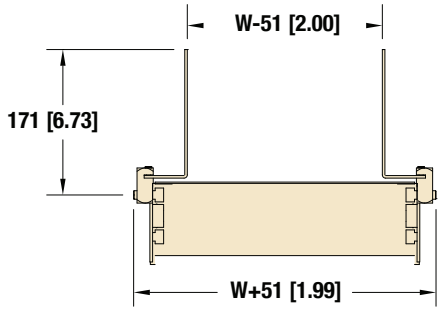

-26*
152 mm (6 in) Tall Stainless Steel

*Z-Frame compatible profiles

Dimensions = mm (in)

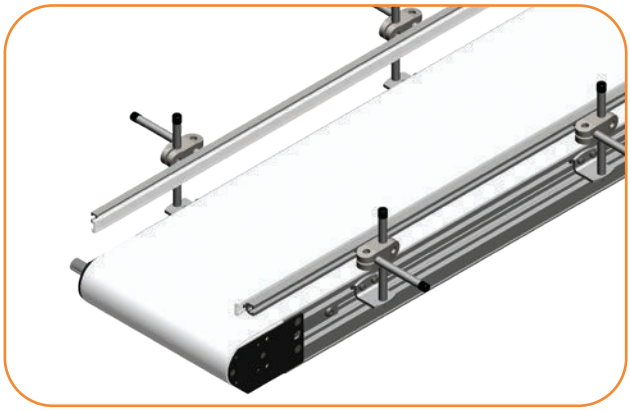

13 Guide

26 Guide

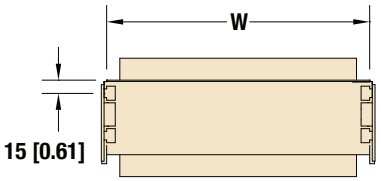

-0
Low Side Profile

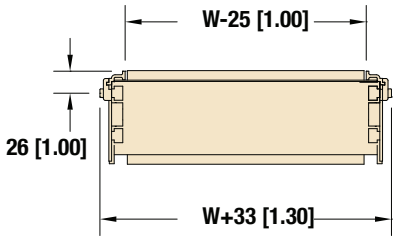

-1
12.7 mm (1/2 in)
Aluminum High Side

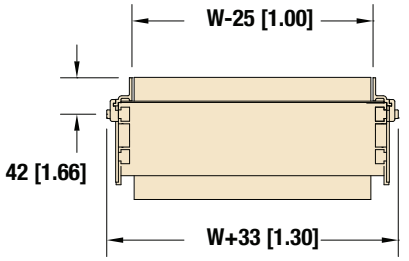

-2
25 mm (1 in) High
Aluminum High Side

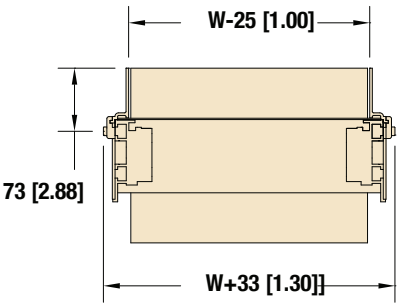

-3
63.5 mm (2.5 in) High
Aluminum High Side

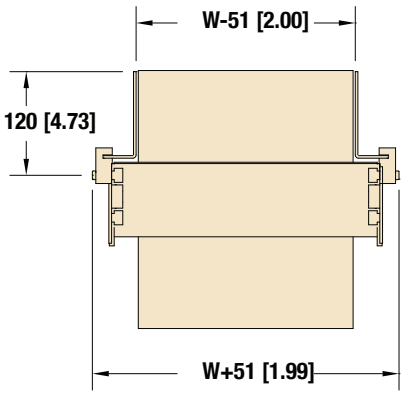

-4
102 mm (4 in) High
Stainless Steel High Side

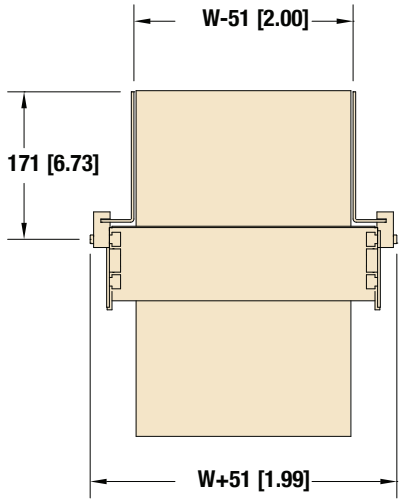

-6
152 mm (6 in) High
Stainless Steel High Side

Dimensions = mm (in)

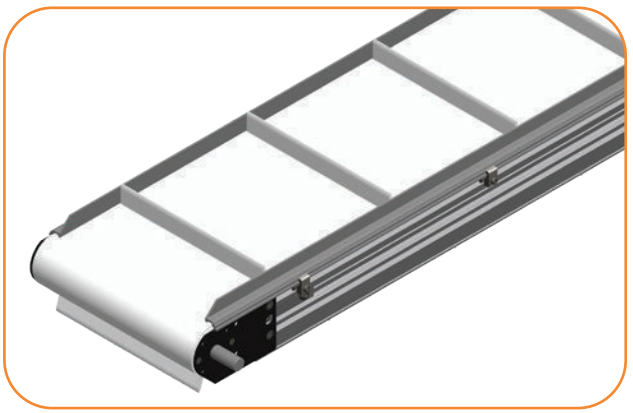

02
25 mm (1 in) High Aluminum High Side

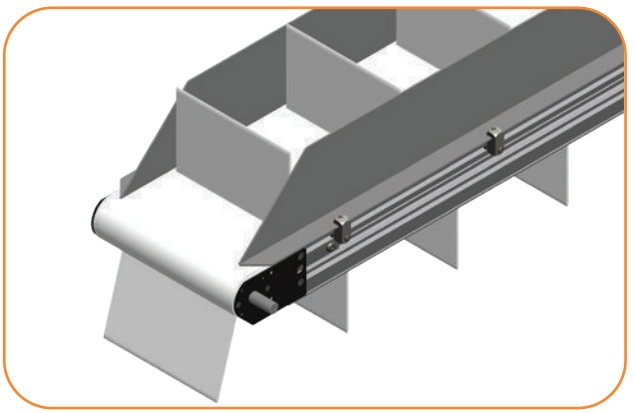

06
152 mm (6 in) High Stainless Steel High Side

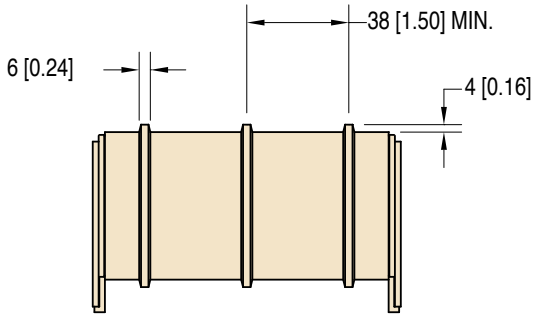

Specifications

- Used to create moving product lanes along the conveyor length
- 102 to 1,219 mm (4 to 48 in) wide conveyors
- Up to 9 ribs across the width
- Minimum center distance between ribs = 38 mm (1.5 in)
- K6 urethane rib

Rib Belts

Base Belt	Belt Thickness	Surface Material	Color	Coefficient of Friction	V-Guided	Maximum Part Temperature	FDA Approved	Chemical Resistance
Wide Cleated Base	1.5 (0.06)	Urethane	White	Medium	X	212°F (100°C)	Yes	Good

Standard Belt Selection Guide

Standard belt material is stocked at Dorner, then cut & spliced at the factory for fast conveyor shipment.

Belt Type - Finger Splice	Belt Type - Plastic Clipper	Belt Type - Metal Clipper	Belt Specifications	Thickness	Surface Material	Carcass Material	Maximum Part Temperature	Coefficient of Friction	FDA Approved	Anti-Static	ESD	Chemical Resistance	Special Characteristics or Applications
01	A1	1A	FDA Accumulation	1.7 (0.067)	Urethane	Polyester	212˚F (100˚C)	Low	x	x		Good	Packaging, clean room and inspection
02	A2	2A	General Purpose	1.8 (0.071)	Urethane	Polyester	212˚F (100˚C)	Med	x	x		Good	Most versatile belt offering
03	A3	3A	FDA High Friction	1.7 (0.067)	Urethane	Polyester	212˚F (100˚C)	High	x	x		Good	Packaging, clean room and inspection
05	A5	5A	Accumulation	1.2 (0.047)	Urethane	Polyester	212˚F (100˚C)	V-Low	x	x		Good	Accumulation of products
06	A6	6A	Static Dissipative	1.6 (0.063)	Urethane	Polyester	176˚F (80˚C)	Low		x	x	Good	Electronics Handling
08	A8	8A	High Friction	2.1 (0.083)	PVC	Polyester	158˚F (70˚C)	V-High		x		Poor	Conveys up to 35˚ inclines*

Dim = mm (in)

Note: See below for splice details. Plastic Clipper splice requires longer lead times. Clipper splice not available on Z-Frame Series Conveyors.

Note: Conveyors wider than 40" (1,016 mm) require V-Guide belt tracking

Note: Belts with V-guiding may have a slight high spot or rib on the top surface. This rib would run longitudinally along the center of the belt. Consult factory with applications for which this may cause interference.

*Incline varies due to factors like dust, fluids and part material.

BELT SPLICING

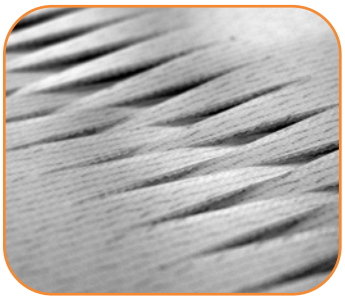

Finger Splice

All belts are available with a standard Thermoformed finger splice. This splice makes the belt continuous and is virtually undetectable. Splice bonding methods vary by belt type. Consult factory for details.

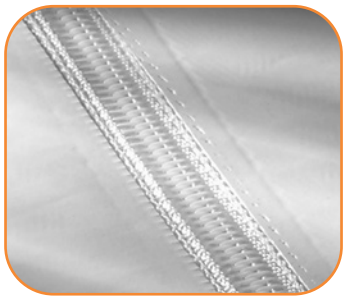

Plastic Clipper**

An optional plastic clipper splice is available for quick removal of belts or when conveyors are installed in tight spaces.

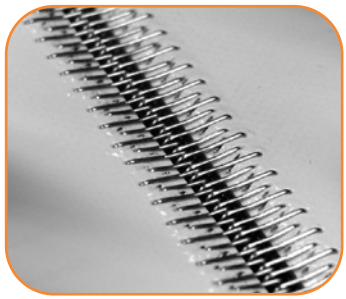

Metal Clipper**

An optional metal clipper splice is also available for quick removal of belts or when conveyors are installed in tight spaces.

*** See belt charts for compatibility. Not for use with 3200 Series Nose Bar Transfer option. Plastic and Metal Clippers are slightly thicker than base belt. Contact factory for details.*

Specialty Belt Selection Guide

Specialty belt material is not stocked at Dorner and needs to be custom ordered for your special conveyor needs.

Belt Type - Finger Splice	Belt Type - Plastic Clipper	Belt Type - Metal Clipper	Belt Specifications	V-Guideable	8 mm (5/16 in) Nose Bar	16 mm (5/8 in) Nose Bar	Belt Thickness	Surface Material	Maximum Part Temperature	Coefficient of Friction	FDA Approved	Anti-Static	Static Conductive	Chemical Resistance	Special Characteristics or Applications
19			Nose bar High friction		x	x	0.7 (0.03)	Urethane	212˚F (100˚C)	High	x	x		Good	8 mm (5/16 in) Nose bar, high friction
50			Heat Resistant				1.3 (0.05)	Silicone	356˚F (180˚C)	Low		x		V-Good	High temperature
53			Translucent		x	x	0.02 (0.5)	Urethane	212˚F (100˚C)	V-Low	x			Good	Back lit inspection
54	F4	4F	FDA Sealed Edge**	x			1.6 (0.06)	Urethane	176˚F (80˚C)	Low	x	x		Good	Packaging, clean room and inspection
55	F5	5F	FDA Sealed Edge**	x			1.6 (0.06)	Urethane	176˚F (80˚C)	High	x	x		Good	Packaging, clean room and inspection
56		6F	Cut Resistant	x			2.1 (0.08)	Urethane	212˚F (100˚C)	Med.		x		Good	Oily product release, metal stamping
57		7F	Cut Resistant	x			2.5 (0.10)	Nitrile	176˚F (80˚C)	Med.		x		Poor	Felt-like, dry metal stamping, glass and ceramic
58		8F	Cut Resistant	x			1.6 (0.06)	Urethane	194˚F (90˚C)	Low		x		Good	Surface gold colored
59	F9	9F	Color Contrasting	x			1.6 (0.06)	PVC	158˚F (70˚C)	Med.		x		Poor	Black colored, hides overspray from ink jet
60	G0	0G	Color Contrasting	x		x	0.05 (1.3)	Urethane	212˚F (100˚C)	Low	x	x		Good	Green colored
61	G1	1G	Color Contrasting	x		x	0.05 (1.3)	Urethane	212˚F (100˚C)	Low	x			Good	Blue colored
63		3G	Electrically Conductive	x			0.05 (1.2)	Urethane	176˚F (80˚C)	Low		x	x	Good	Static conductive, electronics handling
64		4G	High Friction	x			4.4 (0.17)	PVC	176˚F (80˚C)	V-High		x		Poor	Dark Green colored, rough top surface, product cushioning, incline/decline apps
66		6G	Chemical Resistant	x			1.7 (0.07)	Polyester	212˚F (100˚C)	Med.	x	x		V-Good	Good cut resistance, metal stamping apps
67			Low Friction Cleated (Do not use with Z-Frame)	x			1.6 (0.06)	Polyester	212˚F (100˚C)	n/a	x			Good	Excellent product release, consult factory for part number and how to specify low friction
68	G8		FDA Encased**	x			1.5 (0.06)	Urethane	176˚F (80˚C)	Low	x	x		Good	Urethane enclosed for added sanitary protection
69	G9		FDA Encased**	x			2.2 (0.09)	Urethane	176˚F (80˚C)	Med.	x	x		Good	Urethane enclosed for added sanitary protection
71			FDA High Release	x			1.8 (0.07)	Urethane	212˚F (100˚C)	Low	x			Good	High release cover
72			Nose bar	x		x	1.2 (0.05)	Urethane	212˚F (100˚C)	Med.	x	x		Good	16 mm (5/8 in) Nose bar, medium friction
73			Nose bar Low friction		x	x	0.9 (0.03)	Urethane	212˚F (100˚C)	Low	x	x		Good	8 mm (5/16 in) Nose bar, low friction
75			Black Urethane	x			1.5 (0.06)	Urethane	176˚F (80˚C)	Low		x		Good	
76			Black Nose bar	x		x	1.2 (0.05)	Urethane	176˚F (80˚C)	Med.		x		Good	Black Color, 8 mm (5/16 in) nose bar
77			High Friction, green	x			2.2 (0.09)	Urethane	212˚F (100˚C)	High		x		Good	Green color, high friction, urethane, grooved
78			Chemical, Polyolefin, HF				1.4 (0.05)	Polyolefin	140˚F (60˚C)	High	x			V-Good	Chemical resistant, food grade
79			Chemical, Polyolefin, LF				1.3 (0.05)	Polyolefin	140˚F (60˚C)	Med.	x	x		V-Good	Chemical resistant, food grade
80			High Friction, silicone	x		x	1 (0.04)	Silicone	176˚F (80˚C)	High	x			Good	Silicone material, high friction
81			Low Friction, silicone	x		x	1 (0.04)	Silicone	212˚F (100˚C)	Med.	x			Good	Silicone material, low to medium friction

Dim = mm (in)
Note: Clipper Splices not available on Z-Frame Series Conveyors.
Note: Conveyors wider than 1,016 mm (40 in) require V-Guide belt tracking

Note: Belts with V-Guiding may have a slight high spot or rib on the top surface. This rib would run longitudinally along the center of the belt. Consult factory with applications for which this may cause interference.
** Not available in 51 mm (2 in) widths

Cleated Belt Profiles

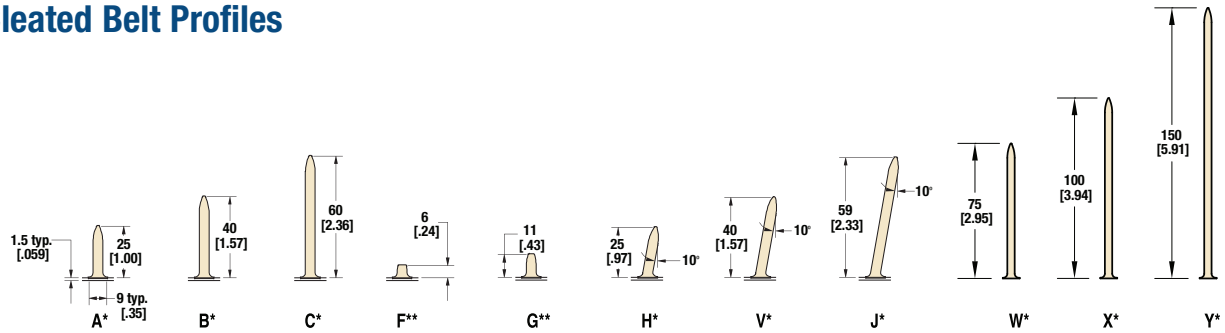

Cleated Belts

Cleat Type	Base Belt	Belt Thickness	Surface Material	Color	Coefficient of Friction	V-Guided	Maximum Part Temperature	FDA Approved	Chemical Resistance
A,B,C,F,G,H,V,J	Standard Base Belt	1.4 (.055)	Urethane	White	High	X	212°F (100°C)	Yes	Good
A,B,C,F,G,H,V,J	Low Friction Base Belt	1.5 (0.06)	Urethane	Natural	Low	X	212°F (100°C)	Yes	Good
W,X,Y	Tall Cleated Base	2.2 (0.088)	Urethane	White	High	X	212°F (100°C)	Yes	Good
A,B,C	Wide Cleated Base	1.5 (0.06)	Urethane	White	Medium	X	212°F (100°C)	Yes	Good

Cleated Belt Spacing

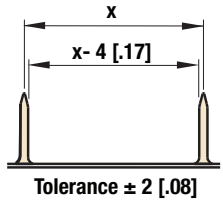

- Minimum cleat spacing = 50 mm (2 in)
- Maximum cleat spacing for 457 mm (18 in) and wider conveyors = 508 (20 in)
- Maximum cleat spacing for 2.1 m (7 ft) and longer conveyors = 508 (20 in)
- 457 mm (18 in) and wider conveyors are limited to 2.1 m (7 ft) long

50 to 610 mm (2 to 24 in) wide

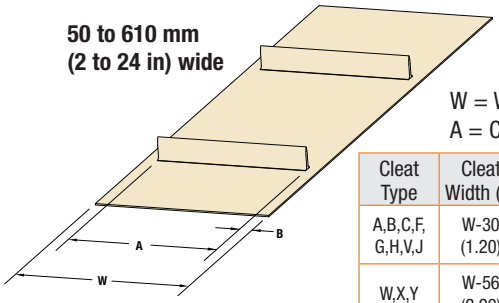

W = Width
A = Cleat Width

Cleat Type	Cleat Width (A)	Offset (B)
A,B,C,F, G,H,V,J	W-30 (1.20)	15 (0.60)
W,X,Y	W-56 (2.20)	28 (1.10)

660 to 1219 (26 to 48 in) wide

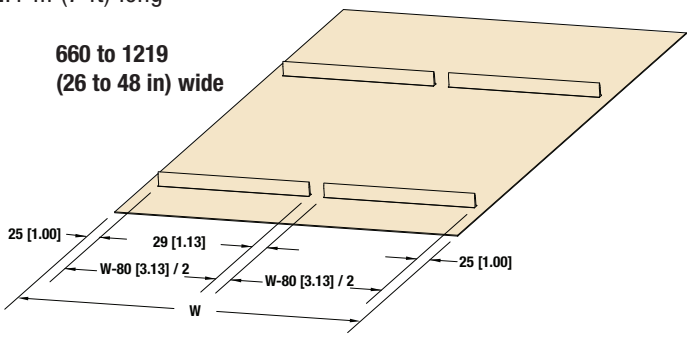

Sidewall Cleated Belts

Sidewall Cleated Belts are used for small part handling.

W = Conveyor Belt Width
A = Pocket Width

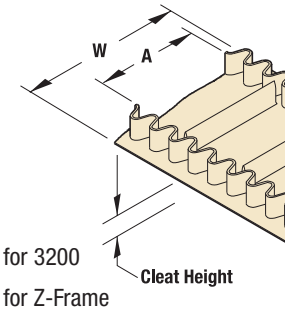

A = W - 102 mm (4.0 in) for 3200

A = W - 127 mm (5.0 in) for Z-Frame

Sidewall Cleated Belt

Cleat Type	Cleated Height	Sidewall Height	Belt Thickness	Surface Material	Color	Maximum Part Temperature	FDA Approved	Chemical Resistance
S	30 mm	30 mm	1.5 (0.06)	Urethane	White	212°F (100°C)	x	Good
T	40 mm	40 mm	1.5 (0.06	Urethane	White	212°F (100°C)	x	Good
U	30 mm	40 mm	1.5 (0.06)	Urethane	White	212°F (100°C)	x	Good

Note: Minimum cleat spacing is approximately 2" (50 mm). Consult factory for special cleat information

Note: 152 mm (6 in) minimum width for 3200 conveyors and 203 mm (8 in) minimum width for Z-Frame conveyors. 610 mm (24 in) maximum conveyor width.

Precision Move Belting

Standard Belt Selection Guide

Standard belt material is stocked at Dorner,then cut and spliced at the factory for fast conveyor shipment.

Part Number Reference	Belt Specifications	Tooth Pitch	Thickness	Material	Top Surface	Color	Maximum Part Temperature	Coefficient of Friction	FDA Approved	Chemical Resistance	Max Width	Cleat Heights
N	Flat Belt	H 13 (0.5)	4.1 (0.160)	Urethane with Kevlar Cords	Smooth	Natural	160˚F (71˚C)	Med	No	Good	18 (457)	N/A
A, B, C	Cleated Belt	H 13 (0.5)	4.1 (0.160)	Urethane with Kevlar Cords	Smooth	Natural	160˚F (71˚C)	N/A	No	Good	18 (457)	6 (¼), 13 (½), 25 (1)
H, F	Fixtured Belt	H 13 (0.5)	4.1 (0.160)	Urethane with Kevlar Cords and Steel Inserts	Smooth	Natural	160˚F (71˚C)	Med	No	Good	18 (457)	N/A

Dim = mm (in)

Precision Move Cleats

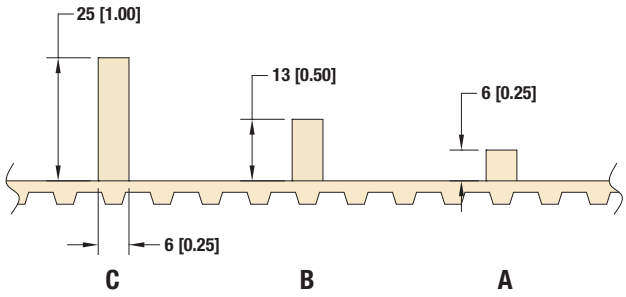

Specifications

- Cleats must be located over the timing belt tooth
- Cleat spacing increments = 13 mm (0.5 in)
- Minimum cleat spacing = 25 mm (1.0 in)
- Cleat spacing accuracy
  - Spacing 25 to 229 mm (1 to 9 in) = ± .5 mm (0.020 in)
  - Spacing 241 to 457 mm (9.5 to 18 in) = ± .6 mm (0.025 in)
  - Spacing 470 to 686 mm (18.5 to 27 in) = ± .7 mm (0.030 in)
- Cleat angle tolerance to base belt = perpendicular ± 1°

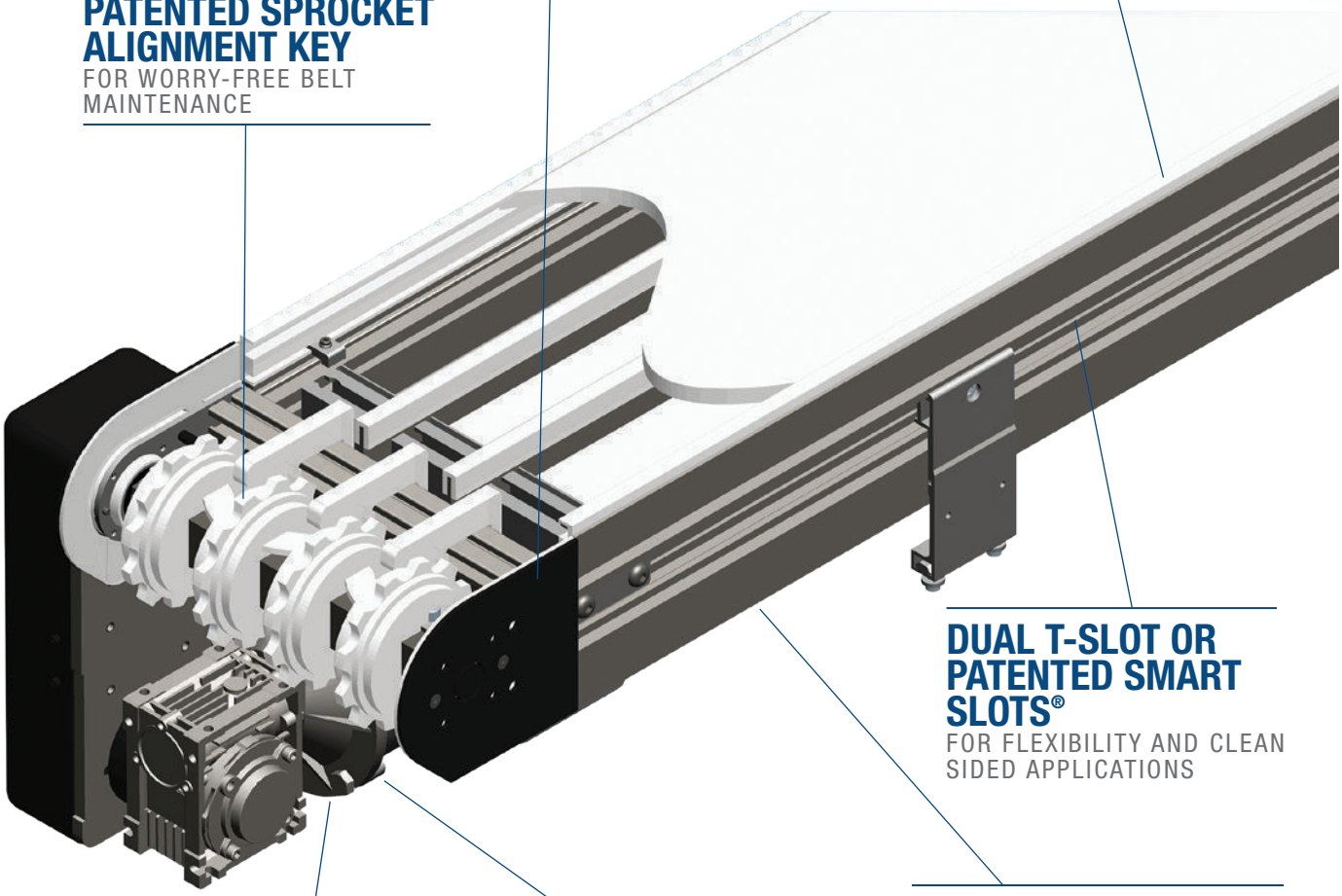

FLUSH TAIL DESIGN
LOCATES BEARING INSIDE FRAME TO FIT IN TIGHT SPACES

ALL BELTS FULLY CONTAINED IN UHMW GUIDING
FOR MAINTENANCE-FREE TRACKING

PATENTED SPROCKET ALIGNMENT KEY
FOR WORRY-FREE BELT MAINTENANCE

DUAL T-SLOT OR PATENTED SMART SLOTS®
FOR FLEXIBILITY AND CLEAN SIDED APPLICATIONS

PATENTED STRAIGHT BELT TENTING SYSTEM
PROVIDES BELT TAKE-UP WITHOUT CATENARY LOOPS

eDRIVE®
LOW INERTIA MOTOR WITH ALUMINUM BODY PROVIDES LOW TEMPERATURE IN SMALL PACKAGE

eDRIVE®
SEALED FOR LIFE ALUMINUM BODY GEARBOXES FOR REDUCED TEMPERATURE AND LOCATION FLEXIBILITY

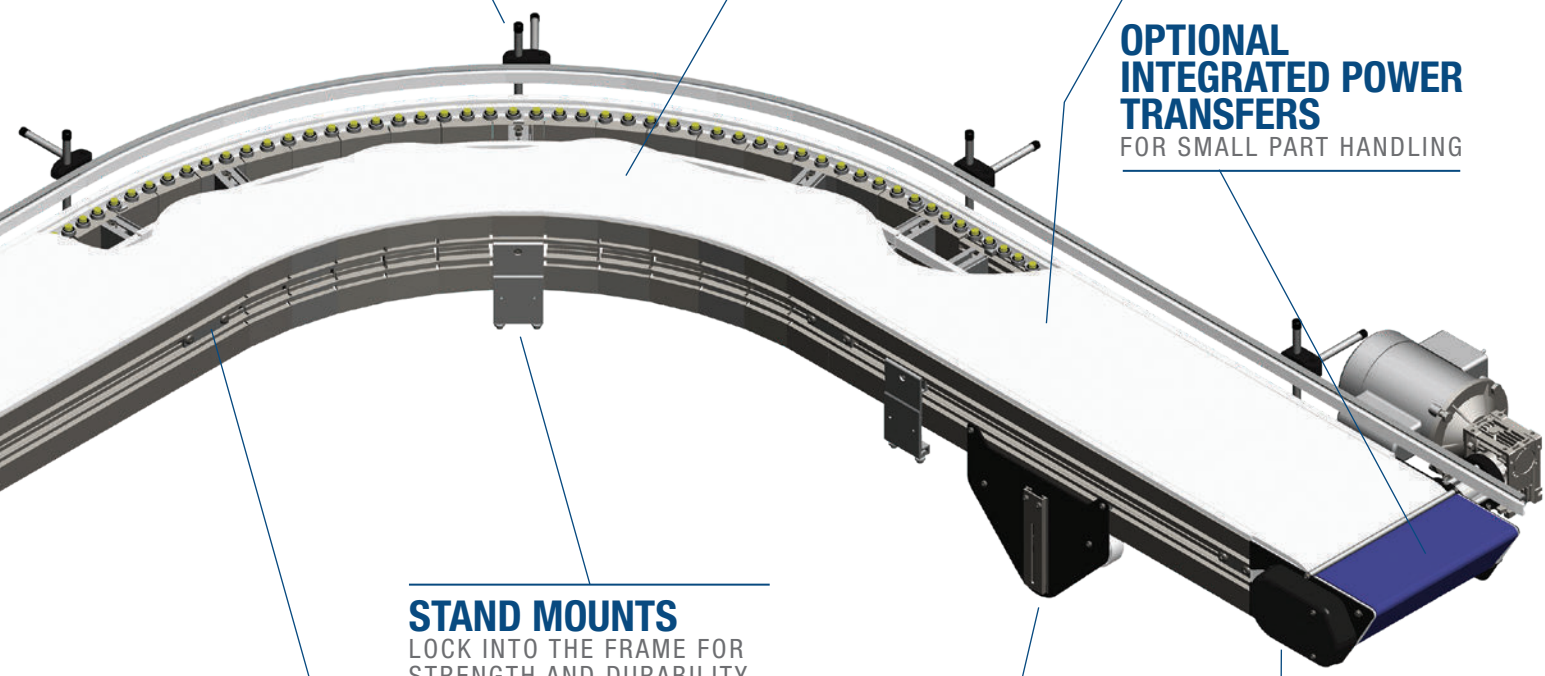

STANDARD GUIDING OPTIONS

FLEXIBLE BELT CONTAINMENT SYSTEM

ALLOWS FOR TAB OR BEARING RETENTION METHOD FOR UP TO 4 CORNER MODULES (BEARINGS LOCATED ON BELT,BELT REMOVED FOR CLARITY)

(11) STANDARD BELT OPTIONS

INCLUDING FRICTION INSERT, ROLLER TOP AND HIGH STRENGTH CURVE BELT

OPTIONAL INTEGRATED POWER TRANSFERS

FOR SMALL PART HANDLING

STAND MOUNTS

LOCK INTO THE FRAME FOR STRENGTH AND DURABILITY, YET MOVABLE ANYWHERE ALONG FRAME LENGTH

TAIL PLATES

MINIMAL LENGTH WITH FOR MAXIMUM T-SLOT EXPOSURE

INBOARD TYPE FRAME CONNECTION JOINT

IMPROVES STRENGTH WHILE KEEPING T-SLOTS OPEN

ALL CURVE BELTS USE WEIGHTED TAKE-UP SYSTEM

FOR PROVIDING BELT TAKE-UP WITHOUT CATENARY LOOPS

Shown with T-Slot Frame

Specifications

- Loads up to 455 kg (1000 lbs)
- Belt speeds up to 76 m/min (250 ft/min)
- Belt widths: 152 to 1219 mm (6 to 48 in)
- Conveyor lengths: 914 to 25,375 mm (36 to 999 in)
- UHMW wear strip belt support
- One revolution of the drive pulley moves the belt approximately 305 mm (12 in)
- Rigid, 142 mm (5.6 in) high, anodized aluminum frame
- Available in friction top belts up to 610 mm (24 in) wide
- Optional: two (2) SmartSlot® mounting locations for ¼-20 or M6-1.0 fasteners
- Completely contained belt eliminates catenary sag and reduces pinch points

Flush Top, Low Side Frame

OPTIONAL: Nose Bar Tail

Includes sealed bearings with 20 mm (0.79 in) diameter rollers. Available at either end for small part transfers. *(46 mm (1.8 in) effective diameter with belt thickness)*

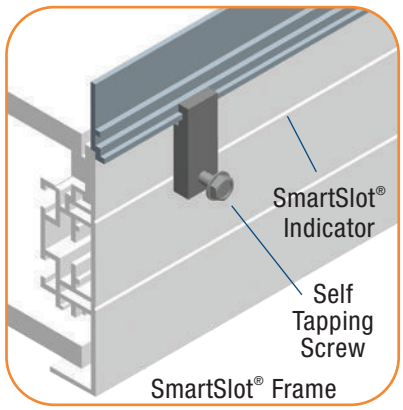

Available in T-Slot or SmartSlot® Frame

3200 Series Straight Modular Belt Conveyor

32 MT E M WW - LLL 1 D I A PP PP BB

- **Belt Type**
- **Profile (D side)**
- **Profile (A side)**
- **Drive Shaft Position: A or D**
- **Idler Tail Type: 0** = Standard idler, **1** = Nosebar
- **Drive Tail Type: 0** = Standard 76 mm (3 in); **1** = Standard with dual output shaft; **2** = Nosebar, WTU approx 610 mm (24 in) from end, 457 mm (18 in) from frame end); **3** = Nosebar, WTU approx 330 mm (13 in) from end, 178 mm (7 in) from frame end)
- **Mounting Bracket Options: 1** = Conveyor to include mounting brackets, **3** = Conveyor not to include mounting brackets
- **Conveyor Length Reference** (in inches)
- **Conveyor Width Reference**
- **Documentation Language: M** = US, **U** = Europe
- **Frame type: MT** = T Slot Frame, **MS** = Smart Slot Frame

Order gearmotor mounting packages and gearmotors separately, see pages 54-69.
For support stands and accessories, see page 80-85.

End Drive Model

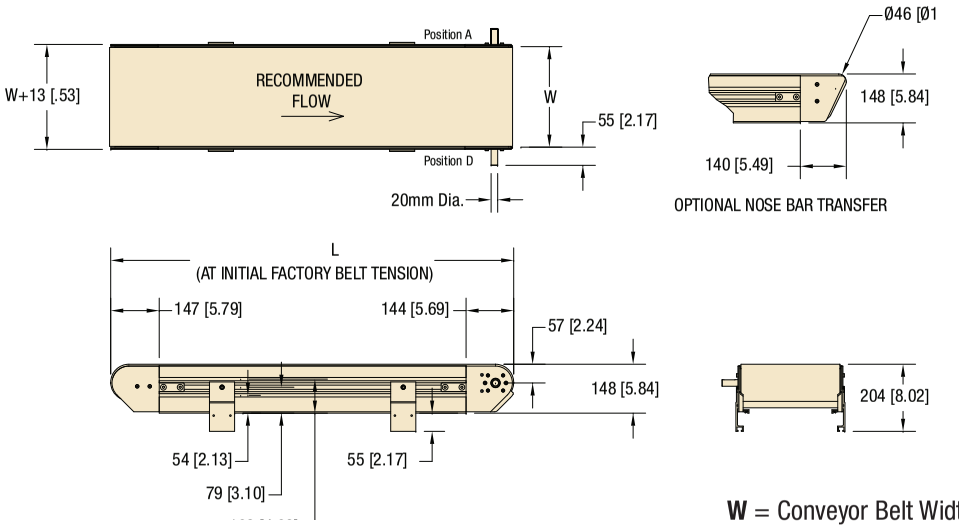

W = Conveyor Belt Width **Dim** = mm (in)

Nose Bar Drive Model

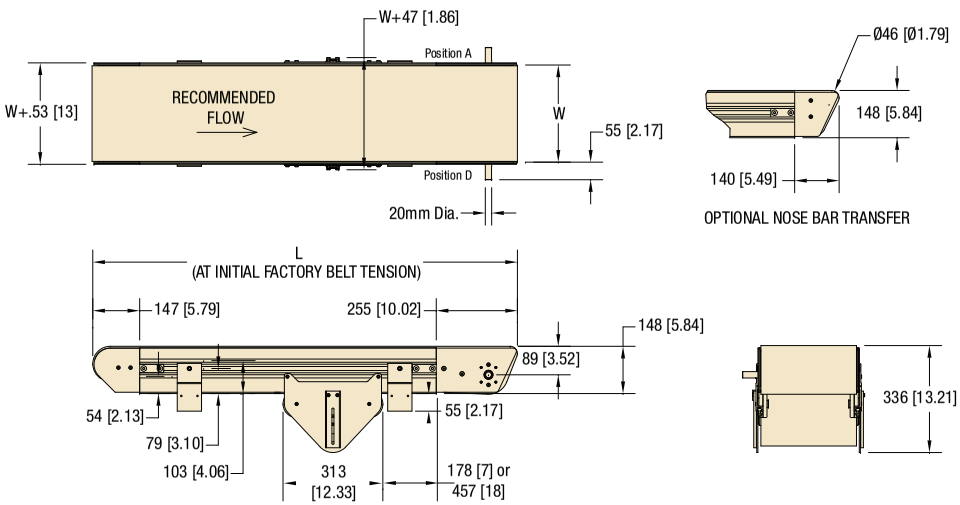

W = Conveyor Belt Width **Dim** = mm (in)

Drive Shaft Position

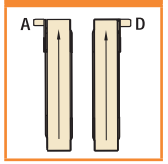

Belt Width Table

Conveyor Width	Belt Width	Outside Frame Width
06	150.1 (5.91)	168.1 (6.62)
08	199.9 (7.87	218.2 (8.59)
10	249.9 (9.84)	268.2 (10.56)
12	300.0 (11.81)	318.3 (12.53)
14	350.0 (13.78)	368.0 (14.49)
16	400.1 (15.75)	418.1 (16.46)
18	450.1 (17.72)	468.1 (18.43)
20	500.1 (19.69)	518.2 (20.40)
22	549.9 (21.65)	568.2 (22.37)
24	599.9 (23.62)	618.2 (24.34)
26	650.0 (25.59)	668.3 (26.31)
28	700.0 (27.56)	718.1 (28.27)
30	750.1 (29.53)	768.1 (30.24)
32	800.1 (31.50)	818.1 (32.21)
34	849.9 (33.46)	868.2 (34.18)
36	899.9 (35.43)	918.2 (36.15)
38	949.9 (37.40)	967.7 (38.12)
40	1000.0 (39.37)	1018.0 (40.08)
42	1050.0 (41.34)	1068.1 (42.05)
44	1100.1 (43.31)	1118.1 (44.02)
46	1149.6 (45.28)	1168.1 (45.99)
48	1199.9 (47.24)	1218.2 (47.96)

Standard Sizes

Conveyor Width Reference	06	02 increments **up to...**	48
Conveyor Length Reference	036	0001 increments **up to...**	999
Conveyor Length (L)	914 mm (36 in)	25 mm (1 in) increments **up to...**	25,375 mm (999 in)

NOTE: Conveyor longer than 3,658 mm (12 ft) will be constructed using a multiple piece frame. Consult factory for locations of these frame joints. Support is recommended at each frame joint.

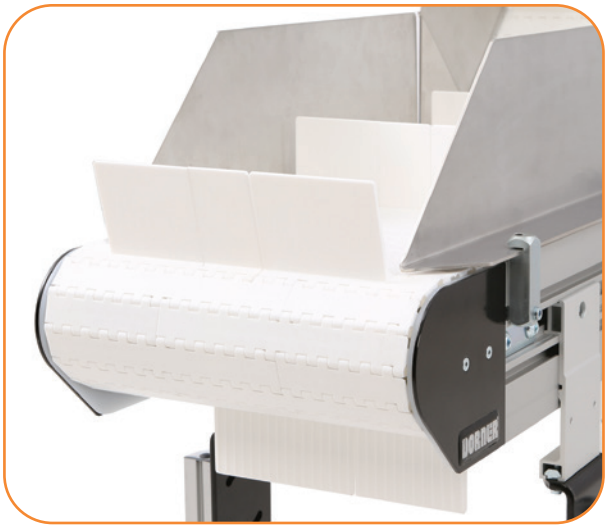

Shown with T-Slot Frame

Specifications

- Loads up to 227 kg (500 lbs)
- Belt speeds up to 76 m/min (250 ft/min)
- Belt widths: 203 to 610 mm (8 to 24 in)
- Conveyor lengths: 914 to 25,375 mm (36 to to 999 in)
- UHMW wear strip belt support
- One revolution of the drive pulley moves the belt approximately 305 mm (12 in)
- Rigid, 142 mm (5.6 in) high, anodized aluminum frame
- Available in 25 mm (1 in) and 76 mm (3 in) high cleats
- Optional two (2) SmartSlot® mounting locations for ¼-20 or M6–1.0 fasteners
- Completely contained belt eliminates catenary sag and reduces pinch points

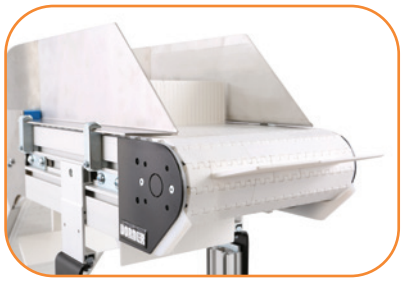

25 mm (1 in) and 76 mm (3 in) Cleats

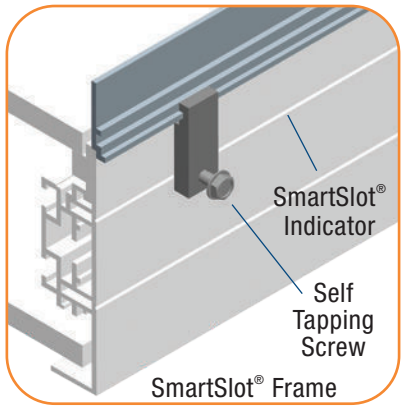

Available in T-Slot or SmartSlot® Frame

3200 Series Straight Cleated Modular Belt Conveyor

32 MT C M WW - LLL 1 D I A P BB SS

- **Cleat Spacing** (in inches)
- **Belt Type**
- **Profile Height**
- **Drive Shaft Position: A or D**
- **Idler Tail Type: 0** = Standard idler
- **Drive Tail Type: 0** = Standard 76 mm (3 in) , **1** = Dual output shaft, **2** = 76 mm (3 in) Tension drive tail
- **Mounting Bracket Options: 1** = Conveyor to include mounting brackets, **3** = Conveyor not to include mounting brackets
- **Conveyor Length Reference** (in inches)
- **Conveyor Width Reference**
- **Documentation Language: M** = US, **U** = Europe
- **Frame Type: MT** = T Slot Frame, **MS** = Smart Slot Frame

Order gearmotor mounting packages and gearmotors separately, see pages 54-69.
For support stands and accessories, see page 80-85.

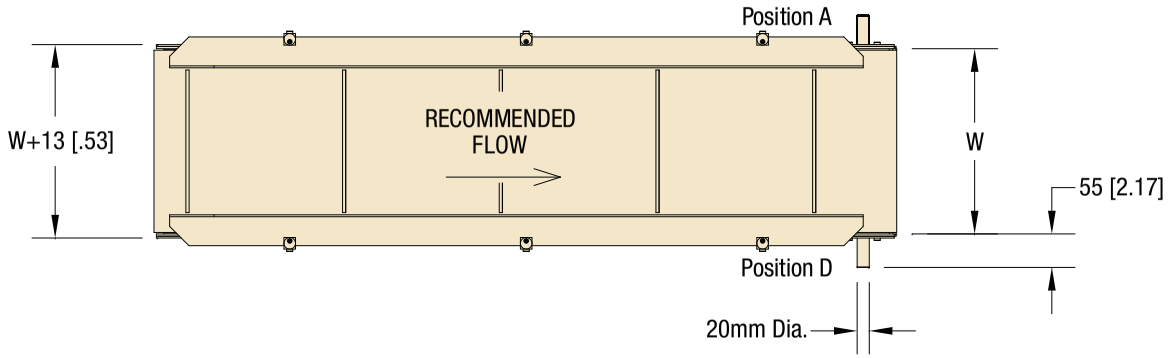

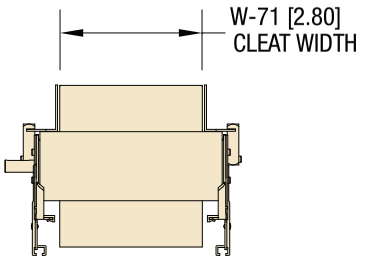

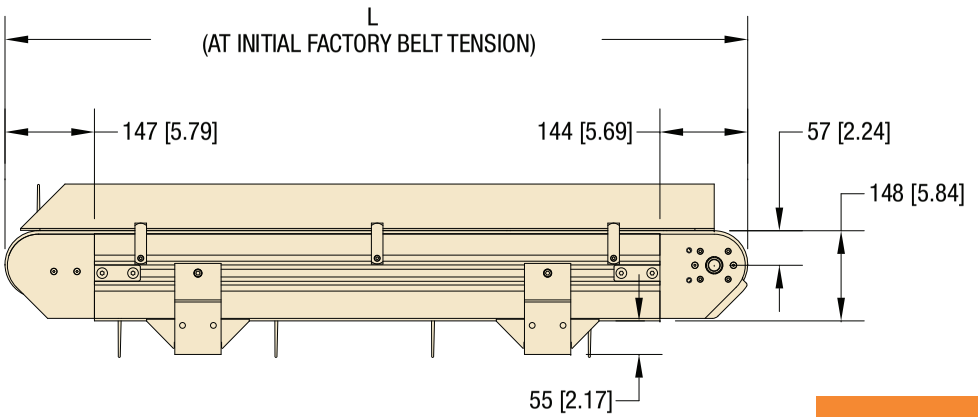

Drive Shaft Position

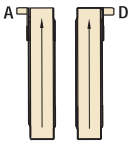

W = Conveyor Belt Width **Dim** = mm (in)

Belt Width Table

Conveyor Width	Belt Width	Outside Frame Width	Cleat Width	Pocket Width
203.2 (08)	199.9 (7.87)	218.2 (8.59)	133.9 (5.27)	142.0 (5.59)
254.0 (10)	249.9 (9.84)	268.2 (10.56)	183.9 (7.24)	192.0 (7.56)
304.8 (12)	300.0 (11.81)	318.3 (12.53)	233.9 (9.21)	242.1 (9.53)
355.6 (14)	350.0 (13.78)	368.0 (14.49)	284.0 (11.18)	291.8 (11.49)
406.4 (16)	400.1 (15.75)	418.1 (16.46)	334.0 (13.15)	341.9 (13.46)
457.2 (18)	450.1 (17.72)	468.1 (18.43)	384.0 (15.12)	391.9 (15.43)
508.0 (20)	500.1 (19.69)	518.2 (20.40)	434.0 (17.09)	442.0 (17.40)
558.8 (22)	549.1(21.65)	568.2 (22.37)	483.9 (19.05)	492.0 (19.37)
609.6 (24)	599.9 (23.62)	618.2 (24.34)	533.9 (21.02)	542.0 (21.34)

Standard Sizes

Conveyor Width Reference	08	02 increments **up to...**	24
Conveyor Belt Width (W)	203 mm (8 in)	51 mm (2 in) increments **up to...**	610 mm (24 in)
Module Length Reference	036	001 increments **up to...**	999
Module Length (L_1)	914 mm (36 in)	25 mm (1 in) increments **up to...**	25,375 mm (999 in)

NOTE: Conveyor longer than 12' (3,658 mm) will be constructed using a multiple piece frame. Consult factory for locations of these frame joints. Support is recommended at each frame joint.

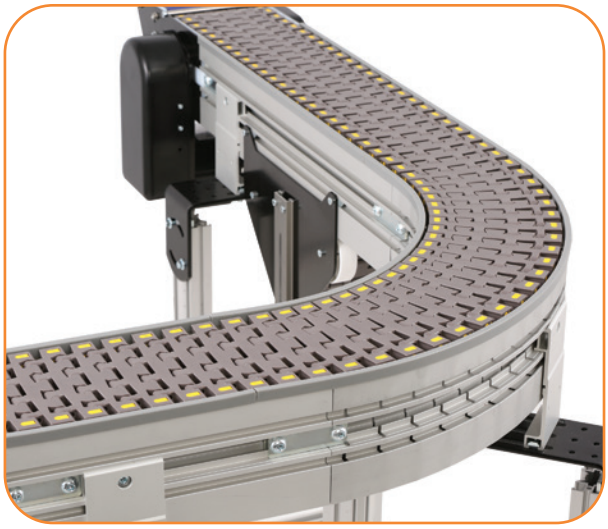

Shown with T-Slot Frame

Specifications

- Loads up to 227 kg (500 lbs)
- Belt speeds up to 122 m/min (400 ft/min)
- Belt widths: 152 to 914 mm (6 to 36 in)
- Conveyor lengths: 914 mm to 25,375 mm (36 to 999 in)
- Curves available in 45°, 90° and 180° degree angles
- UHMW wear strip belt support
- One revolution of the drive pulley moves the belt approximately 305 mm (12 in)
- Rigid, 142 mm (5.6 in) high, anodized aluminum frame
- Optional two (2) SmartSlot® mounting locations for ¼-20 or M6-1.0 fasteners
- Weighted Take-up eliminates catenary sag and reduces pinch points

Flush Top, Low Side Frame
High Strength Curve Only

Powered Transfer Infeed or Outfeed

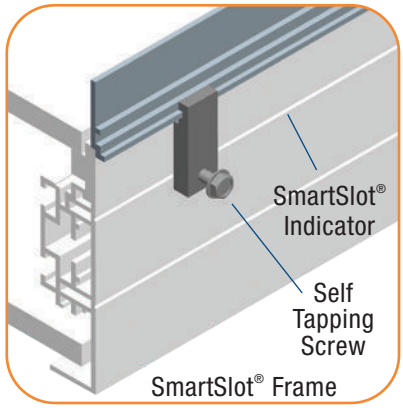

Available in T-Slot or SmartSlot® Frame

Weighted Take-Up Module
Eliminates catenary sag and improves safety

Multiple Curve Configurations

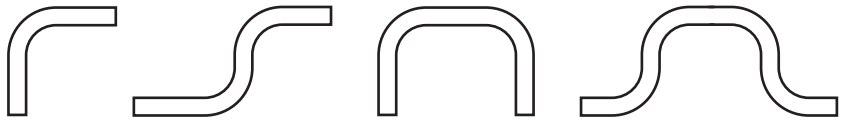

Order gearmotor mounting packages and gearmotors separately, see pages 54-69.
For support stands and accessories, see page 80-85.

Modular Belt Curve Types

Basic Single Curve

- Belt is retained by UHMW edge guides
- Turn inside radius of 2.2X the belt width
- 1 Curve module only
- Not a true low side conveyor
- Belt widths:
  - 203 mm (8 in) minimum
  - 914 mm (36 in) maximum
  - 51 mm (2 in) width increments

Low Backpressure Roller Top Curve

- 5 mm wide x 15 mm diameter rollers
- 51 mm (2 in) roller spacing across the width and length
- Belt is retained by UHMW edge guides
- Turn inside radius of 2.2X the belt width
- 1 Curve module only
- Not a true low side conveyor
- Belt widths:
  - 203 mm (8 in) minimum
  - 914 mm (36 in) maximum
  - 51 mm (2 in) width increments

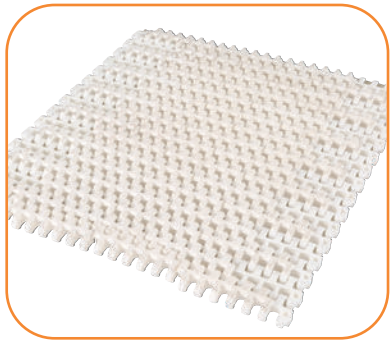

Friction Insert Curve

- 3.6 mm thick TPE friction insert
- Multiple insert spacing available
- Belt is retained by UHMW edge guides
- Turn inside radius of 2.2X the belt width
- 1 Curve module only
- Not a true low side conveyor
- Belt widths:
  - 203 mm (8 in) minimum
  - 914 mm (36 in) maximum
  - 51 mm (2 in) width increments

High Strength Tab Curve

- Belt is retained by tabs below the belt surface
- Turn inside radius of 2X the belt width
- Up to 2 Curve modules
- A true low side conveyor capable of running product wider than the belt
- 2.7X stronger than single curve belt
- Belt widths: 152, 305, 457, 610 and 762 mm (6, 12, 18, 24 and 30 in)

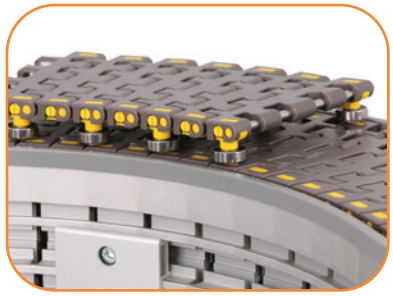

High Strength Bearing Curve

- Belt is retained by ball bearings below the belt surface
- Turn inside radius of 2X the belt width
- Up to 4 Curve modules
- A true low side conveyor capable of running product wider than the belt
- 2.7X stronger than single curve belt
- 6" minimum width
- Capable of up to (400 ft/min)
- Belt widths: 152, 305, 457, 610 and 762 mm (6, 12, 18, 24 and 30 in)

Cross Sections

Single Curve

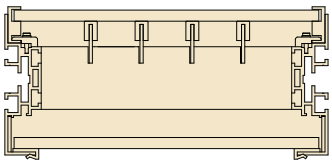

High Performance Tab Curve

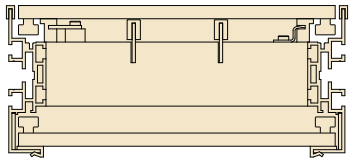

High Performance Bearing Curve

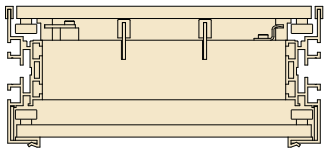

3200 Series Curved Modular Belt Conveyor - Infeed Module

32 MT 1 M WW - LLL 1 I PP PP BB - 01

- **Sequence Number**
- **Belt Type**
- **Profile (D side)**
- **Profile (A side)**
- **Idler Tail Code:** **N** = Standard idler, **R** = with transfer roller, **P** = with power transfer, A side, **T** = with power transfer, D side, **A** = Output shaft A side, **D** = Output shaft D side
- **Mounting Bracket Options:** **1** = Conveyor to include mounting brackets, **3** = Conveyor not to include mounting brackets
- **Conveyor Length Reference** (in inches)
- **Conveyor Width Reference**
- **Documentation Language:** **M** = US, **U** = Europe
- **Frame Type:** **MT** = T Slot Frame, **MS** = Smart Slot Frame

3200 SERIES CURVED MODULAR BELT CONVEYOR - CURVE MODULE

32 MT 2 M WW - AAA 1 D PP PP BB - 01

- **Sequence Number**
- **Belt Type**
- **Profile (D side)**
- **Profile (A side)**
- **Direction:** **L** = Left hand, **R** = Right hand
- **Mounting Bracket Options:** **1** = Conveyor to include mounting brackets, **3** = Conveyor not to include mounting brackets
- **Angle:** **045** = 45°, **090** = 90°, **180** = 180°
- **Conveyor Width Reference**
- **Documentation Language:** **M** = US, **U** = Europe
- **Frame Type:** **MT** = T Slot Frame, **MS** = Smart Slot Frame

3200 SERIES CURVED MODULAR BELT CONVEYOR - INTERMEDIATE MODULE

32 MT 3 M WW - LLL 1 PP PP BB - 01

- **Sequence Number**
- **Belt Type**
- **Profile (D side)**
- **Profile (A side)**
- **Mounting Bracket Options:** **1** = Conveyor to include mounting brackets, **3** = Conveyor not to include mounting brackets
- **Conveyor Length Reference** (in inches)
- **Conveyor Width Reference**
- **Documentation Language:** **M** = US, **U** = Europe
- **Frame Type:** **MT** = T Slot Frame, **MS** = Smart Slot Frame

3200 SERIES CURVED MODULAR BELT CONVEYOR - DRIVE MODULE

32 MT 5 M WW - LLL 1 D 1 A PP PP BB - 01

- **Sequence Number**
- **Belt Type**
- **Profile (D side)**
- **Profile (A side)**
- **Drive Shaft Position:** **A or D**
- **Weighted Take-up Location:** **1** = Approx 330 mm (13 in) from end, 178 mm (7 in) from frame end, **2** = Approx 610 mm (24 in) from end, 457 mm (18 in) from frame end
- **Drive Tail Code:** **N** = Drive tail, **R** = Transfer roller, **P** = Power transfer
- **Mounting Bracket Options:** **1** = Conveyor to include mounting brackets, **3** = Conveyor not to include mounting brackets
- **Conveyor Length Reference** (in inches)
- **Conveyor Width Reference**
- **Documentation Language:** **M** = US, **U** = Europe
- **Frame Type:** **MT** = T Slot Frame, **MS** = Smart Slot Frame

Powered Transfer

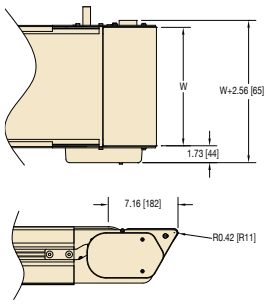

Specifications

- Powered transfer for small part, inline transfer applications
- 8 mm micro-pitch chain is series driven off of tail module
- Can be located on drive tail, idler tail or both
- Transfer parts as small as 76 mm (3 in) diameter
- Belt speeds up to 76 m/min (250 ft/min)
- Belt widths up to 610 mm (24 in) wide

End Drive Model

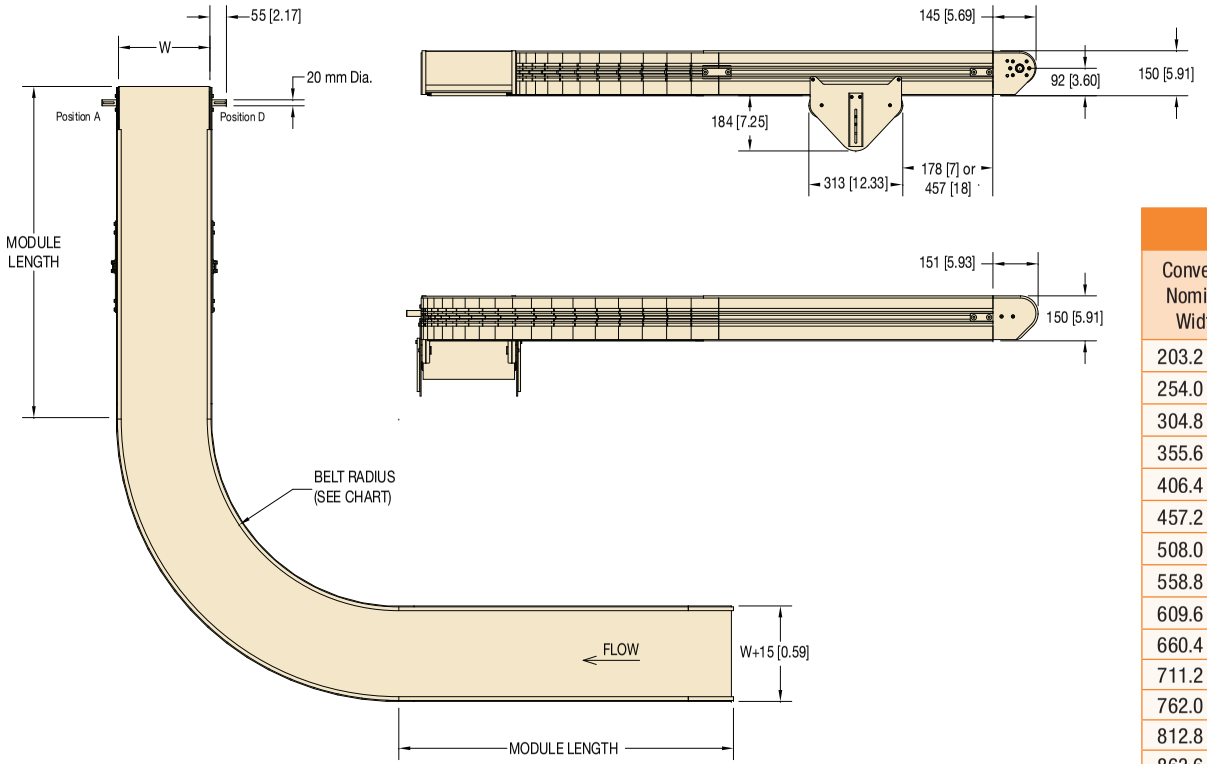

W = Conveyor Belt Width **Dim** = mm (in)

Basic Single Curve Belt Width Table

Conveyor Nominal Width	Belt Width	Outside Frame width	Inside Curve Radius	Usable Belt Width
203.2 (08)	199.9 (7.87)	218.2 (8.59)	405.9 (15.98)	186.4 (7.34)
254.0 (10)	249.9 (9.84)	268.2 (10.56)	517.7 (20.38	236.5 (9.31)
304.8 (12)	300.0 (11.81)	318.3 (12.53)	629.9 (24.80)	286.5 (11.28)
355.6 (14)	350.0 (13.78)	368.0 (14.49)	741.9 (29.21)	336.3 (13.24)
406.4 (16)	400.1 (15.75)	418.1 (16.46)	856.0 (33.70)	386.3 (15.21)
457.2 (18)	450.1 (17.72)	468.1 (18.43)	967.5 (38.09)	436.4 (17.18)
508.0 (20)	500.1 (19.69)	518.2 (20.40)	1080.0 (42.52)	486.4 (19.15)
558.8 (22)	549.1(21.65)	568.2 (22.37)	1193.5 (46.99)	536.4 (21.12)
609.6 (24)	599.9 (23.62)	618.2 (24.34)	1308.1 (51.50)	586.5 (23.09)
660.4 (26)	650.0 (25.59)	668.3 (26.31)	1417.1 (55.79)	636.5 (25.06)
711.2 (28)	700.0 (27.56)	718.1 (28.27)	1532.9 (60.35)	686.3 (27.02)
762.0 (30)	750.0 (29.53)	768.1 (30.24)	1642.6 (64.67)	736.3 (28.99)
812.8 (32)	800.1 (31.50)	818.1 (32.21)	1752.1 (68.98)	786.4 (30.96)
863.6 (34)	849.9 (33.46)	868.2 (34.18)	1869.9 (73.62)	836.4 (32.93)
152.4 (36)	899.9 (35.43)	918.2 (36.15)	1979.9 (77.95)	886.4 (34.90)

Standard Sizes

Conveyor Width Reference*	06	02 increments **up to...**	36
Conveyor Belt Width*(W)	152 mm (6 in)	51 mm (2 in) increments **up to...**	914 mm (36 in)
Module Length Reference	020	001 increments **up to...**	999
Module Length (L_1)	greater of 508 mm (20 in) or 1.5W	25 mm (1 in) increments **up to...**	25,375 mm (999 in)
Module Length (L_3)	greater of 914 mm (36 in) or 2W	25 mm (1 in) increments **up to...**	25,375 mm (999 in)

NOTE: Conveyor longer than 12' (3,658 mm) will be constructed using a multiple piece frame. Consult factory for locations of these frame joints.
*High Performance Belts available in 6", 12", 18", 24" and 30" only.
Minimum width for single curve belts = 8"

High Performance Curve Belt Width Table

Conveyor Nominal Width	Belt Width	Outside Frame width	Inside Curve Radius
152.4 (06)	152.4 (6.00)	171.2 (6.74)	304.8 (12.0)
304.8 (12)	304.8 (12.00)	323.6 (12.74)	609.6 (24.0)
457.2 (18)	457.2 (18.00)	476.0 (18.74)	914.4 (36.0)
609.6 (24)	609.6 (24.00)	628.4 (24.74)	1219.2 (48.0)
762.0 (30)	762.0 (30.00)	780.8 (30.74)	1524.0 (60.0)

Shown with T-Slot Frame

Specifications

- Loads up to 227 kg (500 lbs)
- Belt speeds up to 76 m/min (250 ft/min)
- Belt widths: 203 to 610 mm (8 to 24 in)
- Conveyor section lengths: 914 to 25,375 mm (36 to 999 in)
- Fixed angles: 5°, 10°, 15° and 30°
- One revolution of the drive pulley moves the belt approximately 305 mm (12 in)
- Rigid, 142 mm (5.6 in) high, anodized aluminum frame
- Optional two (2) SmartSlot® mounting locations for ¼-20 or M6-1.0 fasteners
- Completely contained belt eliminates catenary sag and reduces pinch points

Friction Insert Belts Available

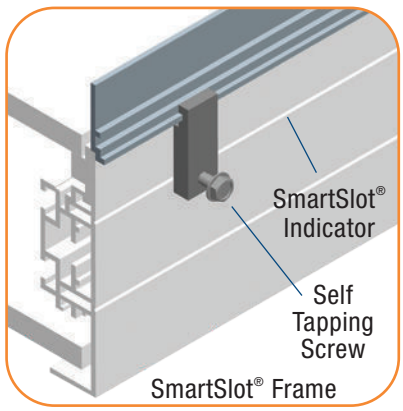

Available in T-Slot or SmartSlot® Frame

Configurations

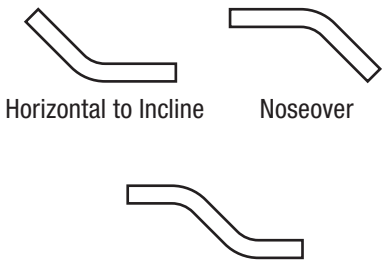

3200 Series Z-Frame Flat Modular Belt Conveyor

32 CT Z M WW - LLL - LLL - LLL AA E 1 0 0 A P BB

- **Belt Type**
- **Profile Type**
- **Drive Shaft Position:** **A or D**
- **Idler Tail Code:** **0** = Standard idler
- **Drive Tail Type:** **0** = Standard 76 mm (3 in), **1** = Dual output shaft
- **Mounting Bracket Options:** **1** = Conveyor to include mounting brackets, **3** = Conveyor not to include mounting brackets
- **Belt Direction:** **E** = Incline, **D** = Decline
- **Angle**
- **L3 Section Length Reference** (in inches)
- **L2 Section Length Reference** (in inches)
- **L1 Section Length Reference** (in inches)
- **Conveyor Width Reference**
- **Documentation Language:** **M** = US, **U** = Europe
- **Frame Type:** **MT** = T Slot Frame, **MS** = Smart Slot Frame

Order gearmotor mounting packages and gearmotors separately, see pages 54-69.
For support stands and accessories, see page 80-85.

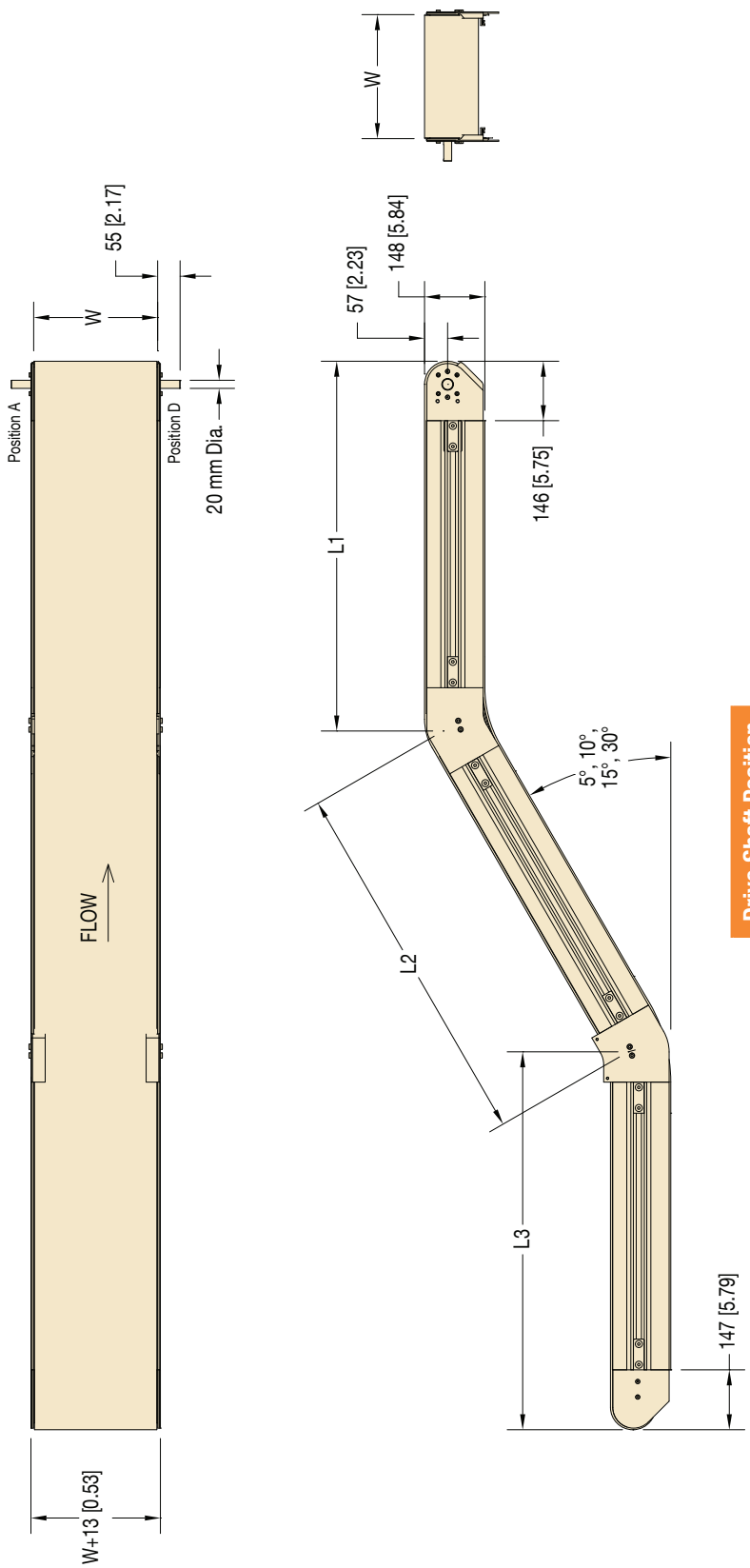

W = Conveyor Belt Width **Dim** = mm (in)

Belt Width Table

Conveyor Width	Belt Width	Outside Frame Width	Cleat Width	Pocket Width
203.2 (08)	199.9 (7.87)	218.2 (8.59)	133.9 (5.27)	142.0 (5.59)
254.0 (10)	249.9 (9.84)	268.2 (10.56)	183.9 (7.24)	192.0 (7.56)
304.8 (12)	300.0 (11.81)	318.3 (12.53)	233.9 (9.21)	242.1 (9.53)
355.6 (14)	350.0 (13.78)	368.0 (14.49)	284.0 (11.18)	291.8 (11.49)
406.4 (16)	400.1 (15.75)	418.1 (16.46)	334.0 (13.15)	341.9 (13.46)
457.2 (18)	450.1 (17.72)	468.1 (18.43)	384.0 (15.12)	391.9 (15.43)
508.0 (20)	500.1 (19.69)	518.2 (20.40)	434.0 (17.09)	442.0 (17.40)
558.8 (22)	549.1(21.65)	568.2 (22.37)	483.9 (19.05)	492.0 (19.37)
609.6 (24)	599.9 (23.62)	618.2 (24.34)	533.9 (21.02)	542.0 (21.34)

Drive Shaft Position

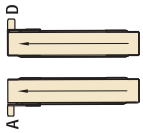

Standard Sizes

Conveyor Width Reference	08	02 increments **up to...**	24
Conveyor Belt Width (W)	203 mm (8 in)	51 mm (2 in) increments **up to...**	610 mm (24 in)
Module Length Reference	024	001 increments **up to...**	288
Module Length (L_1 / L_2 / L_3)	610 mm (24 in)	25 mm (1 in) increments **up to...**	7315 mm (288 in)

NOTE: Conveyor longer than 12' (3,658 mm) will be constructed using a multiple piece frame. Consult factory for locations of these frame joints. Support is recommended at each frame joint.

Shown with T-Slot Frame

Specifications

- Loads up to 227 kg (500 lbs)
- Belt speeds up to 76 m/min (250 ft/min)
- Belt widths: 203 to 610 mm (8 to 24 in)
- Conveyor section lengths: 914 to 25,375 mm (36 to 999 in)
- Standard angles: 5°, 10°, 15°, 30°, 45° and 60°
- One revolution of the drive pulley moves the belt approximately 305 mm (12 in)
- Rigid, 142 mm (5.6 in) high, anodized aluminum frame
- Available in 25 and 76 mm (1 and 3 in) high cleats
- Optional two (2) SmartSlot® mounting locations for ¼-20 or M6-1.0 fasteners
- Completely contained belt eliminates catenary sag and reduces pinch points

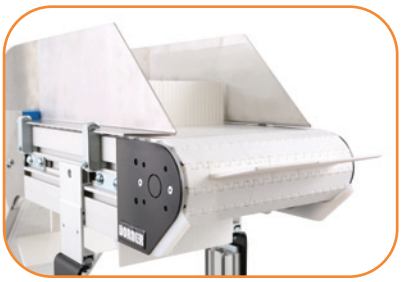

1" and 3" Cleats

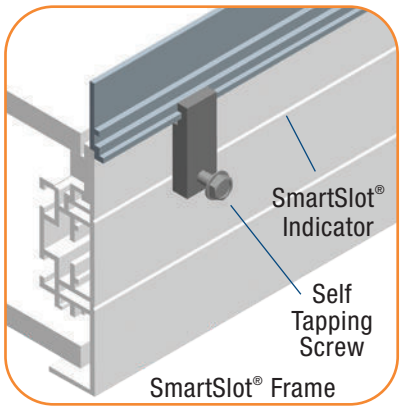

Available in T-Slot or SmartSlot® Frame

Configurations

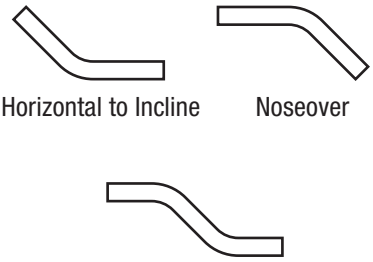

3200 Series Z-Frame Flat Modular Belt Conveyor

32 CT Z M WW - LLL - LLL - LLL AA E 1 0 0 A P BB SS

- **Cleat Spacing** (in inches)
- **Belt Type**
- **Profile Type**
- **Drive Shaft Position:** **A or D**
- **Idler Tail Code:** **0** = Standard idler
- **Drive Tail Type:** **0** = Standard 76 mm (3 in), **1** = Dual output shaft
- **Mounting Bracket Options:** **1** = Conveyor to include mounting brackets, **3** = Conveyor not to include mounting brackets
- **Direction:** **E** = Incline, **D** = Decline
- **Angle**
- **L3 Section Length Reference** (in inches)
- **L2 Section Length Reference** (in inches)
- **L1 Section Length Reference** (in inches)
- **Conveyor Width Reference**
- **Documentation Language:** **M** = US, **U** = Europe
- **Frame Type:** **MT** = T Slot Frame, **MS** = Smart Slot Frame

Order gearmotor mounting packages and gearmotors separately, see pages 54-69.
For support stands and accessories, see page 80-85.

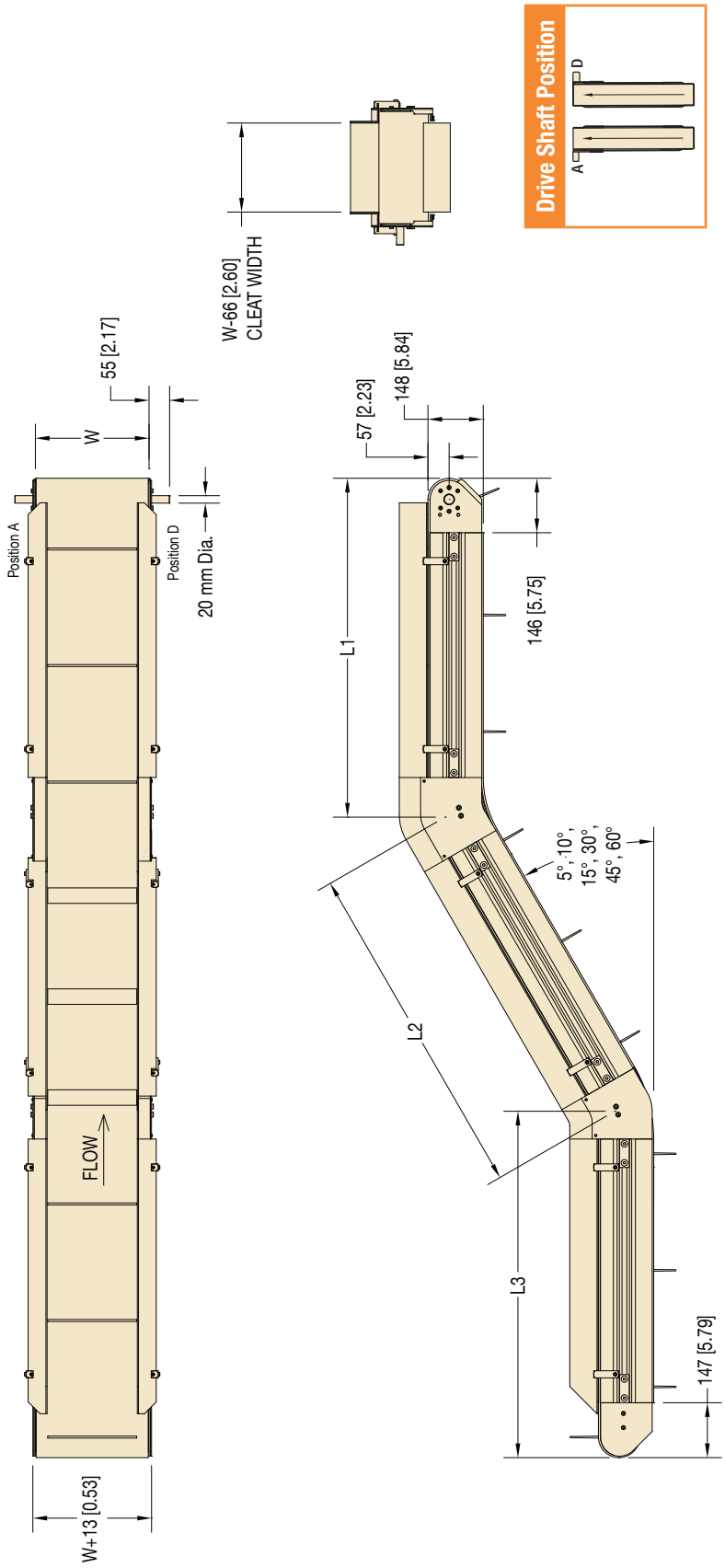

Belt Width Table			
Conveyor Width	Belt Width	Outside Frame Width	Cleat Width
203.2 (08)	199.9 (7.87)	218.2 (8.59)	134.4 (5.29)
254.0 (10)	249.9 (9.84)	268.2 (10.56)	184.2 (7.25)
304.8 (12)	300.0 (11.81)	318.3 (12.53)	234.7 (9.24)
355.6 (14)	350.0 (13.78)	368.0 (14.49)	284.2 (11.19)
406.4 (16)	400.1 (15.75)	418.1 (16.46)	334.3 (13.16)
457.2 (18)	450.1 (17.72)	468.1 (18.43)	384.3 (15.13)
508.0 (20)	500.1 (19.69)	518.2 (20.40)	434.3 (17.10)
558.8 (22)	549.1(21.65)	568.2 (22.37)	484.1 (19.06)
609.6 (24)	599.9 (23.62)	619.0 (24.37)	534.2 (21.03)

W = Conveyor Belt Width **Dim** = mm (in)

Standard Sizes				
Conveyor Width Reference	08	02 increments **up to...**	24
Conveyor Belt Width (W)	203 mm (8 in)	51 mm (2 in) increments **up to...**	610 mm (24 in)
Module Length Reference	024	001 increments **up to...**	999
Module Length (L_1 / L_2 / L_3)	610 mm (24 in)	25 mm (1 in) increments **up to...**	25,375 mm (999 in)

NOTE: Conveyor longer than 12' (3,658 mm) will be constructed using a multiple piece frame. Consult factory for locations of these frame joints. Support is recommended at each frame joint.

Straight, Flat Belt Conveyors

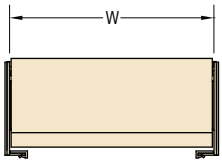

-01
Low Side

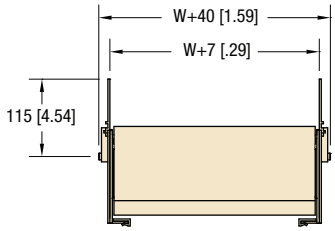

-04
76 mm (3 in) Aluminum High Side

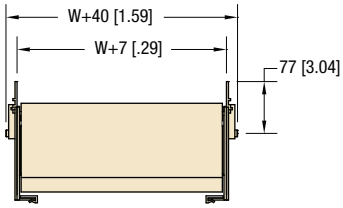

-05
38 mm (1 ½ in) Aluminum High Side

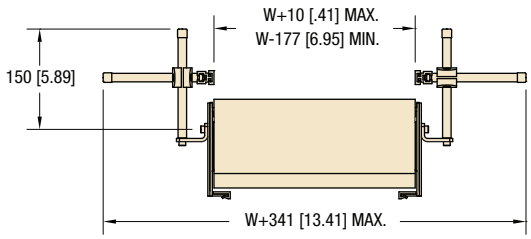

-13
Fully Adjustable

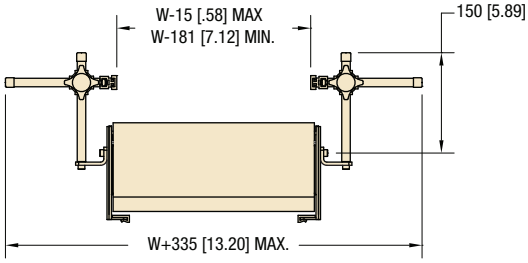

-14
Tool-less Fully Adjustable

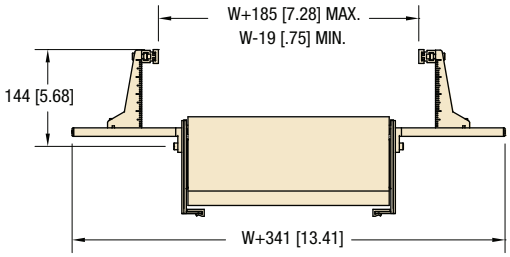

-16
Adjustable Outboard

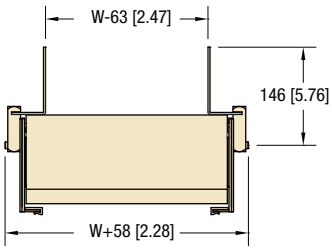

-24
102 mm (4 in) Stainless Steel High Side

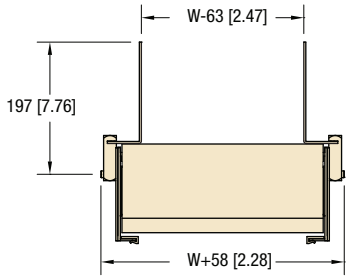

-26
152 mm (6 in) Stainless Steel High Side

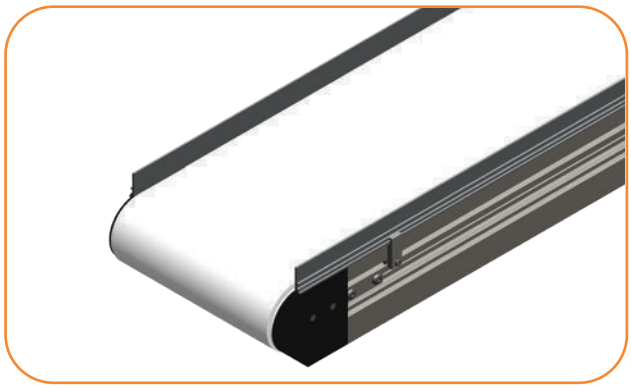

05 Profile

14 Profile

Straight and LPZ – Cleated Belt Conveyors

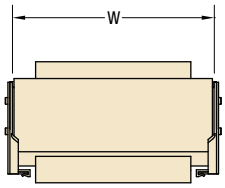

-0
Low Side

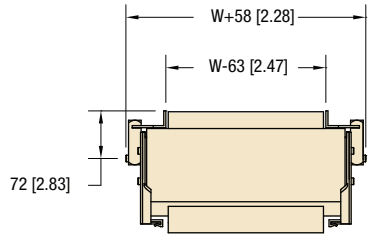

-1
25 mm (1 in) Aluminum High Side

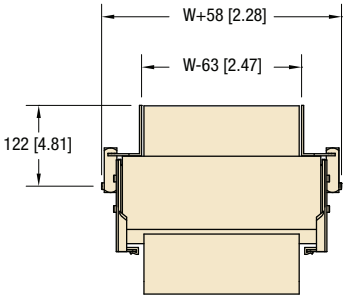

-3
76 mm (3 in) Aluminum High Side

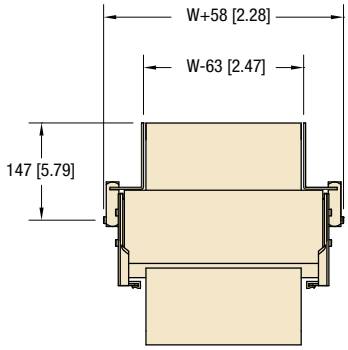

-5
102 mm (4 in) Stainless Steel High Side

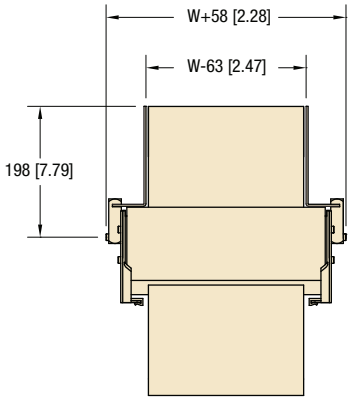

-6
152 mm (6 in) Stainless Steel High Side

Curved Flat Belt Conveyors

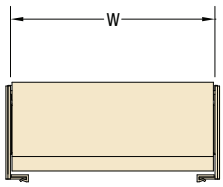

-01
Low Side

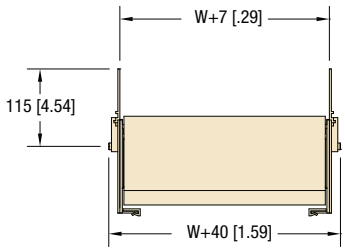

-04
76 mm (3 in) Aluminum High Side

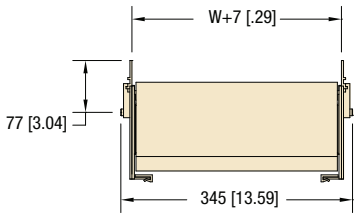

-05
38 mm (1 ½ in) Aluminum High Side

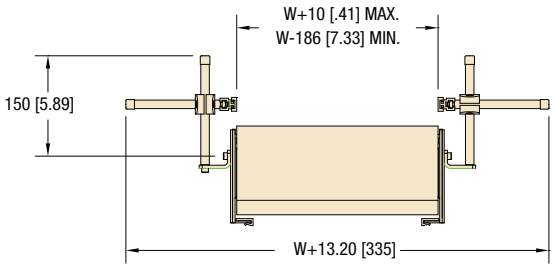

-13
Fully Adjustable

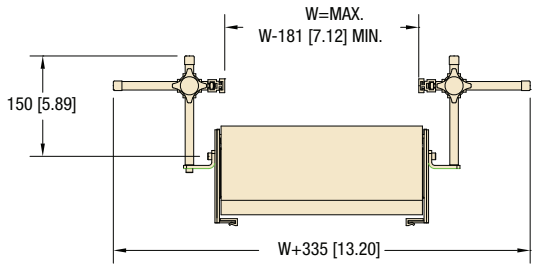

-14
Tool-less Fully Adjustable

Modular Belt Types

Friction Inserts

are available for incline applications. Inserts may be placed along entire length of the belt or spaced on 51, 102, 152 or 305 mm (2, 4, 6 or 12 in) centers. Friction inserts are indented 51 mm (2 in) from each belt edge.

Flat Top Belts

provide a very closed surface for complete product support, easy wiping.

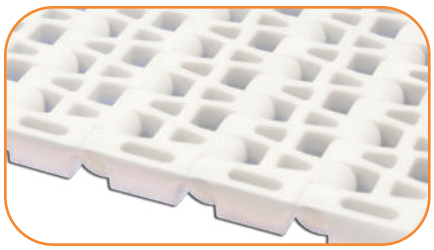

Flush Grid Belts

provide an open surface for better drainage, cleaning or air flow/cooling.

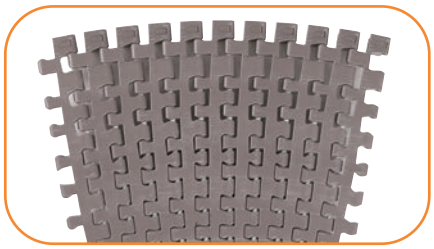

Curve Belts

provide a tight radius, space saving corner. Side tabs ensure positive belt tracking with a flush top design. Reduces number of drives.

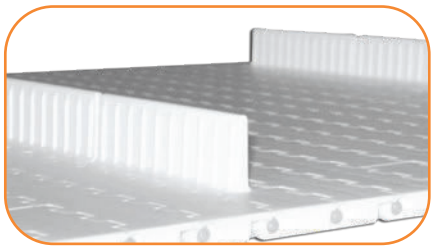

Cleated Belts

provide a sturdy cleat for elevation at steep inclines. Cleats available in 25 and 76 mm (1 and 3 in) heights.

Roller Top

provides low backpressure for accumulation of heavy loads.

Straight Modular Belts

Straight Modular Belts

Belt Type		Part Number Reference	Description	% Open	Pitch	Belt Thickness	Color	Belt Material	Rod Material	Minimum Product Temperature F(C)***	Maximum Product Temperature F(C)***	FDA / CFIA Approved*	Chemical Resistance	Wear Resistance	Maximum Incline / Decline (degrees)**	Nose Bar Idler Diameter
Straight Flat Belts	Standard Drive & Idler Pulley	MN	Flat top	0 25	25 (1)	10 (0.39)	Blue	Acetal	Polypropylene	40 (5)	200 (93)	Y	Good	V-Good	5	N/A
		MP	Flat top	0	25 (1)	10 (0.39)	White	Polypropylene	Polypropylene	40 (5)	220 (105)	Y	V-Good	Good	5	N/A
		MC	Flush Grid	35	25 (1)	10 (0.39)	White	Acetal	Polypropylene	40 (5)	200 (93)	Y	Good	V-Good	5	N/A
		MD	Flush Grid	35	25 (1)	10 (0.39)	White	Polypropylene	Polypropylene	40 (5)	220 (105)	Y	V-Good	Good	5	N/A
	Nose Bar Drive or Nose Bar Idler	MG	Flat top	0	13 (0.5)	10 (0.39)	White	Acetal	Nylon	-40 (-40)	200 (93)	Y	Good	V-Good	5	25 (1)
		MH	Flat top	0	13 (0.5)	10 (0.39)	White	Polypropylene	Nylon	40 (5)	220 (105)	Y	V-Good	Good	5	25 (1)
		MJ	Flush Grid	25	13 (0.5)	10 (0.39)	White	Acetal	Nylon	-40 (-40)	200 (93)	Y	Good	V-Good	5	25 (1)
		MK	Flush Grid	25	13 (0.5)	10 (0.39))	White	Polypropylene	Nylon	40 (5)	220 (105)	Y	V-Good	Good	5	25 (1)
Cleated Straight Belts	Standard Drive & Idler Pulley	NJ	Flat top w/ 25 (1) Cleats	0	25 (1)	10 (0.39)	Blue	Acetal	Polypropylene	40 (5)	200 (93)	Y	Good	V-Good	60˚	N/A
		NK	Flat top w/ 25 (1) Cleats	0	25 (1)	10 (0.39)	White	Polypropylene	Polypropylene	40 (5)	220 (105)	Y	V-Good	Good	60˚	N/A
		NL	Flat top w/ 76 (3) Cleats	0	25 (1)	10 (0.39))	Blue	Acetal	Polypropylene	40 (5)	200 (93)	Y	Good	V-Good	60˚	N/A
		NM	Flat top w/ 76 (3) Cleats	0	25 (1)	10 (0.39)	White	Polypropylene	Polypropylene	40 (5)	220 (105)	Y	V-Good	Good	60˚	N/A
		NE	Flush Grid w/ 25 (1) cleats	35	25 (1)	10 (0.39)	Blue	Acetal	Polypropylene	40 (5)	200 (93)	Y	Good	V-Good	60˚	N/A
		NF	Flush Grid w/ 25 (1) cleats	35	25 (1)	10 (0.39)	White	Polypropylene	Polypropylene	40 (5)	220 (105)	Y	V-Good	Good	60˚	N/A
		NG	Flush Grid w/ 76 (3) cleats	35	25 (1)	10 (0.39)	Blue	Acetal	Polypropylene	40 (5)	200 (93)	Y	Good	V-Good	60˚	N/A
		NH	Flush Grid w/ 76 (3) cleats	35	25 (1)	10 (0.39)	White	Polypropylene	Polypropylene	40 (5)	220 (105)	Y	V-Good	Good	60˚	N/A
Friction Top Straight Belts	Standard Idler Pulley	SEE TABLE BELOW	Flat top w/ friction inserts	0	25 (1)	14 (0.55)	White	Polypropylene	Polypropylene	40 (5)	140 (60)	Y	V-Good	Poor	20	N/A
		SEE TABLE BELOW	Flush Grid w/ friction inserts	35	25 (1)	14 (0.55)	White	Polypropylene	Polypropylene	40 (5)	140 (60)	Y	V-Good	Poor	20	N/A
Roller Top Belts	Standard Drive & Idler Pulley	ML	Roller Top	35	1 (25)	14 (0.55)	White	Acetal	Nylon	-40 (-40)	200 (93)	Y	Good	V-Good	N/A	N/A

Dim = mm (in)

* FDA = Food and Drug Administration, CFIA = Canadian Food Inspection Agency
** Temperature, environmental conditions, product materials and product configuration effect the maximum incline or decline. Product testing is recommended.
*** These do not indicate ambient running conditions. Ambient temperature range is 30 to 100 F (-1 to 38 C).
Product temperature is dependent on length of time product is in direct contact with belt surface. Product testing is recommended.

Friction Top Straight Plastic Chain: Part Number Reference Chart

Flat Top w/ Friction Inserts Part Number Reference	TA	TB	TC	TD	TE
Flush Grid w/ Friction Inserts Part Number Reference	N/A	TF	TG	TH	TJ
Friction Insert Spacing [links]	1	2	4	6	12
Friction Insert Spacing	25 mm (1 in)	51 mm (2 in)	102 mm (4 in)	152 mm (6 in)	305 mm (12 in)

Note: Friction Top not available on nose bar drives

Basic Single Curve Modular Belts

Basic Single Curve Modular Belts

Belt Type	Part Number Refreence	Decription	% Open	Pitch	Turn Radius Factor	Belt Thickness	Color	Belt Material	Rod Material	Minimum Product Temperature F(C)***	Maximum Product Temperature F(C)***	FDA Approved Materials*	Chemical Resistance	Wear Resistance	Maximum incline / decline (deg)**	Friction Insert Spacing
Curve Flat Belt	VA	Flush Grid Curve	35%	25 (1.0)	2.2	11 (0.4)	White	Acetal	Nylon	-40 (-40)	200 (93)	Yes	Good	V-Good	5	n/a
Curve Roller Top	VB	Flush Grid Curve	35%	25 (1.0)	2.2	15 (0.59)	White / blue roller	Acetal	Nylon	-40 (-40)	200 (93)	Yes	Good	V-Good	0	n/a
Curve Friction Insert	VC	Flush Grid Curve	20%	25 (1.0)	2.2	16 (0.62)	Grey / black insert	Polypropylene/TPE	Nylon	40 (5)	140 (60)	Yes	Good	Poor	20	1
Curve Friction Insert	VD	Flush Grid Curve	20%	25 (1.0)	2.2	16 (0.62)	Grey / black insert	Polypropylene/TPE	Nylon	40 (5)	140(60)	Yes	Good	Poor	20	2
Curve Friction Insert	VE	Flush Grid Curve	20%	25 (1.0)	2.2	16 (0.62)	Grey / black insert	Polypropylene/TPE	Nylon	40 (5)	140 (60)	Yes	Good	Poor	20	4
Curve Friction Insert	VF	Flush Grid Curve	20%	25 (1.0)	2.2	16 (0.62)	Grey / black insert	Polypropylene/TPE	Nylon	40 (5)	140 (60)	Yes	Good	Poor	20	6
Curve Friction Insert	VG	Flush Grid Curve	20%	25 (1.0)	2.2	16 (0.62)	Grey / black insert	Polypropylene/TPE	Nylon	40 (5)	140 (60)	Yes	Good	Poor	20	12

Dim = mm (in)

* FDA = Food and Drug Administration, CFIA = Canadian Food Inspection Agency
** Temperature, environmental conditions, product materials and product configuration effect the maximum incline or decline. Product testing is recommended.
*** These do not indicate ambient running conditions. Ambient temperature range is 30 to 100 F (-1 to 38 C).
Product temperature is dependent on length of time product is in direct contact with belt surface. Product testing is recommended.

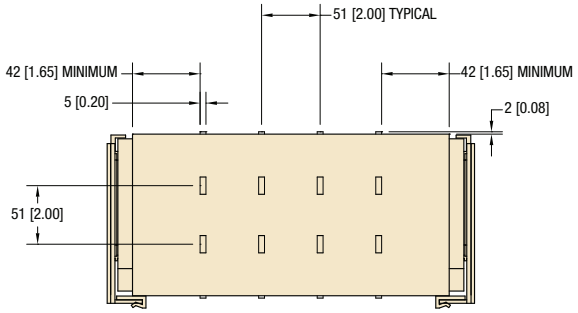

Roller Top

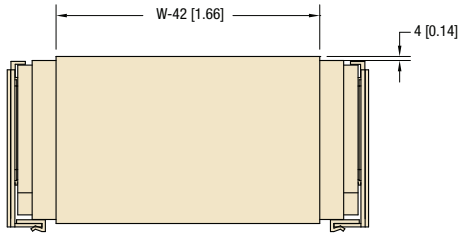

Friction Top

High Strength Curve Modular Belts

High Strength Curve Modular Belts

Belt Type	Part Number Refreence	Decription	% Open	Pitch	Turn Radius Factor	Belt Thickness	Color	Belt Material	Rod Material****	Minimum Product Temperature F(C)***	Maximum Product Temperature F(C)***	FDA Approved Materials*	Chemical Resistance	Wear Resistance	Maximum incline / decline (deg)**	Friction Insert Spacing
Curve Flat Belt,Tab both sides	VH	Flush Grid Curve	16%	1.25 (31.8)	2	0.5 (12.7)	Tan	Acetal	Polyester	-40 (-40)	180 (82)	Yes	Good	V-Good	5	n/a
Curve Flat Belt,Bearing A side	VJ	Flush Grid Curve	16%	1.25 (31.8)	2	0.5 (12.7)	Tan	Acetal/Carbon Steel Bearing.	Polyester	-40 (-40)	180 (82)	Yes	Good	V-Good	5	n/a
Curve Flat Belt,Bearing D side	VK	Flush Grid Curve	16%	1.25 (31.8)	2	0.5 (12.7)	Tan	Acetal/Carbon Steel Bearing.	Polyester	-40 (-40)	180 (82)	Yes	Good	V-Good	5	n/a
Curve Flat Belt,Bearing both sides	VL	Flush Grid Curve	16%	1.25 (31.8)	2	0.5 (12.7)	Tan	Acetal/Carbon Steel Bearing.	Polyester	-40 (-40)	180 (82)	Yes	Good	V-Good	5	n/a

Dim = mm (in)

* FDA = Food and Drug Administration, CFIA = Canadian Food Inspection Agency
** Temperature, environmental conditions, product materials and product configuration effect the maximum incline or decline. Product testing is recommended.
*** These do not indicate ambient running conditions. Ambient temperature range is 30 to 100 F (-1 to 38 C).
Product temperature is dependent on length of time product is in direct contact with belt surface. Product testing is recommended.
****Stainless steel pins are standard on 6" wide

Side Mount Package, Parallel Shaft Gearmotor

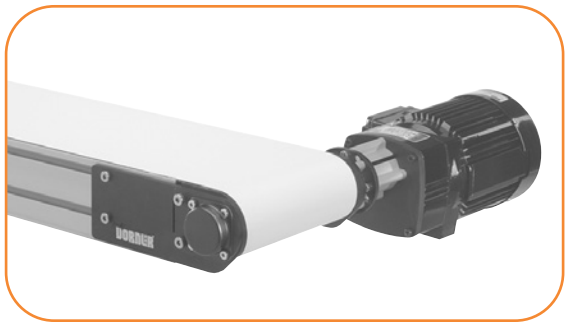

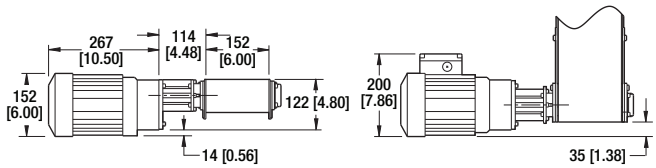

W = Conveyor Belt Width

- Includes gearmotor mounting bracket, 3 jaw flexible coupling, coupling guard and mounting hardware

Bottom Mount Package, Parallel Shaft Gearmotor

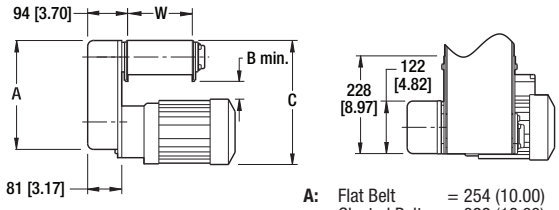

A:	Flat Belt	= 254 (10.00)
	Cleated Belt	= 322 (12.69)
B:	Flat Belt	= 42 (1.64)
	Cleated Belt	= 110 (4.33)
C:	Flat Belt	= 289 (11.39)
	Cleated Belt	= 357 (14.08)

W = Conveyor Belt Width

- Includes gearmotor mounting bracket, timing belt, pulleys, guard and mounting hardware
- Conveyor belt speed can be adjusted with optional ratio pulley kits

Top Mount Package, Parallel Shaft Gearmotor

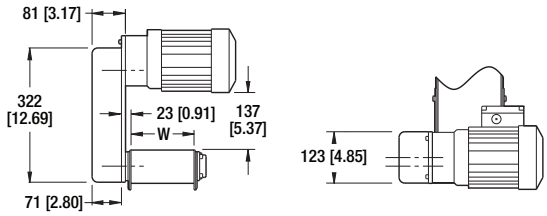

W = Conveyor Belt Width

- Includes gearmotor mounting bracket, timing belt, pulleys, guard and mounting hardware
- Conveyor belt speed can be adjusted with optional ratio pulley kits

Note: Conveyor and gearmotor are not included in the mounting package and must be ordered separately. Dimensions = mm (in)

For ordering information, see page 56

Side Mount Package, 90° Gearmotor

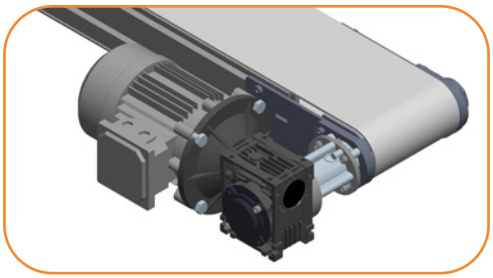

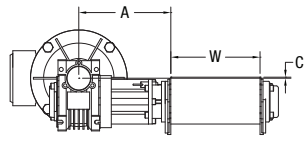

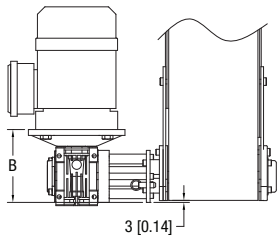

A: = 5.26 (134)
B: = 4.39 (111)
C: = 0.46 (12)

W = Conveyor Belt Width

- Includes gearmotor mounting bracket, 3-jaw flexible coupling, coupling guard and mounting hardware

Bottom Mount Package, 90° Gearmotor

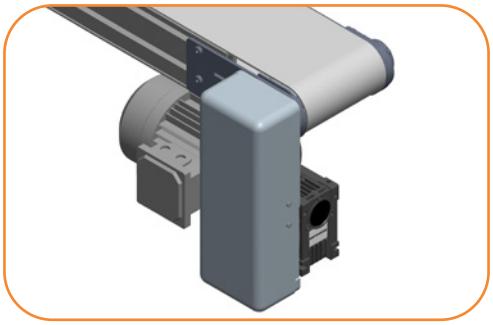

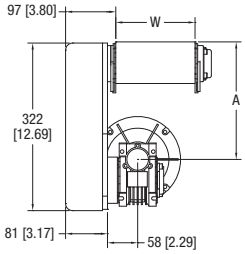

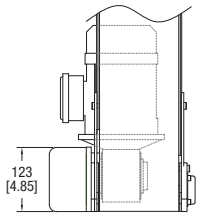

A: Flat Belt = 226 (8.90)
Cleated Belt = 266 (10.47)

W = Conveyor Belt Width

- Includes gearmotor mounting bracket, timing belt, pulleys, guard and mounting hardware
- Conveyor belt speed can be adjusted with optional ratio pulley kits

Top Mount Package, 90° Gearmotor

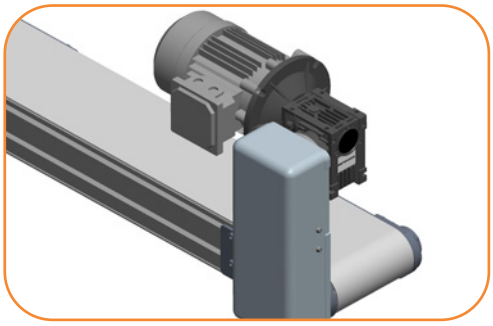

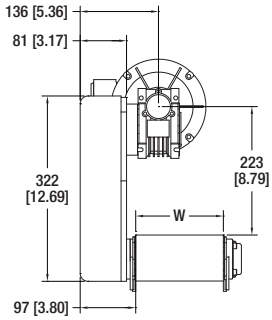

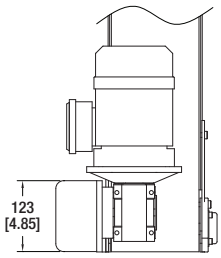

W = Conveyor Belt Width

- Includes gearmotor mounting bracket, timing belt, pulleys, guard and mounting hardware
- Conveyor belt speed can be adjusted with optional ratio pulley kits

90° Gearmotor Location Options

Side Mount

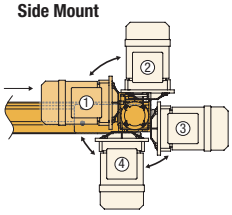

Bottom Mount

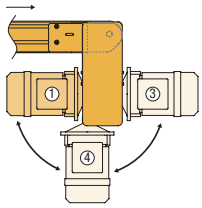

Top Mount

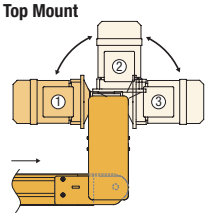

Note: Conveyor and gearmotor are not included in the mounting package and must be ordered separately. Dimensions = mm (in)

For ordering information, see page 56

End Drive Belt Speed

Fixed Speed

3200 Series		3200 Prec Move		RPM From Gearmotor	Mount Package		Pulley Kit		Gearmotor Chart	
m/min	Ft/min	m/min	Ft/min		Top & Bottom	Side	Drive Pulley	Driven Pulley	Light Load	Standard Load
2.4	8	2.7	9	10	x	x	16	16		7
3.4	11	3.7	12	10	x		24	16		7
7.0	23	7.6	25	29	x	x	16	16	1	6, 7
10.4	34	11.3	37	43	x	x	16	16	1	6
11.3	37	12.2	40	47	x	x	16	16		21
14.0	46	15.3	50	58	x	x	16	16		7
15.9	52	17.4	57	43	x		24	16	1	6
21.0	69	22.9	75	86	x	x	16	16	1	6, 7
31.4	103	34.2	112	86	x		24	16	1	6, 7
33.0	107	36	117	134	x	x	16	16		21
41.8	137	45.8	150	173	x	x	16	16	1	6, 7
52.5	172	57.3	188	173	x		20	16	1	6, 7
62.8	206	68.6	225	173	x		24	16	1	6, 7
64.0	210	70	229	264	x	x	16	16		21
83.9	275	91.5	300	345	x	x	16	16		6, 7
104.6	343	114.4	375	345	x		20	16		6, 7
125.7	412	137.3	450	345	x		24	16		6, 7
CE Gearmotor RPM at 50 Hz.										
5.8	19	6.4	21	23*	x	x	16	16	2	8
8.5	28	9.5	31	35*	x	x	16	16	2	8
12.8	42	14.0	46	35*	x		24	16	2	8
17.1	56	18.6	61	70*	x	x	16	16	2	8
25.6	84	28.1	92	70*	x		24	16	2	8
33.9	111	36.9	121	140*	x	x	16	16	2	8
42.4	139	46.4	152	140*	x		20	16	2	8
50.9	167	55.5	182	140*	x		24	16	2	8
68.0	223	74.4	244	280*	x	x	16	16	2	8
85.1	279	93.0	305	280*	x		20	16	2	8
101.9	334	111.3	365	280*	x		24	16	2	8
116.5	382	127.2	417	280*	x		24	16	2	8

Note: Cleated Belts operate at maximum 280 ft/min (86 m/min)
Red = Parallel Shaft, Blue = 90˚

Other speeds available. See www.dorner.com and run the DTools program for a full list of belt speeds.

Variable Speed

3200 Series		3200 Prec Move		RPM From Gearmotor	Mount Package		Pulley Kit		Gearmotor Chart	
m/min	Ft/min	m/min	Ft/min		Top & Bottom	Side	Drive Pulley	Driven Pulley	Light Load	Standard Load
0.4 - 3.4	1.3 - 11	0.4 - 3.7	1.4 - 12	14	x	x	16	16		12
0.6 - 5.2	2 - 17	0.7 - 5.7	2.2 - 18.6	14	x		24	16		12
0.7 - 7	2.3 - 23	0.8 - 7.7	2.5 - 25.1	29	x	x	16	16	4	10, 13, 14
1 - 10.4	3.4 - 34	1.1 - 11.3	3.7 - 37.1	43	x	x	16	16	4	10, 14
1.2 - 10.1	4 - 33	1.3 - 11	4.4 - 36	42	x	x	16	16	3	9, 12
1 - 11	4 - 37	1 - 12	4 - 40	47	x	x	16	16		22
1.5 - 15.6	5 - 51	1.7 - 17	5.5 - 55.7	43	x		24	16	4	10, 14
1.8 - 15.3	6 - 50	2 - 16.7	6.6 - 54.6	63	x	x	16	16	3	9
2.1 - 20.7	7 - 68	2.3 - 22.6	7.6 - 74.3	86	x	x	16	16	4	10, 13, 14
2.4 - 20.1	8 - 66	2.7 - 22	8.7 - 72.1	83	x	x	16	16		12
3 - 23	9 - 75	3 - 25	10 - 82	63	x		24	16	3	9
3 - 31	10 - 103	3 - 34	11 - 112	86	x		24	16	4	10, 13, 14
3 - 33	11 - 107	4 - 36	12 - 117	134	x	x	16	16		22
4 - 31	12 - 100	4 - 33	13 - 109	125	x	x	16	16	3	9, 12
4 - 42	14 - 137	5 - 46	15 - 150	173	x	x	16	16	4	10, 13, 14
5 - 46	18 - 150	6 - 50	20 - 164	125	x		24	16	3	9, 12
6 - 63	21 - 206	7 - 69	23 - 225	173	x		24	16	4	10, 13, 14
6 - 64	21 - 210	7 - 70	23 - 229	264	x	x	16	16		22
7 - 61	24 - 200	8 - 67	26 - 218	250	x	x	16	16	3	9, 12
8 - 84	27 - 275	9 - 92	29 - 300	345	x	x	16	16	4	10, 13, 14
9 - 76	30 - 250	10 - 83	33 - 273	250	x		20	16	3	9, 12
10 - 105	34 - 343	11 - 114	37 - 375	345	x		20	16	4	10, 13, 14
11 - 92	36 - 300	12 - 100	39 - 328	250	x		24	16	3	9, 12
13 - 126	41 - 412	14 - 137	45 - 450	345	x		24	16	4	10, 13, 14
15 - 121	48 - 398	16 - 133	52 - 435	500	x	x	16	16		9
CE RPM from 50 Hz. gearmotors. VFD drive at 63 max. Hz. output.										
2.8 - 7	9.3 - 23	3.1 - 7.7	10 - 25	23*	x	x	16	16	5	11
4.2 - 10.7	13.9 - 35	4.6 - 11.7	15 - 38	35*	x	x	16	16	5	11
6.1 - 16.2	20 - 53	6.7 - 17.7	22 - 58	35*	x		24	16	5	11
8.5 - 21.4	28 - 70	9.3 - 23.3	31 - 76	70*	x	x	16	16	5	11
12.8 - 32	42 - 105	14 - 35	46 - 115	70*	x		24	16	5	11
17 - 43	55 - 140	18 - 47	60 - 153	140*	x	x	16	16	5	11
21 - 54	69 - 176	23 - 59	75 - 192	140*	x		20	16	5	11
26 - 64	84 - 210	28 - 70	92 - 229	140*	x		24	16	5	11
34 - 85	111 - 280	37 - 93	121 - 306	280*	x	x	16	16		11
42 - 107	139 - 351	46 - 117	152 - 383	280*	x		20	16		11
51 - 128	167 - 421	56 - 140	182 - 460	280*	x		24	16		11

3200 Series: End Drive Mounting Packages

3 2 M B P S A - 1 6 1 6

- **Drive / Driven Pulley Combination** (Top and Bottom Mounts Only)
- **Belt Style: "-"** = Flat Belt
  or add Cleat Tyle: **A, B, C, F, G, H, J, V, S, T, U, W, X, Y**
- **Gearmotor Mounting Position: A, B, C, D**
- **Gearmotor Type: L, V, S, H, K**
- **Gearmotor Output Shaft: P** = Parallel Shaft, **E** = eDrive™, **W** = 90º SEW
- **Mount Style: S** = Side Mount, **B** = Bottom Mount, **T** = Top Mount
- **Documentation Language: M** = US, **U** = Europe
- **Conveyor Series: 32** = 3200 or Z-Frame End Drive

Example: 32MBPSA-1616
Description: Bottom mount package with English documentation. Configured for a parallel shaft, standard load motor in the A mount position with a 16:16 drive / driven pullt combination.

Drive Shaft Position

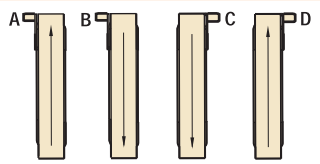

Since belts are being pulled, positions A & D are preferred. Pushing belts (B & C) reduce conveyor load capacity by approximately 66%.

Refer to the Gearmotor Selection Steps on page 60 for instructions on using Belt Speed Charts.

Center Drive Belt Speed

Fixed Speed			
Belt Speed		RPM From Gearmotor	Gearmotor Chart #
m/min	Ft/min		
6.4	21	13	**22**
8.4	28	17	**15**
10.5	35	22	**15**
14.0	46	29	**15**
16.8	55	35	**15**
18.0	61	38	**22**
21.0	69	43	**15**
28.0	92	58	**15**
33.7	110	70	**15**
42.1	138	86	**15**
52.0	170	106	**22**
56.1	184	115	**15**
84.1	276	173	**15**
98.0	321	201	**22**
112.2	368	230	**15**
CE Gearmotor RPM at 50 Hz.			
6.8	22	14*	**16**
15.2	50	31*	**16**
22.8	75	47*	**16**
45.5	149	93*	**16**
97.6	320	200*	**16**

Variable Speed			
Belt Speed		RPM From Gearmotor	Gearmotor Chart #
m/min	Ft/min		
0.8 - 8.4	2.8 - 28	17	**18, 19**
1 - 6.4	3.5 - 21	13	**23**
1.1 - 10.5	3.5 - 35	22	**18**
1.2 - 12.2	4 - 40	25	**17**
1.4 - 14.0	4.6 - 46	29	**18, 19**
1.5 - 15.2	5 - 50	31	**17**
1.7 - 16.8	5.5 - 55.2	35	**18**
2.0 - 20.3	6.7 - 66.7	42	**17**
2.1 - 21.0	6.9 - 69	43	**18, 19**
2.8 - 28.0	9.2 - 92	58	**18**
3 - 18	10 - 61	38	**23**
3.4 - 33.7	11 - 110.4	70	**18, 19**
4.2 - 42.1	13.8 - 138	86	**18, 19**
5.6 - 56.0	18.4 - 184	115	**18, 19**
8.4 - 84.1	27.6 - 276	173	**18**
9 - 52	28 - 170	106	**23**
16 - 98	53 - 321	201	**23**
11.2 - 112.2	36.8 - 368	230	**18**
CE RPM from 50 Hz. gearmotors, VFD drive at 63 max. Hz. output.			
0.7-6.8	2.2-22.4	14*	**19**

Other speeds available.
Go to http://tools.dornerconveyors.com/ to configure a conveyor for a full list of belt speeds.

Light & Standard Load

Fixed Speed

Belt Speed: Straight and Basic Curve m/min	Belt Speed: Straight and Basic Curve Ft/min	Belt Speed: High Performance Curve m/min	Belt Speed: High Performance Curve Ft/min	RPM From Gearmotor	Mount Package: Top & Bottom	Mount Package: Side	Pulley Kit: Drive Pulley	Pulley Kit: Driven Pulley	Gearmotor Chart: Light Load	Gearmotor Chart: Standard Load
3.0	10	3.8	12	10	x	x	14	14		7
4.6	15	5.7	19	10	x		24	16		7
8.8	29	11.0	36	29	x	x	14	14	1	6, 7
13.1	43	16.3	53	43	x	x	14	14	1	6
14.3	47	17.8	58	47	x	x	14	14		20
17.7	58	21.9	72	58	x	x	14	14		7
19.8	65	24.6	81	43	x		24	16	1	6
26.2	86	32.5	107	86	x	x	14	14	1	6, 7
29.6	97	36.7	120	86	x		18	16	1	6, 7
39.3	129	48.8	160	86	x		24	16	1	6, 7
40.7	134	50.6	166	134	x	x	14	14		20
44.8	147	55.6	182	86	x		24	14	1	6, 7
52.7	173	65.4	215	173	x	x	14	14	1	6, 7
59.4	195	73.7	242	173	x		18	16		6, 7
65.8	216	81.6	268	173	x		20	16		6, 7
75.0	247	93.4	306	173	x		20	14		6, 7
80.0	264	99.8	327	264	x	x	14	14		20
CE Gearmotor RPM at 50 Hz.										
7.0	23	8.7	29	23*	x	x	16	16	2	8
10.7	35	13.2	43	35*	x	x	16	16	2	8
16.2	53	20.0	66	35*	x		24	16	2	8
21.3	70	26.5	87	70*	x	x	16	16	2	8
32.0	105	39.7	130	70*	x		24	16	2	8
42.7	140	52.9	174	140*	x	x	16	16	2	8
53.3	175	66.1	217	140*	x		20	16	2	8
64.0	210	79.4	260	140*	x		24	16	2	8

Variable Speed

Belt Speed: Straight and Basic Curve m/min	Belt Speed: Straight and Basic Curve Ft/min	Belt Speed: High Performance Curve m/min	Belt Speed: High Performance Curve Ft/min	RPM From Gearmotor	Mount Package: Top & Bottom	Mount Package: Side	Pulley Kit: Drive Pulley	Pulley Kit: Driven Pulley	Gearmotor Chart: Light Load	Gearmotor Chart: Standard Load
0.5-4	1.7-14	0.6-5	2-17	14	x	x	14	14		12
0.8-6	2.6-21	1-8	3-26	14	x		24	16		12
0.9-9	2.9-29	1.1-11	4-36	29	x	x	14	14	4	10, 13
1.3-13	4.3-43	1.6-16	5-53	43	x	x	14	14	4	10
1.6-13	5.1-42	1.9-16	6-52	42	x	x	14	14	3	9, 12
2-20	6.6-66	2.5-25	8-82	43	x		24	16	4	10
2.3-19	7.7-63	2.9-24	10-78	63	x	x	14	14	3	9
2.4-14	7.8-47	2.9-18	10-58	47	x	x	14	14		21
2.6-26	8.6-86	3.3-33	11-107	86	x	x	14	14	4	10, 13
3-25	10-83	3.8-31	12-103	83	x	x	14	14		12
3.4-29	11-96	4.2-36	14-119	63	x		24	16	3	9
4-39	13-129	4.9-49	16-160	86	x		24	16	4	10, 13
4.9-38	16-125	6-47	20-155	125	x	x	14	14	3	9, 12
5.5-53	18-173	6.8-65	22-215	173	x	x	14	14	4	10, 13
6.7-41	22-134	8.3-51	27-166	134	x	x	14	14		21
7-57	23-188	8.7-71	29-233	125	x		24	16	3	9, 12
7.6-75	25-247	9.4-93	31-306	173	x		20	14	4	10, 13
CE RPM from 50 Hz. gearmotors. VFD drive at 63 max. Hz. output.										
3.7-9	12-30	4.5-11	15-37	23*	x	x	16	16	5	11
5.5-13	18-44	6.8-17	22-55	35*	x	x	16	16	5	11
8.2-20	27-67	10.2-25	33-83	35*	x		24	16	5	11
11-27	36-88	13.6-33	45-109	70*	x	x	16	16	5	11
16.5-41	54-135	20.4-51	67-167	70*	x		24	16	5	11
21.6-54	71- 176	26.8-67	88-218	140*	x	x	16	16	5	11
27.1-67	89-221	33.6-84	110-274	140*	x		20	16	5	11
29.6-74	97-243	36.7-92	120-301	140*	x		22	16	5	11

Red = Parallel Shaft, Blue = 90˚

Other speeds available. Go to http://tools.dornerconveyors.com/ to configure a conveyor for a full list of belt speeds.

3200 Series: Modular Mounting Packages Standard Load

32 M B P S A - 1616

- **Drive / Driven Pulley Combination** (Top and Bottom Mounts Only)
- **Belt Style: "-"** = Flat Belt, **"C"** = Cleated Belt
- **Gearmotor Mounting Position: A** or **D**
- **Gearmotor Type: L, V, S, H** or **K**
- **Gearmotor Output Shaft: P** = Parallel Shaft, **E** = eDrive™, **W** = Sew 90º
- **Mount Style: S** = Side Mount, **B** = Bottom Mount, **T** = Top Mount
- **Documentation Language: M** = US, **U** = Europe
- **Conveyor Series: 32** = 3200

Example: 32MBPSA-1414
Description: Bottom mount package with English documentation. Configured for a parallel shaft, standard load motor in the A mount position with a 14:14 drive / driven pullt combination.

Heavy Load

Fixed Speed

Belt Speed				RPM From Gearmotor	Mount Package	Gearmotor Chart
Straight and Basic Curve		High Performance Curve				
m/min	Ft/min	m/min	Ft/min		Side	Light Load
5.2	17	6.4	21	17	x	15
6.7	22	8.3	27	22	x	15
8.8	29	11.0	36	29	x	15
10.7	35	13.2	43	35	x	15
13.1	43	16.3	53	43	x	15
17.7	58	21.9	72	58	x	15
21.4	70	26.5	87	70	x	15
26.2	86	32.5	107	86	x	15
35.1	115	43.5	143	115	x	15
52.8	173	65.4	215	173	x	15
70.2	230	86.9	285	230	x	15
CE Gearmotor RPM at 50 Hz.						
4.3	14	5.3	17	14	x	16
5.5	18	6.8	22	18	x	16
8.5	28	10.6	35	28	x	16
10.7	35	13.2	43	35	x	16
14.3	47	17.8	58	47	x	16
21.4	70	26.5	87	70	x	16
28.4	93	35.1	115	93	x	16
42.7	140	52.9	174	140	x	16
57.0	187	70.7	232	187	x	16

Variable Speed

Belt Speed				RPM From Gearmotor	Mount Package	Gearmotor Chart
Straight and Basic Curve		High Performance Curve				
m/min	Ft/min	m/min	Ft/min		Side	Light Load
1.3-5	4.3-17	1.6-6	5-21	17	x	18
1.7-7	5.5-22	2.1-8	7-27	22	x	18
2.2-9	7.3-29	2.8-11	9-36	29	x	18
2.7-11	8.8-35	3.3-13	11-43	35	x	18
3.3-13	10.8-43	4.1-16	13-53	43	x	18
4.4-18	14.5-58	5.5-22	18-72	58	x	18
6.6-26	21.5-86	8.1-33	27-107	86	x	18
5.4-32	17.7-106	6.7-40	22-131	106	x	23
8.8-35	28.8-115	10.9-43	36-143	115	x	18
13.2-53	43.3-173	16.4-65	54-215	173	x	18
17.5-70	57.5-230	21.7-87	71-285	230	x	18
CE Gearmotor RPM at 50 Hz.						
2.1-5	7-18	2.6-7	9-22	14	x	19
2.7-7	9-23	3.4-9	11-29	18	x	19
4.3-11	14-35	5.3-13	17-43	28	x	19
5.3-13	17.5-44	6.6-17	22-55	35	x	19
7.2-18	23.5-59	8.9-22	29-73	47	x	19
10.7-27	35-88	13.2-33	43-109	70	x	19
14.2-36	46.5-117	17.6-44	58-145	93	x	19
21.4-54	70-176	26.5-67	87-218	140	x	19
28.5-72	93.5-236	35.3-89	116-293	187	x	19

Red = Parallel Shaft, Blue = 90˚

Other speeds available. Go to http://tools.dornerconveyors.com/ to configure a conveyor for a full list of belt speeds.

3200 Series: Modular Mounting Packages Heavy Load Side Drives

3 2 H T M S E H A

- **Gearmotor Mounting Position: A or D**
- **Gearmotor Type: H**= Heavy
- **Gearmotor Output Shaft: E** = eDrive™
- **Mount Style: S** = Side Mount
- **Documentation Language: M** = US, **U** = Europe
- **Frame Type: T** = T-Slot, **D** = DustPruf
- **Belt Strength: H** = Straight and Basic Curve, **R** = High Performance Curve
- **Conveyor Series: 32** = 3200

Example: 32HTMSEHA
Description: Side mount package with English documentation. 3200 Series heavy load side motor mounting package for an end drive conveyor, mounted in the A position.

Drive Shaft Position

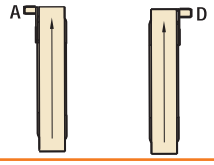

Light Load, Fixed Speed

Chart 1 90° eDrive NEMA C-Face (For use on side mount packages only)

- Sealed gearmotor
- NEMA 42 CZ C Face
- Totally enclosed, fan cooled
- 115V 1 phase includes switch, cord and overload protection
- 208-230/460 Volts, 3 phase wiring by others
- 60 Hz
- Order 3 phase starter separately, see page 72

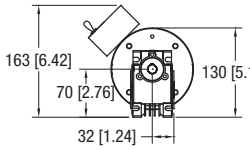

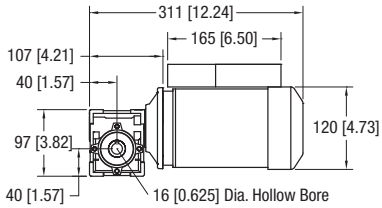

Regulatory Approvals

RoHS

Part Number	RPM	Gearmotor Type	1 Phase			3 Phase			in.-lbs.	Nm	3 Phase Starter Chart
			Hp	kW	FLA	Hp	kW	FLA			
62M060ES4(vp)FN	29	L	0.25	0.19	3.1	0.38	0.28	1.9 / 0.95	134 / 134	15.1 / 15.1	L
62M040ES4(vp)FN	43	L	0.25	0.19	3.1	0.38	0.28	1.9 / 0.95	160 / 160	18.1 / 18.1	L
62M020ES4(vp)FN	86	L	0.25	0.19	3.1	0.38	0.28	1.9 / 0.95	133 / 151	15 / 17.1	L
62M010ES4(vp)FN	173	L	0.25	0.19	3.1	0.38	0.28	1.9 / 0.95	75 / 114	8.5 / 12.9	L

(vp) = Voltage and Phase 11 = 115V, 1 phase 23 = 208 - 230 / 460V, 3 phase

Chart 2 90° eDrive IEC C-Face (For use on side mount packages only)

- Sealed gearmotor
- Totally enclosed, fan cooled
- IEC 63 B5 C Face
- IP 55 protection rating
- 50 Hz
- Order starter separately, see page 72

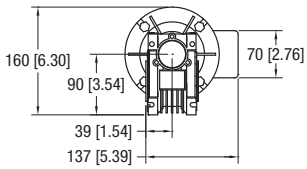

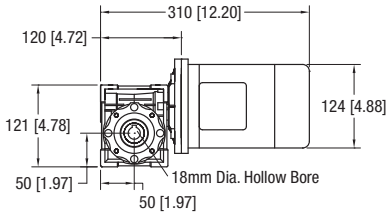

Regulatory Approvals

Part Number	RPM	Gearmotor Type	1Ph kW	1 Ph FLA	3Ph kW	3 Ph FLA	Nm	Starter Chart
62Z060ES4(vp)FN	23	L	0.18	1.6	0.25	1.56 / 0.90	36 / 36	I
62Z040ES4(vp)FN	35	L	0.18	1.6	0.25	1.56 / 0.90	26.9 / 35.5	I
62Z020ES4(vp)FN	70	L	0.18	1.6	0.25	1.56 / 0.90	16 / 21.2	I
62Z010ES4(vp)FN	140	L	0.18	1.6	0.25	1.56 / 0.90	8.7 / 11.4	I

(vp) = Voltage and Phase
21 = 230V, 1 phase
23 = 230V, 3 phase
43 = 400V, 3 phase

CE **Note:** When buying a gearmotor only without the starter, the customer must supply their own on/off switch and motor overload protection to comply with the CE Safety Directive.

FLA = Full Load Amperes

Some motors and gear reducers may normally operate hot to the touch. Consult factory for specific operating temperatures. Note: Dimensions = mm (in)

Light Load, Variable Speed

Chart 3 90° NEMA C-Face (For use on side mount packages only)

- 130 Volts DC
- NEMA 42 CZ C Face
- Totally enclosed, fan cooled
- 300 - 2500 RPM motor
- Order controller separately, see page 70

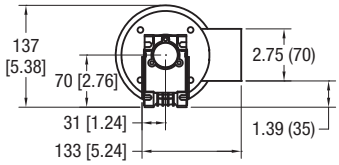

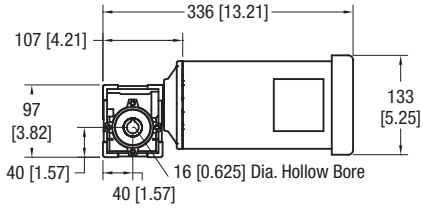

Regulatory Approvals

RoHS

Part Number	RPM	Gearmotor Type	Hp	kW	FLA	in.-lbs.	Nm	Vari-Speed Control Chart
22M060ESD3DEN	42	L	0.33	0.25	2.3	134	15.1	A
22M040ESD3DEN	63	L	0.33	0.25	2.3	160	18.1	A
22M020ESD3DEN	125	L	0.33	0.25	2.3	151	17.1	A
22M010ESD3DEN	250	L	0.33	0.25	2.3	100	11.3	A

Chart 4 90° edrive NEMA C-Face VFD Rated (For use on side mount packages only)

- Variable frequency drive, 6 - 60 Hz
- Sealed gearmotor
- NEMA 56C C Face
- Totally enclosed, fan cooled
- 230/460 Volts, 3 phase
- Order controller separately, see page 70

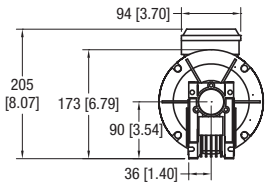

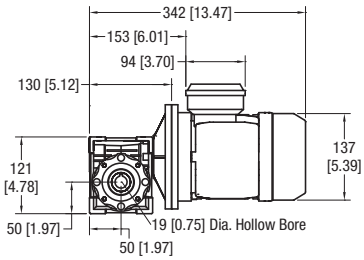

Regulatory Approvals

RoHS

Part Number	RPM	Gearmotor Type	Hp	kW	FLA	in.-lbs.*	Nm	Vari-Speed Control Chart
32M060EL423EN	29	K	0.5**	0.19	1.71 / 1.14	319	36	D and E
32M040EL423EN	43	K	0.5**	0.19	1.71 / 1.14	238	26.9	D and E
32M020EL423EN	86	K	0.5**	0.19	1.71 / 1.14	142	16.0	D and E
32M010EL423EN	173	K	0.5**	0.19	1.71 / 1.14	77	8.7	D and E

* = At 60 Hz ** = Motor de-rated to 0.25 Hp for full torque throughout speed range.

FLA = Full Load Amperes

Some motors and gear reducers may normally operate hot to the touch. Consult factory for specific operating temperatures. Note: Dimensions = mm (in)

Light Load, Variable Speed (continued)

Chart 5 90° eDrive IEC C-Face VFD Rated (For use on side mount packages only)

- Variable frequency drive, 25 - 63 Hz
- Sealed gearmotor
- IEC 63 B5 C face
- IP 55 protection rating
- Totally enclosed, fan cooled
- 230/400 Volts, 3 phase
- Order controller separately, see page 70

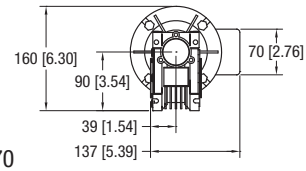

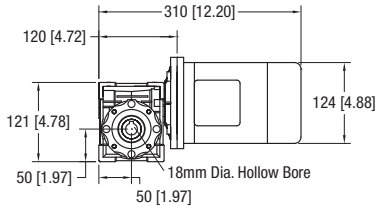

Regulatory Approvals

Part Number	RPM	Gearmotor Type	3 Ph kW	3 Ph FLA	Nm*	Vari-Speed Control Chart
62Z060ES423EN	23	L	0.25	1.56 / 0.90	36	B
62Z040ES423EN	35	L	0.25	1.56 / 0.90	35.5	B
62Z020ES423EN	70	L	0.25	1.56 / 0.90	21.2	B
62Z010ES423EN	140	L	0.25	1.56 / 0.90	11.4	B

* = At 50 Hz

Note: When buying a gearmotor only without the starter, the customer must supply their own on/off switch and motor overload protection to comply with the CE Safety Directive.

Standard Load, Fixed Speed

Chart 6 90° eDrive NEMA C-Face

- Sealed gearmotors
- NEMA 56 C face
- Totally enclosed, fan cooled
- 115V 1 phase includes switch, cord and overload protection
- 208-230/460 Volts 3 phase wiring by others
- 60 Hz
- Order 3 phase starter separately, see page 72

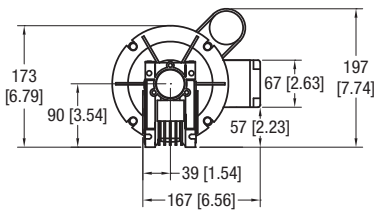

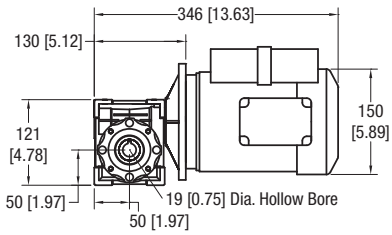

Regulatory Approvals

RoHS

Part Number	RPM	Gearmotor Type	1 Phase			3 Phase			in.-lbs.	Nm	Starter Chart
			Hp	kW	FLA	Hp	kW	FLA			
32M060ES4(vp)FN	29	S	0.5	0.37	5.7	0.5	0.37	1.76-1.71 / 1.14	319	36	M
32M040ES4(vp)FN	43	S	0.5	0.37	5.7	0.5	0.37	1.76-1.71 / 1.14	378	42.7	M
32M020ES4(vp)FN	86	S	0.5	0.37	5.7	0.5	0.37	1.76-1.71 / 1.14	285	32.2	M
32M010ES4(vp)FN	173	S	0.5	0.37	5.7	0.5	0.37	1.76-1.71 / 1.14	153	17.3	M

(vp) = Voltage and Phase 11 = 115V, 1 phase 23 = 208 - 230 / 460V, 3 phase

FLA = Full Load Amperes

Some motors and gear reducers may normally operate hot to the touch. Consult factory for specific operating temperatures. Note: Dimensions = mm (in)

Standard Load, Fixed Speed (continued)

Chart 7 — Parallel Shaft NEMA

- Sealed gearmotor
- Totally enclosed, fan cooled
- 115V 1 phase includes switch, cord and overload protection
- 230V 3 phase wiring by others
- 60 Hz
- Order 3 phase starter separately, see page 72

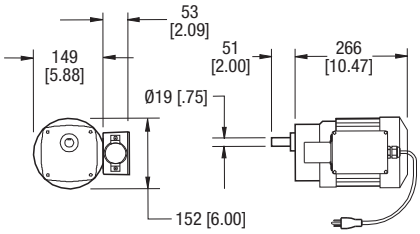

Regulatory Approvals

Part Number	RPM	Gearmotor Type	1 Phase			3 Phase			in.-lbs.	Nm	Starter Chart
			Hp	kW	FLA	Hp	kW	FLA			
62M180PS4(vp)FN	10	S	0.08	0.06	1.2	.17	0.13	1.0	341	38.5	L
62M060PS4(vp)FN	29	S	0.17	0.13	1.9	.17	0.13	1.0	270	30.5	L
(x)2M030PS4(vp)FN	58	S	0.33	0.25	4	.38	0.28	1.9	250	28.3	M
(x)2M020PS4(vp)FN	86	S	0.33	0.25	4	.38	0.28	1.9	167	18.9	M
(x)2M010PS4(vp)FN	173	S	0.33	0.25	4	.38	0.28	1.9	108	12.2	M
(x)2M005PS4(vp)FN	345	S	0.33	0.25	4	.38	0.28	1.9	56	6.3	M

(vp) = Voltage and Phase 11 = 115V, 1 phase 23 = 208 - 230 / 460V, 3 phase (x) = 3 for 1 phase, 6 for 3 phase

Chart 8 — 90° eDrive IEC C-Face

- Sealed gearmotor
- IEC 71 B5 C face for 0.37 kW Motor
- IEC 63 B5 C face for 0.18 kW Motor
- IP55 protection rating
- Order starter separately, see page 72
- Totally enclosed, fan cooled
- Non-reversible
- 50 Hz

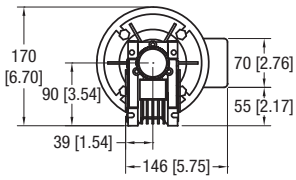

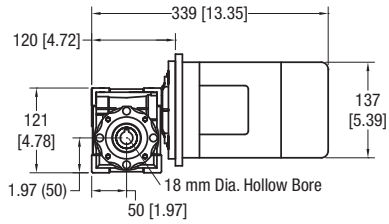

Regulatory Approvals

Part Number	RPM	Gearmotor Type	1Ph kW	1 Ph FLA	3 Ph kW	3 Ph FLA	Nm	Starter Chart
62Z060ES4(vp)FN	23	L	0.18	1.6	0.25	1.56 / 0.90	36/36	I
62Z040ES4(vp)FN	35	L	0.18	1.6	0.25	1.56 / 0.90	26.9/35.5	I
32Z020ES4(vp)FN	70	S	0.37	2.6	0.37	2.1 / 1.2	32.2	J
32Z010ES4(vp)FN	140	S	0.37	2.6	0.37	2.1 / 1.2	17.3	J
32Z005ES4(vp)FN	280	S	0.37	2.6	0.37	2.1 / 1.2	9	J

(vp) = Voltage and Phase 21 = 230V, 1 phase 23 = 230V / 460V, 3 phase 43 = 400V, 3 phase

Chart 20 — 90° SEW

- SEW SA37 Gearmotor
- Bottom and side mount packages available
- 230 / 460 V 3 Phase
- VFD Compatible with constant torque from 10 to 60 Hz
- Sealed gear head, totally enclosed fan cooled motor

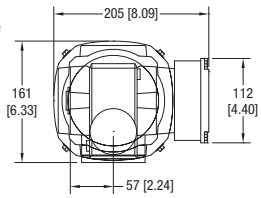

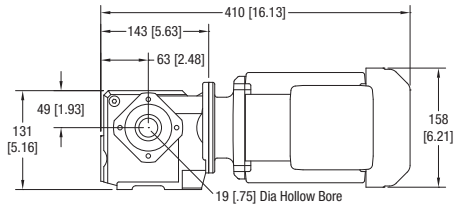

Regulatory Approvals

Part Number	RPM*	Gearmotor Type	Hp	kW	FLA	in-lbs	Nm	Starter Chart
32M038WS423EN	47	W	0.50	0.37	1.84 / 0.92	548	61.9	M
32M013WS423EN	134	W	0.75	0.56	2.50 / 1.25	327	37.0	M
32M007WS423EN	264	W	1.00	0.75	2.90 / 1.44	221	25.0	P

(vp) = Voltage and Phase 21 = 230V, 1 phase 23 = 230V / 460V, 3 phase 43 = 400V, 3 phase

FLA = Full Load Amperes
Some motors and gear reducers may normally operate hot to the touch. Consult factory for specific operating temperatures. Note: Dimensions = mm (in)

CE **Note:** When buying a gearmotor only without the starter, the customer must supply their own on/off switch and motor overload protection to comply with the CE Safety Directive.

Standard Load, Variable Speed

Chart 9 — 90 NEMA C-Face DC°

- 90V DC
- Sealed gearmotor
- NEMA 56 C Face
- Totally enclosed, fan cooled
- Order controller separately, see page 70

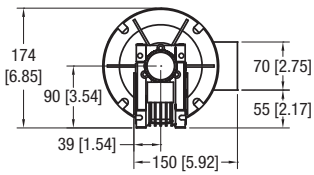

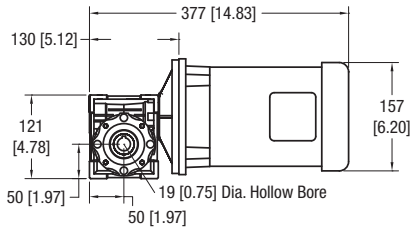

Regulatory Approvals

Part Number	RPM	Gearmotor Type	Hp	kW	FLA	in.-lbs.	Nm	Vari-Speed Control Chart
32M060ESD9DEN	42	S	0.5	0.37	5.0	319	36	C
32M040ESD9DEN	63	S	0.5	0.37	5.0	378	42.7	C
32M020ESD9DEN	125	S	0.5	0.37	5.0	285	32.2	C
62M005EHD9DEN	250	S	0.75	0.5	7.5	108	12.2	C

Chart 10 — 90° eDrive NEMA C-Face VFD Rated

- Variable frequency drive, 6 - 60 Hz
- Sealed gearmotor
- NEMA 56 C Face
- Totally enclosed, fan cooled
- 230/460 Volts, 3 Phase
- Order controller separately, see page 70

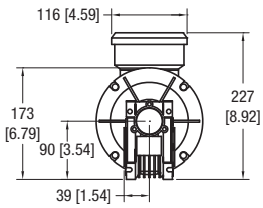

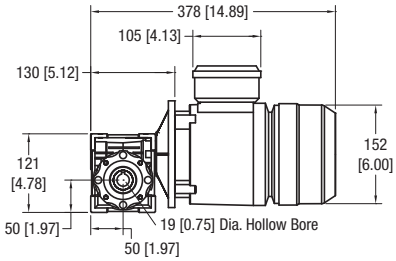

Regulatory Approvals

Part Number	RPM*	Gearmotor Type	3 Ph Hp	3 Ph kW	3 Ph FLA	in.-lbs.*	Nm*	Vari-Speed Control Chart
32M060ES423EN	29	S	0.75**	0.55	2.6 / 1.3	319	36	D and E
32M040ES423EN	43	S	0.75**	0.55	2.6 / 1.3	378	42.7	D and E
32M020ES423EN	86	S	0.75**	0.55	2.6 / 1.3	285	32.2	D and E
32M010ES423EN	173	S	0.75**	0.55	2.6 / 1.3	153	17.3	D and E

* = At 60 Hz ** = Motor is de-rated to 0.5 Hp for full torque throughout the speed range.

Chart 26 — Parallel Shaft Brushless DC

- Closed loop brushless DC with hall effect feedback
- Sealed gearbox
- IP65 totally enclosed non-ventilated motor
- 100 to 3000 rpm motor
- Includes motor cord with quick disconnect
- Order controller separately, see page 70

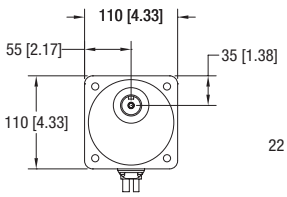

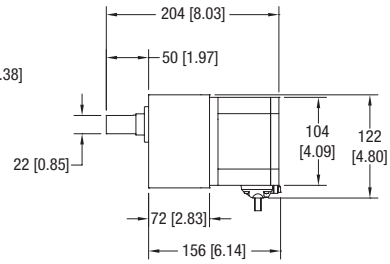

Regulatory Approvals

Part Number	Max RPM	Min RPM	Gearmotor Type	Hp	kW	FLA	in.-lbs.	Nm	Vari-Speed Control Chart
62M050PSBDDENB	60	2	B	0.25	0.2	see control	230	25.7	F
62M020PSBDDENB	150	5	B	0.25	0.2	see control	88	9.7	F
62M010PSBDDENB	200	10	B	0.25	0.2	see control	38	4.2	F

FLA = Full Load Amperes

Some motors and gear reducers may normally operate hot to the touch. Consult factory for specific operating temperatures. Note: Dimensions = mm (in)

Standard Load, Variable Speed (continued)

Chart 11 — 90° eDrive IEC C-Face VFD Rated

- Variable frequency drive, 25 - 63 Hz
- Sealed gearmotor
- IEC 63 B5 C Face for 0.18 kW Motor
- IEC 71 B5 C Face for 0.37 kW Motor
- IP 55 protection rating
- Totally enclosed, fan cooled
- 230/400 Volts, 3 Phase
- Order controller separately, see page 70

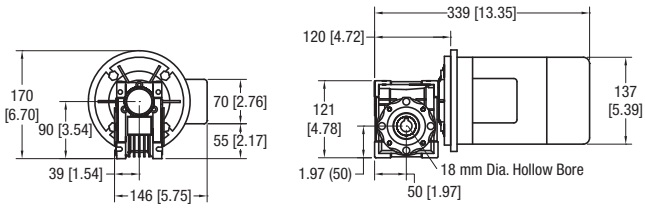

Regulatory Approvals

Part Number	RPM	Gearmotor Type	3 Ph kW	3 Ph FLA	Nm*	Vari-Speed Control Chart
62Z060ES423EN	23	L	0.25	1.56 / 0.90	36	B
62Z040ES423EN	35	L	0.25	1.56 / 0.90	35.5	B
32Z020ES423EN	70	S	0.37	2.1 / 1.2	32.2	B
32Z010ES423EN	140	S	0.37	2.1 / 1.2	17.3	B
32Z005ES423EN	280	S	0.37	2.1 / 1.2	9	B

* = At 50 Hz

Note: When buying a gearmotor only without the starter, the customer must supply their own on/off switch and motor overload protection to comply with the CE Safety Directive.

Chart 12 — Parallel Shaft NEMA DC

- 130 Volts DC
- Sealed gearmotor
- Totally enclosed, non-ventilated
- 300 - 2500 RPM motor
- Order controller separately, see page 70

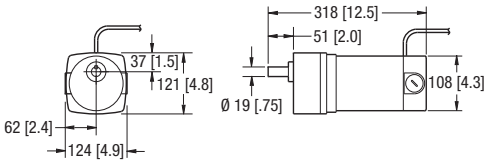

Regulatory Approvals

Part Number	RPM	Gearmotor Type	Hp	kW	FLA	in.-lbs.	Nm	Vari-Speed Control Chart
62M180PSD3DEN	14	S	0.12	0.09	1.0	341	38.5	A
62M060PSD3DEN	42	S	0.25	0.19	1.8	270	30.5	A
62M030PSD3DEN	83	S	0.25	0.19	1.8	135	15.3	A
62M020PSD3DEN	125	S	0.25	0.19	1.8	90	10.2	A
62M010PSD3DEN	250	S	0.33	0.25	2.3	72	8.1	A

Chart 13 — Parallel Shaft NEMA VFD Rated

- Variable frequency drive, 10 to 60 Hz
- Sealed gearmotor
- Totally enclosed, fan cooled
- 230/460 Volts / 3 Phase, VFD duty
- Order controller separately, see page 70

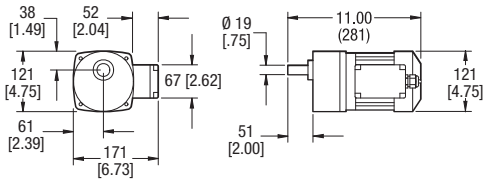

Regulatory Approvals

RoHS

Part Number	RPM	Gearmotor Type	Hp	kW	FLA	in.-lbs.	Nm	Vari-Speed Control Chart
62M180PS423EN	10	S	0.17	0.13	1.0	341	38.5	D and E
62M060PS423EN	29	S	0.17	0.13	1.0	270	30.5	D and E
62M030PS423EN	58	S	0.38	0.28	1.9	250	28.3	D and E
62M020PS423EN	86	S	0.38	0.28	1.9	167	18.9	D and E
62M010PS423EN	173	S	0.38	0.28	1.9	115	13.0	D and E

FLA = Full Load Amperes

Some motors and gear reducers may normally operate hot to the touch. Consult factory for specific operating temperatures. Note: Dimensions = mm (in)

Standard Load, Variable Speed (continued)

Chart 21 90° Sew VFD Rated

- SEW SA37 Gearmotor
- Bottom and side mount packages available
- 230 / 460 V 3 Phase
- VFD Compatible with constant torque from 10 to 60 Hz
- Sealed gear head, totally enclosed fan cooled motor

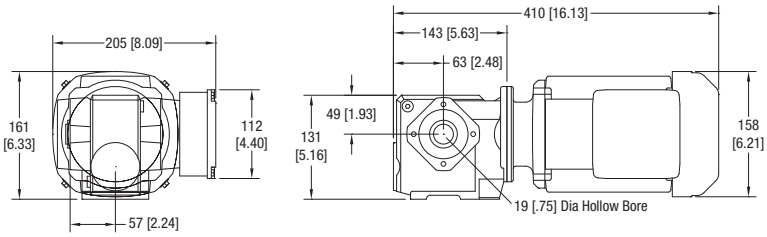

Regulatory Approvals

Part Number	RPM*	Gearmotor Type	Hp	kW	FLA	in-lbs	Nm	Vari-Speed Control Chart
32M038WS423EN	47	W	0.50	0.37	1.84 / 0.92	548	61.9	D or E
32M013WS423EN	134	W	0.75	0.56	2.50 / 1.25	327	37.0	D or E
32M007WS423EN	264	W	1.00	0.75	2.90 / 1.44	221	25.0	D

Heavy Load, Fixed Speed

Chart 15 90° eDrive NEMA C-Face

- NEMA 56 C face for .5 & 1 Hp
- NEMA 145TC C face for 1.5 Hp
- NEMA 145TC C face for 2 Hp
- Totally enclosed, fan cooled
- 115V, 1 Phase includes switch, cord and overload protection
- 208 - 230/460 Volts, 3 Phase wiring by others
- 60 Hz
- Order 3 phase starter separately, see page 72

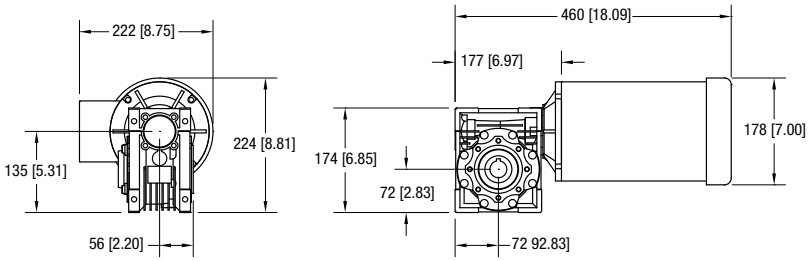

Regulatory Approvals

RoHS

Part Number	RPM	Gearmotor Type	1 Phase			3 Phase			in.-lbs.	Nm	3 Phase Starter Chart
			Hp	kW	FLA	Hp	kW	FLA			
32M100EH4(vp)FN	17	H	0.5	0.37	8.0	0.5	0.37	2.0 / 1.0	913	103	M
32M080EH4(vp)FN	22	H	0.5	0.37	8.0	0.5	0.37	2.0 / 1.0	833	94	M
32M060EH4(vp)FN	29	H	0.5	0.37	8.0	0.5	0.37	2.0 / 1.0	679	76	M
32M050EH423FN	35	H	n/a	n/a	n/a	1.0	0.74	3.4 / 1.7	1205	136	P
32M040EH423FN	43	H	n/a	n/a	n/a	1.0	0.74	3.4 / 1.7	1023	115	P
32M030EH423FN	58	H	n/a	n/a	n/a	1.5	1.11	5.0 / 2.5	1216	137	Q
32M025EH423FN	70	H	n/a	n/a	n/a	1.5	1.11	5.0 / 2.5	1068	121	Q
32M020EH423FN	86	H	n/a	n/a	n/a	2.0	1.49	6.2 / 3.1	1183	134	Q
32M015EH423FN	115	H	n/a	n/a	n/a	2.0	1.49	6.2 / 3.1	909	103	Q
32M010EH423FN	173	H	n/a	n/a	n/a	2.0	1.49	6.2 / 3.1	636	72	Q
32M008EH423FN	230	H	n/a	n/a	n/a	2.0	1.49	6.2 / 3.1	482	54	Q

FLA = Full Load Amperes

Some motors and gear reducers may normally operate hot to the touch. Consult factory for specific operating temperatures. Note: Dimensions = mm (in)

Heavy Load, Fixed Speed (continued)

Chart 16 — 90° eDrive IEC C-Face

- Sealed gearmotor
- IP55 protection rating
- 50 Hz
- IEC B5 C face mount (see table for size)
- Totally enclosed, fan cooled
- Order starter separately, see page 72

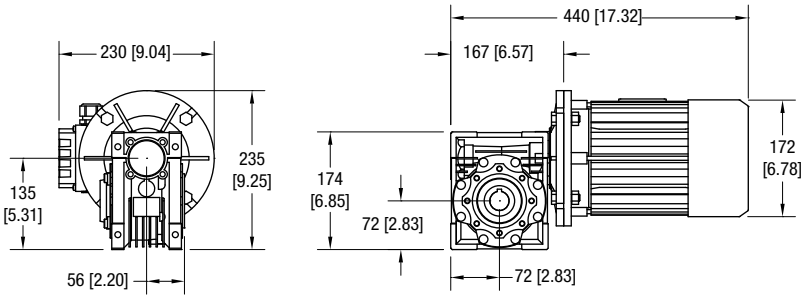

Regulatory Approvals

RoHS

Part Number	RPM	Gearmotor Type	Belt Speed ft/min	Belt Speed m/min	Motor Face	Hp	kW	FLA	in-lbs	Nm	Starter Chart
52Z100EH423FN	14	H	14	4.3	71	0.5	0.37	2.1 / 1.2	1142	129	J
52Z080EH423FN	18	H	18	5.3	71	0.5	0.37	2.1 / 1.2	1018	115	J
52Z050EH423FN	28	H	28	8.5	80	0.7	0.55	2.6 / 1.5	1097	124	R
52Z040EH423FN	35	H	35	10.7	80	0.7	0.55	2.6 / 1.5	929	105	R
52Z030EH423FN	47	H	47	14.2	90	1.5	1.10	4.7 / 2.7	1478	167	K
52Z020EH423FN	70	H	70	21.3	90	1.5	1.10	4.7 / 2.7	1080	122	K
52Z015EH423FN	93	H	93	28.4	90	2.0	1.50	6.1 / 3.5	1124	127	K
52Z010EH423FN	140	H	140	42.7	90	2.0	1.50	6.1 / 3.5	788	89	K
52Z008EH423FN	187	H	187	56.9	90	2.0	1.50	6.1 / 3.5	602	68	K

23 = 230V, 3 phase 43 = 430V, 3 phase

Note: LPZ Conveyors are not reversible

CE **Note:** When buying a gearmotor only without the starter, the customer must supply their own on/off switch and motor overload protection to comply with the CE Safety Directive.

Chart 22 — 90° SEW

- SEW SA47 Gearmotor
- Center mount packages only
- 230 / 460 V 3 Phase
- VFD Compatible with constant torque from 10 to 60 Hz
- Sealed gear head, totally enclosed fan cooled motor

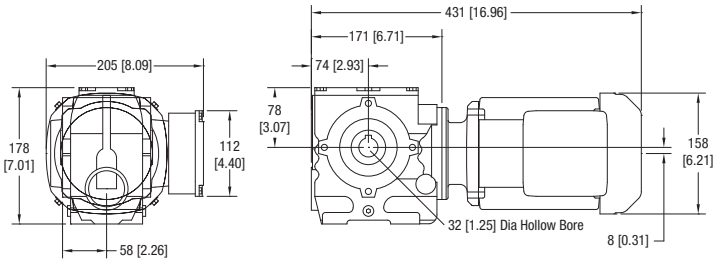

Regulatory Approvals

Part Number	RPM*	Gearmotor Type	Hp	kW	FLA	in-lbs	Nm	Starter Chart
32M128WH423EN*	13	W	0.33	0.25	1.14 / 0.57	991	112.0	L
32M044WH423EN*	38	W	0.75	0.56	2.50 / 1.25	973	109.9	M
32M016WH423EN*	106	W	1.50	1.12	4.50 / 2.25	787	88.9	Q
32M008WH423EN*	201	W	2.00	1.49	5.70 / 2.85	575	65.0	Q

* 20 day lead time required

FLA = Full Load Amperes

Some motors and gear reducers may normally operate hot to the touch. Consult factory for specific operating temperatures. Note: Dimensions = mm (in)

Heavy Load, Variable Speed

Chart 18 90° eDrive NEMA C-Face VFD Rated

- Variable frequency drive, 15 - 60 Hz
- NEMA 56 C face for .5 Hp + 1 Hp
- NEMA 145TC C face for 1.5 + 2 Hp
- Totally enclosed, fan cooled
- 230/460 Volts, 3 phase
- Order controller separately, see page 70

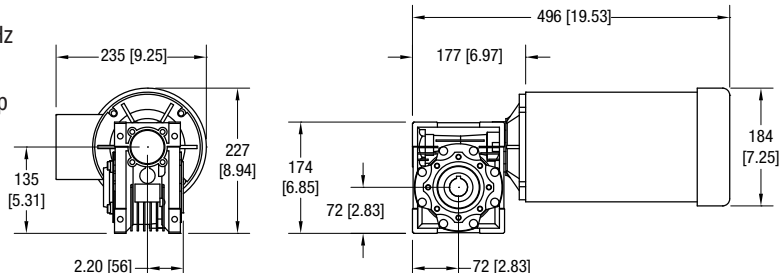

Regulatory Approvals

RoHS

Part Number	RPM	Gearmotor Type	Hp	kW	FLA	in.-lbs.*	Nm*	Vari-Speed Control Chart
32M100EH423EN	17	H	0.5	0.37	1.6 / 0.8	913	103	D or E
32M080EH423EN	22	H	0.5	0.37	1.6 / 0.8	833	94	D or E
32M060EH423EN	29	H	0.5	0.37	1.6 / 0.8	679	76	D or E
32M050EH423EN	35	H	1.0	0.74	3.2 / 1.6	1205	136	D
32M040EH423EN	43	H	1.0	0.74	3.2 / 1.6	1023	115	D
32M030EH423EN	58	H	1.5	1.11	4.2 / 2.1	1216	137	D
32M025EH423EN	70	H	1.5	1.11	4.2 / 2.1	1068	121	D
32M020EH423EN	86	H	2.0	1.49	5.0 / 2.5	1183	134	D
32M015EH423EN	115	H	2.0	1.49	5.0 / 2.5	909	103	D
32M010EH423EN	173	H	2.0	1.49	5.0 / 2.5	636	72	D
32M008EH423EN	230	H	2.0	1.49	5.0 / 2.5	482	54	D

* = At 60 Hz

FLA = Full Load Amperes

Some motors and gear reducers may normally operate hot to the touch. Consult factory for specific operating temperatures. Note: Dimensions = mm (in)

Heavy Load, Variable Speed (continued)

Chart 19 — 90° eDrive IEC C-Face, VFD Rated

- Variable frequency drive, 25 to 63 Hz
- Sealed gearmotor
- IP55 protection rating
- 230/400 Volts, 50 Hz nominal
- IEC B5 C face mount (see table for size)
- Totally enclosed, fan cooled
- Order controller separately, see page 70

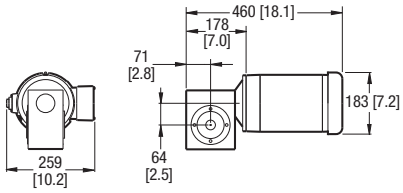

Regulatory Approvals

Part Number	RPM	Gearmotor Type	Belt Speed ft/min	Belt Speed m/min	Motor Face	Hp	kW	FLA	in-lbs	Nm	Controller Chart
52Z100HH423EN	7 to 18	H	7 to 18	2 to 5	71	0.5	0.37	2.1 / 1.2	1142	129	B
52Z080HH423EN	9 to 22	H	9 to 22	3 to 7	71	0.5	0.37	2.1 / 1.2	1018	115	B
52Z050HH423EN	14 to 35	H	14 to 35	4 to 11	80	0.7	0.55	2.6 / 1.5	1097	124	B
52Z040HH423EN	18 to 44	H	18 to 44	5 to 13	80	0.7	0.55	2.6 / 1.5	929	105	B
52Z030HH423EN	23 to 59	H	23 to 59	7 to 18	90	1.5	1.10	4.7 / 2.7	1478	167	B
52Z020HH423EN	35 to 88	H	35 to 88	11 to 27	90	1.5	1.10	4.7 / 2.7	1080	122	B
52Z015HH423EN	47 to 118	H	47 to 118	14 to 36	90	2.0	1.50	6.1 / 3.5	1124	127	B
52Z010HH423EN	70 to 176	H	70 to 176	21 to 54	90	2.0	1.50	6.1 / 3.5	788	89	B
52Z008HH423EN	93 to 235	H	93 to 235	28 to 72	90	2.0	1.50	6.1 / 3.5	602	68	B

23 = 230V, 3 phase 43 = 430V, 3 phase
FLA = Full Load Amperes
Note: LPZ Conveyors are not reversible

CE **Note:** When buying a gearmotor only without the starter, the customer must supply their own on/off switch and motor overload protection to comply with the CE Safety Directive.

Chart 23 — 90° SEW VFD Rated

- SEW SA47 Gearmotor
- Center mount packages only
- 230 / 460 V 3 Phase
- VFD Compatible with constant torque from 10 to 60 Hz
- Sealed gear head, totally enclosed fan cooled motor

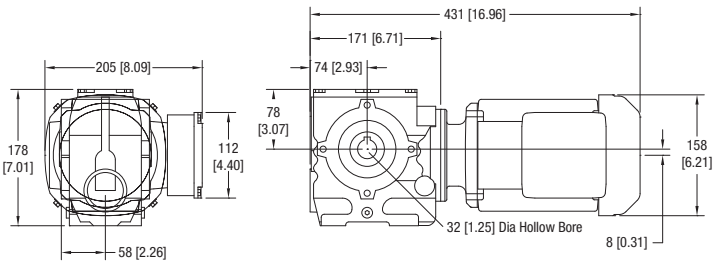

Regulatory Approvals

Part Number	RPM*	Gearmotor Type	Hp	kW	FLA	in-lbs	Nm	Vari-Speed Control Chart
32M128WH423EN*	13	W	0.33	0.25	1.14 / 0.57	991	112.0	D or E
32M044WH423EN*	38	W	0.75	0.56	2.50 / 1.25	973	109.9	D or E
32M016WH423EN*	106	W	1.50	1.12	4.50 / 2.25	787	88.9	D
32M008WH423EN*	201	W	2.00	1.49	5.70 / 2.85	575	65.0	D

* 20 day lead time required

FLA = Full Load Amperes

Some motors and gear reducers may normally operate hot to the touch. Consult factory for specific operating temperatures. Note: Dimensions = mm (in)

Control Product Family

Manual Motor Starter

(see page 73)

Provides motor overload protection and lockout/tagout capability

Basic VFD Control

(see page 72)

Simple on/off, direction, and speed control right at the side of the conveyor

Full Feature VFD Control

(see page 71-72)

All the features of a Basic VFD with options to control remotely from a Dorner accessory, discrete I/O, or using a variety of industrial network protocols

Full Feature VFD with Accessory

(see page 71-72 & 77-79)

Full feature control with M12 Accessory port for a variety of applications

Brushless DC Control

(see page 72)

Provides a compact alternative to other solutions while providing indexing capabilities of 60 indexes per minute with accuracy less than 3.2 mm (1/16 in)

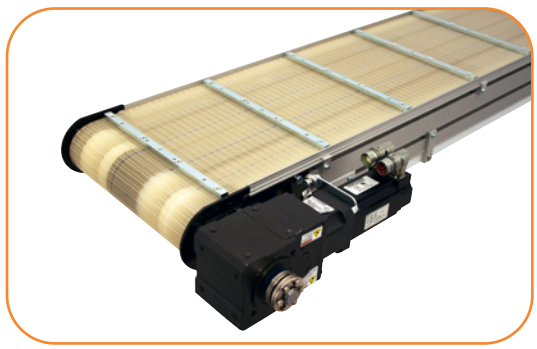

Servo Motor Control

(see page 74-77)

Provides programmable move profiles and indexing control up to 100 per minute at accuracies of 1 mm (0.040 in)

Variable Speed Controllers

Chart A

- PWM DC control
- Nema 1 enclosure
- Line cord and motor cord
- On/Off switch for 62MD1134
- Forward/Off/Reverse switch for 62MD1134R
- Speed potentiometer
- Mounting hardware

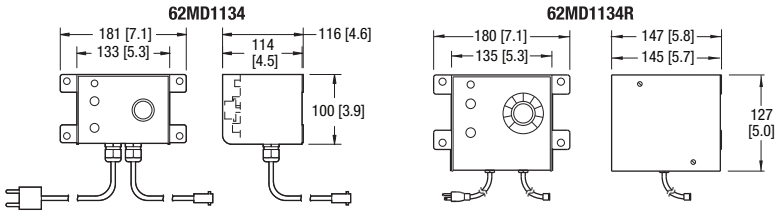

Part Number	Input Volts	Input Phase	Input Hz	Output Volts	Max Amps*	Reversing
62MD1134	115	1	60	130VDC	3.2	No
62MD1134R	115	1	60	130VDC	5.0	Yes

Chart C — Brush-Type DC Controller

- PWM DC control
- NEMA 1 enclosure
- Line cord and motor cord
- On/Off switch for 62MD1192 and 62MD1193
- Forward/Off/Reverse switch for 62MD1192R and 62MD1193R
- Speed potentiometer
- Mounting hardware

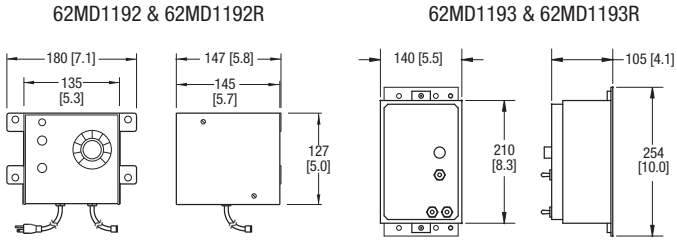

Regulatory Approvals

RoHS

Part Number	Input Volts	Input Phase	Input Hz	Output Volts	Max Amps*	Reversing
62MD1192	115	1	60	90VDC	5.0	No
62MD1192R	115	1	60	90VDC	5.0	Yes
62MD1193	115	1	60	90VDC	7.5	No
62MD1193R	115	1	60	90VDC	7.5	Yes

Chart D — Full Feature VFD Controller

- Full feature VFD control
- IP65 plastic enclosure
- Digital display
- Keypad with Start/Stop, Forward/Reverse and speed variations
- Includes cord to motor
- Power to controller by others
- Mounting hardware

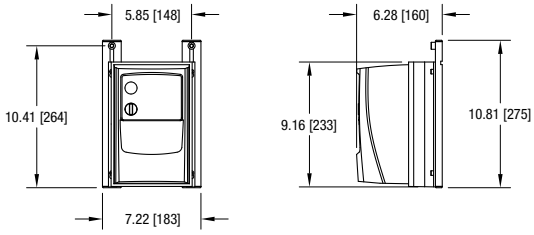

Regulatory Approvals

CE

c UL us

Part Number	Input Volts	Input Phase	Input Hz	Output Volts	Output Phase	Max Hp	Output Amps*	Reversing
32MVA1122(0)	115	1	60	230	3	0.5	2.3	Yes
32MVA2122(0)	230	1	60	230	3	0.5	2.3	Yes
32MVA1121(0)	115	1	60	230	3	1.0	4.3	Yes
32MVA2121(0)	230	1	60	230	3	1.0	4.3	Yes
32MVA2127(0)	230	1	60	230	3	2.0	7.0	Yes
32MVA2322(0)	230	3	60	230	3	0.5	4.3	Yes
32MVA2321(0)	230	3	60	230	3	1.0	2.3	Yes
32MVA2327(0)	230	3	60	230	3	2.0	7.0	Yes
32MVA4342(0)	460	3	60	460	3	0.5	1.2	Yes
32MVA4341(0)	460	3	60	460	3	1.0	2.2	Yes
32MVA4347(0)	460	3	60	460	3	2.0	4.1	Yes

In order for this drive to meet full CE requirements for European application a separate CE approve RFI filter must be installed. Product shown in chart B above have this filter pre-installed and are recommended for use in the European Union.

(0) = Optional M12 Accessory Port No Option = No Accessory Port E = M12 Port wired for End Stop Photo Eye Application
I = M12 port wired for Index Photo Eye Application Note: E or I options will work with Dorner Control Stop or Jog Button Accessories

Variable Speed Controllers (continued)

Chart E — Basic VFD Controller

- Variable frequency drive
- Aluminum backplate with plasic enclosure
- Lighted on / off switch
- Speed potentiometer
- Forward / Stop / Reverse switch (22MV1122BR)
- Includes motor cord and power cord
- Includes mounting brackets and hardware
- UL listed and RoHS compliant

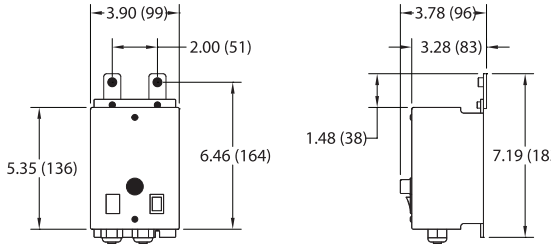

Regulatory Approvals

CE
RoHS
c UL us

Part Number	Input Volts	Input Phase	Input Hz	Output Volts	Output Phase	Max Kw*	Max Amps	Reversing
22MV1122B	115	1	60	230	3	0.5	2.4	No
22MV1122BR	115	1	60	230	3	0.5	2.4	Yes
22MV1106B	115	1	60	230	3	0.125	0.6	No
22MV1106BR	115	1	60	230	3	0.125	0.6	Yes

Chart F — Brushless DC Controller

- Closed loop brushless DC with hall effect feedback
- Nema 1 plastic enclosure
- Digital keypad and display
- Programmable speed, acceleration and deceleration
- Remote on / off and speed capable with wire access hole in enclosure provided
- Includes motor cord with quick disconnect and power cord (single phase only)
- Includes mounting brackets and hardware

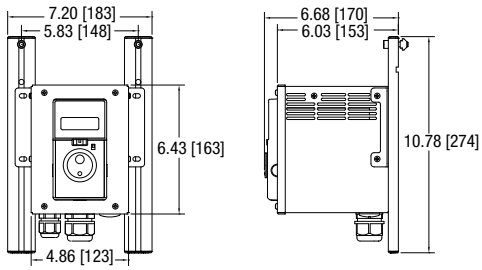

Regulatory Approvals

UL
CE

Part Number	Input Volts	Input Phase	Input Hz	Max Input Amps	Output	Max Watts	Reversing
63MBD11B60B	115	1	60	4.5	BDC	60	Yes
63MBD23B60B	230	3	60	1.5	BDC	60	Yes
63MBD11B200B	115	1	60	8.8	BDC	200	Yes
63MBD23B200B	230	3	60	3.4	BDC	200	Yes

* = See FLA from motor charts **Note:** Dimensions = mm (in)

Manual Motor Starters

Manual motor starters are manual electronic disconnects that provide motor overload protection and are required by the National Electric Code (NEC) for safe motor operation.

- IP 55 Enclosure
- Push button Start / Stop
- Includes mounting hardware

Regulatory Approvals

Illustration **A**

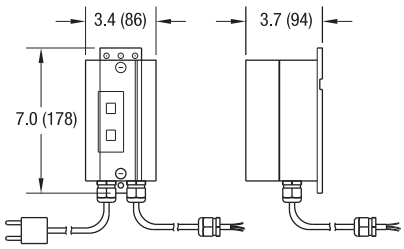

Illustration **B**

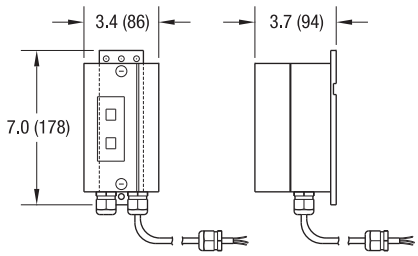

Chart I — 230/400V 50Hz to 2.5 amp

- 230 Volts, 1 phase includes cord, plug and starter
- 230/400 Volts, 3 phase wiring to starter by others
- Wiring between motor and starter provided when ordered together
- 50 Hz

Part Number	In Volts	In Phase	Amp Range	Illustration
62(c)M21T	230	1	1.6 - 2.5	A
62(c)M23T	230	3	1.0 - 1.6	B
62(c)M43T	400	3	0.63 - 1.0	B

Chart J — 230/400V 50 Hz to 4 amp

- 230 Volts, 1 phase includes cord, plug and starter
- 230/400V, 3 phase wiring to starter by others
- Wiring between motor and starter provided when ordered together
- 50 Hz

Part Number	In Volts	In Phase	Amp Range	Illustration
62(c)M21J	230	1	2.5 - 4.0	A
62(c)M23J	230	3	1.6 - 2.5	B
62(c)M43J	400	3	1.0 - 1.6	B

Chart K — 230/400 V, 50 Hz, 2.5 to 6.3 amp

- 230/400 Volts, 3 phase wiring to starter by others
- Wiring between motor and starter provided when ordered together
- 50 Hz

Part Number	In Volts	In Phase	Amp Range	Illustration
62(c)M23K	230	3	4.0 - 6.3	B
62(c)M43K	400	3	2.5 - 4.0	B

Chart L — 230/460V 60 Hz to 1.6 amp

- 230/460 Volts, 3 phase wiring to starter by others
- Wiring between motor and starter provided when ordered together
- 60 Hz

Part Number	In Volts	In Phase	Amp Range	Illustration
62MM23L	230	3	1.0 - 1.6	B
62MM43L	460	3	0.4 - .63	B

Chart M — 230/460V 60Hz to 2.5 amp

- 230/460 Volts, 3 phase wiring to starter by others
- Wiring between motor and starter provided when ordered together
- 60 Hz

Part Number	In Volts	In Phase	Amp Range	Illustration
62MM23M	208 - 230	3	1.6 - 2.5	B
62MM43M	460	3	1.0 - 1.6	B

Chart P — 230/460V 60Hz to 4 amp

- 230/460 Volts, 3 phase wiring to starter by others
- Wiring between motor and starter provided when ordered together
- 60 Hz

Part Number	In Volts	In Phase	Amp Range	Illustration
62MM23U	208 - 230	3	2.5 - 4.0	B
62MM43P	460	3	1.6 - 2.5	B

Chart Q — 230/460V 60Hz to 6.3 amp

- 230/460 Volts, 3 phase wiring to starter by others
- Wiring between motor and starter provided when ordered together
- 60 Hz

Part Number	In Volts	In Phase	Amp Range	Illustration
62MM23Q	208 - 230	3	4.0 - 6.3	B
62MM43Q	460	3	2.5 - 4.0	B

Chart R — 230/400 V, 50 Hz, 1.0 to 4.0 amp

- 230/400 Volts, 3 phase wiring to starter by others
- Wiring between motor and starter provided when ordered together
- 50 Hz

Part Number	In Volts	In Phase	Amp Range	Illustration
62(c)M23R	230	3	2.5 - 4.0	B
62(c)M43R	400	3	1.0 - 1.6	B

CE **Note:** When buying a gearmotor only without the starter, the customer must supply their own on/off switch and motor overload protection to comply with NEC and CE safety directive.

(c) = Electrical Configuration **G** = CE German
F = CE French **U** = CE Great Britain **Note:** Dimensions = mm (in)

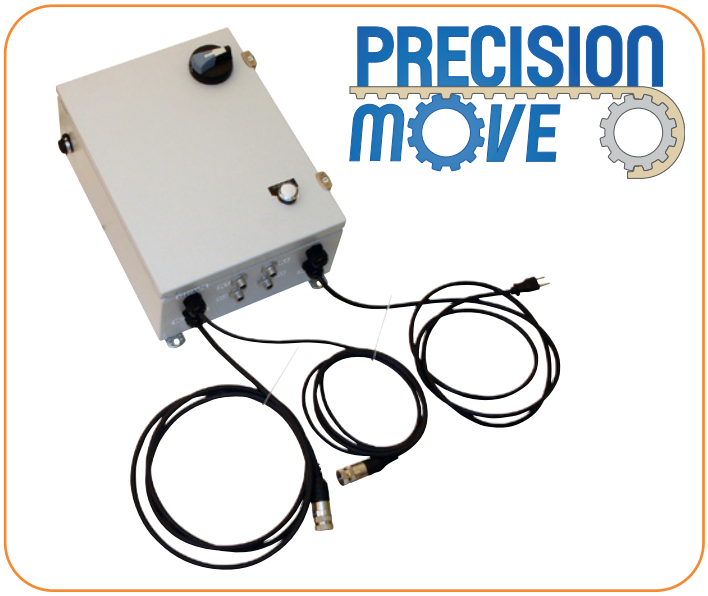

Specifications

- Plug and play compatibility with Dorner Servo Gearmotors
- Graphical user interface and icons make programming easy
- Spreadsheet-like position programming
- Real time performance feedback software
- Click of a button auto-tuning and wizard tuning per application
- Multiple homing options
- Kollmorgen AKD Series Control
- 1100 watts capacity
- (2) Input voltage options:
  - 115 Volt Single Phase input
  - 230 Volt Single Phase input
- UL listed, CE marked and RoHS compliant drive and components
- UL Labeled Controller Package
- Housed in a Nema 12 enclosure
- Includes high voltage fusing and low voltage power supply
- Quick disconnect motor cabling
- Quick disconnect sensor locations

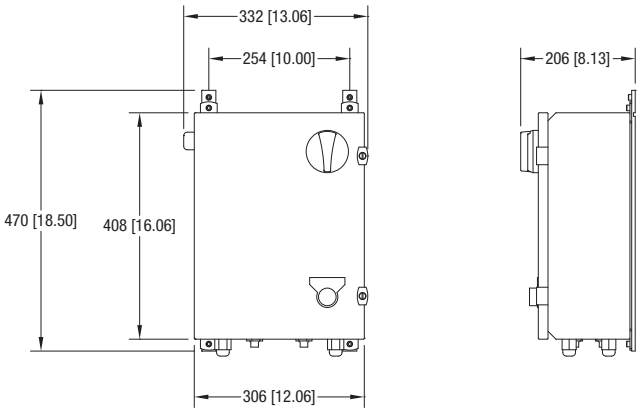

Compatible Servo Motors Available

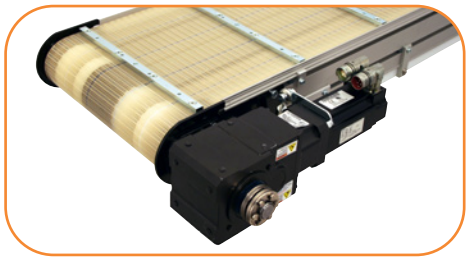

See pages 20 - 25 for more information.

Gearmotor Compatibility

Dorner Series	Part Number	Ratio	Rated Torque (in-lb)	Rated RPM @115V	Rated RPM @230V	Motor Mfg.
3200	32M008HR2B1KW	8:1	130	187	312	Kollmorgen AKM Series

Model	Part Number	Input Volts	Input Phase	Input Hz	Cont. Amps	Peak Amps	Cont. Watts
115V Stand Alone*	75M-S1-11-3	115	1	60	3	9	1100
115V External Control	75M-S2-11-3	115	1	60	3	9	1100
230V Stand Alone*	75M-S1-21-3	230	1	60	3	9	1100
230V External Control	75M-S2-21-3	230	1	60	3	9	1100

** Note: For Stand Alone Control Applications, Enable / Index Kit (75M-EN-1) is recommended. See page 77 for details.*

Due to the wide variety of conveyor and stand options along with possible configurations, stability of the final setup is the responsibility of the end user.

(2) Servo Control Methods

Stand Alone Control:

Servo Package is self-contained and the control signal is provided by a connected sensor or push button.

Programming PC with Temporary Ethernet Cable

Controller

Optional Emergency Stop

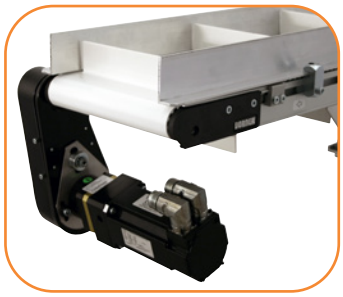

Servo Motor

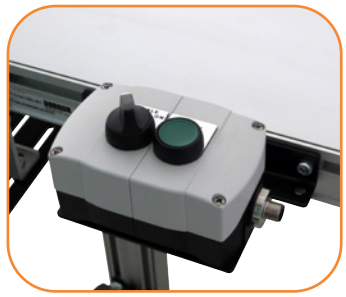

Enable / Index Kit

External Control:

Servo control signal is controlled by an external source such as a PLC or PC.

Programming PC with Temporary Ethernet Cable

Controller

External Control Signal

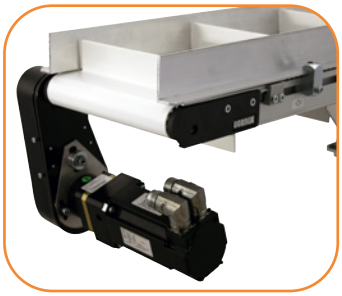

Optional Emergency Stop

MOTOR / CONTROL TORQUE CURVES

Motor Only with 115V Control

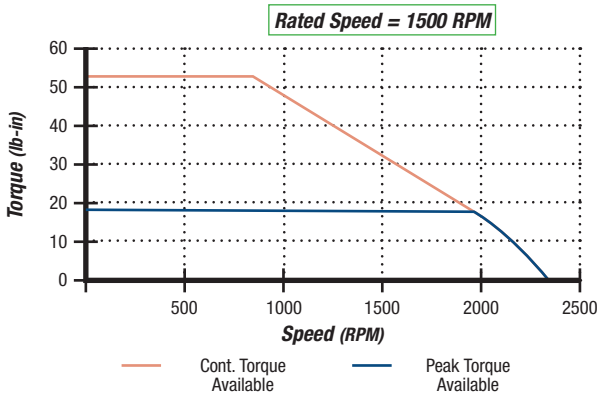

Motor Only with 230V Control

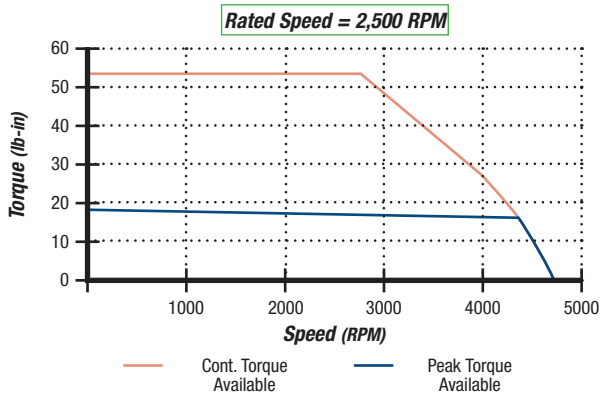

Performance Data

Accuracy:

- 3200 Series: Index consistency = ±0.020"

Maximum Speed (Velocity):

- 3200 Series: 260 ft/min = 52 in/sec

Maximum Acceleration Rate: 200 in/sec/sec

Maximum Deceleration Rate: 400 in/sec/sec

Maximum Index Rate: 100 indexes per minute (0.6 sec total
cycle; 0.2 sec accel, 0.2 sec dwell, 0.2 sec decel)

Minimum Distance for Slow Down / Deceleration

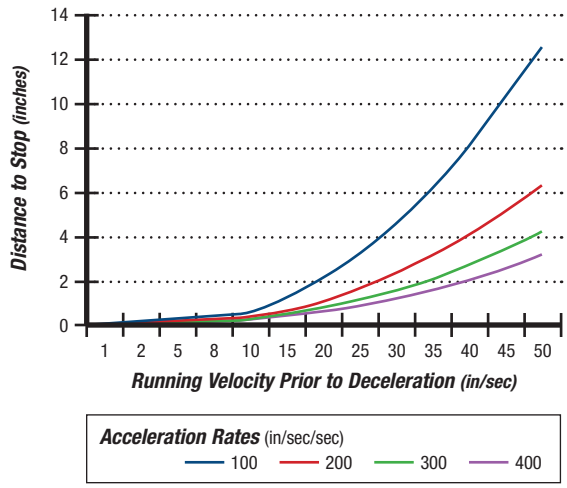

Minimum Distance for Speed Up / Acceleration

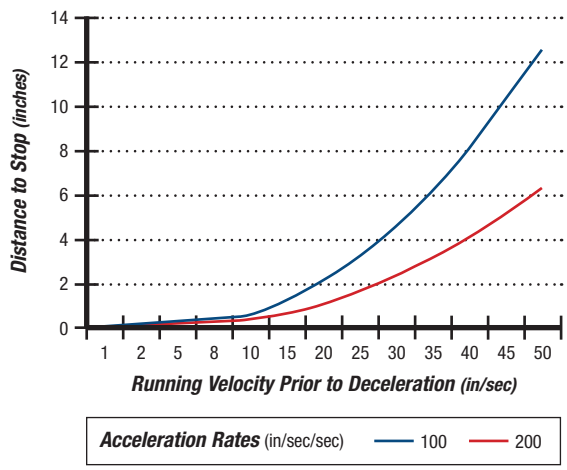

Due to the wide variety of conveyor and stand options along with possible configurations, stability of the final setup is the responsibility of the end user.

Stand Alone Servo Control – Enable / Index Kit

Specifications

- For use with stand alone servo motor controls
- Contains servo enable on/off and index initiate button
- Quick disconnect cable fittings
- Includes mounting bracket and hardware

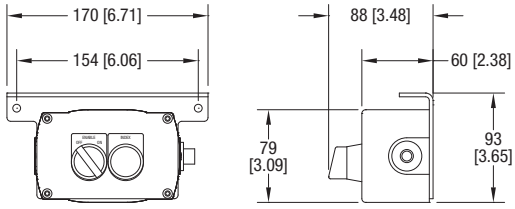

Part Number	75M-EN-1

Servo Control – Emergency Stop Kit

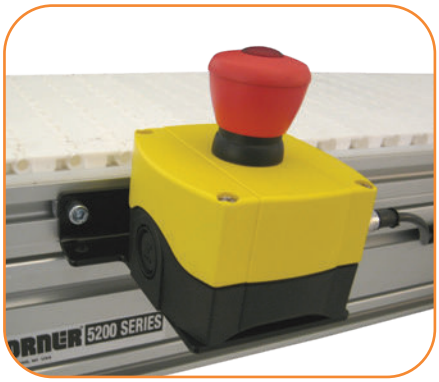

Specifications

- For use with both stand alone and external control servos motor controls
- Plastic Nema 12 Enclosure
- Quick disconnect cable fittings
- Horizontal or vertical mount
- Includes mounting bracket and hardware

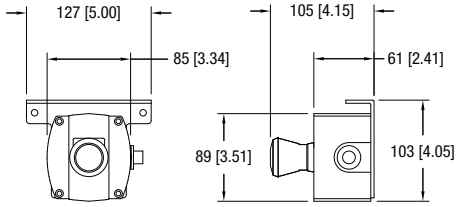

Part Number	Description
75M-ES-2	Non-Lighted E-Stop Kit

Photo Eye Kits

Specifications

- 24V DC Retro Reflective Sensor
- Quick disconnect plug
- Includes reflector and mounting
- Fully adjustable mount for 2200/3200 Series conveyors
- 51 and 127 mm (2 and 5 in) adjustment height ranges

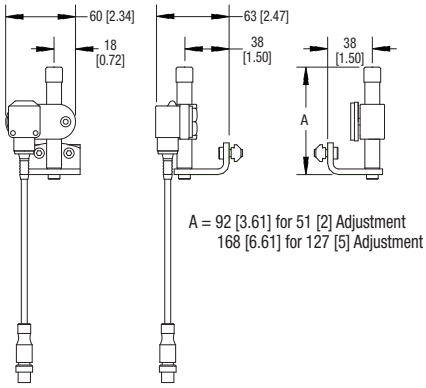

Part Number	Description
75M-PE-1	51 mm (2 in) height adjustment
75M-PE-2	127 mm (5 in) height adjustment

Not compatible with Brushless DC Controllers

Jog Push Button Kit

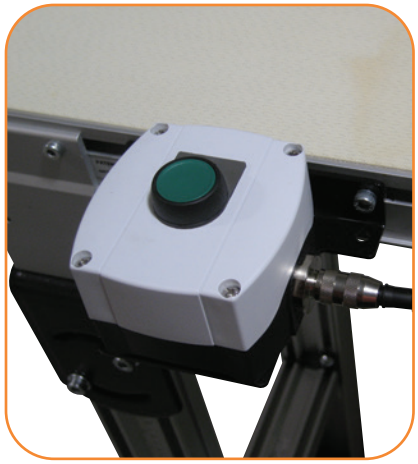

Specifications

- Momentary contact push button
- Plastic Nema 12 enclosure
- Quick disconnect receptacle
- Mounting for 2200/3200 and Support Stands
- Horizontal or vertical mount

Part Number	75M-JG-1

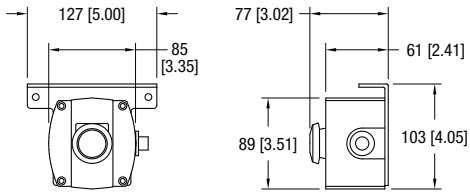

Horizontal Mount

Not compatible with Brushless DC Controllers

Control Stop Kit

Specifications

- Push to stop/pull to start maintained push button
- Plastic Nema 12 enclosure
- Quick disconnect receptacle
- Mounting for 2200/3200 and Support Stands
- Horizontal or vertical mount

Part Number	75M-CS-1

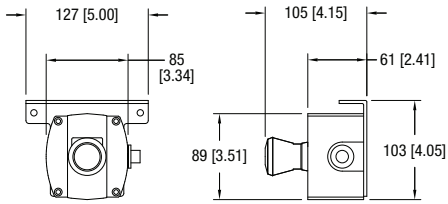

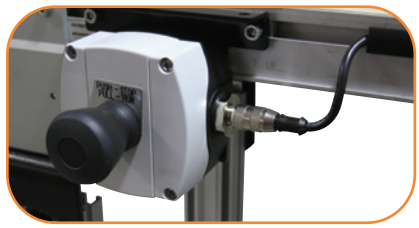

Horizontal Mount

Not compatible with Brushless DC Controllers

In-Line Cord Emergency Stop Kit

Specifications

- Push to stop/pull to start push button
- Plastic Nema 12 enclosure
- 115V single phase
- 1/2 hp (0.37 kW) and smaller motors
- Includes power and outlet cords
- Mounting for 2200/3200 and Support Stands
- Horizontal or vertical mount

Part Number	75M-ES-1

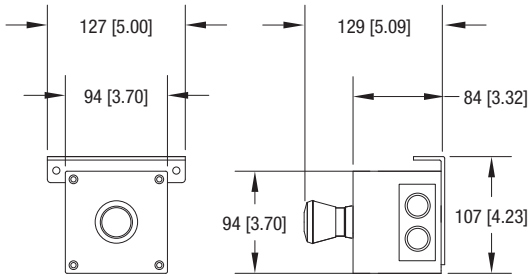

Photo Eye Bracket Kits

Specifications

- Standard mounting for 18 mm barrel/nose mount photo-eyes
- Reflective version includes reflector
- Through beam mount version
- Fully adjustable mount for 2200/3200 Series conveyors
- 51 and 127 mm (2 and 5 in) adjustment height ranges

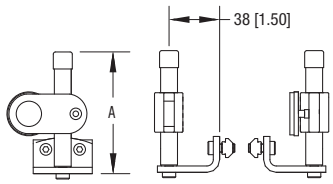

A = 92 [3.61] for 51 [2] Adjustment
168 [6.61] for 127 [5] Adjustment

Part Number	Photo Eye Mount Type	Adjustment Height
75M-PM-1	Reflective	51 mm (2 in)
75M-PM-2	Reflective	127 mm (5 in)
75M-PM-3	Through Beam	51 mm (2 in)
75M-PM-4	Through Beam	127 mm (5 in)
75M-PM-5	Convergence	51 mm (2 in)
75M-PM-6	Convergence	127 mm (5 in)

Linking Cable Kits (for VFD Indexers)

Specifications

- Quick disconnect cable for all control devices
- 2 meter and 5 meter lengths
- Includes mounting hardware for T-slots

Part Number	Description
75M-LC-1	1.83 m (6 ft) cable
75M-LC-2	4.57 m (15 ft) cable

Quantity Charts

3200 Series	
Conveyor Length	Number of Supports
914 - 3,962 mm (3 - 13 ft)	2
4,267 - 7,620 mm (14 - 25 ft)	3
7,925 - 11,278 mm (26 - 37 ft)	4
11,592 - 14,932 mm (38 - 49 ft)	5
15,240 - 18,593 mm (50 - 61 ft)	6
18,898 - 22,250 mm (62 - 73 ft)	7
22,555 - 25,908 mm (74 - 85 ft)	8
26,213 - 29,506 mm (86 - 97 ft)	9
29,870 - 30,175 mm (98 - 99 ft)	10

Z-Frame Flat Belt Conveyors		
Nose-over and Walk-Thru Conveyors		
Section Length	Number of Supports per Section	
	Section L2	Sections L1 & L3
610 to 3,962 mm (2 to 13 ft)	2	1
4,267 - 7,620 mm (14 - 25 ft)	3	2
7,925 - 11,278 mm (26 - 37 ft)	4	3
11,592 - 14,932 mm (38 - 49 ft)	5	4
15,240 - 18,593 mm (50 - 61 ft)	6	5
18,898 - 22,250 mm (62 - 73 ft)	7	6
22,555 - 25,908 mm (74 - 85 ft)	8	7
26,213 - 29,506 mm (86 - 97 ft)	9	8

Z-Frame Cleated Belt Conveyors	
Horizontal to Incline and Nose-over	
Total Conveyor Length	Number of Supports
1219 and 1524 mm (4 and 5 ft)	2
1524 to 7620 mm (5 to 25 ft)	3
Z-Frame	
1829 to 2743 mm (6 to 9 ft)	3
3048 to 7620 mm (10 to 25 ft)	4

3200 & Z-Frame (per section) Required Return Roller					
max feet between return rollers					
Conveyor Width	3.75"- 10"	12"- 20"	22"- 30"	32"- 40"	40"- 48"
Flat Belt	8	7	6	5	4
Cleated Belt	6	5	4	n/a	n/a

Quantity of return rollers required = whole number result of: $\frac{\text{conveyor length in feet}}{\text{max distance between return rollers}}$

Example Description:
3200 cleated belt 18" wide x 21' long

$\frac{21'}{5} = 4.2$ **4 return rollers required**

Mounting Brackets

Cleated Stand Mounting Bracket

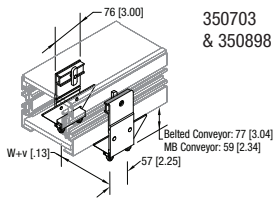

Part Number	Description
350703	Cleated Belt Conveyor
350898	Cleated Modular Belt Conveyor
715645	Cleated Modular Belt Dust Pruf Conveyor

Flat Belt Stand Mounting Bracket

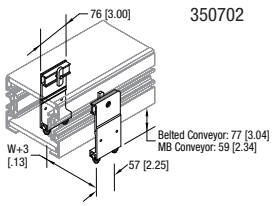

Part Number	Description
350702	Belt and Modular Belt Conveyor
715642	Modular Belt Dust Pruf Conveyor

Note: Conveyors can be ordered with the required number of mounting brackets. If desired, order additional mounting brackets separately.

Fixed Height Supports Stands

Fixed Foot Model			
Stand Width (WW)	305 mm (12 in)	51 mm (2 in) increments **up to...**	1,219 mm (48 in)
Part # Reference	12	in 02 increments **up to...**	48
Stand Height (HH)* Belt	381 - 483 mm (15 - 19 in)	in 25 mm (1 in) increments **up to...**	2,413 - 2,515 mm (95 - 99 in)
Part # Reference Belt	1519	in 0101 increments **up to...**	9599
Top of Belt Height Modular Belt	508-533 mm (20 - 21 in) 533-584 mm (21 - 23 in) 559-660 mm (22 - 26 in)	in 25 mm (1 in) increments **up to...**	2413-2515 mm (95 - 99 in)
Part # Reference Modular Belt	2021 I 2123 I 2226	in 0101 increments **up to...**	9599

- 102mm (4 in) Height Adjustment
- Provides most access to outside T-Slots
- Includes height indicator

* Dependent on stand width, stands over 1,067 mm (42 in) may include outriggers (see page 88)

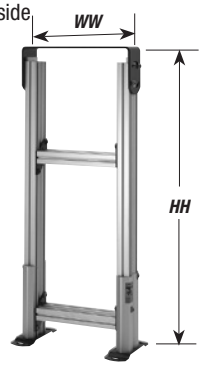

Swivel Locking Caster Model			
Stand Width (WW)	305 mm (12 in)	51 mm (2 in) increments **up to...**	1,219 mm (48 in)
Part # Reference	12	in 02 increments **up to...**	48
Stand Height (HH)* Belt	508 - 610 mm (20 - 24 in)	in 25 mm (1 in) increments **up to...**	1,727 - 1,829 mm (68 - 72 in)
Part # Reference Belt	2024	in 0101 increments **up to...**	6872
Top of Belt Height Modular Belt	635 - 660 mm (25 - 26 in) 660 - 711 mm (26 - 28 in) 660 -762 mm (26 - 30 in)	in 25 mm (1 in) increments **up to...**	1727 - 1829 mm (68 - 72 in)
Part # Reference Modular Belt	2526 I 2628 I 2630	in 0101 increments **up to...**	6872

Full width is top plate on 305 mm (12 in) wide stands only

Adjustable Height Supports Stands

Fixed Foot Model											
Stand Width (WW)	305 mm (12 in)				51 mm (2 in) increments **up to...**					1,219 mm (48 in)	
Part # Reference	12				in 02 increments **up to...**					48	
Stand Height (HH) Belt	305-330 mm (12 - 13 in)	330-381 mm (13 - 15 in)	356-432 mm (14 - 17 in)	406-660 mm (16 - 21 in)	483-686 mm (19 - 26 in)	610-914 mm 24 - 36 in)	762-1,219mm (30 - 48 in)	1,067-1,524 mm (42 - 60)*	1,372-1,829 mm (54 - 72 in)*	1,676-2,134 mm (66 - 84 in)*	1,981-2,438 mm (78 - 96 in)*
Part # Reference Belt	1213	1315	1417	1621	1926	2436	3048	4260	5472	6684	7896
Top of Belt Height Modular Belt	508-533 mm (20 - 21 in)	533-584 mm (21 - 23 in)	584-686 mm (23 - 27 in)	635-813 mm (25 - 32 in)	762-1067 mm (30 - 42 in)	914-1372 mm (36 - 54 in)	1219-1676 mm (48 - 66 in)	1524-1981 mm (60 - 78 in)	1829-2286 mm (72 - 90 in)	2057-2515 mm (81 - 99 in)	
Part # Reference Modular Belt	2021	2123	2327	2532	3042	3654	4866	6078	7290	8199	

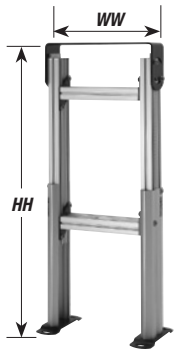

Swivel Locking Caster Model									
Stand Width (WW)	12" (305 mm)			51 mm (2 in) increments **up to...**			1,219 mm (48 in)		
Part # Reference	12			in 02 increments **up to...**			48		
Stand Height (HH) Belt	432-457 mm (17 - 18 in)	457-508 mm (18 - 20 in)	483-559 mm (19 - 22 in)	533-660 mm (21 - 26 in)	610-787 mm (24 - 31 in)	737-1,041 mm (29 - 41 in)	762-1,346 mm (35 - 53 in)	1,194-1,651 mm (47 - 65 in)*	1,499-1,956 mm (59 - 77 in)*
Part # Reference Belt	1718	1820	1922	2126	2431	2941	3553	4765	5977
Top of Belt Height Modular Belt	635-660 mm (25 - 26 in)	660-711 mm (26 - 28 in)	711-813 mm (28 - 32 in)	762-940 mm (30 - 37 in)	889-1,194 mm (35 - 47 in)	1,041-1,499 mm (41 - 59 in)	1,346-1,803 mm (53 - 71 in)	1,651-2,108 mm (65 - 83 in)	
Part # Reference Modular Belt	2526	2628	2832	3037	3547	4159	5371	6583	

- Up to 457 mm (18 in) height adjustment range
- Includes height indicator

* Dependent on stand width, stands over 1,067 mm (42 in) may include outriggers (see page 88)

Full width is top plate on 305 mm (12 in) wide stands only

Note:
Stand Height reference shown for a 3200 Series Belted Conveyor is the stand height. Top of belt on 3200 Series is approximately 178 mm (7 in) taller than the stand. Stand heights reference shown for a 3200 Series Modular Belt conveyors indicate top of belt height. Stand height is approximately 203 mm (8 in) shorter than Top of belt height.

Note: Due to the wide variety of conveyor and stand options along with possible configurations, stability of the final setup is the responsibility of the end user.

For ordering information, see page 89

Short Support Stands

Fixed Foot Model			
Stand Width (WW)	305 mm (12 in)	51 mm (2 in) increments **up to...**	1,219 mm (48 in)
Part # Reference	12	in 02 increments **up to...**	48
Stand Height (HH)* Belt	152 - 203 mm (6 - 8 in)	in 25 mm (1 in) increments **up to...**	305 - 356 mm (12 - 14 in)
Part # Reference Belt	0608	in 0101 increments **up to...**	1214
Top of Belt Height Modular Belt	356 - 406 mm (14 - 16 in)	in 25 mm (1 in) increments **up to...**	457 - 508 mm (18 - 20 in)
Part # Reference Modular Belt	1416	in 0101 increments **up to...**	1820
Swivel Locking Caster Model			
Stand Width (WW)	305 mm (12 in)	51 mm (2 in) increments **up to...**	1,219 mm (48 in)
Part # Reference	12	in 02 increments **up to...**	48
Stand Height (HH)* Belt	279 - 330 mm (11 - 13 in)	in 25 mm (1 in) increments **up to...**	305 - 483 mm (17 - 19 in)
Part # Reference Belt	1113	in 0101 increments **up to...**	1719
Top of Belt Height Modular Belt	483 - 533 mm (19 - 21 in)	in 25 mm (1 in) increments **up to...**	584 - 635 mm (23 - 25 in)
Part # Reference Modular Belt	1921	in 0101 increments **up to...**	2325

- For top belt heights below 508 mm (20 in)

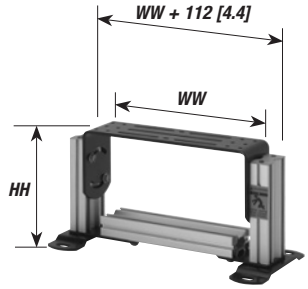

Full width is top plate on 305 mm (12 in) wide stands only

Fully Adjustable Support Stands

- Provides maximum height adjustment range
- Conveyor is located between stand legs

Fixed Foot Model							
Stand Width (WW)	44 mm (1.75 in)	70 mm (2.75 in)	95 mm (3.75 in)	127 mm (5 in)	152 mm (6 in)	51 mm (2 in) increments **up to...**	1,219 mm (48 in)
Part # Reference	02	03	04	05	06	in 02 increments **up to...**	48
Top of Belt Range	179-483 mm (7-19 in)	305-787 mm (12-31 in)	305-1,097 mm (12-43 in)	305-1,397 mm (12-55 in)	305-1,702 mm (12-67 in)		
Stand Height Reference	0719	1231	1243	1255	1267		
Swivel Locking Caster Model							
Stand Width (WW)	44 mm (1.75 in)	70 mm (2.75 in)	95 mm (3.75 in)	127 mm (5 in)	152 mm (6 in)	51 mm (2 in) increments **up to...**	1,219 mm (48 in)
Part # Reference	02	03	04	05	06	in 02 increments **up to...**	48
Top of Belt Range	305-483 mm (12-19 in)	32-787 mm (17-31 in)	432-1,097 mm (17-43 in)	432-1,397 mm (17-55 in)	432-1,702 mm (17-67 in)		
Stand Height Reference	1219	1731	1743	1755	1767		

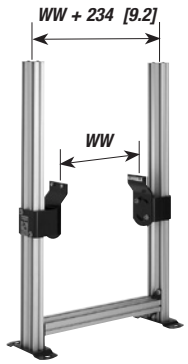

Quick Adjust Stands

Fixed Foot Model			
Stand Width (WW)*	305 mm (12 in)	51 mm (2 in)increments **up to...**	914 mm (36 in)
Part # Reference	12	in 02 increments **up to...**	36
Stand Height (HH)* Belt	610 - 762 mm (24 - 30 in)	in 25 mm (1 in) increments **up to...**	1,676 - 1,829 mm (66 - 72 in)
Part # Reference Belt	2430	in 0101 increments **up to...**	6672
Top of Belt Height Modular Belt	787 - 940mm (31 - 37 in)	in 25 mm (1 in) increments **up to...**	1,676 - 1,829 mm (66 - 72 in)
Part # Reference Modular Belt	3137	in 0101 increments **up to...**	6672
Swivel Locking Caster Model			
Stand Width (WW)*	305 mm (12 in)	51 mm (2 in) increments **up to...**	914 mm (36 in)
Part # Reference	12	in 02 increments **up to...**	36
Stand Height (HH)* Belt	686 - 838 mm (27 - 33 in)	in 25 mm (1 in) increments **up to...**	1,524 - 1,676 mm (60 - 66 in)
Part # Reference Belt	2733	in 0101 increments **up to...**	6066
Top of Belt Height Modular Belt	889 - 1041mm (35 - 41 in)	in 25 mm (1 in) increments **up to...**	1,676 - 1,829 mm (66 - 72 in)
Part # Reference Modular Belt	3541	in 0101 increments **up to...**	6672

- Metric fasteners
- +/- 76 mm (3 in) Height Adjustment
- Allows for Quick Height Adjustment
- Tool-less lock and adjustment handles

Fixed Foot Model

Swivel Locking Caster Model

* Under 305 mm (12 in) wide use full top plate option

Note: Due to the wide variety of conveyor and stand options along with possible configurations, stability of the final setup is the responsibility of the end user.

For ordering information, see page 89

3200 Series: Belt Support Stands

3 9 M T T W W - HH(min) HH(max) F

- **Feet or Casters:** **F** = Fixed Foot Pad **C** = Total Lock Swivel Caster
- **Height Reference**
- **Width Reference**
- **Stand Type:**
  - **LH** = Short Stand **FH** = Fixed Height **AH** = Adjustable Height **FA** = Fully Adjustable
  - **FT** = Tall Fixed* **AT** = Tall Adjustable* **QA** = Quick Adjust
- **Documentation Language:** **M** = US, **U** = Europe

Example: 39MAH12-2126C

Note: Due to the wide variety of converyor and stand options along with possible configuations, stability is final setup of the responsibility of the end user.
*Tall stands are required when the stand width is 3.5 times the stand height.

3200 Series: Modular Belt Support Stands

3 9 H M T T W W - HH(min) HH(max) F

- **Feet or Casters:** **F** = Fixed Foot Pad **C** = Total Lock Swivel Caster
- **Height Reference**
- **Width Reference**
- **Stand Type:**
  - **LH** = Short Stand **FH** = Fixed Height **AH** = Adjustable Height **FA** = Fully Adjustable
  - **FT** = Tall Fixed* **AT** = Tall Adjustable* **QA** = Quick Adjust
- **Documentation Language:** **M** = US, **U** = Europe
- **Conveyor Type:** **H** = Straight or Single Curve, **R** = High Strength Curve

Example: 39HMAH12-2126C

Note: Due to the wide variety of converyor and stand options along with possible configuations, stability is final setup of the responsibility of the end user.
*Tall stands are required when the stand width is 3.5 times the stand height.

Support Post Stands

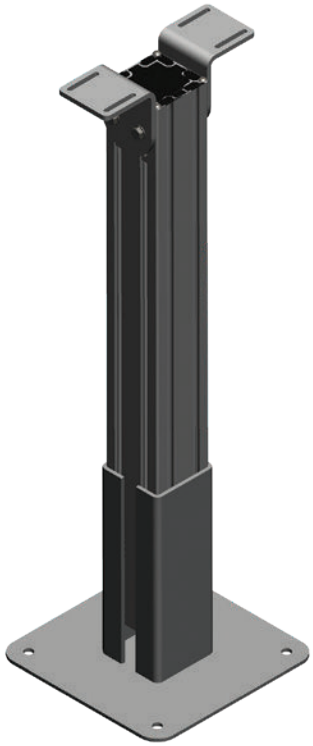

- ± 51 mm (2 in) height adjustment
- Compatible with 51 - 305 mm (2 – 12 in) wide conveyors
- Top of Belt Heights:
  - Minimum = 508 mm (20 in)
  - Maximum = 2,464mm (97 in)
  - Available in 25 mm (1 in) height increments
- Mounting Configurations:
  - ± 30° angle mount
- Equipped with a steel base plate for floor mounting
- Stand must be lagged to the floor

3200 Series: Support Post - Beam Type

320 0 P M WW - LH UH A

- **Position:** **H** = Horizontal, **A** = Angle
- **Tallest Height to TOB** (in inches)
- **Lowest Height to TOB** (in inches)
- **Width Reference**
- **Documentation Language:** **M** = US, **U** = Europe
- **Width Range:** Modular Belt **0** = 51-127 mm (2-5 in), **1** = 152-203 mm (6-8 in), **2** = 254-305 mm (10-12 in)
  Belt **3** = 76-127 mm (3-5 in), **4** = 152-203 mm (6-8 in), **5** = 254-305 mm (10-12 in)

Top of Belt Height Chart

Stand Type	Minimum Height	Maximum Height
Horizontal Mount	508mm (20 in)	2,464mm (97 in)
Angle Mount	508mm (20 in)	2,464mm (97 in)

Note: Due to the wide variety of conveyor and stand options along with possible configurations, stability of the final setup is the responsibility of the end user.

For ordering information, see page 89

Stand Accessories

Adjustable Tie Bracket

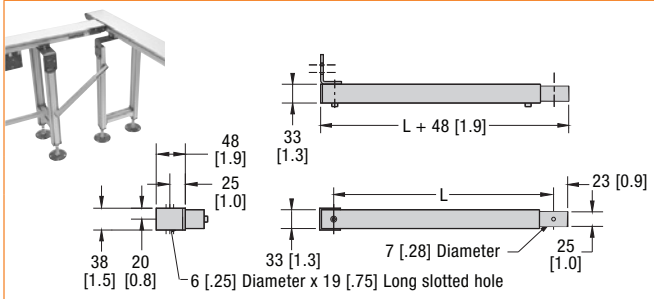

Dim = mm (in)

- Compatible with steel and aluminum support stands
- Secure critical stand and conveyor locations
- Length (L) adjusts + 0 mm (0 in), - 286mm (11.25 in)
- Includes metric mounting hardware

Part Number	Description
27M400-02	Adjustable Tie Bracket, 610 mm (2 ft)
27M400-03	Adjustable Tie Bracket, 914 mm (3 ft)
27M400-04	Adjustable Tie Bracket, 1,219 mm (4 ft)
27M400-05	Adjustable Tie Bracket, 1,524 mm (5 ft)
27M400-06	Adjustable Tie Bracket, 1,829 mm (6 ft)

Diagonal Bracing

- For use on steel, aluminum and single post support stands with casters
- Metric fastener mounting hardware included
- For use on all stands with casters and any stands over 1829 mm (72 in) tall
- One brace per stand for conveyors up to 610 mm (24 in) wide
- Two braces per stand for conveyors over 610 mm (24 in) wide

Part Number	Description
39MB-TS	for two-legged H style stands up to 762 mm (30 in) tall
39MB-TT	for two-legged H style stands over 762 mm (30 in) tall
39MB-PT	for Single Post and Pillar stands over 762 mm (30 in) tall

Common Mount Kit

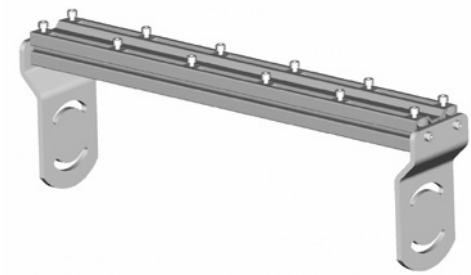

- Stand accessory for mounting multiple conveyors in parallel to one stand
- Adds 55 mm (2.179 in)) to stand height
- Adds 71 mm (2.79 in) to overall stand width

3200 Series: Common Mount Kit

39MCMV2 WW - #

- **Number of Conveyors**
- **Width Stand**

Example: 39MCMV2-244

Tall Support Stand Outriggers

Outriggers

Tall Stands are the Fixed Height and Adjustable Height Stands as shown with additional outrigger support for added stability. These outriggers are required when the height of the stand exceeds 3.5x its width, and they add 406 mm (16 in) to stand width. Tall stands over 1829 mm (6 ft) tall include diagonal bracing.

Fine Adjustment Kit

- Provides fine height adjustment via a threaded bolt
- For use with Fixed Height Stands

Part Number	710028

Note: Due to the wide variety of conveyor and stand options along with possible configurations, stability of the final setup is the responsibility of the end user.

For ordering information, see page 89

Cantilever Stand Mount (Belted Conveyor Only)

Specifications

- Widths: 51 to 610 mm (2 to 24 in) available in 25 mm (1 in) increments
- Conveyors up to 152 mm (6 in) wide are supported with a single cantilever bracket only
- Conveyors 203mm (8 in) and wider include a pivoting outboard support post
- Mounts the conveyor from one side only for quick maintenance of the conveyor belt
- (2) Models
  - Table Top Bracket
  - Support Stand Mount Bracket

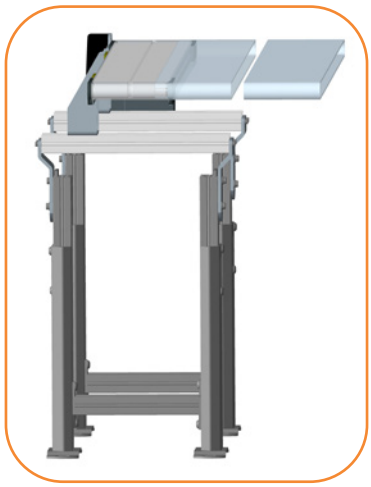

Easy Access for Quick Belt Removal

3200 Series: Cantilever Stand Mount

39MCB WW - T

- **Mount Type:**
  - **T** = Table Top Mount
  - **S** = Support Stand Mount
- **Belt Width:** 02-24

Return Rollers (Belted Conveyors Only)

Cleated Belt Return Roller

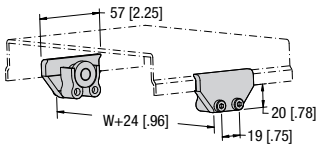

Part Number	Description
240832	Return Roller for Cleated Belt conveyors

Flat Belt Return Roller for 203 to 1,219mm Wide Conveyors

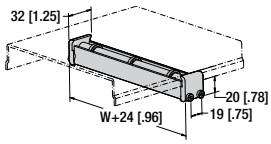

Part Number	Description
3249WW	Return Roller for 3200 Series 203 to 1,219 mm (8 to 48 in) wide Flat Belt Conveyor

Flat Belt Return Roller for 44 to 152 mm Wide Conveyors

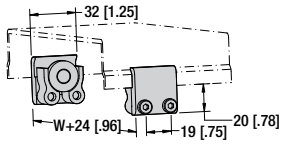

Part Number	Description
240830	Return Roller for 44 to 152 mm (2 to 6 in) wide Flat Belt conveyors

Note: Dimensions = mm (in)

Note: Due to the wide variety of conveyor and stand options along with possible configurations, stability of the final setup is the responsibility of the end user.

Note: Due to the wide variety of conveyor and stand options along with possible configurations, stability of the final setup is the responsibility of the end user.

Adjustable Lane Guiding

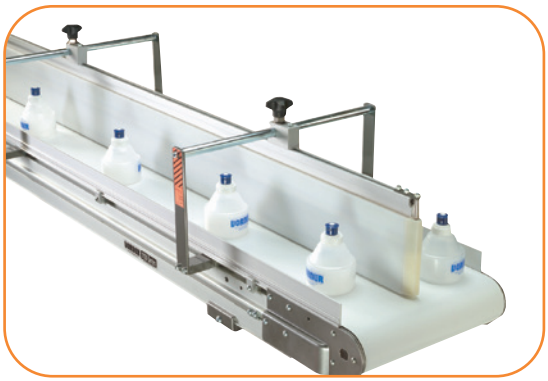

Specifications

- UHMW guide surface on an anodized aluminum mounting rail
- Painted steel mounting hardware
- Available in standard 305 mm (1 ft) increments or can be ordered to any length
- 127 mm (5 in) maximum, 7 mm (0.25 in) minimum part height
- 6 mm (0.25 in) minimum lane width
- Package includes one lane guide, mounting hardware and adjusting knobs
- For conveyors up to 610 mm (24 in) wide – Consult factory for wider lane guide availability
- Compatible with standard Dorner bolt-on profiles
- Easily adjusts for quick product changeover
- Attach additional guides to create multiple lanes
- Create lanes, plows, merges and transfers
- Order additional lane kits separately

3200 SERIES: ADJUSTABLE LANE GUIDING

27M GGG - 06 LL

- **Conveyor Length Reference**
- **Conveyor Width Reference**
- **Guide Type:**
  - **500** = 3200 Package (Belted)
  - **502** = Additional Lane Guide
  - **50H** = Basic Single Curve and Straights
  - **50R** = Heavy Duty Curve
- **27** = Belted, **57** = Modular Belt

Example: 27M500-0620

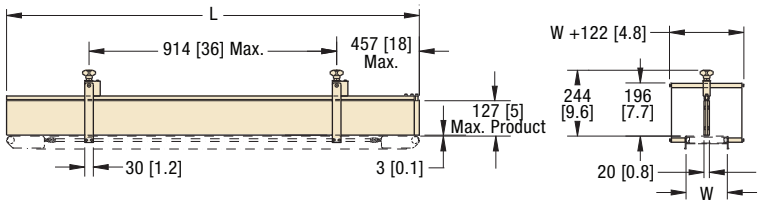

Important: Exceeding 127 mm (5 in) product height will produce a pinch point.

Pulley Transfer Plate (3200 Belted Conveyor Only)

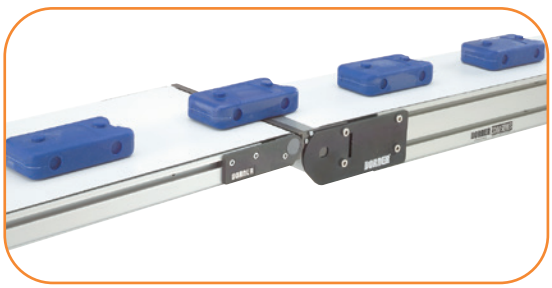

Specifications

- 32 mm (1.25 in) diameter minimum product transfer for 3200 Series
- Hard coat anodized finish
- Package includes extruded aluminum transfer plate, required pulley tail plates and mounting hardware

3200 SERIES: PULLEY TRANSFER PLATE

27M CCCC - 06

- **Conveyor Width Reference**
- **Conveyor Type**
  - **3300** = 3200 Drive Tail
  - **3301** = 3200 Idler 76 mm (3 in) Tail
  - **3302** = 3200 Tensioning Drive Tail
  - **3303** = 3200 Idler Nosebar Tail

Example: 27M3300-06

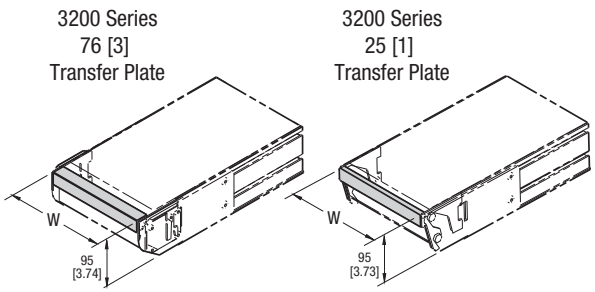

Note: Dimensions = mm (in)

* Not compatible with clipper splice or high friction belts

Due to the wide variety of drive set ups and applications, point of installation guarding is the responsibility of the end user.

90° Adjustable Transfer (3200 Belted Conveyor Only)

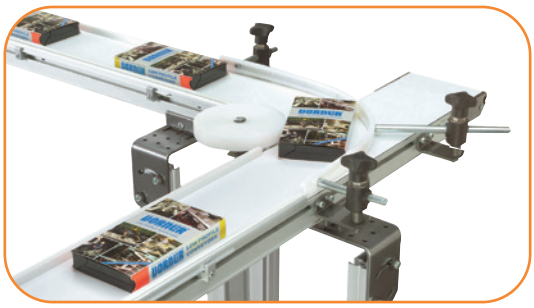

Specifications

- For conveyors up to 305 mm (12 in) wide
- Requires low side conveyors
- 6 mm (0.25 in) minimum part thickness
- Hard coat anodized transfer plate
- Painted steel mounting hardware
- 1,219 mm (48 in) long UHMW outside turn guide, customer can trim to fit
- Maximum recommended part weight is 9 kg (20 lbs) at 15 m/min (50 ft/min) belt speed – Consult factory regarding applications for higher product weights or faster belt speeds.
- 32 mm (1.25 in) minimum product size for 3200 Series
- Package includes outside turn guide, guide wheel, adjustable mounting hardware and extruded aluminum transfer plate
- Pre-engineered guided turns adjust to a variety of products
- Accepts standard Dorner bolt-on profiles outside of transfer area
- Place adjusting rods where required
- Easily adjusts for quick product changeover

3200 Series: 90° Adjustable Transfer

27M TTTT - 06

- **Infeed Conveyor Width Reference**
- **Transfer Type:**
  - **3330** = 3200 Drive Tail
  - **3331** = 3200 Idler 76 mm (3 in) Tail
  - **3332** = 3200 Tensioning Drive Tail
  - **3333** = 3200 Idler Nosebar Tail

Example: 27M3230-06

Note: Due to the wide variety of drive setups and applications point of installation guarding is the responsibility of the end user.

Important: Do not use with 03, 08, 55, 62, or 64 High Friction Belts on Infeed conveyor

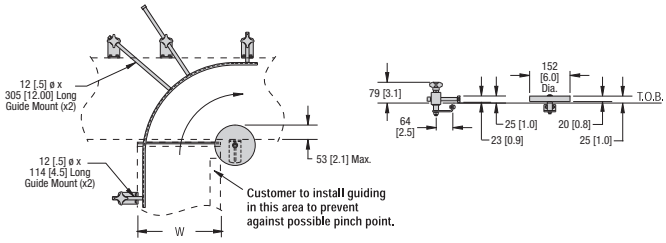

W = Conveyor Belt Width

T-Slot Hardware Accessories

Spring T-Nut

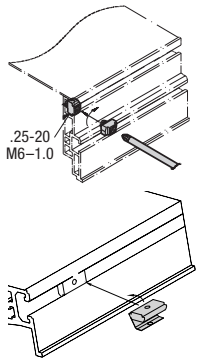

- Mounts in T-slots to attach light weight accessories
- Recommended for vertical aluminum stand T-slots
- Retains position in T-slot

Part Number	Description
207433	Spring T-nuts, 0.25 - 20
205506	Spring T-nuts, M6 - 1.0
200300	Package of 5 Spring T-nuts, 0.25 - 20
200300M	Package of 5 Spring T-nuts, M6 - 1.0
205504	M4 x 0.7 Spring Nut
205505	M5 x 0.8 Spring Nut
205506	M6 x 1.0 Spring Nut
205508	M8 x 1.25 Spring Nut

T-Slot Extenders

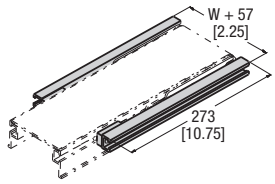

- Provides additional T-slots to the end of conveyor
- Includes mounting brackets and hardware
- Metric fasteners

Part Number	Description
307000M	T-Slot Extender, Pair

3200 & Z-Frame Series T-Bars

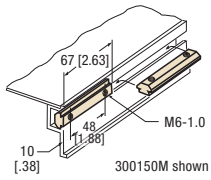

- Mounts in T-slots to attach heavy accessories
- 67 mm (2.63 in) long 2 hole model, 19 mm (0.75 in) 1 hole model

Part Number	Description
639971	1 hole T-bar, 0.25 - 20
639971M	1 hole T-bar, M6 - 1.0
300150	2 hole T-bar, 0.25 - 20
300150M	2 hole T-bar, M6 - 1.0

Note: Dimensions = mm (in)

Side Tables

Specifications

- Provides a 152 mm (6 in) or 305 mm (12 in) wide working surface
- Adjusts in/out and up/down (6 mm [0.25in] max above bedplate) for product transfer on/off conveyor belts
- Can be positioned anywhere along the conveyor
- Anodized aluminum work surface
- Max load: 6 kg/m (5 lbs/ft), use Adjustable Tie Brackets for added capacity
- Available in 305 mm (1 ft) increments from 305 mm to 30,175 mm (1 to 99 ft)

3200 Series: Side Tables

27M TTT - 06 LLLL

- **Table Length** ex. 0200 = 610 mm (2 ft)
- **Table Width: 06 =** 1829 mm (6 ft)
  12 = 3658 mm (12 ft)
- **Conveyor / Table Type:**
  601 = 3200, one side
  602 = 3200, two sides

Example: 27M601-060200

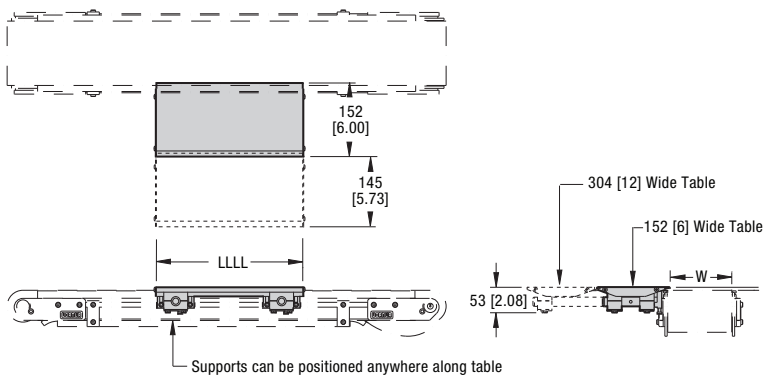

LLLL = 03. to 30.1 m [1 to 99 ft] (Maximum 2.4 m [8 ft] length single piece)

Side Guides (3200 Belted Conveyor Only)

Flared Side Guide

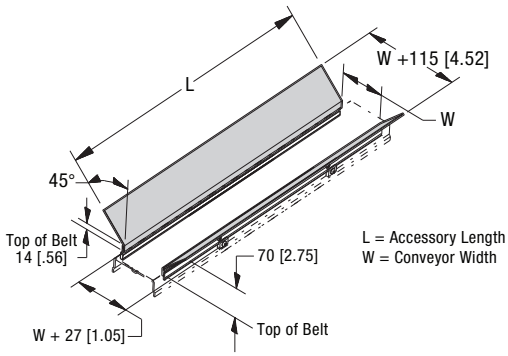

- Guides parts onto conveyor belt surface
- Includes metric mounting hardware

Part Number	Description
280802M	610 mm (2 ft) Flared Side
280803M	914 mm (3 ft) Flared Side
280804M	1,219 mm (4 ft) Flared Side
280805M	1,524 mm (5 ft) Flared Side
280806M	1,829 mm (6 ft) Flared Side

Note: Dimensions = mm (in)

Z-Frame Chutes (3200 Belted Conveyor Only)

Z-Frame Horizontal Infeed Chute

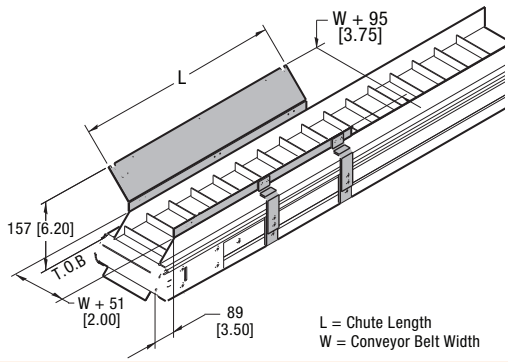

For Standard Cleated Belt Conveyors	
Part Number	Description
38M501	305 mm (1 ft) Infeed chute, Standard Cleated, for 610 mm (2 ft) long section
38M502	610 mm (2 ft) Infeed chute, Standard Cleated, for 914 mm (3 ft) long section
38M503	914 mm (3 ft) Infeed chute, Standard Cleated, for 1,219 mm (4 ft) long section
38M504	1,219 mm (4 ft) Infeed chute, Standard Cleated, for 1,524 mm (5 ft) long section

For Sidewall Cleated Belt Conveyors	
Part Number	Description
38M601	305 mm (1 ft) Infeed chute, Sidewall Cleated, for 610 mm (2 ft) long section
38M602	610 mm (2 ft) Infeed chute, Sidewall Cleated, for 914 mm (3 ft) long section
38M603	914 mm (3 ft) Infeed chute, Sidewall Cleated, for 1,219 mm (4 ft) long section
38M604	1,219 mm (4 ft) Infeed chute, Sidewall Cleated, for 1,524 mm (5 ft) long section

Z-Frame Backstop for Horizontal Infeed Chute

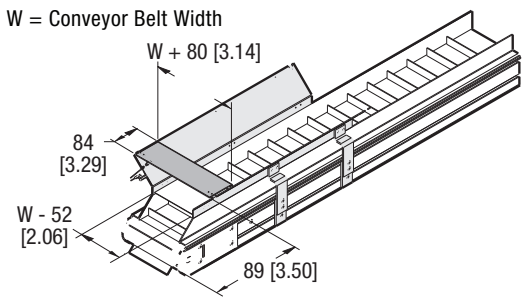

For Standard Cleated Belt Conveyors	
Part Number	Description
38M108	Backstop, Standard Cleated, 08 conveyor width reference
38M112	Backstop, Standard Cleated, 12 conveyor width reference
38M118	Backstop, Standard Cleated, 18 conveyor width reference
38M124	Backstop, Standard Cleated, 24 conveyor width reference

For Sidewall Cleated Belt Conveyors	
Part Number	Description
38M408	Backstop, Sidewall Cleated, 08 conveyor width reference
38M412	Backstop, Sidewall Cleated, 12 conveyor width reference
38M418	Backstop, Sidewall Cleated, 18 conveyor width reference
38M424	Backstop, Sidewall Cleated, 24 conveyor width reference

Stops

Adjustable Stop*

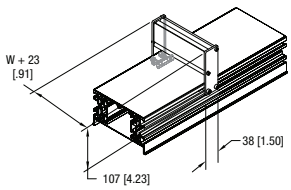

- Slides up and down T-slot length
- Includes mounting hardware

Type	Part Number	Description
	3076WWM	Adjustable Stop
Modular Belt		
T-Slot	350974-WW	Single Curve & Straights
Smart Slot	350976-WW	Single Curve & Straights
T-Slot	350975-WW	Heavy Duty Curve
Smart Slot	350977-WW	Heavy Duty Curve

3200 Series End Stop*

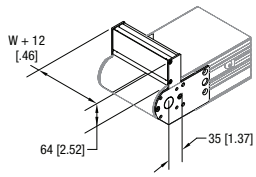

- Includes mounting hardware

Type	Part Number	Description
Modular Belt		
End Stop	350716-WW	Single Curve & Straights
End Stop	350715-WW	Heavy Duty Curve
Belted		
End Stop	350712-WW	Idler End
End Stop	350713-WW	Driver End
End Stop	350714-WW	Tensioning Drive End

WW = Conveyor Width Reference ** Not compatible with high friction belts*

Brackets

Adjustable Height Bracket ‡

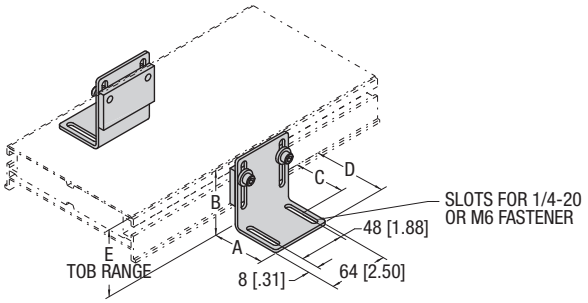

- Provides height adjustment
- (2) Height Ranges
- Includes mounting hadrware

Part Number	Description	A	B	C	D	E
201557	51 x 76 mm (2 x 3 in) Bracket	2 (51)	3 (76)	1.4 (36)	2.4 (61)	97 to 135 (3.83 to 5.33)
201558	76 x 127 mm (3 x 5 in) Bracket	3 (76)	5 (127)	2 (51)	3.4 (86)	133 to 184 (5.23 7.23)

Table Top Mounting Bracket ‡

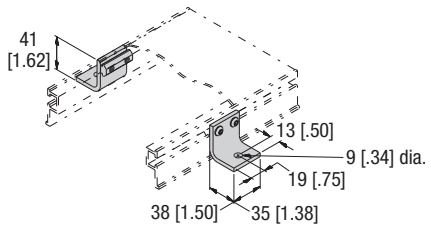

- Includes metric mounting hardware

Part Number	Description
200349M	Table top bracket

‡ = If the discharge end of conveyor is mounted over a table or similar structure, the customer must provide guiding to prevent against possible pinch point.

Frame Mount Casters (3200 Belted Conveyor Only)

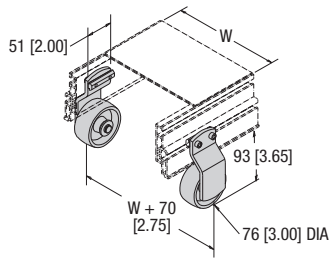

- Includes metric mounting hardware

Part Number	Description
390207	Frame mount casters, pair

Floor Mount Brackets

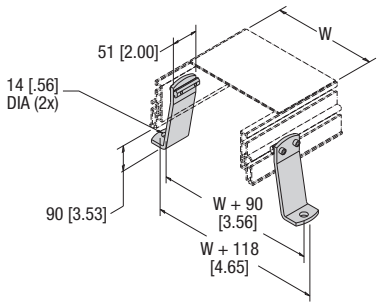

- Includes metric mounting hardware

Part Number	Description
390217	Floor mount brackets, pair

WW = Conveyor Width Reference

Note: Dimensions = mm (in)

Note: Due to the wide variety of conveyor and stand options along with possible configurations, stability of the final setup is the responsibility of the end user.

Photo Eye Bracket Kits

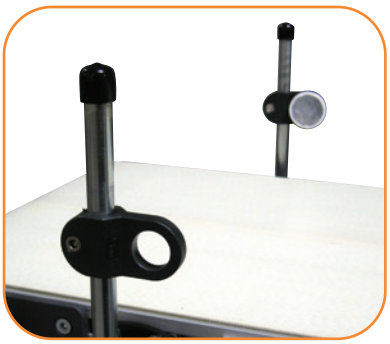

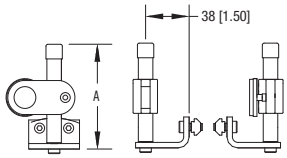

A = 92 [3.61] for 51 [2] Adjustment
168 [6.61] for 127 [5] Adjustment

Specifications

- Standard mounting for 18 mm barrel/nose mount photo-eyes
- Reflective version includes reflector
- Through beam mount version
- Fully adjustable mount for 2200/3200 Series conveyors
- 51 and 127 mm (2 and 5 in) adjustment height ranges

Part Number	Photo Eye Mount Type	Adjustment Height
75M-PM-1	Reflective	51 mm (2 in)
75M-PM-2	Reflective	127 mm (5 in)
75M-PM-3	Through Beam	51 mm (2 in)
75M-PM-4	Through Beam	127 mm (5 in)
75M-PM-5	Convergence	51 mm (2 in)
75M-PM-6	Convergence	127 mm (5 in)

Self Drilling Screws

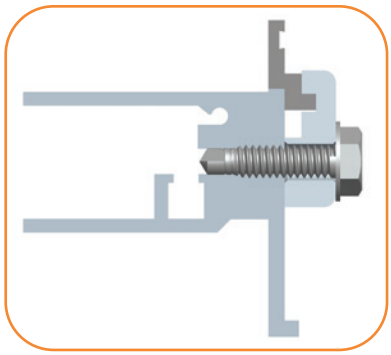

Specifications

- Self drilling in SmartSlot®
- For attachment of heavy accessories or supports
- Package of 10 screws

Part Number	Thickness of Mounting Plate
715652	0 - 3 mm (0 - 1/8 in)
715653	3 - 13 mm (1/8 - 1/2 in)
715654	16 - 25 mm (5/8 - 1 in)

WW = Conveyor Width Reference

T-Slot Covers

T-Slot Cover

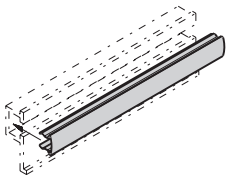

- Snaps into conveyor and aluminum stand T-Slots
- Black plastic extrusion
- Can be trimmed to fit

Part Number	Description
645656P	T-Slot Cover, per 305 mm (1 ft) of length

Mid-Slot Cover

- Snaps into Mid-Slots
- Provides cover for wiring and pneumatic lines
- Flush with side rail

Part Number	Description
350315P	Mid-Slot Cover, per foot

Note: Dimensions = mm (in)

Due to the wide variety of drive set ups and applications, point of installation guarding is the responsibility of the end user.

Regulatory Approvals:

Conveyors:

All Dorner 3200 Series standard conveyors (not including gearmotors and controllers) are CE approved. CE approval follows the provisions of the following directives; Machine Directive 2006/42/EC, EU Low Voltage Directive 2014/30/EU, and EMC Directive 2014/35/EU. All conveyors are marked with the CE symbol on the Dorner serial number tag located on the conveyor frame. Contact the factory for the CE Declaration of Conformity.

All Dorner 3200 Series standard conveyors (not including gearmotors and controllers) are designed and manufactured in accordance with the restrictions defined in the “Restriction of Hazardous Substances” directive, citation 2002/95/EC, commonly known as RoHS. All conveyors are marked with the RoHS symbols on the Dorner serial number tag located on the conveyor frame.

Gearmotors and Controllers:

All Dorner 3200 Series gearmotors and controllers carry one or more of the following approvals. Products are not covered by each approval. Please see the appropriate part number on the Gearmotor and controller charts located in this manual. In addition, regulatory symbols are located on the product information tags located on the product.

CE	CE Marking on a product is a manufacturer's declaration that the product complies with the essential requirements of the relevant European health, safety and environmental protection legislation, in practice by the Product Directives. CE Marking on a product ensures the free movement of the product within the European Union (EU).
RoHS	This directive restricts (with exceptions) the use of six hazardous materials in the manufacture of various types of electronic and electrical equipment. It is closely linked with the Waste Electrical and Electronic Equipment Directive (WEEE) 2002/96/EC which sets collection, recycling and recovery targets for electrical goods and is part of a legislative initiative to solve the problem of huge amounts of toxic e-waste.
	The UL Recognized Component mark is for products intended to be installed in another device, system or end product. This Recognized Component Mark is for the United States only. When a complete product or system containing UL Recognized Components is evaluated, the end-product evaluation process can be streamlined.
c US	The UL Recognized Component mark is for products intended to be installed in another device, system or end product. This Recognized Component Mark is for the United States and Canada. When a complete product or system containing UL Recognized Components is evaluated, the end-product evaluation process can be streamlined.
	CSA International (Canadian Standards Association), is a provider of product testing and certification services for electrical, mechanical, plumbing, gas and a variety of other products. Recognized in the U.S., Canada and around the world, CSA certification marks indicate that a product, process or service has been tested to a Canadian or U.S. standard and it meets the requirements of an applicable CSA standard or another recognized document used as a basis for certification.
c UL US	The UL Listing Mark means UL found that representative product samples met UL's safety requirements. These requirements are primarily based on UL's own published standards for safety. The C-UL-US Mark indicates compliance with both Canadian and U.S. requirements. The products with this type of Mark have been evaluated to Canadian safety requirements and U.S. safety requirements.

Clean Room Certifications:

The 3200 Series Conveyors are often used in clean room applications where the generation of particulates from the conveyor are a concern. In these applications the correct installation and application of the conveyor is critical to the proper running of the conveyor and minimizing the dust generated by the conveyor belt or modular belt. The end user must ensure that the conveyor belts are properly tracked and product accumulation is minimized to providing minimal dust generation.

All of the 3200 Series products are designed and constructed to be used in clean room environments. The following 3200 Series products have gone through third party testing and certification and are certified for use in ISO Standard 14644-1 Class 5 and Federal Standard 209 Class 100 Clean Room applications.

3200 Series Belted Conveyor

3200 Series Precision Move Conveyor

Contact the factory for copy of the certification.

Materials and Chemical Resistance:

Conveyor Frames, Plastics and Modular Belting	
The following is a list of base materials used in the 3200 Series conveyor:	
Material	**Conveyor Component**
Acetal Copolymer, POM	Modular Belts, molded bearing housings
Polypropylene, PP	Modular Belts
Polyamide, PA	Adjustable Guide Support Brackets
UHMW-PE	Modular Belt Slide Rail, Adjustable Guide Face
Thermoplastic Elastomer, TPE	Modular Belt Friction Insert
Aluminum, anodized (Note: cut ends of aluminum is not anodized)	Conveyor Frame, Support Legs, High Side Guiding, Adjustable Guide Horizontal Post, Adjustable Guide Rail

The materials used in the 3200 Series product can resist many chemicals. However some should be avoided. Avoid the following:

- Acids with PH less than 4
- Bases with PH higher than 9

Resistance to Materials: Conveyor Frames, Plastics and Modular Belting

The following table provides the resistance to materials used in the conveyor to several chemicals. Application testing is recommended to determine long term material durability.

Legend:
1 = Very good resistance | 2 = Good resistance | 3 = Moderate resistance | 4 = Not recommended | X = no data available

Acids	Acetal POM	Polypropylene	Polyamide PA	UHMW-PE	Aluminum
Acetic acid	3	1	4	1	2
Benzoic acid	3	1	4	1	4
Boric acid	3	1	2	1	2
Citric acid	3	1	2	1	2
Chromic acid	4	1	4	1	3
Hydrofluoric acid	4	1	4	1	4
Hydrochloric acid	4	1	4	1	3
Hydro cyanic acid	4	X	4	1	1
Nitric acid	4	1	4	1	3
Oleic acid	3	1	2	1	1
Oxalic acid	4	1	2	1	1
Phosphoric acid	4	1	4	1	3
Sulphuric acid	4	2	4	1	3
Tartaric acid	3	1	2	1	1
Basic Compounds	**Acetal POM**	**Polypropylene**	**Polyamide PA**	**UHMW-PE**	**Aluminum**
Ammonia	1	1	2	1	2
Calcium hydroxide	1	X	2	1	4
Caustic soda	1	X	2	1	3
Potassium hydroxide	1	1	2	1	4

Resistance to Materials: Conveyor Frames, Plastics and Modular Belting *(continued)*

Legend:
1 = Very good resistance | 2 = Good resistance | 3 = Moderate resistance |
4 = Not recommended | X = no data available

Salts	Acetal POM	Polypropylene	Polyamide PA	UHMW-PE	Aluminum
Potassium bicarbonate	2	X	2	1	1
Potassium permanganate	2	2	4	1	1
Sodium cyanic	2	X	2	1	4
Sodium hydrochloride	3	X	4	1	4
Acid salt	2	X	3	1	X
Basic salt	1	X	2	1	X
Neutral salt	1	X	2	1	X
Organic Compounds	**Acetal POM**	**Polypropylene**	**Polyamide PA**	**UHMW-PE**	**Aluminum**
Acetone	1	1	1	1	1
Aniline	2	1	3	1	1
Benzene	1	3	2	4	1
Benzine	2	X	2	3	1
Butyl alcohol	2	X	2	1	1
Carbon disulphide	1	3	2	3	1
Carbon tetrachloride	1	3	1	3	2
Chloroform	1	4	3	4	X
Ethyl acetate	1	1	2	1	1
Ethyl alcohol	1	X	2	1	1
Heptane	2	1	1	2	X
Methyl alcohol	1	X	2	1	2
Methyl ethyl ketone	1	2	1	2	2
Nitrobenzene	2	2	2	1	1
Phenol	3	1	4	1	1
Gases	**Acetal POM**	**Polypropylene**	**Polyamide PA**	**UHMW-PE**	**Aluminum**
Carbon dioxide	3	1	1	1	1
Carbon monoxide	2	X	1	1	1
Chlorine	2	4	4	3	1
Hydrogen Sulfide	3	1	1	1	1
Sulphur dioxide	2	1	3	1	1
Other	**Acetal POM**	**Polypropylene**	**Polyamide PA**	**UHMW-PE**	**Aluminum**
Carbon tetrachloride	1	3	1	3	2
Beer	1	1	2	1	1
Fruit juice	1	2	2	1	2
Gasoline	1	1	2	1	1
Milk	1	1	1	1	1
Oil	1	3	1	1	1
Vinegar	1	1	2	1	1

Belting:

The following is a list of the top coat materials used in 3200 Series conveyor belting:

Material	Belt Number
Urethane	01,02,03,05,06,09,54,55,56,53,60,61,63,68,69
PVC (non FDA approved)	08,18,59,64
Silicone	50
Polyester	66
Nitrile	57
Urethane (hard)	58

Resistance to Materials: Belting

The following table provides the resistance to belt materials used in the conveyor to several chemicals. Application testing is recommended to determine long term material durability.

Legend:
1 = Good resistance | 3 = Limited resistance | 4 = Not recommended

Materials	Urethane	PVC (non FDA)	Silicone	Polyester	Urethane (hard)
Chemicals					
Acetic acid (glacial acetic acid)	4	3	1	1	4
Acetic acid 10 %	3	1	1	3	1
Acetic anhydride	3	4	1	1	4
Acetone	4	4	1	3	4
Aluminium salts	1	1	1	1	1
Alum	1	1	1	1	1
Ammonia, aqueous	3	1	1	3	1
Ammonia, gaseous	1	1	3	1	1
Ammonium acetate	1	1	1	1	1
Ammonium carbonate	1	1	1	1	1
Ammonium chloride	1	1	1	1	1
Ammonium nitrate	1	1	1	1	1
Ammonium phosphate	1	1	1	1	1
Ammonium sulphate	1	1	1	1	1
Amyl alcohol	1	4	3	1	1
Aniline	3	3	3	4	4
Barium salts	1	1	1	1	1
Benzaldehyde	4	4	4	4	4
Benzine (see also Motor fuels)	1	3	3	1	1
Benzoic acid	1	1	1	1	1
Benzol	3	4	4	3	3
Boric acid	1	1	1	1	1
Boric acid, solution	1	1	1	1	1
Bromine	4	4	4	4	4
Bromine water	4	3	1	4	3
Butane, gaseous	1	1	1	1	1
Butane, liquid	1	1	1	1	1
Butyl acetate	4	4	4	3	4
n-Butyl alcohol	1	3	1	1	1
Calcium chloride	1	1	1	1	1

Resistance to Materials: Belting *(continued)*

Legend:
1 = Good resistance | 3 = Limited resistance | 4 = Not recommended

Materials	Urethane	PVC (non FDA)	Silicone	Polyester	Urethane (hard)
Calcium nitrate	1	1	1	1	1
Calcium sulphate	1	1	1	1	1
Carbon disulphide	4	4	3	4	4
Carbon tetrachloride	3	4	4	4	3
Chlorine, liquid	4	4	4	4	4
Chlorine, gaseous, dry	4	4	4	4	4
Chlorine, gaseous, wet	4	4	4	4	4
Chlorine water	4	1	3	4	3
Chlorobenzene	4	4	4	4	4
Chloroform	4	4	4	4	4
Chlorosulphonic acid	4	4	4	4	4
Chromic acid	4	4	4	4	4
Chromium salts	1	1	1	1	1
Chromium trioxide	1	1	1	1	1
Citric acid	4	1	1	1	4
Copper salts	1	1	1	1	3
Cresols	3	3	3	4	3
Cresols, aqueous	3	3	3	3	3
Cyclohexane	4	4	4	1	4
Cyclohexanol	4	4	4	4	4
Cyclohexanone	4	4	4	4	4
Decahydronaphthalene	4	4	4	4	4
Dibutyl phthalate	3	4	1	4	4
Diethyl ether	4	4	4	4	4
Dimethyl formamide	4	4	3	4	4
1.4 Dioxan	4	4	3	4	4
Ether	4	4	4	4	4
Ethyl acetate	4	4	4	3	4
Ethyl alcohol, non-denatured 100%	1	3	3	1	1
Ethyl alcohol, non-denatured 96%	1	3	3	1	1
Ethyl alcohol, non-denatured 50%	1	3	3	1	1
Ethyl alcohol, non-denatured 10%	1	3	1	1	1
Ethyl benzene	4	4	4	4	4
Ethyl chloride	4	4	4	4	4
Ethylene chloride	4	4	4	4	4
2-Ethyl hexanol	1	3	1	1	1
Formaldehyde	1	3	1	3	1
Formic acid, dilute	4	1	1	3	3
Glycerine	1	1	1	1	1
Glycerine, aqueous	1	1	1	1	1
Glycol	1	3	1	1	1
Glycol, aqueous	1	1	1	1	1
Heptane	1	3	3	1	1
Hexane	1	3	3	1	1
Hydrochloric acid, conc.	3	1	4	3	1

Resistance to Materials: Belting *(continued)*

Legend:
1 = Good resistance | 3 = Limited resistance | 4 = Not recommended

Materials	Urethane	PVC (non FDA)	Silicone	Polyester	Urethane (hard)
Hydrochloric acid 10 %	3	1	1	1	1
Hydrofluoric acid 40 %	4	4	4	4	4
Hydrogen chloride, gaseous, dilute	3	1	3	3	1
Hydrogen chloride, gaseous, conc.	3	3	3	4	3
Hydrogen peroxide 10%	3	1	1	3	1
Hydrogen sulphide	3	3	3	3	3
Iron salts (sulphate)	1	1	1	1	1
Isooctane	1	3	3	1	1
Isopropyl alcohol	1	3	1	1	1
Lactic acid	1	3	1	1	1
Magnesium salts	1	1	1	1	1
Mercury	1	1	1	1	1
Mercury salts	1	1	1	1	1
Methyl alcohol, aqueous 50 %	3	3	1	1	1
Methyl alcohol (methanol)	1	3	1	1	1
Methyl ethyl ketone	4	4	1	3	4
Methylene chloride	4	4	4	4	4
Naphthalene	3	4	4	3	4
Nickel salts	1	1	1	1	1
Nitric acid	4	3	4	4	4
Nitrobenzene	4	4	1	3	4
Octane (see also isooctane)	1	3	4	1	1
Oleic acid	1	3	4	1	1
Oxalic acid	1	1	1	1	1
Ozone	1	3	3	1	3
Perchloroethylene	4	4	4	4	4
Phenol	3	3	1	4	3
Phenol, aqueous	4	3	1	4	3
Phosphoric acid 85 %	4	1	1	3	1
Phosphoric acid 50 %	1	1	1	1	1
Phosphoric acid 10 %	1	1	1	1	1
Phosphorus pentoxide	1	1	1	1	1
Potash lye 50 %	4	1	4	3	4
Potash lye 25 %	4	1	4	1	4
Potash lye 10 %	4	1	3	1	4
Potassium carbonate (potash)	1	1	1	1	1
Potassium chlorate	1	1	1	1	1
Potassium chloride	1	1	1	1	1
Potassium dichromate	1	1	1	1	1
Potassium iodide	1	1	1	1	1
Potassium nitrate	1	1	1	1	1
Potassium permanganate	1	1	1	1	1
Potassium persulphate	1	1	1	1	1
Potassium sulphate	1	1	1	1	1
Propane, gaseous	1	1	1	1	1
Propane, liquid	1	1	1	1	1

Resistance to Materials: Belting *(continued)*

Legend:
1 = Good resistance | 3 = Limited resistance | 4 = Not recommended

Materials	Urethane	PVC (non FDA)	Silicone	Polyester	Urethane (hard)
Pyridine	4	4	3	4	4
Silver salts	1	1	1	1	1
Soda lye 50% (see potash lye)	4	1	4	4	4
Soda lye 25%	4	1	4	3	4
Soda lye 10%	4	1	3	1	4
Sodium bisulphite	1	1	1	1	1
Sodium carbonate (natron)	1	1	1	1	1
Sodium carbonate (soda)	1	1	1	1	1
Sodium chlorate	1	1	1	1	1
Sodium chloride (common salt)	1	1	1	1	1
Sodium hydroxide (caustic soda)	4	1	4	1	4
Sodium hypochlorite	1	1	1	3	1
Sodium nitrate	1	1	1	1	1
Sodium nitrite	1	1	1	1	1
Sodium perborate	1	1	1	1	1
Sodium phosphate	1	1	1	1	1
Sodium sulphate (Glauber salt)	1	1	1	1	1
Sodium sulphide	1	1	1	1	1
Sodium sulphite	1	1	1	1	1
Sodium thiosulphate (fixing salt)	1	1	1	1	1
Stearic acid	1	1	1	1	1
Succinic acid	1	1	1	1	1
Sulphur	1	1	1	1	1
Sulphur dioxide	3	3	3	3	4
Sulphuric acid 96%	4	4	4	4	4
Sulphuric acid 50%	4	3	4	3	4
Sulphuric acid 25%	4	3	3	1	3
Sulphuric acid 10%	4	3	1	1	3
Tartaric acids	1	1	1	1	1
Tetrachloroethane	4	4	4	4	4
Tetrachloroethylene (perchloroethylene)	4	4	4	4	4
Tetrahydrofuran	4	4	4	4	4
Tetrahydronaphthalene	4	4	4	4	4
Thiophene	4	4	4	4	4
Tin II chlorides	1	1	1	1	1
Toluene	4	4	4	4	4
Trichloroethylene	4	4	4	4	4
Urea, aqueous	1	1	1	1	1
Water	1	1	1	1	1
Xylene	4	4	4	3	4
Zinc salts	1	1	1	1	1

Resistance to Materials: Belting *(continued)*

Legend:
1 = Good resistance | 3 = Limited resistance | 4 = Not recommended

Materials	Urethane	PVC (non FDA)	Silicone	Polyester	Urethane (hard)
Products					
Alum	1	1	1	1	1
Anti-freeze*	1	3	1	1	1
Aqua regia	4	4	4	4	4
Asphalt	1	3	3	1	1
Battery acid	4	4	4	4	4
Benzine	1	3	3	1	1
Bleaching lye (12.5%)	1	1	1	1	3
Bone oil	1	3	4	1	1
Borax	1	1	1	1	1
Brake fluid* Bosch	1	3	1	1	3
Brake fluid* Skydrol	4	4	3	4	4
Chloride of lime (aqueous suspension)	1	1	1	1	3
Chlorine (active)	4	4	4	4	4
Chrome baths* (technical)	1	3	3	1	1
Chromosulphuric acid	4	4	4	4	4
Cresol solution	3	3	4	4	4
Diesel oil	1	1	3	1	1
Fertilizer salts	1	1	1	1	1
Fixing salt	1	1	1	1	1
Floor wax	1	3	3	1	1
Formalin	1	3	3	1	1
Fuel oils*	1	1	3	1	1
Furniture polish*	1	3	3	1	1
Gypsum	1	1	1	1	1
Ink*	1	1	1	1	1
Linseed oil	1	3	1	1	1
Litex (styrene)	4	4	4	4	4
Mineral oils (non-aromatic)	1	1	1	1	1
Moth balls	3	4	3	3	3
Diesel oil*	1	1	3	1	1
Petrol (gasoline) DIN51635	1	3	3	1	1
Petrol, regular	1	3	3	1	1
Petrol, super	3	4	3	1	3
Motor oils*	1	1	1	1	1
Oil no. 3 (ASTM)	1	3	1	1	1
Oleum	4	4	4	4	4
Paraffin	1	1	1	1	1
Paraffin oil	1	1	1	1	1
Petroleum	1	3	3	1	1
Petroleum ether	1	3	4	1	1
Photographic developer	1	1	1	1	1

Bearings and Lubrication:

All bearings on the 3200 Series conveyor are sealed and lubricated for life. No grease zerk is available and no greasing over the life of the product is required.

All gearmotors used on the 3200 Series conveyor are sealed and may be mounted in any position. Changing gear oil lubrication may be needed over the life of the gearbox. Please check the appropriate gearmotor manual for instructions.

Support Stand Locations:

Support Stand Locations		
Symbol	**Description**	**Value, inches mm (in)**
A	Maximum distance back at drive end	610 (24)
B	Maximum distance back at idler end	914 (36)
C	Maximum distance between supports	3,048 (120)
D	Maximum distance away from frame split	610 (24)

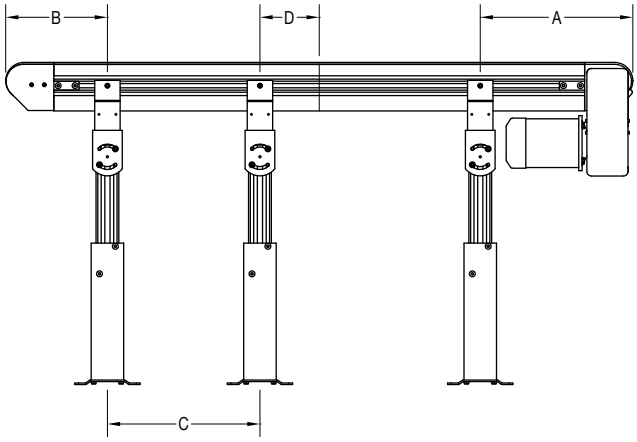

Conveyor Drive Shaft Tolerances:

End Drive, Belted and Modular Belt:

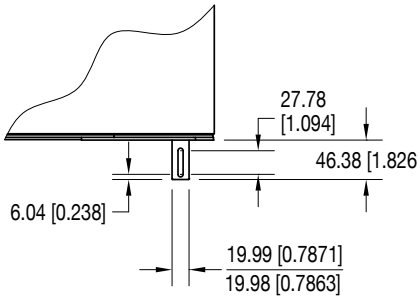

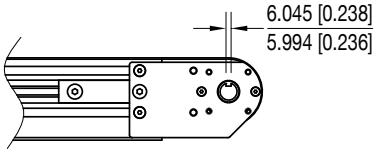

Center Drive:

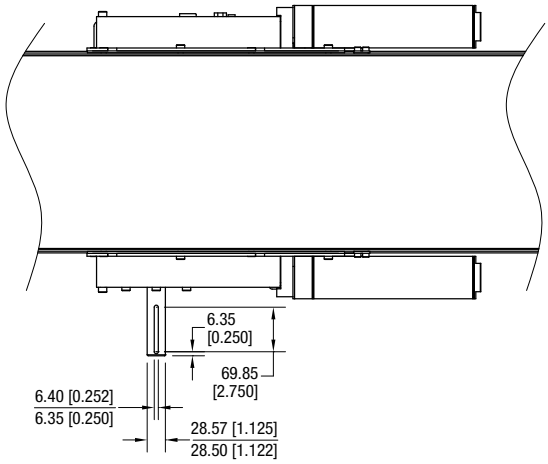

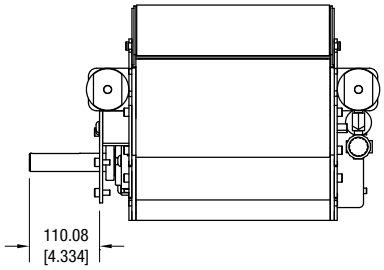

Conveyor Noise Level (Decibel Ratings)

The actual noise level generated by the conveyor depends on several factors; the installation configuration, the product running on the conveyor, the surrounding equipment, the conveyor options and belt speed. The noise level generated by the conveyor is typically less than the general noise level of factory equipment.

Generally a higher belt speed will result in a higher noise level. In addition modular belt conveyors will run slightly louder than belted conveyors. The following charts provide basic decibel ratings for a typical conveyor arrangements.

Belted Conveyors:

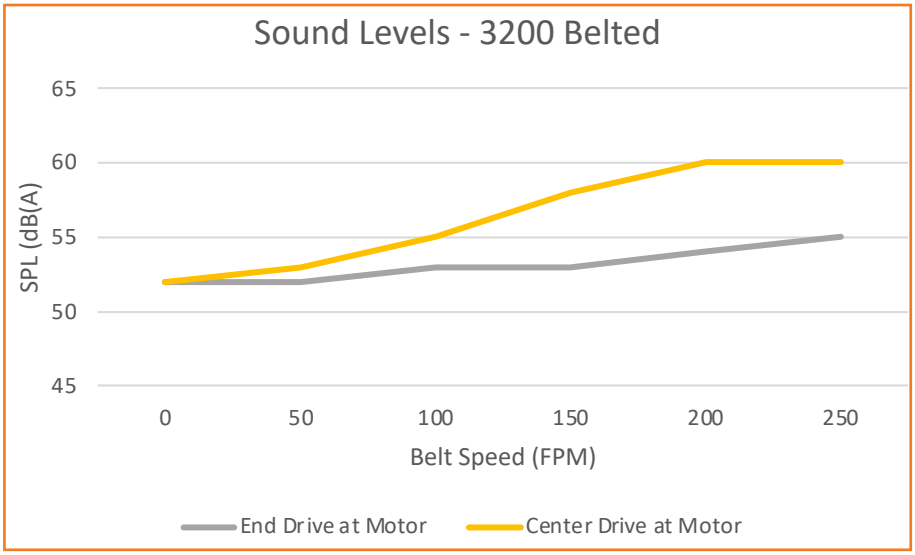

Modular Belt Conveyors:

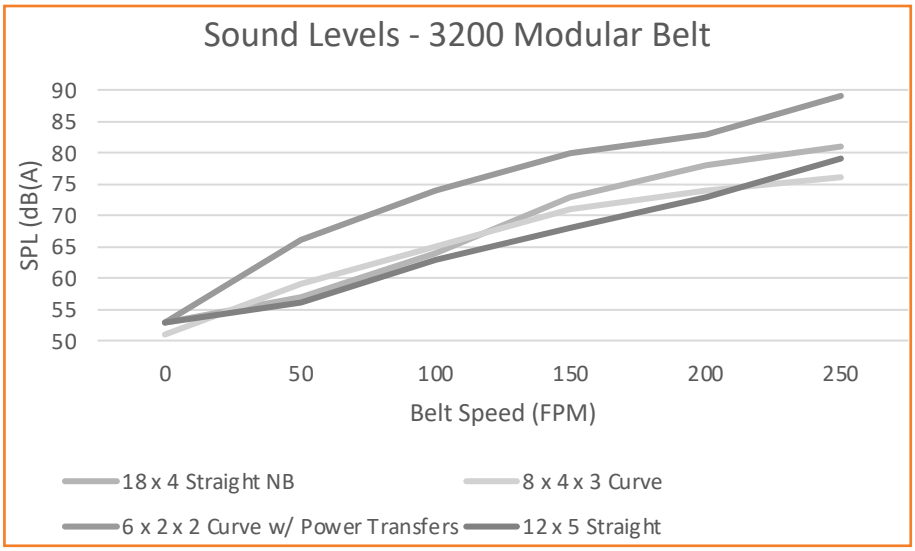

Maximum Load Capacity

The following Load Capacity Charts **do not** take into account the conveyor configuration, length or gearmotor selection. Your specific conveyor may not be capable of the maximum load condition. Please confirm your maximum load per application with the Dorner DTools program at www.dornerconveyors.com.

All load capacities shown are non-accumulated evenly distributed loads.

3200 Series End Drive Belted Conveyor		
Belt Width	**Direction 1, Pulling the Belt**	**Direction 2, Pushing the Belt**
102 mm (4 in) wide	91 kg (200 lbs)	30 kg (66 lbs)
152 mm (6 in) wide	113 kg (250 lbs)	38 kg (83 lbs)
203 mm (8 in) wide	136 kg (300 lbs)	45 kg (99 lbs)
254 to 1219 mm (10 to 48 in) wide	181 kg (400 lbs)	60 kg (132 lbs)

3200 Series Center Drive Belted Conveyor		
Belt Width	**Direction 1, Pulling the Belt**	**Direction 2, Pushing the Belt**
102 mm (4 in) wide	136 kg (300 lbs)	45 kg (99 lbs)
152 mm (6 in) wide	181 kg (400 lbs)	60 kg (132 lbs)
203 mm (8 in) wide	227 kg (500 lbs)	75 kg (165 lbs)
254 mm (10 in) wide	272 kg (600 lbs)	90 kg (198 lbs)
305, 356 and 406 mm (12, 14 and 16 in) wide	318 kg (700 lbs)	105 kg (231 lbs)
457, 508, 559 and 610 mm (18, 20, 22 and 24 in) wide	363 kg (800 lbs)	120 kg (264 lbs)
660 to 1219 mm (26 to 48 in) wide	454 kg (1000 lbs)	150 kg (330 lbs)

3200 Series Straight Modular Belt Conveyor	
Belt Width	**Direction 1, Pulling the Belt**
102 mm (4 in) wide	113 kg (250 lbs)
152 mm (6 in) wide	181 kg (400 lbs)
203 mm (8 in) wide	227 kg (500 lbs)
254 mm (10 in) wide	295 kg (650 lbs)
305 mm (12 in) wide	363 kg (800 lbs)
356 to 1219 mm (14 to 48 in) wide	454 kg (1000 lbs)
660 to 1219 mm (26 to 48 in) wide	454 kg (1000 lbs)

Curve Modular Belt Conveyor	
Belt Width	**Direction 1, Pulling the Belt**
152 mm (6 in) wide	91 kg (200 lbs)
203 mm (8 in) wide	113 kg (250 lbs)
254 mm (10 in) wide	136 kg (300 lbs)
305 mm (12 in) wide	181 kg (400 lbs)
356 to 914 mm (14 to 36 in) wide	227 kg (500 lbs)

Note: Curve conveyor load capacity is very defendant on conveyor configuration and number of curves. Please confirm your maximum load per application with the Dorner DTools program at www.dornerconveyors.com.

No Load Torque

No load torque is the amount of torque required to turn an empty conveyor. The torque value varies by conveyor length and configuration. The following charts provide basic values for an average length conveyor. Your specific conveyor may not have a higher value. Please confirm your no load torque and maximum load per application with the Dorner DTools program at www.dornerconveyors.com.

Belted Conveyor No Load Torque		
Belt Width mm (in)	End Drive mm-kg (in-lbs)	Center Drive m-kb (in-lbs)
102 (4)	392 (7)	6170 (110)
152 (6)	448 (8)	6720 (120)
203 (8)	560 (10)	7280 (130)
254 (10)	728 (13)	7840 (140)
305 (12)	840 (15)	8400 (150)
356 (14)	1120 (20)	8680 (155)
406 (16)	1120 (20)	8680 (155)
203 (18)	1400 (25)	8960 (160)
508 (20)	1512 (27)	9240 (165)
559 (22)	1512 (27)	9520 (170)
610 (24)	1680 (30)	10080 (180)
660 (26)	1848 (33)	10640 (190)
711 (28)	1848 (33)	10640 (190)
762 (30)	1960 (35)	11200 (200)
813 (32)	2128 (38)	11760 (210)
864 (34)	2128 (38)	11760 (210)
914 (36)	2128 (38)	12320 (220)
965 (38)	2240 (40)	12600 (225)
1016 (40)	2240 (40)	12880 (230)
1067 (42)	2240 (40)	12880 (230)
1118 (44)	2240 (40)	13160 (235)
1168 (46)	2240 (40)	13440 (240)
1219 (48)	2240 (40)	13440 (240)

Straight Modular Belt Conveyor:

The no load torque on modular belt straight conveyors is dependent on the conveyor length and width. Use the following formula to determine no load torque. Where:

L = conveyor length (ft)

W = conveyor width (in)

No load torque (in-lbs) = (L)*(2)*(W/12)*(1.7 lb/sq ft)*(0.3 COF)*(2 in pitch)*(1.25)

Example: 3200 Series Straight Modular Belt, 24” wide x 23’ long

No load torque (in-lbs) = (23)*(2)*(24/12)*(1.7 lb/sq ft)*(0.3 COF)*(2 in pitch)*(1.25)

No load torque = 117 in-lbs

Curve Modular Belt Conveyor:

The torque calculations for curve conveyors are complicated and are dependent on the conveyor size and configuration. Please confirm your no load torque and maximum load per application with the Dorner DTools program at www.dornerconveyors.com.

Belting and Coefficient of Friction

The coefficient of friction is used to determine the load a conveyor can carry. It affects a conveyor in two ways: the friction that exists between the conveyor belt and the bed surface, and if accumulating product the friction that exists between the conveyor top surface and the product.

Coefficient of Friction, between the bottom of the conveyor belt and bed surface			
Product	**Surfaces**	**Application Condition**	**Coefficient of Friction**
3200 Series Belted	Impregnated polyester fabric to anodized aluminum bed plate	Dry	0.33
3200 Series Modular Belt	Acetal modular belt to UHMW wear strips	Dry	0.30

Coefficient of Friction, between the top surface of conveyor belt and product:

3200 Series Belted

The following table provides the coefficient of friction between steel product and various belt top surfaces. All factors below are assuming dry conditions.

Belt Number	Top Surface Material and Type	Coefficient of Friction
01, 54, 58, 68	Smooth hard urethane	0.40
02, 59, 60, 61, 66	Smooth medium urethane	0.50
03, 19, 55, 69	Glossy soft urethane	>1.0, do not accumulate
05, 06, 50, 53, 63	Impregnated polyester fabric	0.20
08, 18, 64	PVC, Very High friction	>1.0, do not accumulate

3200 Series Modular Belt

The following table provides the coefficient of friction between acetal modular belt and various products. All factors below are assuming dry conditions.

Product Being Accumulated	Typical Coefficient of Friction
Steel	0.25
Glass	0.20
Aluminum	0.25
Plastic	0.25
Wood	0.30
Paper and Cardboard	0.30

Calculating Conveyor Belt Speed

3200 Series Belted Conveyors:

To calculate the conveyor belt speed you need to know the following factors:

- Drive roller diameter
  - 76.2 mm (3 in) for end drives
  - 1152.4 mm (6 in) for center drives
- Number of teeth of pulley located at drive roller (if equipped)
- Number of teeth of pulley located at gearmotor (if equipped)
- RPM of gearmotor

$$\text{Belt Speed (ft/min)} = (\text{Drive roller diameter}/12)*(3.14)*(\text{RPM of gearmotor})* \frac{(\text{Teeth at gearmotor})}{(\text{Teeth at drive roller})}$$

Example:

3200 Series End Drive with a Bottom mount with a 16 tooth pulley located at the drive roller and a 24 tooth pulley located on the gearmotor. The gearmotor is a 10:1 ratio with 173 rpm output.

Belt Speed (ft/min) = (3/12)*(3.14)*(173)*(24/16)

Belt speed (ft/min) = 204 ft/min

3200 Series Modular Belt Conveyors:

To calculate the conveyor belt speed you need to know the following factors:

- Drive sprocket pitch diameter
  - 99mm (3.9 in) for straight conveyors
  - 99mm (3.9 in) for basic single curve conveyors
  - 123mm (4.83 in) for high strength curve conveyors
- Number of teeth of pulley located at drive roller (if equipped)
- Number of teeth of pulley located at gearmotor (if equipped)
- RPM of gearmotor

$$\text{Belt Speed (ft/min)} = (\text{Drive pitch diameter}/12)*(3.14)*(\text{RPM of gearmotor})* \frac{(\text{Teeth at gearmotor})}{(\text{Teeth at drive roller})}$$

Example:

3200 Series Straight Modular Belt Conveyor with a Bottom mount with a 16 tooth pulley located at the drive roller and a 24 tooth pulley located on the gearmotor. The gearmotor is a 20:1 ratio with 86 rpm output.

Belt Speed (ft/min) = (3.9/12)*(3.14)*(86)*(24/16)

Belt speed (ft/min) = 132 ft/min

Calculating Conveyor Load Capacity

There are several factors that affect the overall conveyor load of the 3200 Series conveyor. These include:

- Conveyor size and configuration
- Conveyor speed
- Application temperature
- Product accumulation
- Number of starts and stops per hour

Located online at www.dornerconveyors.com is the Dorner conveyor configuration tool, DTools. This tool allows you to configure your conveyor layout and determine the maximum load capacity for the conveyor. It is suggested that this program be used to calculate the conveyor load as the calculation is quite complicated. This configuration program however does not take into account temperature, dirty conditions, and conveyor starts and stops. If these conditions are part of your application please use the load reducing factors as shown below.

Maximum Load = (Load from DTools)(Temperature Factor)(Start/Stop Factor)

Temperature Factor

Ambient temperature can negatively affect the capacity of the conveyor.

Temperature F	Temperature C	Temperature Factor
-4	-20	1.0
32	0	1.0
68	20	1.0
104	40	0.9
140	60	0.8

Start / Stop Factor

Frequent Start / Stops of the conveyor can negatively affect the capacity of the conveyor. All start / stop applications must use a soft start mechanism such as a Frequency Inverter with a 1 second acceleration cycle.

Application Condition	Start / Stop Factor
Continuous Run or 1 start/stop per hour	1.0
Maximum 10 starts/stop per hour	0.83
Maximum 30 starts/stop per hour	0.70
Greater than 30 starts/stop per hour	0.62

Industrial & Automation Conveyors

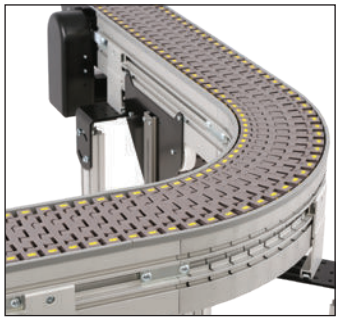
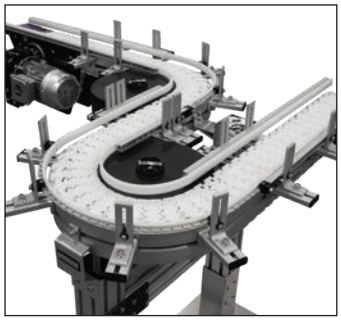
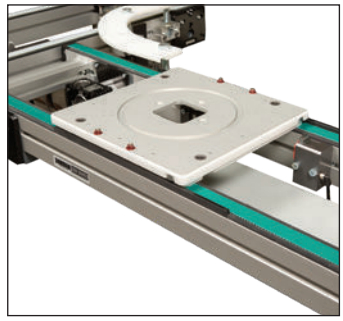

Sanitary Conveyors

Engineered Solutions

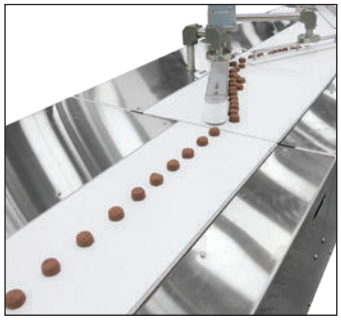
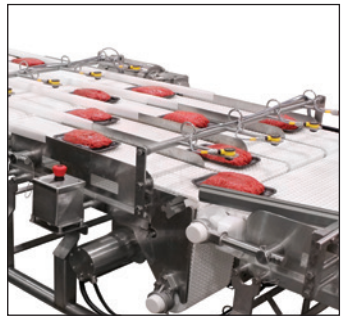

Parts & Service

Online Configurator

Warranty

TRANSFORMING CONVEYOR AUTOMATION

Dorner – North & South America

Dorner Mfg. Corp.
Hartland, WI
USA
+1-262-367-7600
info@dorner.com

Dorner Conveyors Ltd.
Burlington, Ontario
Canada
+1-289-208-7306
info@dorner.com

Dorner Latin America, S. de R.L. de C.V.
Zapopan, Jalisco
Mexico
+52.33.30037400
info.latinamerica@dorner.com

Dorner – Europe

Dorner GmbH
Jülich
Germany
+49 (0) 2461/93767-0
info.europe@dorner.com

Dorner SARL
Velizy-Villacoublay
France
+33 (0)1 84 73 24 27
info.france@dorner.com

Dorner – Asia

Dorner (M) Sdn. Bhd.
Penang
Malaysia
+604-626-2948
info.asia@dorner.com

DORNER®
By Columbus McKinnon

dornerconveyors.com

© Dorner Mfg. Corp. 2023. All Rights Reserved.
851-772 REV D 0723