Installation, Maintenance & Parts Manual

2200 Series End Drive Conveyors

Table of Contents

Warnings – General Safety 2
Introduction 2
Product Description 3
Specifications 3
Installation 4
RequiredTools 4
Recommended Installation Sequence 5
Conveyors Up to 13 ft (3962 mm) 5
Conveyors Longer Than 13 ft (3962 mm) 5
Mounting Brackets 6
Return Rollers 7
Cleated Belt and 2 – 6¨ (51 – 152 mm) Wide Flat Belt Conveyors 7
8 – 24¨ (203 – 610 mm) Wide Flat Belt Conveyors 7
Preventative Maintenance & Adjustment 8
Required Tools 8
Standard Tools 8
Special Tools 8
Checklist 8
Lubrication 8
Maintaining Conveyor Belt 8
Troubleshooting 8
Cleaning 8
Conveyor Belt Replacement 8
Conveyor Belt Replacement Sequence 8
Belt Removal for Conveyor Without Stands or Gearmotor Mounting Package 9
Belt Removal for Conveyor With Stands and Gearmotor Mounting Package 9
Belt Installation for Conveyor Without Stands or Gearmotor Mounting Package 10
Belt Installation for Conveyor With Stands and Gearmotor Mounting Package 10
Conveyor Belt Tensioning 11
Conveyors with 1.25¨ (32 mm) Diameter Pulleys 11
Conveyors with Nose Bar Idlers 12
Conveyor Belt Tracking 12
V–Guided Belts 12
Non V–Guided Belts 12
Pulley Removal 13
A – Idler Pulley Removal 13
B – Drive Pulley Removal 14
Bearing Removal & Replacement 15
Pulley Replacement 15
Drive Pulley 15
Idler Pulley 17
Nose Bar Bearing Replacement 18
Service Parts 21
2” (51mm) Wide Conveyor Assembly 21
3” (76mm) to 6” (152mm) Wide Conveyor Assembly . . . 23
8” (203mm) to 12” (305mm) Wide Conveyor Assembly . 24
18” (457mm) to 24” (610mm) Wide Conveyor Assembly 26
Nosebar End Assembly 2” (51mm) to 24” (610mm) 28
–04 3” (76mm) Aluminum Side 29
–05 1.5” (38mm) Aluminum Side 30
–07 Low to Side Wiper 31
–09 Low to High Side 32
–10 .5” (13mm) Extruded Plastic 33
–13 Adjustable Guiding 34
.5” (13mm) Cleated Guiding 35
1” (25mm) Cleated Guiding 36
2” (51mm) Cleated Guiding 37
Flared Side Guiding 38
Flat Belt Mounting Bracket 39
Cleated Belt Mounting Bracket 39
Flat Belt Mounting Brackets for 2’ (610mm) Conveyors 40
Cleated Belt Mounting Brackets for 2’ (610mm) Conveyors 40
Connecting Assembly without Stand Mount 41
Flat Belt Connecting Assembly without Stand Mount 41
Cleated Belt Connecting Assembly without Stand Mount 42
2” (51mm) to 6” (152mm) Flat Belt Return Roller 42
8” (203mm) to 24” (610mm) Flat Belt Return Roller 43
Cleated Belt Return Roller 43
Conveyor Belt Part Number Configuration 44
Return Policy 46

Warnings – General Safety

WARNING

The safety alert symbol, black triangle with white exclamation, is used to alert you to potential personal injury hazards.

DANGER

Climbing, sitting, walking or riding on conveyor will cause severe injury.

KEEP OFF CONVEYORS.

DANGER

DO NOT OPERATE CONVEYORS IN AN EXPLOSIVE ENVIRONMENT.

WARNING

Exposed moving parts can cause severe injury.

LOCK OUT POWER before removing guards or performing maintenance.

WARNING

Gearmotors may be HOT.

DO NOT TOUCH Gearmotors.

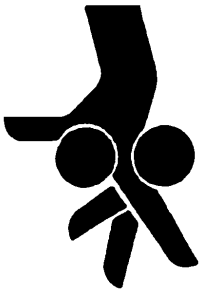

WARNING

Dorner cannot control the physical installation and application of conveyors. Taking protective measures is the responsibility of the user.

When conveyors are used in conjunction with other equipment or as part of a multiple conveyor system, CHECK FOR POTENTIAL PINCH POINTS and other mechanical hazards before system start-up.

WARNING

Loosening stand height or angle adjustment screws may cause conveyor sections to drop down, causing severe injury.

SUPPORT CONVEYOR SECTIONS PRIOR TO LOOSENING STAND HEIGHT OR ANGLE ADJUSTMENT SCREWS.

Introduction

IMPORTANT: Some illustrations may show guards removed. DO NOT operate equipment without guards.

Upon receipt of shipment:

- Compare shipment with packing slip. Contact factory regarding discrepancies.
- Inspect packages for shipping damage. Contact carrier regarding damage.
- Accessories may be shipped loose. See accessory instructions for installation.

Dorner's Limited Warranty applies.

Dorner 2200 series conveyors are covered by Patent Numbers 5,174,435, 6,298,981, 6,422,382 and corresponding patents and patent applications in other countries.

Dorner reserves the right to make changes at any time without notice or obligation.

Product Description

Refer to Figure 1 for typical conveyor components.

Typical Components	
A	Conveyor
B	Gearmotor Mounting Package
C	Gearmotor
D	Guiding & Accessories
E	Mounting Brackets
F	Return Rollers
G	Support Stand
H	Variable Speed Controller
I	Drive End
J	Idler/Tension End

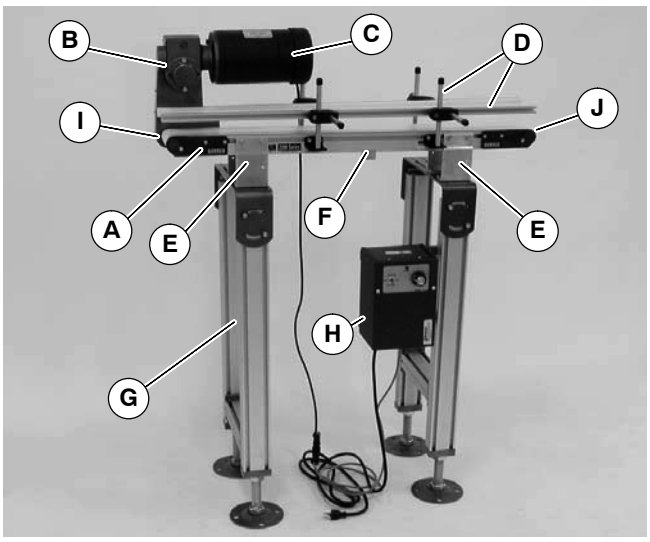

Figure 1

Specifications

Models:

Flat Belt 2200 Series Conveyor

2 1 0 M WW LLLL A PP BB

- BB — Belt Type*
- PP — Conveyor Profile*
- A — Output Shaft Position*
- LLLL — Conveyor Length Reference
- WW — Conveyor Width Reference
- M — Document Language, M = English
- 1 — 1 = Flat belt with tracking cams (non V-guided belt)
  2 = Flat belt with V-guide tracking
  3 = Nose bar transfer at tension end (non V-guided belt)

Cleated Belt 2200 Series Conveyor

2 4 C M WW LLLL A SSSS

- SSSS — Cleat Spacing*
- A — Output Shaft Position*
- LLLL — Conveyor Length Reference
- WW — Conveyor Width Reference
- M — Document Language, M = English
- C — Cleat Type*
- 4 — 4 = Cleated belt with V-guide tracking
  5 = Cleated belt with tracking cams (non V-guided belt)

*** See Ordering and Specifications Catalog for details.**

Conveyor Supports:

Maximum Distances:

K = 18" (457 mm)**

L = 6 ft (1829 mm)***

M = 18" (457 mm)

**** For Heavy Load Bottom Mount Package, mount support under gear head.**

***** For conveyors longer than 13 ft (3962 mm), install support at joint.**

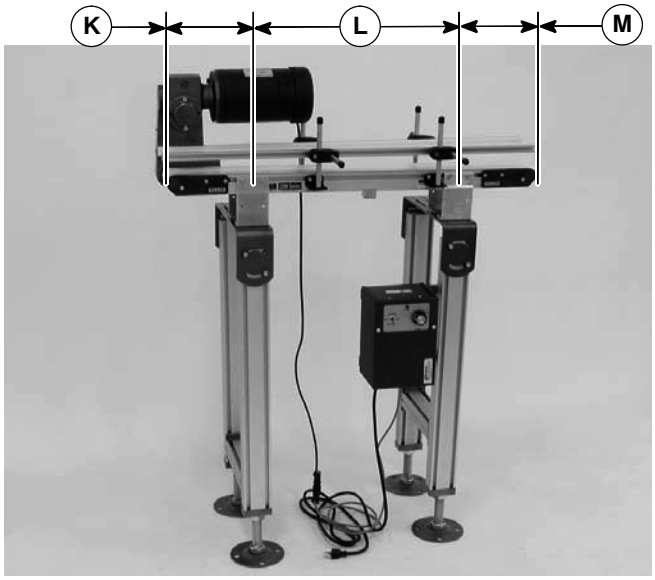

Figure 2

Specifications

Specifications:

Conveyor Width Reference (WW)	02	03	04	05	06	08	10	12	18	21	24
Conveyor Belt Width	1.75" (44mm)	2.75" (70mm)	3.75" (95mm)	5" (127mm)	6" (152mm)	8" (203mm)	10" (254mm)	12" (305mm)	18" (457mm)	21" (533mm)	24" (609mm)
Maximum Conveyor Load* (See NOTE Below)	30 lb (14kg)	35 lb (16kg)	42 lb (19kg)	50 lb (23kg)	60 lb (27kg)	70 lb (32kg)	80 lb (36kg)	80 lb (36kg)	80 lb (36kg)	80 lb (36kg)	80 lb (36kg)
Conveyor Startup Torque*	2 in-lb (0.5Nm)	3 in-lb (0.6Nm)	4 in-lb (0.7Nm)	6 in-lb (0.8Nm)	8 in-lb (0.9Nm)	10 in-lb (1.1Nm)	12 in-lb (1.4Nm)	14 in-lb (1.5Nm)	15 in-lb (1.7Nm)	18 in-lb (2.0Nm)	20 in-lb (2.3Nm)
Belt Travel	4.0" (88 mm) per revolution of pulley										
Maximum Belt Speed*	264 ft/minute (80.5 m/minute)										
Belt Takeup	0.38" (10 mm) of stroke = 0.75" (19 mm) of belt take-up										

Conveyor Length Reference (LL)	02	03	04	05	06	07	08	09	10	11	12	13**	14**	15**	16**	17**	18**
Conveyor Length Up to 18 ft in any length to nearest 0.12" (3mm)	2-ft (610 mm)	3-ft (914 mm)	4-ft (1219 mm)	5-ft (1524 mm)	6-ft (1829 mm)	7-ft (2134 mm)	8-ft (2438 mm)	9-ft (2743 mm)	10-ft (3048 mm)	11-ft (3353 mm)	12-ft (3658 mm)	13-ft (3962 mm)**	14-ft (4267 mm)**	15-ft (4572 mm)**	16-ft (4877 mm)**	17-ft (5182 mm)**	18-ft (5486 mm)**

NOTE: Maximum conveyor loads based on:

- **Non-accumulating product**
- **Product moving towards gearmotor**
- **Conveyor being mounted horizontal**

*** See Ordering and Specifications Catalog for details.**

**** Lengths available only in 6" (152 mm) & wider conveyors.**

Installation

NOTE: Conveyor MUST be mounted straight, flat and level within confines of conveyor. Use a level (N of Figure 3) for setup.

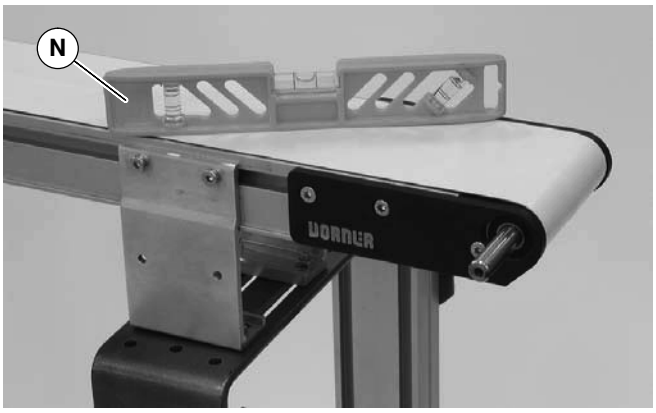

Figure 3

Installation Component List	
O	Conveyor frame (two sections if longer than 12ft)
P	Conveyor brackets (4x)
Q	Return rollers (for longer conveyors)

Required Tools

- Hex-key wrenches:
  4 mm, 5 mm
- Level
- Torque wrench

Recommended Installation Sequence

- Install support stands (see accessory instructions)
- Assemble conveyor (if required)
- Attach mounting brackets to conveyor
- Attach conveyor to stands
- Install return rollers on conveyor (optional)
- Mount gearmotor mounting package (see accessory instructions)
- Attach guides/accessories (see page 29 through 37 of "Service Parts" section for details)

Conveyors Up to 13 ft (3962 mm)

No assembly is required. Install mounting brackets and return rollers. Refer to "Mounting Brackets" on page 6 and "Return Rollers" on page 7.

Conveyors Longer Than 13 ft (3962 mm)

1. Locate conveyor sections (O Figure 4)

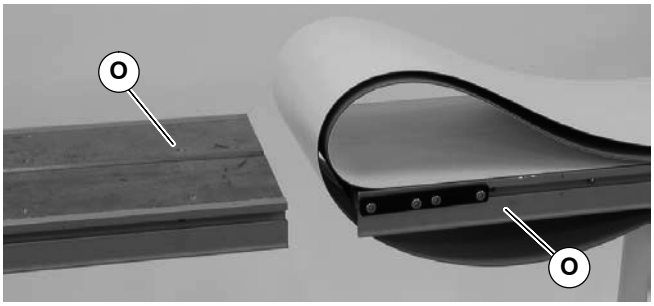

Figure 4

2. On tension end of the conveyor, identified with a label (R of Figure 5), push in head plate assembly (S): On both sides of conveyor, loosen and move cam tracking assemblies (T) (if equipped) away from head plates, then loosen fastening screws (U) and push head plate assembly inward.

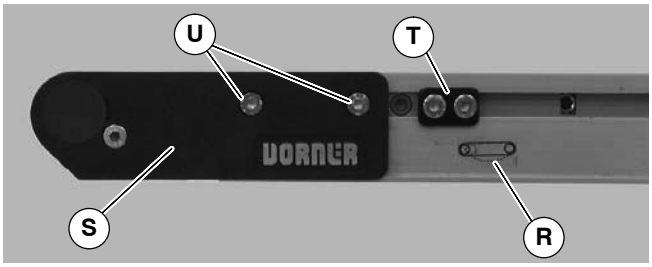

Figure 5

3. Roll out conveyor belt and place conveyor frame sections (O of Figure 6) into belt loop.

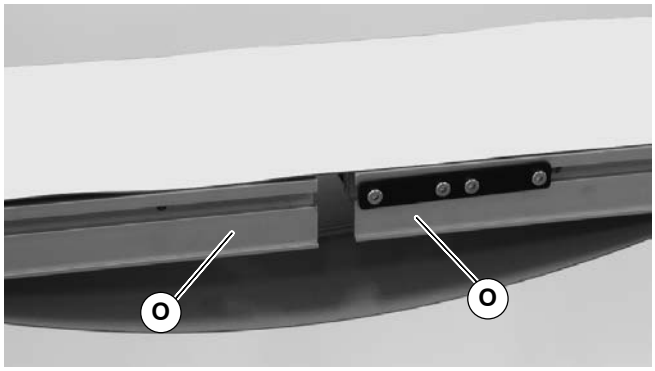

Figure 6

4. Join conveyor sections and install connector brackets (V of Figure 7) or connector/mount brackets (VA) and screws (W) on both sides as indicated. Tighten screws to 60 in-lb (7 Nm).

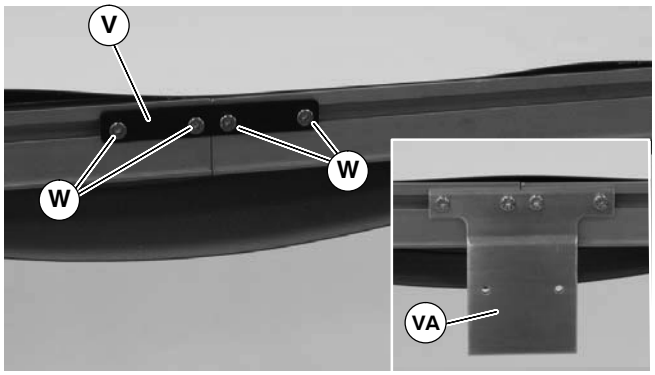

Figure 7

5. With a 5 mm hex-key wrench, rotate pinion gear (X of Figure 8) to tension the conveyor belt. Tighten fastening screws (U) on both sides of conveyor to 80 in-lb (9 Nm). For proper tensioning, refer to "Conveyor Belt Tensioning" on page 11.

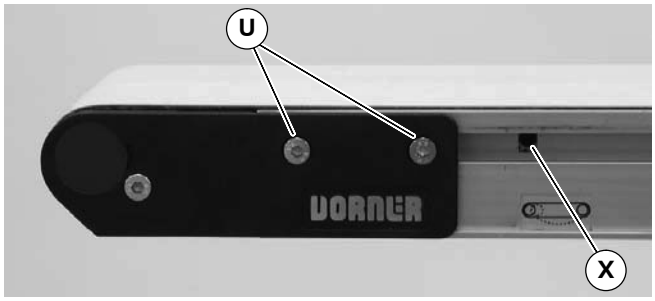

Figure 8

6. Install mounting brackets and return rollers. Refer to "Mounting Brackets" on page 6 and "Return Roller" on page 7.
7. If equipped with cam tracking assemblies (T of Figure 5), reposition and adjust belt tracking. Refer to "Conveyor Belt Tracking" on page 12.

Mounting Brackets

1. Locate brackets. Exploded views shown in Figures 9 & 10.

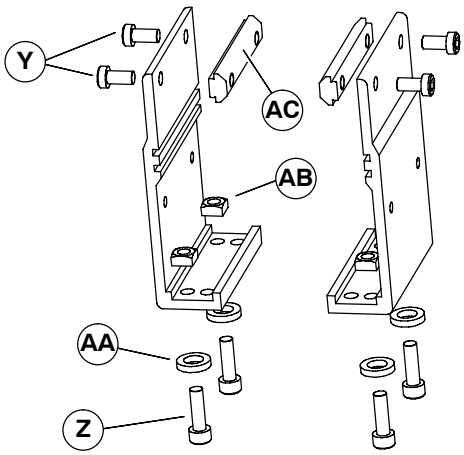

Mounting Brackets for Flat Belt Conveyor

Figure 9

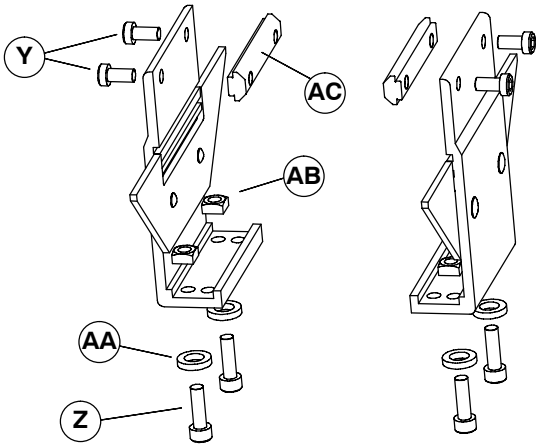

Mounting Brackets for Cleated Belt Conveyor

Figure 10

2. Remove screws (Y & Z of Figures 9 & 10), washers (AA), nuts (AB) and T-bars (AC) from brackets.
3. Insert T-bars (AC of Figures 9 & 10) into conveyor side slots (AD of Figure 11). Fasten brackets (P of Figure 11) to conveyor with mounting screws (Y).

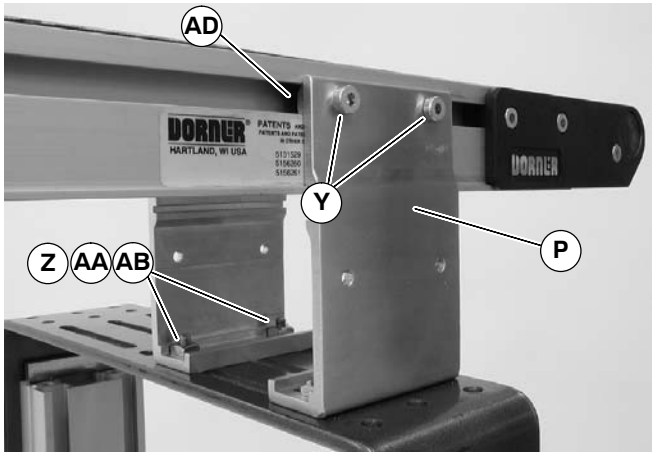

Figure 11

NOTE: Mounting brackets for flat belt conveyors shown.

4. Fasten brackets to support stand with mounting screws (Z of Figure 11), washers (AA) and nuts (AB).
5. Tighten screws (Y & Z of Figure 11) to 60 in-lb (7 Nm).

Return Rollers

Cleated Belt and 2–6" (51–152 mm) Wide Flat Belt Conveyors

1. Locate return rollers. Exploded views shown in Figures 12 & 13.

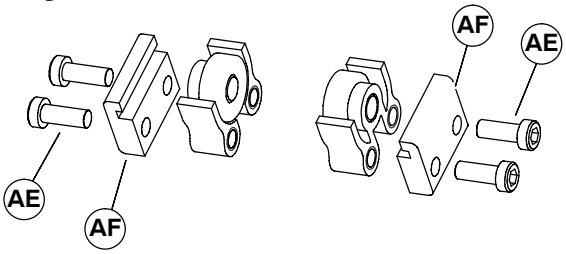

Return Rollers for Flat Belt Conveyor

Figure 12

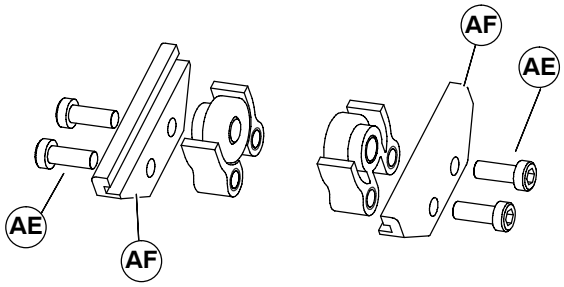

Return Rollers for Cleated Belt Conveyor

Figure 13

2. Remove screws (AE of Figures 12 & 13) and clips (AF) from roller assembly.
3. Install roller assemblies (Q of Figure 14) as shown. Tighten screws (AE) to 60 in-lb (7 Nm).

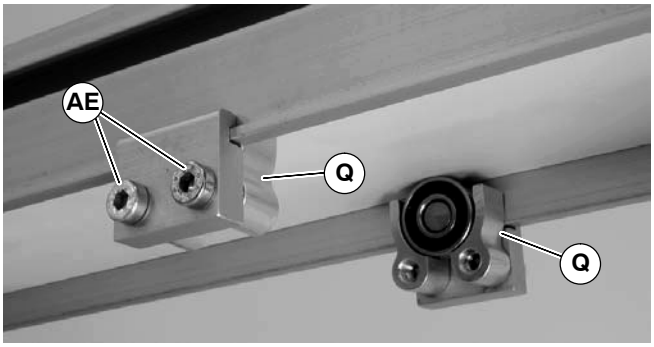

Figure 14

8–24" (203–610 mm) Wide Flat Belt Conveyors

1. Locate return rollers. Exploded view shown in Figure 15.

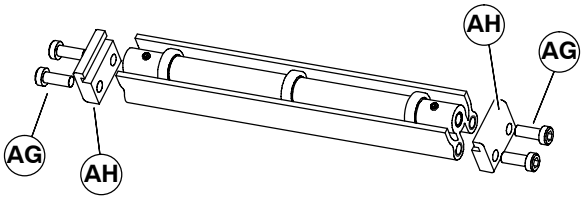

Figure 15

2. Remove screws (AG of Figure 15) and clips (AH) from roller assembly.
3. Install roller assembly as shown (Q of Figure 16). Tighten screws (AG) to 60 in-lb (7 Nm).

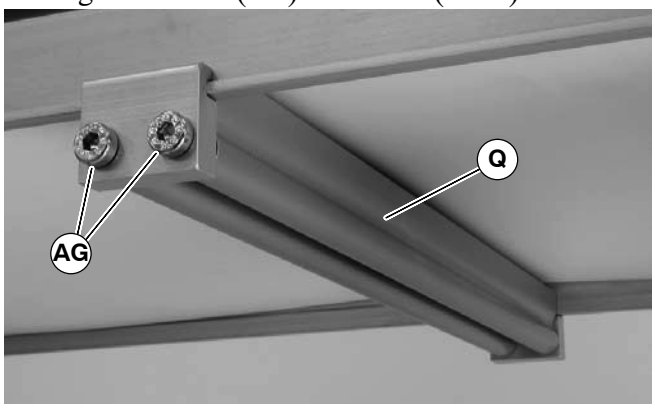

Figure 16

Preventive Maintenance and Adjustment

Required Tools

Standard Tools

- Hex-key wrenches:
  2.5 mm, 4 mm, 5 mm
- Arbor press

Special Tools

- 807–1078 Sealed Bearing Removal Tool
- 450292 Sealed Bearing Installation Tool

Checklist

- Keep service parts on hand (see "Service Parts" section for recommendations)
- Keep supply of belt cleaner (part # 625619)
- Clean entire conveyor and knurled pulley while disassembled
- Replace worn or damaged parts

Lubrication

No lubrication is required. Replace bearings if worn.

Maintaining Conveyor Belt

Troubleshooting

Inspect conveyor belt for:

- Surface cuts or wear
- Stalling or slipping
- Damage to V-guide

Surface cuts and wear indicate:

- Sharp or heavy parts impacting belt
- Jammed parts
- Improperly installed bottom wipers (if installed)
- Accumulated dirt in wipers (if installed)
- Foreign material inside the conveyor
- Improperly positioned accessories
- Bolt-on guiding is pinching belt

Stalling or slipping indicates:

- Excessive load on belt
- Conveyor belt or drive timing belt are not properly tensioned
- Worn knurl or impacted dirt on drive pulley
- Intermittent jamming or drive train problems

Damage to V-guide indicates:

- Twisted or damaged conveyor frame
- Dirt impacted on pulleys
- Excessive or improper side loading

NOTE: Visit www.dorner.com for complete list of troubleshooting solutions.

Cleaning

IMPORTANT: Do not use belt cleaners that contain alcohol, acetone, Methyl Ethyl Ketone (MEK) or other harsh chemicals.

Use Dorner Belt Cleaner (part # 625619). Mild soap and water may also be used. Do not soak the belt.

For /05 woven polyester and /06 black anti-static belts, use a bristled brush to improve cleaning.

Conveyor Belt Replacement

WARNING

Exposed moving parts can cause severe injury.

LOCK OUT POWER before removing guards or performing maintenance.

Conveyor Belt Replacement Sequence

- Remove old conveyor belt:
  - -Conveyor without Stands or Gearmotor Mounting Package
  - -Conveyor with Stands and Gearmotor Mounting Package
- Install new conveyor belt
- Tension conveyor belt

Belt Removal for Conveyor Without Stands or Gearmotor Mounting Package

1. If equipped, remove bottom wipers (AJ of Figure 17): Remove fastening screws (AI) then remove wiper (AJ).

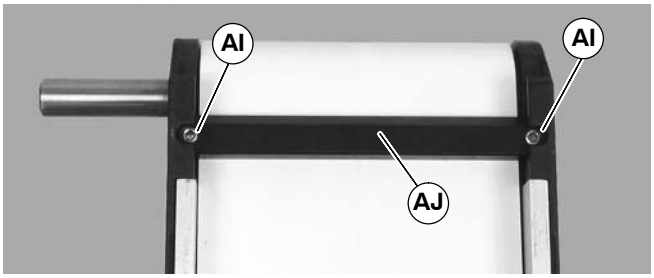

Figure 17

2. If equipped, remove return rollers and guiding and accessories from one side of conveyor.
3. On tension end of the conveyor, identified with a label (R of Figure 18), push in head plate assembly (S): On both sides of conveyor, loosen and move cam tracking assemblies (T) (if equipped) away from head plates, then loosen fastening screws (U) and push head plate assembly inward.

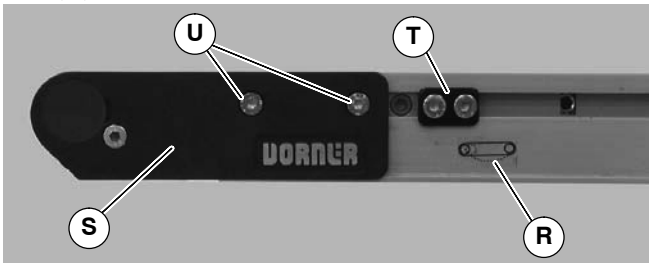

Figure 18

4. Remove conveyor belt.

Belt Removal for Conveyor With Stands and Gearmotor Mounting Package

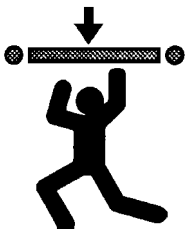

WARNING

Removing mounting brackets without support under gearmotor will cause conveyor to tip, causing severe injury.

PROVIDE SUPPORT UNDERNEATH THE GEARMOTOR WHEN CHANGING THE BELT

1. Place temporary support stands (AK of Figure 19) at both ends of the conveyor. Place an additional support stand under the drive motor (AL), if equipped. See **WARNING**.

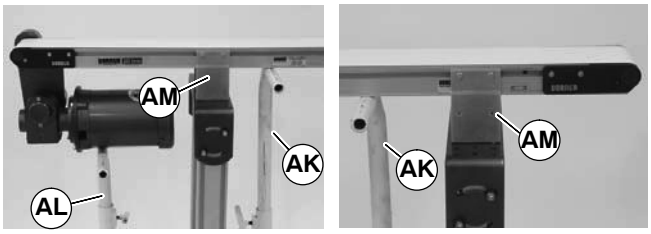

Figure 19

2. Remove mounting brackets (AM of Figure 19) from one side of conveyor. (Reverse steps 3 & 4 of "Mounting Brackets" section on page 6.) If equipped with heavy load drive package, remove brackets from side opposite drive cover (AN of Figure 20).
3. If equipped, remove bottom wipers (AJ of Figure 17): Remove fastening screws (AI) then remove wiper (AJ).
4. If equipped, remove return rollers, guiding and accessories from side opposite drive cover (AN of Figure 20).

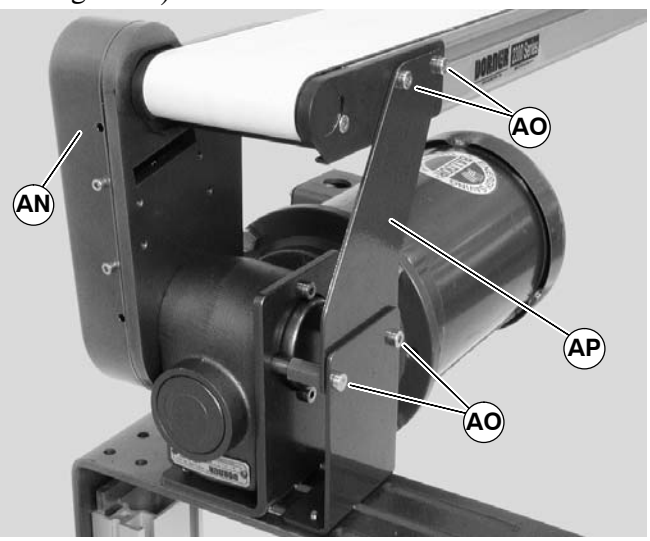

Figure 20

5. If equipped with heavy load drive package, remove drive support bracket (AP of Figure 20): Remove bracket screws (AO) then remove bracket (AP).

6. On tension end of the conveyor, identified with a label (R of Figure 21), push in head plate assembly (S): On both sides of conveyor, loosen and move cam tracking assemblies (T) (if equipped) away from head plates, then loosen fastening screws (U) and push head plate assembly inward.

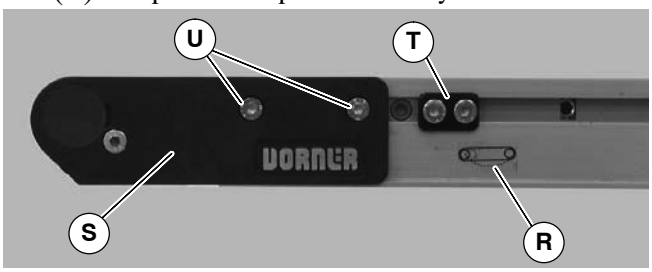

Figure 21

7. Remove belt (AQ of Figure 22) from conveyor.

Figure 22

Belt Installation for Conveyor without Stands or Gearmotor Mounting Package

1. Orient belt so splice leading fingers (AR of Figure 23) point in the direction of belt travel as identified by the conveyor directional label (AS).

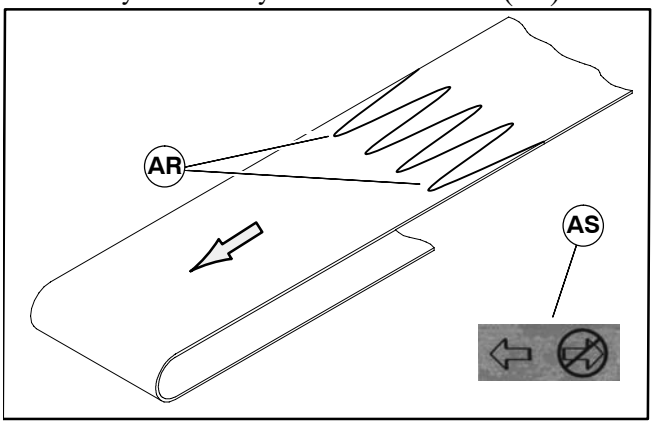

Figure 23

2. Slide belt onto the conveyor frame assembly.
3. Tension belt. Refer to "Conveyor Belt Tensioning" on page 11.
4. If equipped, install wipers, return rollers and guiding.

Belt Installation for Conveyor with Stands and Gearmotor Mounting Package

1. Ensure temporary support stands (AK of Figure 19) are placed at both ends of the conveyor. Place an additional support stand under the drive motor (AL), if equipped. See WARNING.
2. Orient belt so splice leading fingers (AR of Figure 23) point in the direction of belt travel as identified by the conveyor directional label (AS).
3. Install belt (AQ of Figure 24) on conveyor. Lift conveyor slightly to avoid pinching belt on temporary support stands.

Figure 24

4. Re-install conveyor mounting brackets. Refer "Mounting Brackets" on page 6, steps 3 through 5.
5. If equipped with a heavy load drive package, re-install drive support bracket (AP of Figure 20).
6. Tension belt. Refer to "Conveyor Belt Tensioning" on page 11.
7. If equipped, re-install wipers, return rollers and guiding.

Conveyor Belt Tensioning

WARNING

Exposed moving parts can cause severe injury.

LOCK OUT POWER before removing guards or performing maintenance.

Conveyors with 1.25" (32 mm) Diameter Pulleys

1. On tension end of the conveyor, identified with a label (R of Figure 25), adjust head plate assembly (S): On both sides of conveyor, loosen fastening screws (U) and rotate pinion gear (X) to adjust head plate assembly.

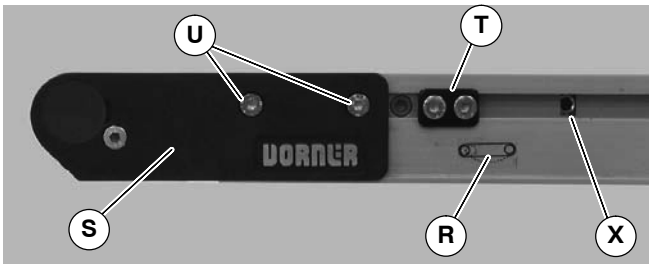

Figure 25

2. Adjust head plate assembly so end of conveyor frame aligns with or between the head plate tensioning marks (AT & AU of Figure 26). Replace belt if proper tensioning can not be obtained while aligning the end of the conveyor frame with or between the tensioning marks. See **NOTE**.

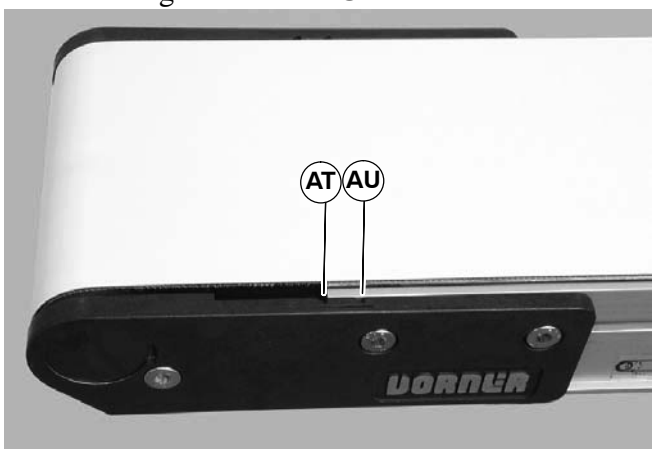

Figure 26

NOTE: On pinion gear, do not exceed a torque of 25 in-lb (2.8 Nm) for 2 – 12" (44 – 305mm) wide conveyors and 50 in-lb (4.5 Nm) for an 18 – 24" (457 – 610mm) wide conveyor. Over tensioning the conveyor belt could cause excessive pulley bearing load and early failure.

3. After adjusting proper tensioning, tighten fastening screws (U of Figure 25) on both sides of conveyor to 60 in-lb (7 Nm).
4. If equipped with cam tracking assemblies (T of Figure 25), position against head plates and adjust belt tracking. Refer to “Conveyor Belt Tracking” on page 12.

Conveyors with Nose Bar Idlers

1. On tension end of the conveyor, identified with a label (R of Figure 27), adjust head plate assembly (S): On both sides of conveyor, loosen fastening screws (U) and rotate pinion gear (X) to adjust head plate assembly.

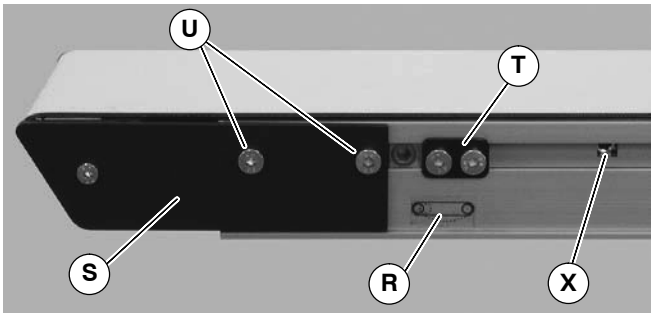

Figure 27

2. Adjust head plate assembly so the edge of the axle support plate (AV of Figure 28) is separated from the end of the conveyor (AW) by 1.125" (29 mm). Replace belt if proper tensioning can not be obtained within a distance of 1.50" (38 mm). See **NOTE**.

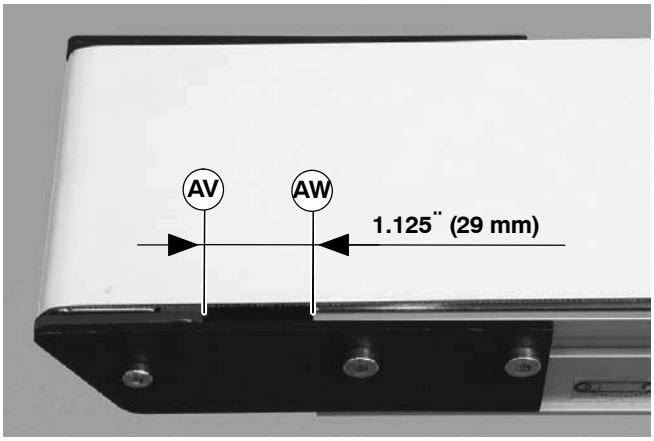

Figure 28

NOTE: On pinion gear, do not exceed a torque of 25 in-lb (2.8 Nm) for 2 – 12" (44 – 305mm) wide conveyors or 50 in-lb (4.5 Nm) for an 18 – 24" (457 – 610mm) wide conveyor. Over tensioning the conveyor belt could cause excessive pulley bearing load and early failure.

3. After adjusting proper tensioning, tighten fastening screws (U of Figure 27) on both sides of conveyor to 60 in-lb (7 Nm).
4. If equipped with cam tracking assemblies (T of Figure 27) position against head plates and adjust belt tracking. Refer to "Conveyor Belt Tracking", next section.

Conveyor Belt Tracking

V-Guided Belts

V-guided belts do not require tracking adjustment.

Non V-Guided Belts

Non V-guided belt conveyors are equipped with belt tracking cam assemblies (T of Figure 29) for belt tracking adjustment.

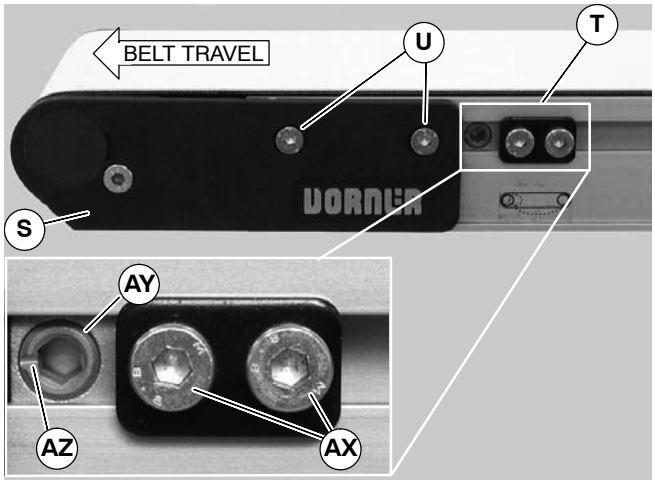

Figure 29

When adjusting belt tracking, always adjust the discharge end of the conveyor first. To adjust belt tracking:

1. Ensure head plate fastening screws (U of Figure 29) on both sides of conveyor are tightened.
2. On both sides of conveyor, loosen two (2) cam fastening screws (AX). Adjust cams (AY) until indicator slots (AZ) are horizontal and facing end of conveyor. Then slide cam assemblies against head plates (S) and re-tighten cam fastening screws (AX) to 60 in-lb (7 Nm).
3. On the side toward which the belt is tracking, loosen head plate fastening screws (U).
4. With the conveyor running, use a 5 mm hex-key wrench to rotate the tracking cam (AY) in small increments until the belt tracks in the center of the conveyor. Then while holding the cam in position, re-tighten the head plate fastening screws (U) with a 4 mm hex-key wrench to 60 in-lb (7 Nm).

Pulley Removal

WARNING

Exposed moving parts can cause severe injury.

LOCK OUT POWER before removing guards or performing maintenance.

Remove conveyor belt to access pulley(s). See "Conveyor Belt Replacement" on page 8. Remove the desired pulley following the corresponding instructions below:

- A – Idler Pulley Removal
- B – Drive Pulley Removal

A – Idler Pulley Removal

1. On both sides of conveyor, loosen two (2) fastening screws (U of Figure 30). Then slide idler pulley assembly out from the conveyor frame.

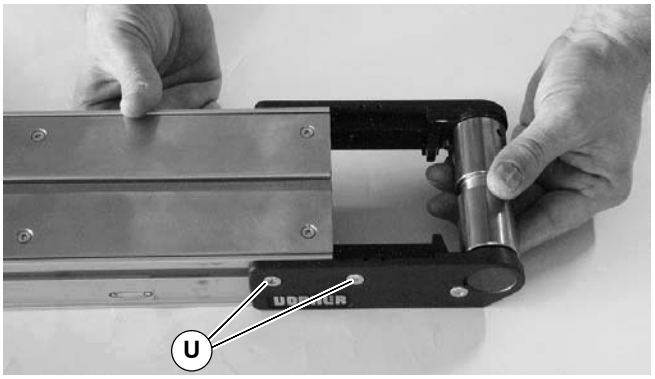

Figure 30

2. Remove bearing covers (BA of Figure 31).

Figure 31

3. With 4mm hex-key wrench, loosen shaft bearing taper screw (BB of Figure 32). Steady pulley with second hex-key wrench (BC) inserted into pulley hole. Repeat procedure for opposite side of pulley.

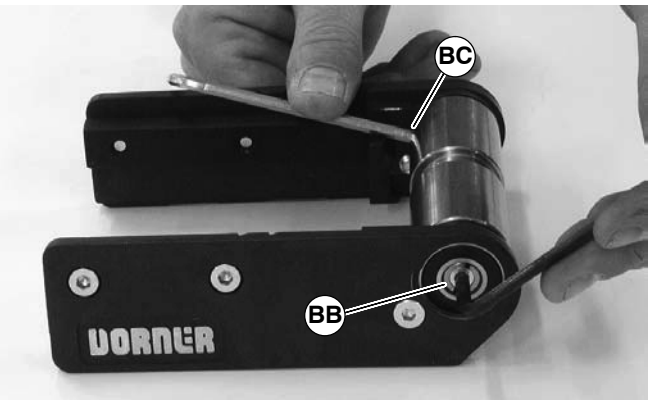

Figure 32

NOTE: Idler shaft is held to bearing inner race with a mild Loctite. The bearing must be pulled from the idler shaft using a gear puller or similar device.

4. With bearing removal tool, (BD of Figure 33), part number 807–1078, remove head plate from idler shaft. Connect tool jaws at indicated points (BE).

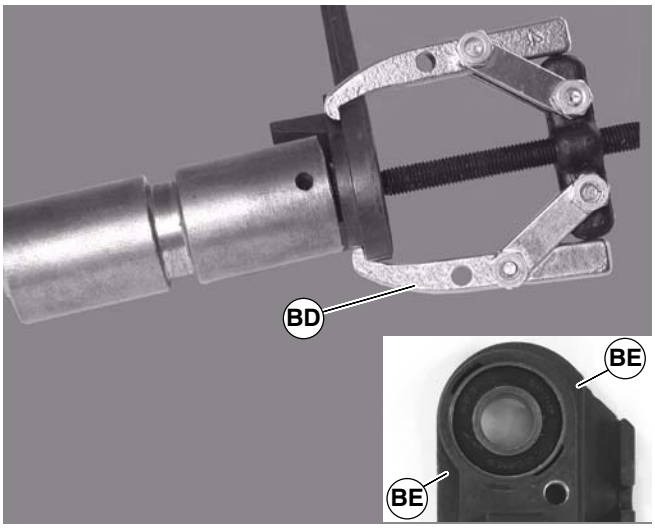

Figure 33

5. Repeat step 4 on opposite side.

B – Drive Pulley Removal

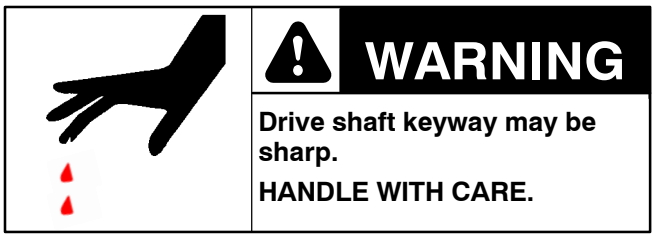

1. On both sides of conveyor, loosen two (2) fastening screws (U of Figure 34). Then slide drive pulley assembly out from the conveyor frame.

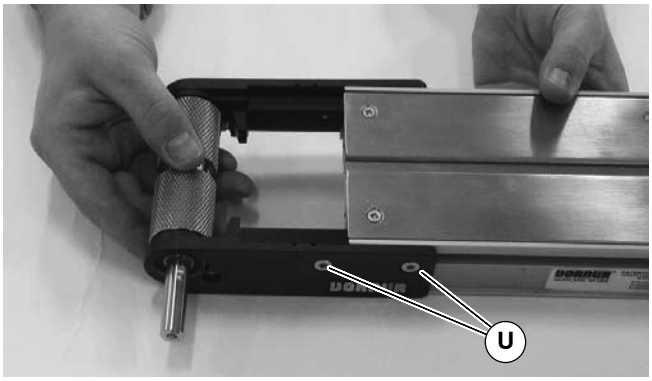

Figure 34

2. Remove bearing cover (BA of Figure 35) from side opposite of drive shaft.

Figure 35

3. On side opposite of drive shaft, loosen pulley taper screw (BB of Figure 36) with 4mm hex-key wrench. Steady pulley with second hex-key wrench (BC) inserted into pulley hole.

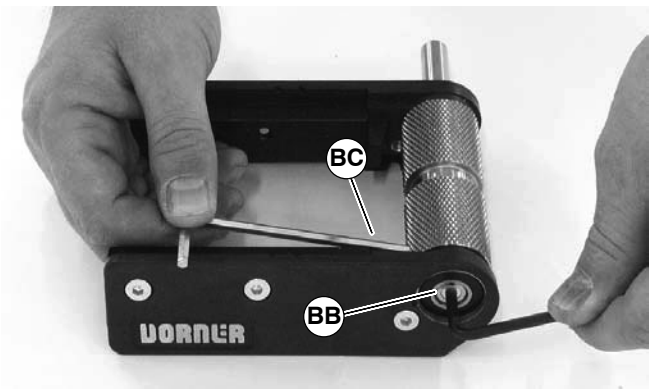

Figure 36

NOTE: The stub shaft, opposite the drive shaft, is held to bearing inner race with a mild Loctite. The bearing must be pulled from the stub shaft using a gear puller or similar device.

4. With bearing removal tool, (BD of Figure 37), part number 807–1078, remove head plate from stub-shaft. Connect tool jaws at indicated points (BE).

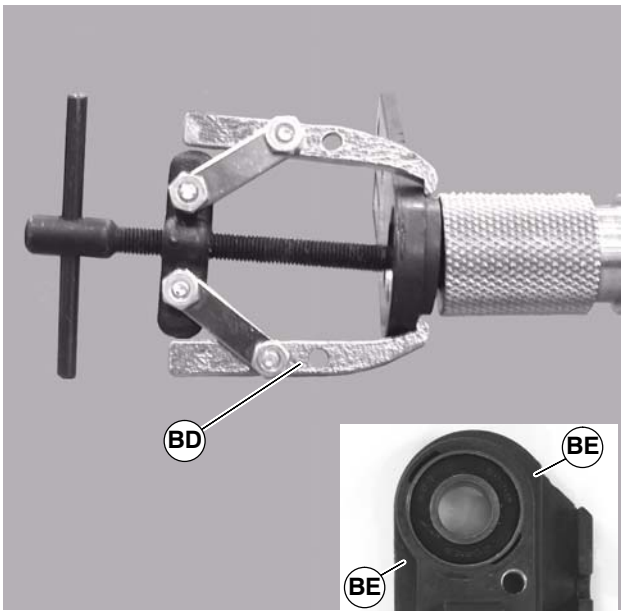

Figure 37

5. With bearing removal tool, (BD of Figure 38), part number 807–1078, remove head plate from drive shaft. Connect tool jaws at indicated points (BE).

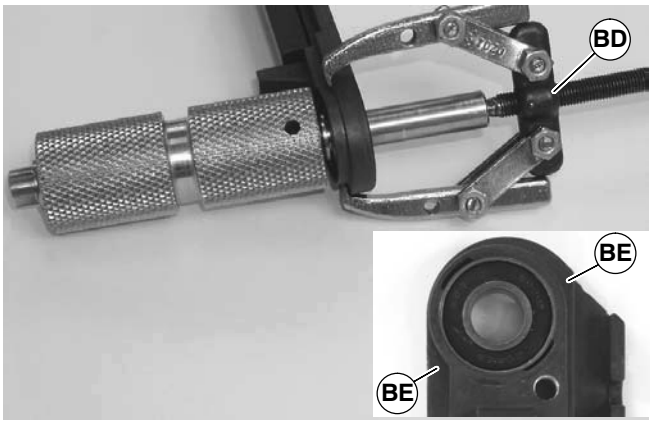

Figure 38

Bearing Removal & Replacement

Removal

1. Turn bearing (BF of Figure 39) to align with slots (BG) in head plate. Then remove bearing.

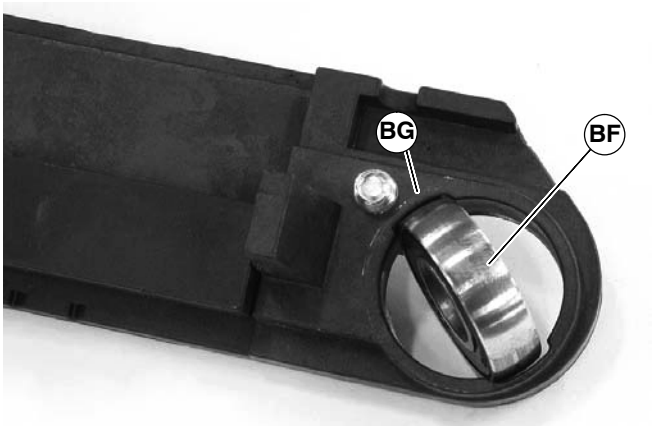

Figure 39

Replacement

1. Inspect head plate bearing surface. If worn or damaged, replace head plate. See “Service Parts” on page 21.
2. Insert bearing (BF of Figure 40) into head plate slot and twist bearing to fit into bearing enclosure.

Figure 40

Pulley Replacement

Drive Pulley

1. With bearing installed in head plate, use a bearing installation tool, (BH of Figure 41), part number 450292, to press the bearing onto the drive shaft.

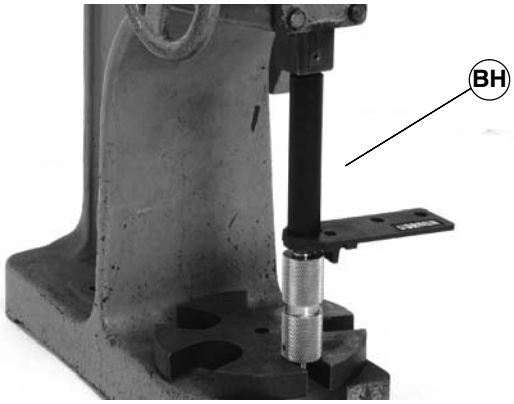

Figure 41

NOTE: Do not use an excessive amount of Loctite 641. Excess may leak into bearing, causing bearing failure.

2. Apply a small amount of Loctite 641, or equivalant, to the outside of stub shaft (BI of Figure 42).

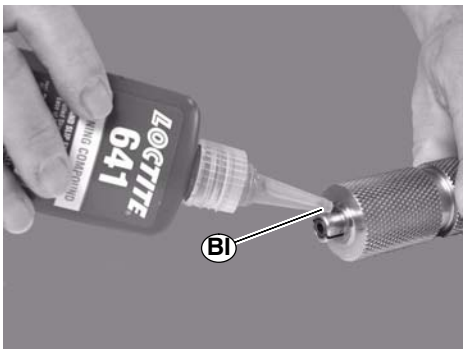

Figure 42

3. With bearing installed in head plate, slide bearing on to stub shaft (BI of Figure 43) of pulley.

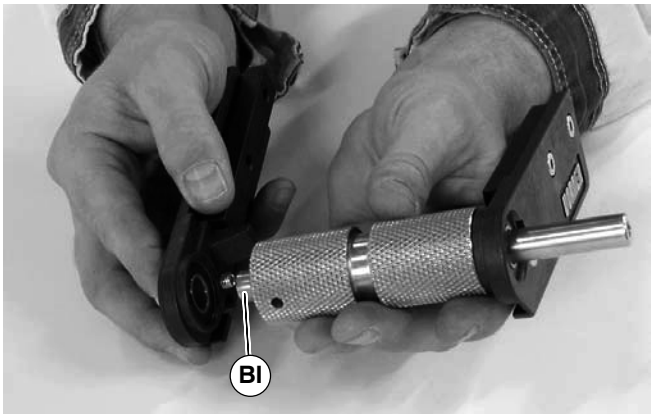

Figure 43

NOTE: DO NOT tighten stub shaft bearing taper screw at this time.

4. Install pulley assembly on conveyor. On both sides of conveyor tighten fastening screws (U of Figure 44) to 60 in-lb (7 Nm).

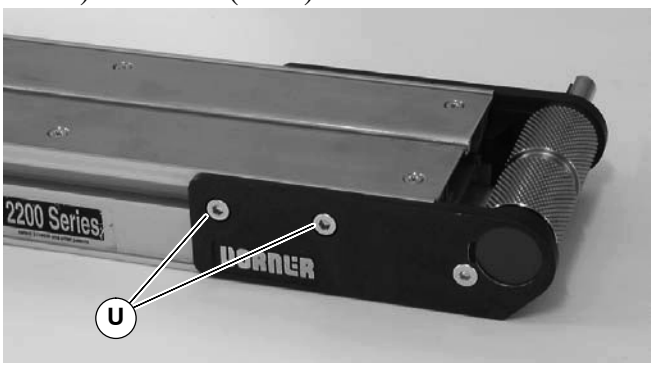

Figure 44

5. With 4mm hex-key wrench, tighten pulley taper screw (BB of Figure 45) to 75 in-lb (8.5 Nm). Steady pulley with second hex-key wrench (BC) inserted into pulley hole.

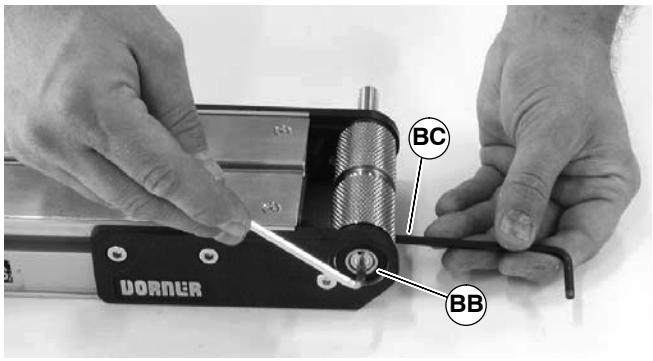

Figure 45

6. Install bearing cover (BA of Figure 46).

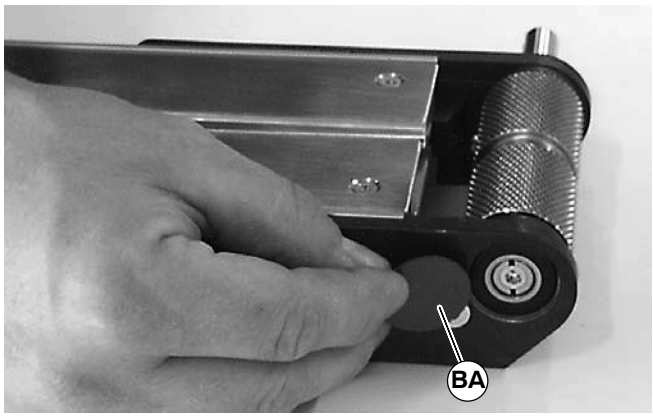

Figure 46

Idler Pulley

NOTE: Do not use and excessive amount of Loctite 641. Excess may leak into bearing, causing bearing failure.

1. Apply a small amount of Loctite 641, or equivalant, to the outside of shaft (BI of Figure 47).

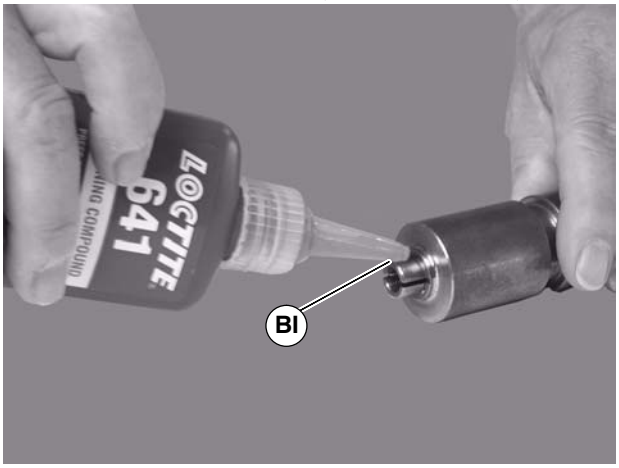

Figure 47

2. With bearing installed in head plate, slide bearing on to shaft (BI of Figure 48) of pulley.

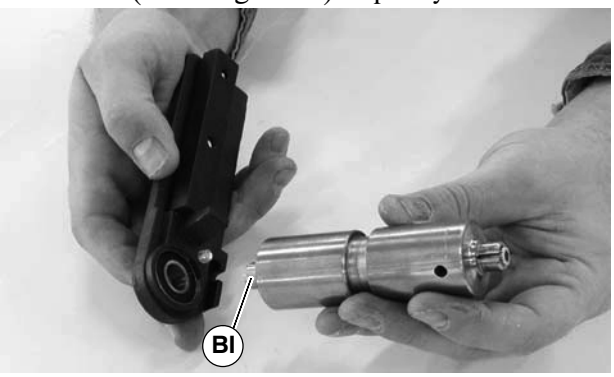

Figure 48

3. Repeat steps 1 and 2 on opposite side of pulley.

NOTE: DO NOT tighten shaft bearing taper screws at this time.

4. Install pulley assembly on conveyor. On both sides of conveyor, hand tighten fastening screws (U of Figure 49).

Figure 49

5. On both sides of pulley, use a 4mm hex-key wrench to tighten shaft bearing taper screws (BB of Figure 50) to 75 in-lb (8.5 Nm). Steady pulley with second hex-key wrench (BC) inserted into pulley hole.

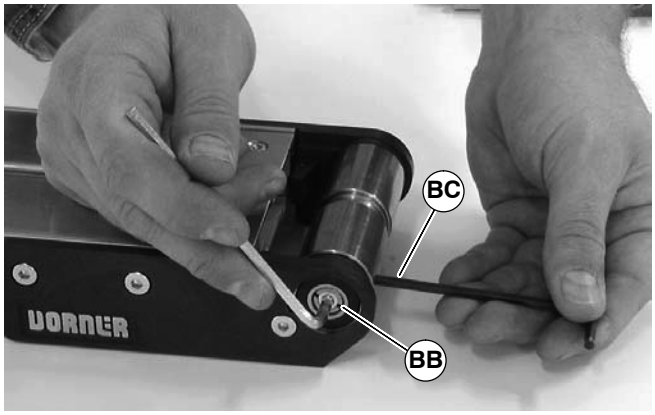

Figure 50

6. Install bearing covers (BA of Figure 51).

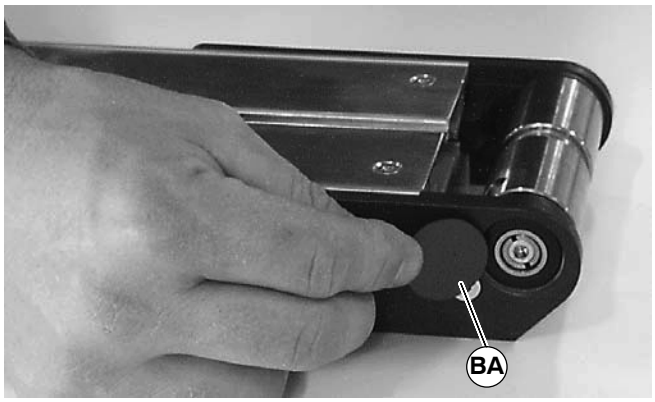

Figure 51

Nose Bar Bearing Replacement

1. On both sides of conveyor, use a 4 mm hex-key wrench to loosen cam fastening screws (BK of Figure 52) and slide cam assemblies toward the center of the conveyor.

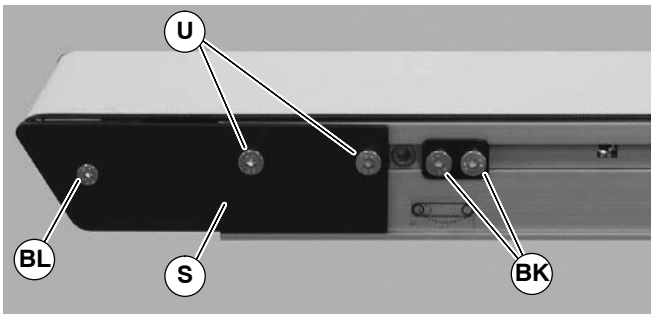

Figure 52

2. On both sides of conveyor, use a 4 mm hex-key wrench to loosen head plate fastening screws (U) to remove belt tension. Then remove belt from end of conveyor.
3. On one side of conveyor, use a 3 mm and 4 mm hex-key wrench to remove head plate fastening screws (BL & U) and remove head plate (S).
4. Slide bearing rods (BM of Figure 53) out side of conveyor and replace bearings (BN) as necessary.

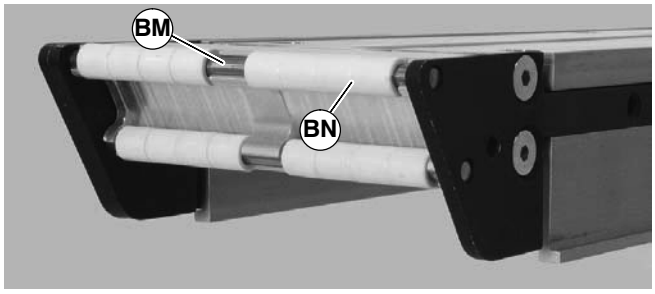

Figure 53

5. After replacing bearings, re-install head plate (S of Figure 52). Use a 3 mm hex-key wrench to tighten one (1) fastening screw (BL) to 30 in-lb (3.4 Nm). Leave two (2) fastening screws (U) loose for belt tensioning.
6. Re-install belt on end of conveyor, then tension the belt. See “Conveyor Belt Tensioning” on page 11.
7. Re-position the cam assemblies against the head plates and adjust belt tracking. See “Conveyor Belt Tracking” on page 12.

Notes

Service Parts

NOTE: For replacement parts other than those shown on this page, contact an authorized Dorner Service Center or the factory.

2” (51mm) Wide Conveyor Assembly

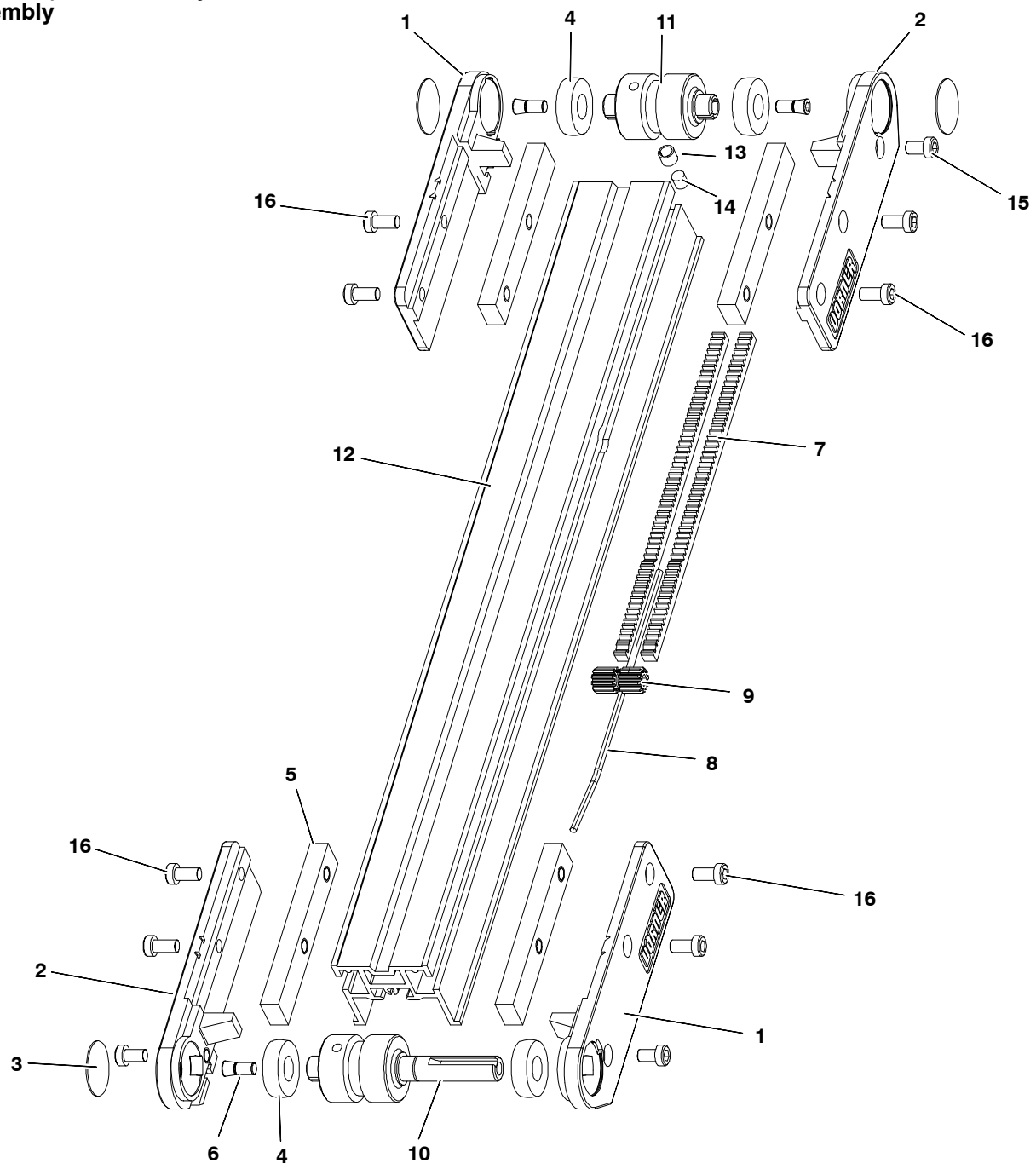

Item	Part Number	Description
1	240325	Head Plate LH
2	240326	Head Plate RH
3	240327	Bearing Cover Disk
4	240328	Bearing
5	240329	Tension Slide Bar
6	240330	Taper Screw
7	240420	Rack Gear 14.5 PA x 24 P
8	240422	Pinion Pin
9	240423	Pinion 2” (51mm)
10	240602	Drive Spindle 2” (51mm)
11	240702	Idler Spindle 2” (51mm)
12	See Chart Below	2” (51mm) Frame
13	450226SSP	Sleeve, .25” Magnet Stainless Steel
14	808–020	Magnet .25” Dia x .25” Long
15	920691M	Socket Head Screw M6 x 10mm
16	920692M	Socket Head Screw M6 x 12mm

Item 12: 2” (51mm) Conveyor Frame	
Length	Part Number
2’ (610mm)	240402–01908
3’ (914mm)	240402–03108
4’ (1219mm)	240402–04308
5’ (1524mm)	240402–05508
6’ (1829mm)	240402–06708
7’ (2134mm)	240402–07908
8’ (2438mm)	240402–09108
9’ (2743mm)	240402–10308
10’ (3048mm)	240402–11508
11’ (3353mm)	240402–12708
12’ (3658mm)	240402–13908

3” (76mm) to 6” (152mm) Wide Conveyor Assembly

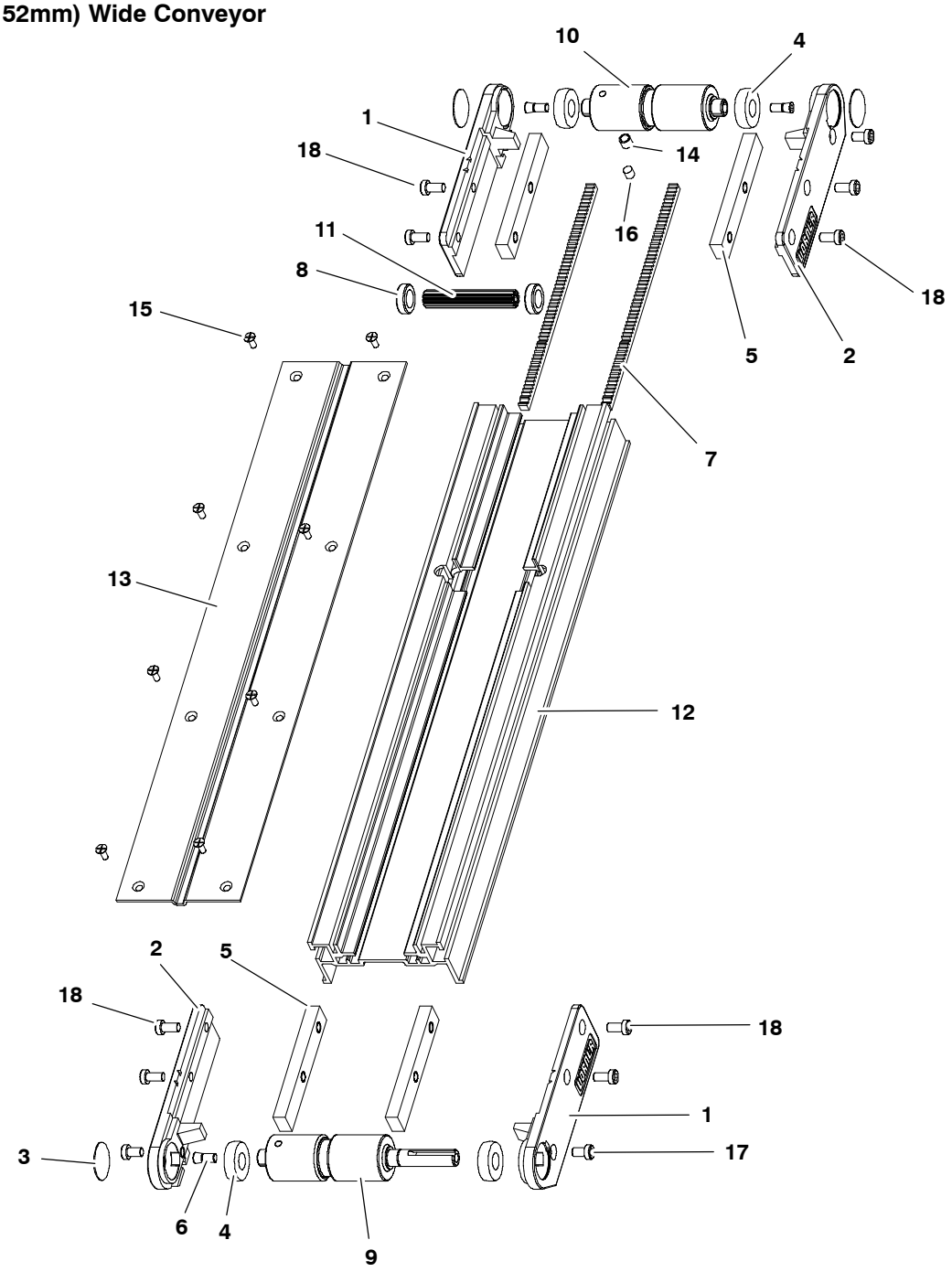

Item	Part Number	Description
1	240325	Head Plate LH
2	240326	Head Plate RH
3	240327	Bearing Cover Disk
4	240328	Bearing
5	240329	Tension Slide Bar
6	240330	Taper Screw
7	240420	Rack Gear 14.5 PA x 24 P
8	240421	Pinion Bushing
9	240603	Drive Spindle 3” (76mm)
	240604	Drive Spindle 4” (102mm)
	240605	Drive Spindle 5” (127mm)
	240606	Drive Spindle 6” (152mm)
10	240703	Idler Spindle 3” (76mm)
	240704	Idler Spindle 4” (102mm)
	240705	Idler Spindle 5” (127mm)
	240706	Idler Spindle 6” (152mm)
11	203003M	Gear Pinion 3” (76mm)
	203004M	Gear Pinion 4” (102mm)
	203005M	Gear Pinion 5” (127mm)
	203006M	Gear Pinion 6” (152mm)
12	See Chart Below	Conveyor Frame
13	See Chart Below	Bed Plate
14	450226SSP	Sleeve, .25” Magnet Stainless Steel
15	807–1074	Flat Head Screw M4 x 10mm
16	808–020	Magnet .25” Dia x .25” Long
17	920691M	Socket Head Screw M6 x 10mm
18	920692M	Socket Head Screw M6 x 12mm

Item 12: Conveyor Frame	
Length	Part Number
2’ (610mm)	2404WW–01908
3’ (914mm)	2404WW–03108
4’ (1219mm)	2404WW–04308
5’ (1524mm)	2404WW–05508
6’ (1829mm)	2404WW–06708
7’ (2134mm)	2404WW–07908
8’ (2438mm)	2404WW–09108
9’ (2743mm)	2404WW–10308
10’ (3048mm)	2404WW–11508
11’ (3353mm)	2404WW–12708
12’ (3658mm)	2404WW–13908
13’ (3962mm)	2404WW–07200 2404WW–07908*
14’ (4267mm)	2404WW–07200 2404WW–09108*
15’ (4572mm)	2404WW–07200 2404WW–10308*
16’ (4877mm)	2404WW–07200 2404WW–11508*
17’ (5182mm)	2404WW–07200 2404WW–12708*
18’ (5486mm)	2404WW–07200 2404WW–13908*
WW = Conveyor width reference: 03, 04, 05, 06 * = 6” (152mm) and wider conveyors	

Item 13: Bed Plate	
Length	Part Number
2’ (610mm)	2405WW–01904
3’ (914mm)	2405WW–03104
4’ (1219mm)	2405WW–04304
5’ (1524mm)	2405WW–05504
6’ (1829mm)	2405WW–06704
7’ (2134mm)	2405WW–07904
8’ (2438mm)	2405WW–09104
9’ (2743mm)	2405WW–10304
10’ (3048mm)	2405WW–11504
11’ (3353mm)	2405WW–12704
12’ (3658mm)	2405WW–13904
13’ (3962mm)	2405WW–07196 2404WW–07904*
14’ (4267mm)	2405WW–07196 2404WW–09104*
15’ (4572mm)	2405WW–07196 2404WW–10304*
16’ (4877mm)	2405WW–07196 2404WW–11504*
17’ (5182mm)	2405WW–07196 2404WW–12704*
18’ (5486mm)	2405WW–07196 2404WW–13904*
WW = Conveyor Width reference: 03, 04, 05, 06 * = 6” (152mm) and wider conveyors	

8” (203mm) to 12” (605mm) Wide Conveyor Assembly

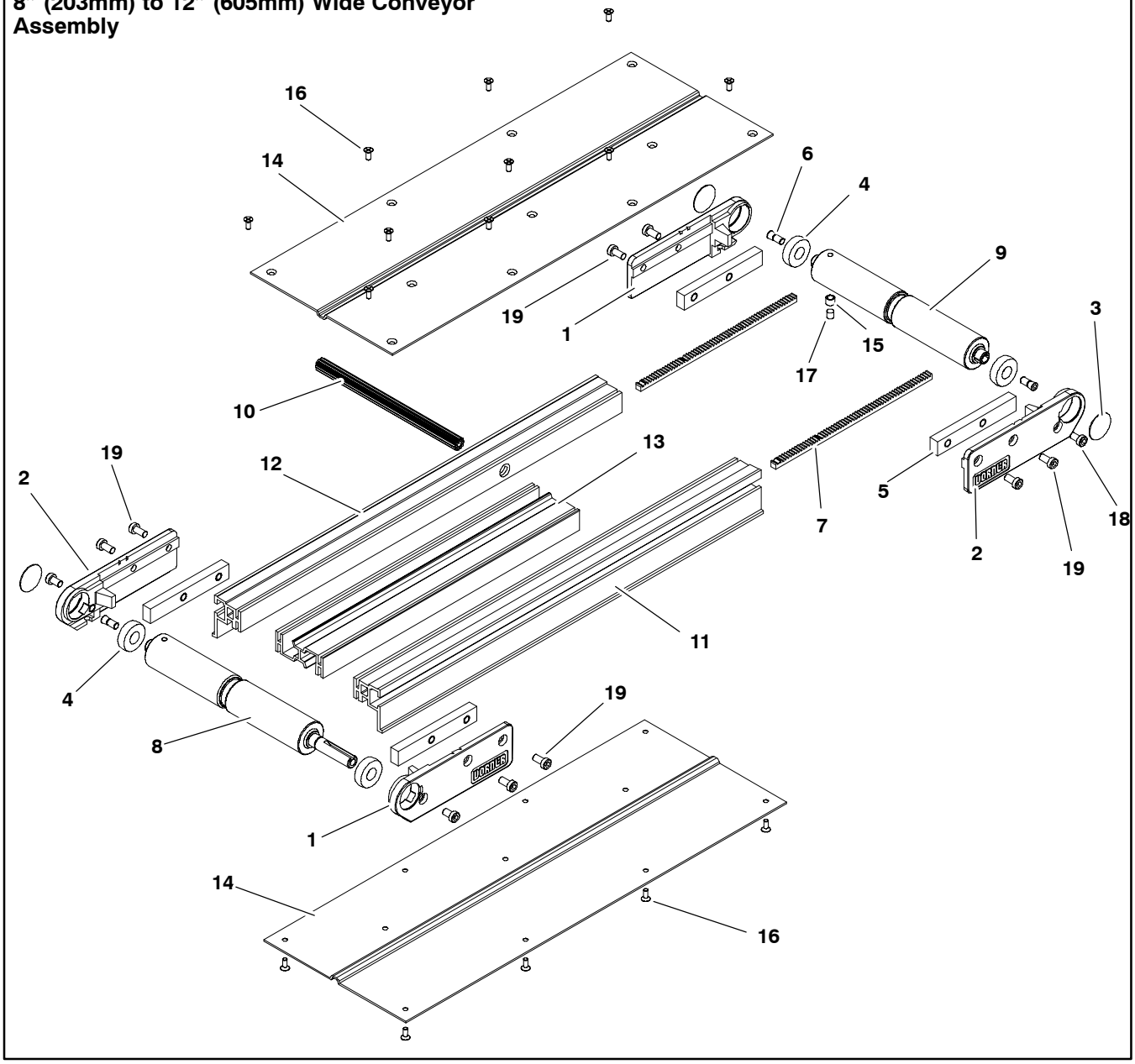

Item	Part Number	Description
1	240325	Head Plate LH
2	240326	Head Plate RH
3	240327	Bearing Cover Disk
4	240328	Bearing
5	240329	Tension Slide Bar
6	240330	Taper Screw
7	240420	Rack Gear 14.5 PA x 24P
8	240608	Drive Spindle 8” (203mm)
	240610	Drive Spindle 10” (254mm)
	240612	Drive Spindle 12” (305mm)

9	240708	Idler Spindle 8” (203mm)
	240710	Idler Spindle 10” (254mm)
	240712	Idler Spindle 12” (305mm)
10	203008M	Pinion Gear 8” (203mm)
	203010M	Pinion Gear 10” (254mm)
	203012M	Pinion Gear 12” (305mm)
11	See Chart Below	Side Rail RH 8–24” Wide (203–610mm)
12	See Chart Below	Side Rail LH 8–24” Wide (203–610mm)
13	See Chart Below	Center Rail 8–12” Wide (203–305mm)

14	See Chart Below	Bed Plate
15	450226SSP	Sleeve .25 Magnet Stainless Steel
16	807–1074	Flat Head Screw M4 x 10mm
17	808–020	Magnet .25” DIA x .25” Long
18	920691M	Socket Head Screw M6 x 10mm
19	920692M	Socket Head Screw M6 x 12mm

Item 11: Side Rail RH 8–24” Wide (203–610mm)	
Length	Part Number
2’ (610mm)	240412–01908
3’ (914mm)	240412–03108
4’ (1219mm)	240412–04308
5’ (1524mm)	240412–05508
6’ (1829mm)	240412–06708
7’ (2134mm)	240412–07908
8’ (2438mm)	240412–09108
9’ (2743mm)	240412–10308
10’ (3048mm)	240412–11508
11’ (3353mm)	240412–12708
12’ (3658mm)	240412–13908
13’ (3962mm)	240412–07200 240412–07908
14’ (4267mm)	240412–07200 240412–09108
15’ (4572mm)	240412–07200 240412–10308
16’ (4877mm)	240412–07200 240412–11508
17’ (5182mm)	240412–07200 240412–12708
18’ (5486mm)	240412–07200 240412–13908

Item 12: Side Rail LH 8–24” Wide (203–610mm)	
Length	Part Number
2’ (610mm)	240413–01908
3’ (914mm)	240413–03108
4’ (1219mm)	240413–04308
5’ (1524mm)	240413–05508
6’ (1829mm)	240413–06708
7’ (2134mm)	240413–07908
8’ (2438mm)	240413–09108
9’ (2743mm)	240413–10308
10’ (3048mm)	240413–11508
11’ (3353mm)	240413–12708
12’ (3658mm)	240413–13908
13’ (3962mm)	240413–07200 240413–07908
14’ (4267mm)	240413–07200 240413–09108
15’ (4572mm)	240413–07200 240413–10308
16’ (4877mm)	240413–07200 240413–11508
17’ (5182mm)	240413–07200 240413–12708
18’ (5486mm)	240413–07200 240413–13908

Item 13: Center Rail 8–12” Wide (203–305mm)	
Length	Part Number
2’ (610mm)	240414–01273
3’ (914mm)	240414–02473
4’ (1219mm)	240414–03673
5’ (1524mm)	240414–04873
6’ (1829mm)	240414–06073
7’ (2134mm)	240414–07273
8’ (2438mm)	240414–08473
9’ (2743mm)	240414–09673
10’ (3048mm)	240414–10873
11’ (3353mm)	240414–12073
12’ (3658mm)	240414–13273
13’ (3962mm)	240414–07200 240414–07273
14’ (4267mm)	240414–07200 240414–08473
15’ (4572mm)	240414–07200 240414–09673
16’ (4877mm)	240414–07200 240414–10873
17’ (5182mm)	240414–07200 240414–12073
18’ (5486mm)	240414–07200 240414–13273

Item 14: Bed Plate	
Length	Part Number
2’ (610mm)	2405WW–01904
3’ (914mm)	2405WW–03104
4’ (1219mm)	2405WW–04304
5’ (1524mm)	2405WW–05504
6’ (1829mm)	2405WW–06704
7’ (2134mm)	2405WW–07904
8’ (2438mm)	2405WW–09104
9’ (2743mm)	2405WW–10304
10’ (3048mm)	2405WW–11504
11’ (3353mm)	2405WW–12704
12’ (3658mm)	2405WW–13904
13’ (3962mm)	2405WW–07196 2405WW–07904
14’ (4267mm)	2405WW–07196 2405WW–09104
15’ (4572mm)	2405WW–07196 2405WW–10304
16’ (4877mm)	2405WW–07196 2405WW–11504
17’ (5182mm)	2405WW–07196 2405WW–12704
18’ (5486mm)	2405WW–07196 2405WW–13904
WW = Conveyor Width reference: 08, 10, 12	

18” (457mm) to 24” (610mm)
Wide Conveyor Assembly

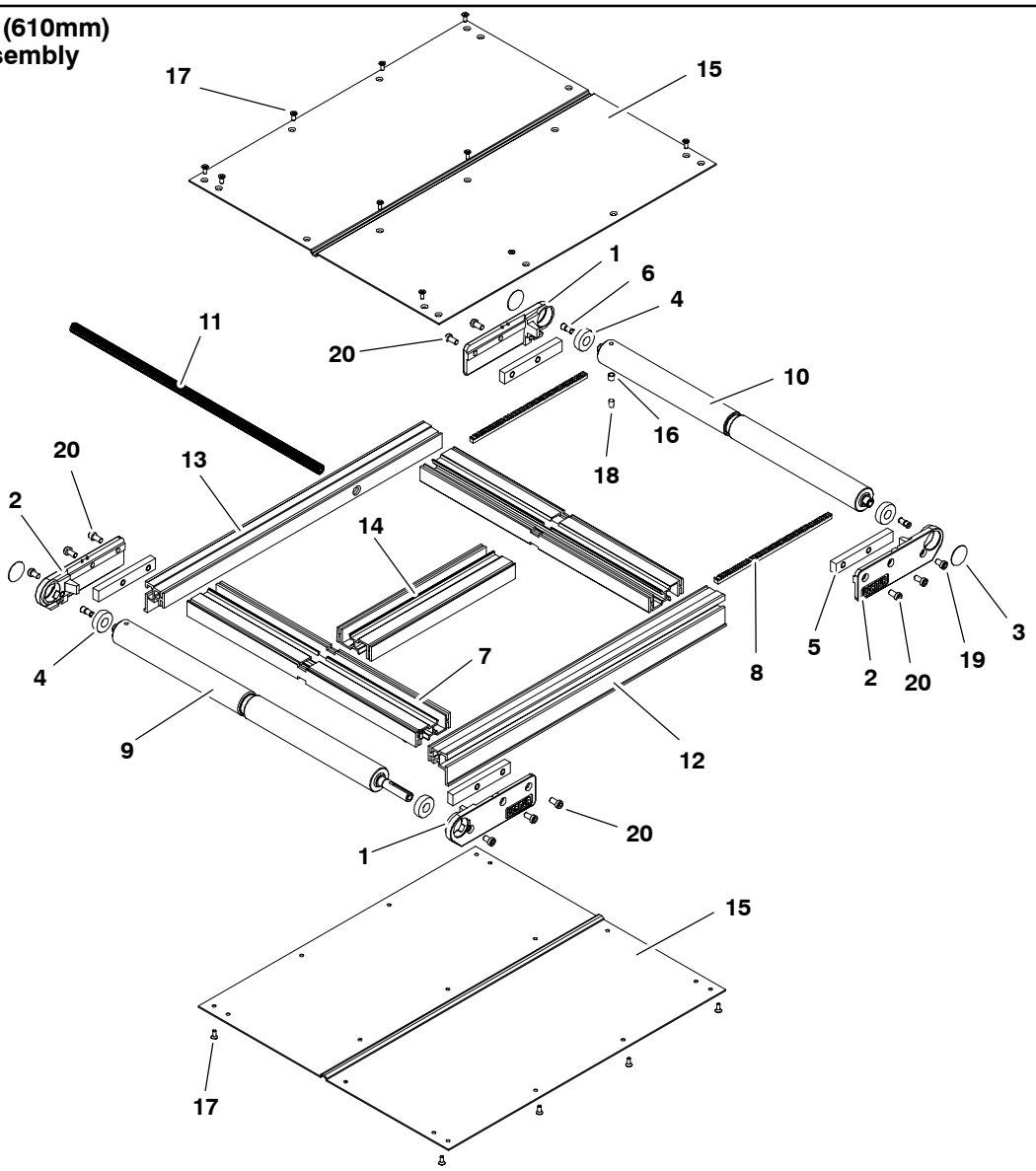

Item	Part Number	Description
1	240325	Head Plate LH
2	240326	Head Plate RH
3	240327	Bearing Cover Disk
4	240328	Bearing
5	240329	Tension Slide Bar
6	240330	Taper Screw
7	240417	Center Rail Cross Support 18” (457mm)
	240418	Center Rail Cross Support 21” (533mm)
	240419	Center Rail Cross Support 24” (610mm)
8	240420	Rack Gear 14.5 PA x 24P
9	240618	Drive Spindle 18” (457mm)
	240621	Drive Spindle 21” (533mm)
	240624	Drive Spindle 24” (610mm)

10	240718	Idler Spindle 18” (457mm)
	240721	Idler Spindle 21” (533mm)
	240724	Idler Spindle 24” (610mm)
11	203018M	Pinion Gear 18” (457mm)
	203021M	Pinion Gear 21” (533mm)
	203024M	Pinion Gear 24” (610mm)
12	See Chart Below	Side Rail RH 8–24” Wide (203–610mm)
13	See Chart Below	Side Rail LH 8–24” Wide (203–610mm)
14	See Chart Below	Center Rail 8–12” Wide (203–305mm)
15	See Chart Below	Bed Plate
16	450226SSP	Sleeve .25 Magnet Stainless Steel

17	807–1074	Flat Head Screw M4 x 10mm
18	808–020	Magnet .25” DIA x .25” Long
19	920691M	Socket Head Screw M6 x 10mm
20	920692M	Socket Head Screw M6 x 12mm

Item 12: Side Rail RH 8–24” Wide (203–610mm)	
Length	Part Number
2’ (610mm)	240412–01908
3’ (914mm)	240412–03108
4’ (1219mm)	240412–04308
5’ (1524mm)	240412–05508
6’ (1829mm)	240412–06708
7’ (2134mm)	240412–07908
8’ (2438mm)	240412–09108
9’ (2743mm)	240412–10308
10’ (3048mm)	240412–11508
11’ (3353mm)	240412–12708
12’ (3658mm)	240412–13908
13’ (3962mm)	240412–07200 240412–07908
14’ (4267mm)	240412–07200 240412–09108
15’ (4572mm)	240412–07200 240412–10308
16’ (4877mm)	240412–07200 240412–11508
17’ (5182mm)	240412–07200 240412–12708
18’ (5486mm)	240412–07200 240412–13908

Item 13: Side Rail LH 8–24” Wide (203–610mm)	
Length	Part Number
2’ (610mm)	240413–01908
3’ (914mm)	240413–03108
4’ (1219mm)	240413–04308
5’ (1524mm)	240413–05508
6’ (1829mm)	240413–06708
7’ (2134mm)	240413–07908
8’ (2438mm)	240413–09108
9’ (2743mm)	240413–10308
10’ (3048mm)	240413–11508
11’ (3353mm)	240413–12708
12’ (3658mm)	240413–13908
13’ (3962mm)	240413–07200 240413–07908
14’ (4267mm)	240413–07200 240413–09108
15’ (4572mm)	240413–07200 240413–10308
16’ (4877mm)	240413–07200 240413–11508
17’ (5182mm)	240413–07200 240413–12708
18’ (5486mm)	240413–07200 240413–13908

Item 14: Center Rail 8–12” Wide (203–305mm)	
Length	Part Number
2’ (610mm)	240414–00998
3’ (914mm)	240414–02198
4’ (1219mm)	240414–03398
5’ (1524mm)	240414–04498
6’ (1829mm)	240414–05798
7’ (2134mm)	240414–06998
8’ (2438mm)	240414–08198
9’ (2743mm)	240414–09398
10’ (3048mm)	240414–10598
11’ (3353mm)	240414–11798
12’ (3658mm)	240414–12998
13’ (3962mm)	240414–06700 240414–06998
14’ (4267mm)	240414–06700 240414–08198
15’ (4572mm)	240414–06700 240414–09398
16’ (4877mm)	240414–06700 240414–10598
17’ (5182mm)	240414–06700 240414–11798
18’ (5486mm)	240414–06700 240414–12998

Item 15: Bed Plate	
Length	Part Number
2’ (610mm)	2405WW–01904
3’ (914mm)	2405WW–03104
4’ (1219mm)	2405WW–04304
5’ (1524mm)	2405WW–05504
6’ (1829mm)	2405WW–06704
7’ (2134mm)	2405WW–07904
8’ (2438mm)	2405WW–09104
9’ (2743mm)	2405WW–10304
10’ (3048mm)	2405WW–11504
11’ (3353mm)	2405WW–12704
12’ (3658mm)	2405WW–13904
13’ (3962mm)	2405WW–07196 2405WW–07904
14’ (4267mm)	2405WW–07196 2405WW–09104
15’ (4572mm)	2405WW–07196 2405WW–10304
16’ (4877mm)	2405WW–07196 2405WW–11504
17’ (5182mm)	2405WW–07196 2405WW–12704
18’ (5486mm)	2405WW–07196 2405WW–13904
WW = Conveyor Width reference: 08, 10, 12	

Nosebar End Assembly 2” (51mm) to 24” (610mm) Wide

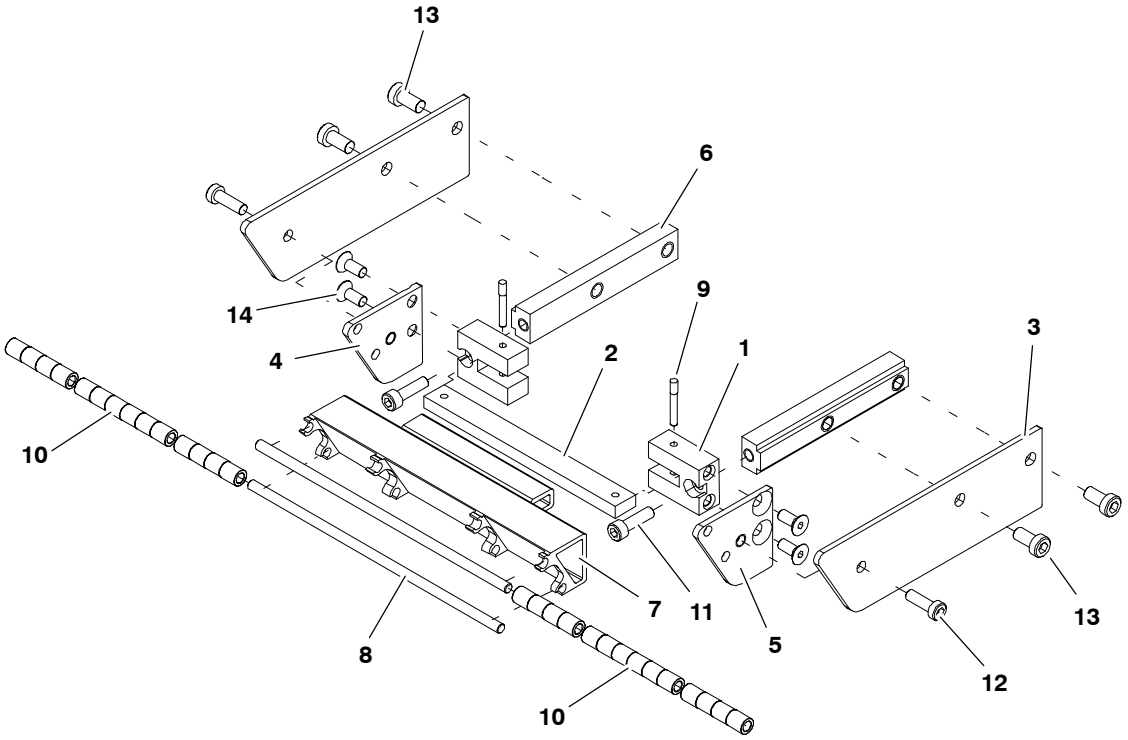

Item	Part Number	Description
1	201965	Mounting Block, PLT Spindle
2	207602	Flex–Link Bar 2” (51mm)
	207603	Flex–Link Bar 3” (76mm)
	207604	Flex–Link Bar 4” (102mm)
	207605	Flex–Link Bar 5” (127mm)
	207606	Flex–Link Bar 6” (152mm)
	207608	Flex–Link Bar 8” (203mm)
	207610	Flex–Link Bar 10” (254mm)
	207612	Flex–Link Bar 12” (305mm)
	207618	Flex–Link Bar 18” (457mm)
	207621	Flex–Link Bar 21” (533mm)
	207624	Flex–Link Bar 24” (610mm)
3	241125	Outer Side Plate
4	241126	Inner Side Plate LH
5	241127	Inner Side Plate RH
6	241128	Head Plate Bar
7	241202	Nosebar 2” (51mm)
	241203	Nosebar 3” (76mm)
	241204	Nosebar 4” (102mm)
	241205	Nosebar 5” (127mm)
	241206	Nosebar 6” (152mm)
	241208	Nosebar 8” (203mm)
	241210	Nosebar 10” (254mm)
	241212	Nosebar 12” (305mm)
	241218	Nosebar 18” (457mm)
	241221	Nosebar 21” (533mm)
	241224	Nosebar 24” (610mm)
8	241302	Nosebar Rod 2” (51mm)
	241303	Nosebar Rod 3” (76mm)
	241304	Nosebar Rod 4” (102mm)
	241305	Nosebar Rod 5” (127mm)
	241306	Nosebar Rod 6” (152mm)
	241308	Nosebar Rod 8” (203mm)
	241310	Nosebar Rod 10” (254mm)
	241312	Nosebar Rod 12” (305mm)
	241318	Nosebar Rod 18” (457mm)
	241321	Nosebar Rod 21” (533mm)
	241324	Nosebar Rod 24” (610mm)
9	200695P	Knurl Pin .125” DIA x .937” Lg
10	801–122	Nose Bar Roller
11	920518M	Sockety Head Screw M5 x 18mm
12	920593M	Socket Head Screw M5 x 16mm
13	920692M	Socket Head Screw M6 x 12mm
14	930512M	Flat Head Screw M5 x 12mm

–04 3” (76mm) Aluminum Side

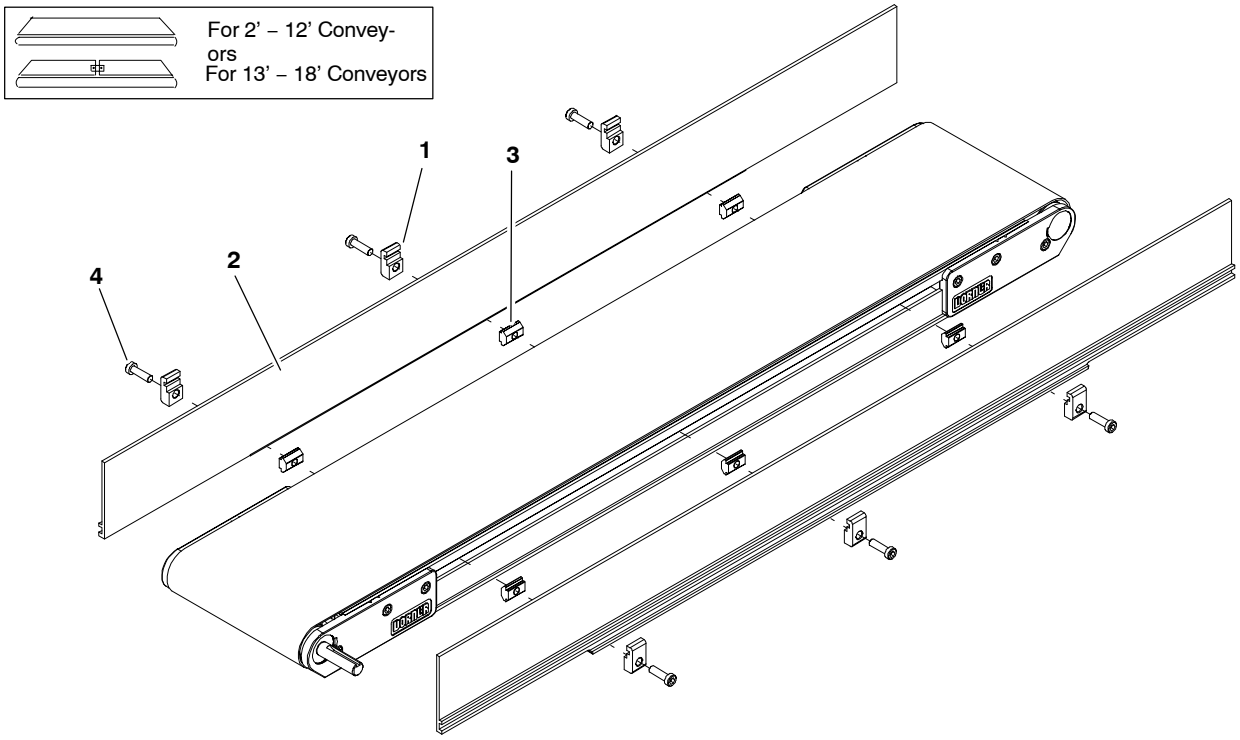

Item	Part Number	Description
1	200121	Guide Retaining Clip
2	See Chart Below	2200 Guide 3” (76mm) HS
3	200695P	Single Drop–in Tee Bar
4	920694M	Socket Head Screw M6 x 20mm

Item 2: 2200 Guide 3” (76mm) HS			
Length		End Guide	End Guide
2’ (610mm)	Left Hand	280403–02400	N/A
	Right Hand	280403–02400	N/A
3’ (914mm)	Left Hand	280403–03600	N/A
	Right Hand	280403–03600	N/A
4’ (1219mm)	Left Hand	280403–04800	N/A
	Right Hand	280403–04800	N/A
5’ (1524mm)	Left Hand	280403–06000	N/A
	Right Hand	280403–06000	N/A
6’ (1829mm)	Left Hand	280403–07200	N/A
	Right Hand	280403–07200	N/A
7’ (2134mm)	Left Hand	280403–08400	N/A
	Right Hand	280403–08400	N/A
8’ (2438mm)	Left Hand	280403–09600	N/A
	Right Hand	280403–09600	N/A
9’ (2743mm)	Left Hand	280403–10800	N/A
	Right Hand	280403–10800	N/A
10’ (3048mm)	Left Hand	280403–12000	N/A
	Right Hand	280403–12000	N/A
11’ (3353mm)	Left Hand	280403–13200	N/A
	Right Hand	280403–13200	N/A
12’ (3658mm)	Left Hand	280403–14400	N/A
	Right Hand	280403–14400	N/A
13’ (3962mm)	Left Hand	280401–07500	280401–08100
	Right Hand	280402–07500	280402–08100
14’ (4267mm)	Left Hand	280401–07500	280401–09300
	Right Hand	280402–07500	280402–09300
15’ (4572mm)	Left hand	280401–07500	280401–10500
	Right Hand	280402–07500	280402–10500
16’ (4877mm)	Left Hand	280401–07500	280401–11700
	Right Hand	280402–07500	280402–11700
17’ (5182mm)	Left Hand	280401–07500	280401–12900
	Right Hand	280402–07500	280402–12900
18’ (5486mm)	Left Hand	280401–07500	280401–14100
	Right Hand	280402–07500	280402–14100

Service Parts

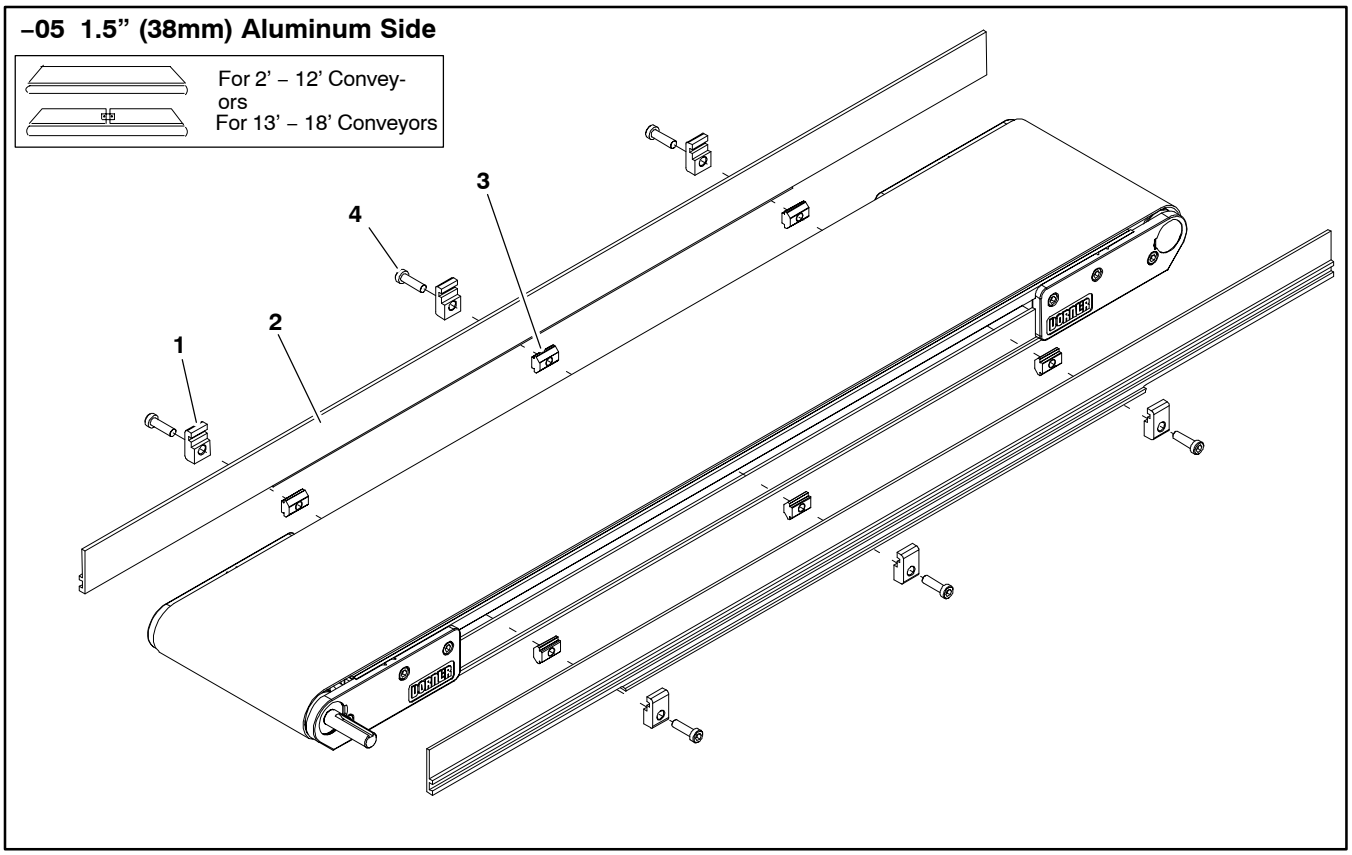

Item	Part Number	Description
1	200121	Guide Retaining Clip
2	See Chart Below	2200 Guide .5” (13mm) HS
3	639971M	Single Drop–in Tee Bar
4	920694M	Socket Head Screw M6 x 20mm

Item 2: 2200 Guide .5” (13mm) HS			
Length		End Guide	End Guide
2’ (610mm)	Left Hand	280503–02400	N/A
	Right Hand	280503–02400	N/A
3’ (914mm)	Left Hand	280503–03600	N/A
	Right Hand	280503–03600	N/A
4’ (1219mm)	Left Hand	280503–04800	N/A
	Right Hand	280503–04800	N/A
5’ (1524mm)	Left Hand	280503–06000	N/A
	Right Hand	280503–06000	N/A
6’ (1829mm)	Left Hand	280503–07200	N/A
	Right Hand	280503–07200	N/A
7’ (2134mm)	Left Hand	280503–08400	N/A
	Right Hand	280503–08400	N/A
8’ (2438mm)	Left Hand	280503–09600	N/A
	Right Hand	280503–09600	N/A
9’ (2743mm)	Left Hand	280503–10800	N/A
	Right Hand	280503–10800	N/A
10’ (3048mm)	Left Hand	280503–12000	N/A
	Right Hand	280503–12000	N/A
11’ (3353mm)	Left Hand	280503–13200	N/A
	Right Hand	280503–13200	N/A
12’ (3658mm)	Left Hand	280503–14400	N/A
	Right Hand	280503–14400	N/A
13’ (3962mm)	Left Hand	280501–07500	280501–08100
	Right Hand	280502–07500	280502–08100
14’ (4267mm)	Left Hand	280501–07500	280501–09300
	Right Hand	280502–07500	280502–09300
15’ (4572mm)	Left hand	280501–07500	280501–10500
	Right Hand	280502–07500	280502–10500
16’ (4877mm)	Left Hand	280501–07500	280501–11700
	Right Hand	280502–07500	280502–11700
17’ (5182mm)	Left Hand	280501–07500	280501–12900
	Right Hand	280502–07500	280502–12900
18’ (5486mm)	Left Hand	280501–07500	280501–14100
	Right Hand	280502–07500	280502–14100

–07 Low to Side Wiper

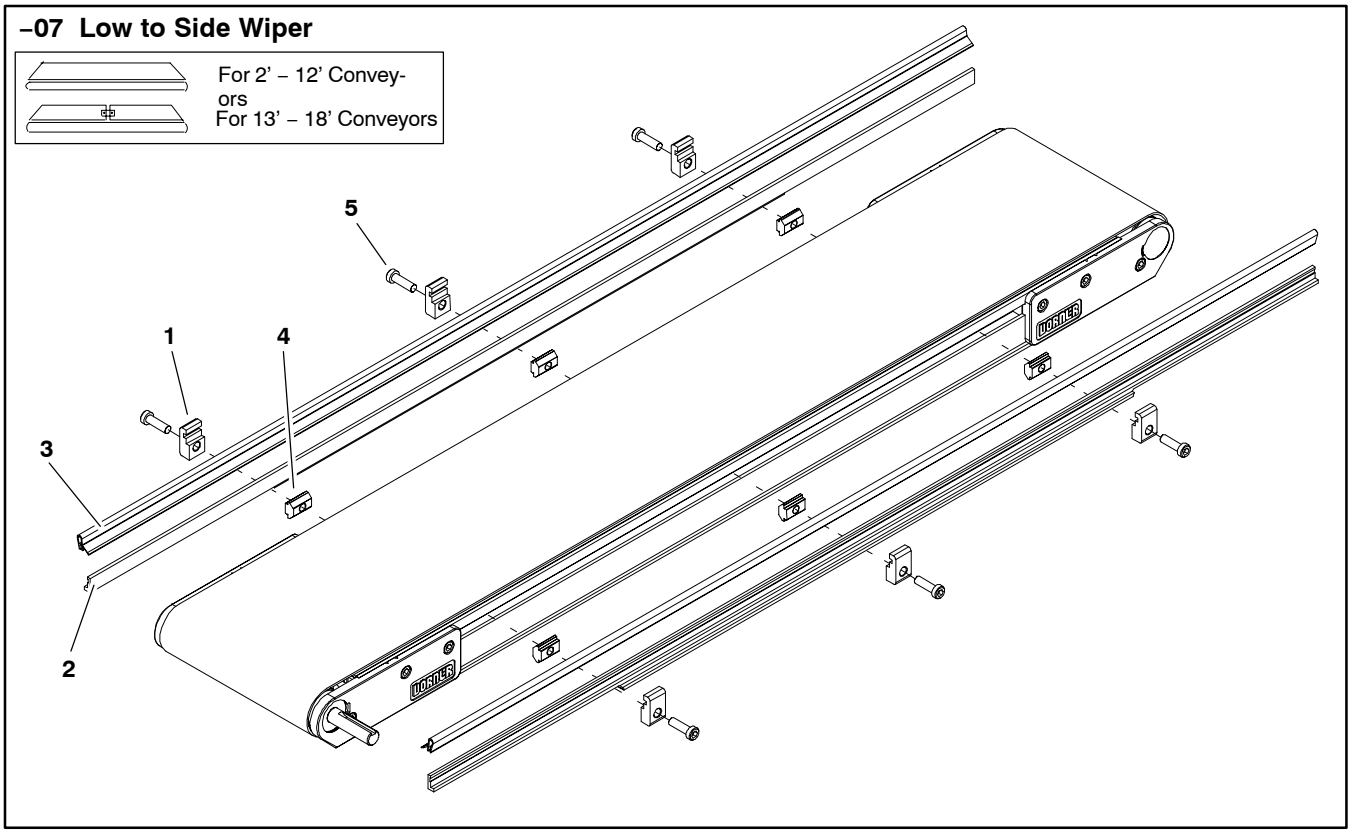

Item	Part Number	Description
1	200121	Guide Retaining Clip
2	See Chart Below	2200 Guide .5" (13mm) HS
3	41–00–24	Side Wiper Nylatron (per foot)
4	639971M	Single Drop–in Tee Bar
5	920694M	Socket Head Screw M6 x 20mm

Item 2: 2200 Guide .5" (13mm) HS			
Length		End Guide	End Guide
2' (610mm)	Left Hand	280903–02400	N/A
	Right Hand	280903–02400	N/A
3' (914mm)	Left Hand	280903–03600	N/A
	Right Hand	280903–03600	N/A
4' (1219mm)	Left Hand	280903–04800	N/A
	Right Hand	280903–04800	N/A
5' (1524mm)	Left Hand	280903–06000	N/A
	Right Hand	280903–06000	N/A
6' (1829mm)	Left Hand	280903–07200	N/A
	Right Hand	280903–07200	N/A
7' (2134mm)	Left Hand	280903–08400	N/A
	Right Hand	280903–08400	N/A
8' (2438mm)	Left Hand	280903–09600	N/A
	Right Hand	280903–09600	N/A
9' (2743mm)	Left Hand	280903–10800	N/A
	Right Hand	280903–10800	N/A
10' (3048mm)	Left Hand	280903–12000	N/A
	Right Hand	280903–12000	N/A
11' (3353mm)	Left Hand	280903–13200	N/A
	Right Hand	280903–13200	N/A
12' (3658mm)	Left Hand	280903–14400	N/A
	Right Hand	280903–14400	N/A
13' (3962mm)	Left Hand	280901–07500	280901–08100
	Right Hand	280902–07500	280902–08100
14' (4267mm)	Left Hand	280901–07500	280901–09300
	Right Hand	280902–07500	280902–09300
15' (4572mm)	Left hand	280901–07500	280901–10500
	Right Hand	280902–07500	280902–10500
16' (4877mm)	Left Hand	280901–07500	280901–11700
	Right Hand	280902–07500	280902–11700
17' (5182mm)	Left Hand	280901–07500	280901–12900
	Right Hand	280902–07500	280902–12900
18' (5486mm)	Left Hand	280901–07500	280901–14100
	Right Hand	280902–07500	280902–14100

Service Parts

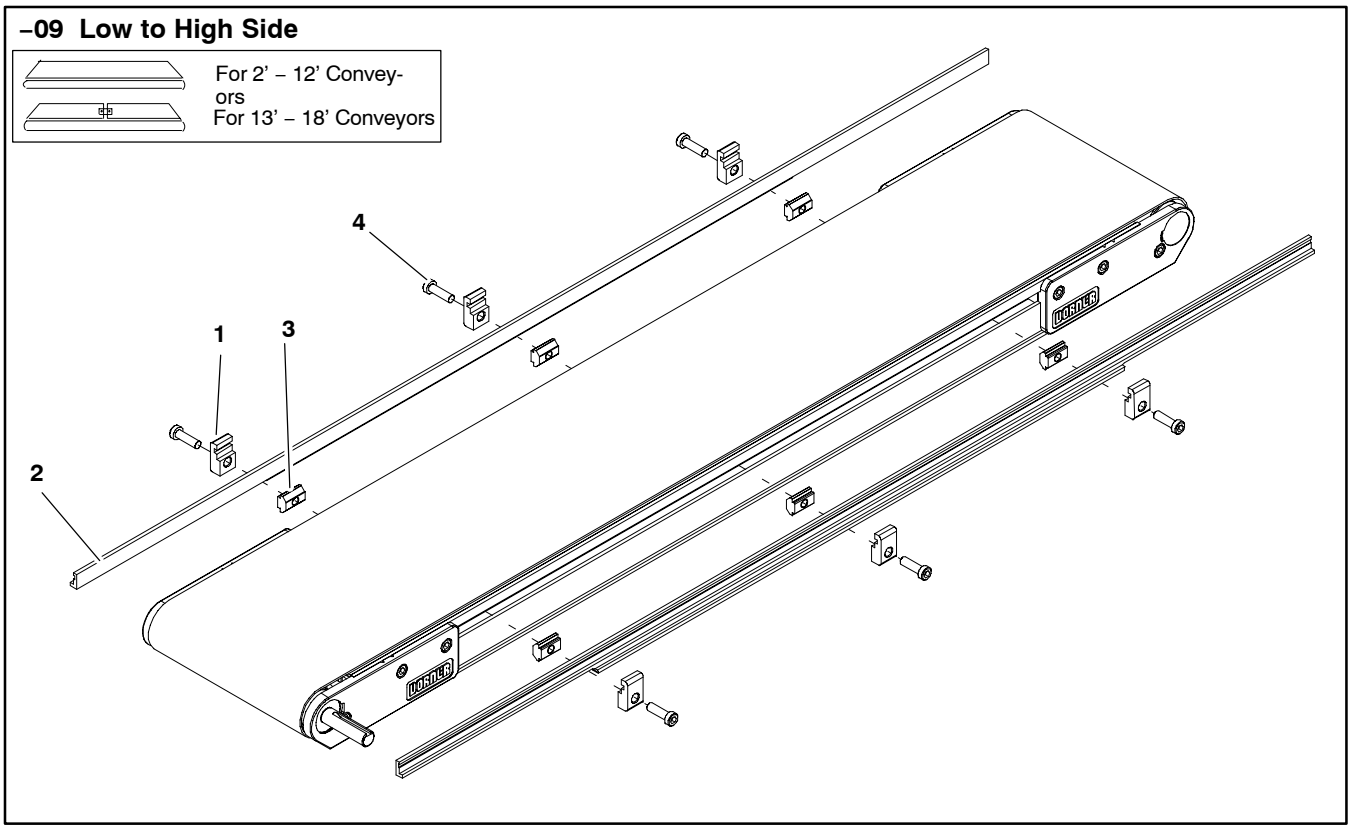

Item	Part Number	Description
1	200121	Guide Retaining Clip
2	See Chart Below	2200 Guide .5" (13mm) HS
3	639971M	Single Drop–in Tee Bar
4	920694M	Socket Head Screw M6 x 20mm

Item 2: 2200 Guide .5" (13mm) HS			
Length		End Guide	End Guide
2' (610mm)	Left Hand	280903–02400	N/A
	Right Hand	280903–02400	N/A
3' (914mm)	Left Hand	280903–03600	N/A
	Right Hand	280903–03600	N/A
4' (1219mm)	Left Hand	280903–04800	N/A
	Right Hand	280903–04800	N/A
5' (1524mm)	Left Hand	280903–06000	N/A
	Right Hand	280903–06000	N/A
6' (1829mm)	Left Hand	280903–07200	N/A
	Right Hand	280903–07200	N/A
7' (2134mm)	Left Hand	280903–08400	N/A
	Right Hand	280903–08400	N/A
8' (2438mm)	Left Hand	280903–09600	N/A
	Right Hand	280903–09600	N/A
9' (2743mm)	Left Hand	280903–10800	N/A
	Right Hand	280903–10800	N/A
10' (3048mm)	Left Hand	280903–12000	N/A
	Right Hand	280903–12000	N/A
11' (3353mm)	Left Hand	280903–13200	N/A
	Right Hand	280903–13200	N/A
12' (3658mm)	Left Hand	280903–14400	N/A
	Right Hand	280903–14400	N/A
13' (3962mm)	Left Hand	280901–07500	280901–08100
	Right Hand	280902–07500	280902–08100
14' (4267mm)	Left Hand	280901–07500	280901–09300
	Right Hand	280902–07500	280902–09300
15' (4572mm)	Left hand	280901–07500	280901–10500
	Right Hand	280902–07500	280902–10500
16' (4877mm)	Left Hand	280901–07500	280901–11700
	Right Hand	280902–07500	280902–11700
17' (5182mm)	Left Hand	280901–07500	280901–12900
	Right Hand	280902–07500	280902–12900
18' (5486mm)	Left Hand	280901–07500	280901–14100
	Right Hand	280902–07500	280902–14100

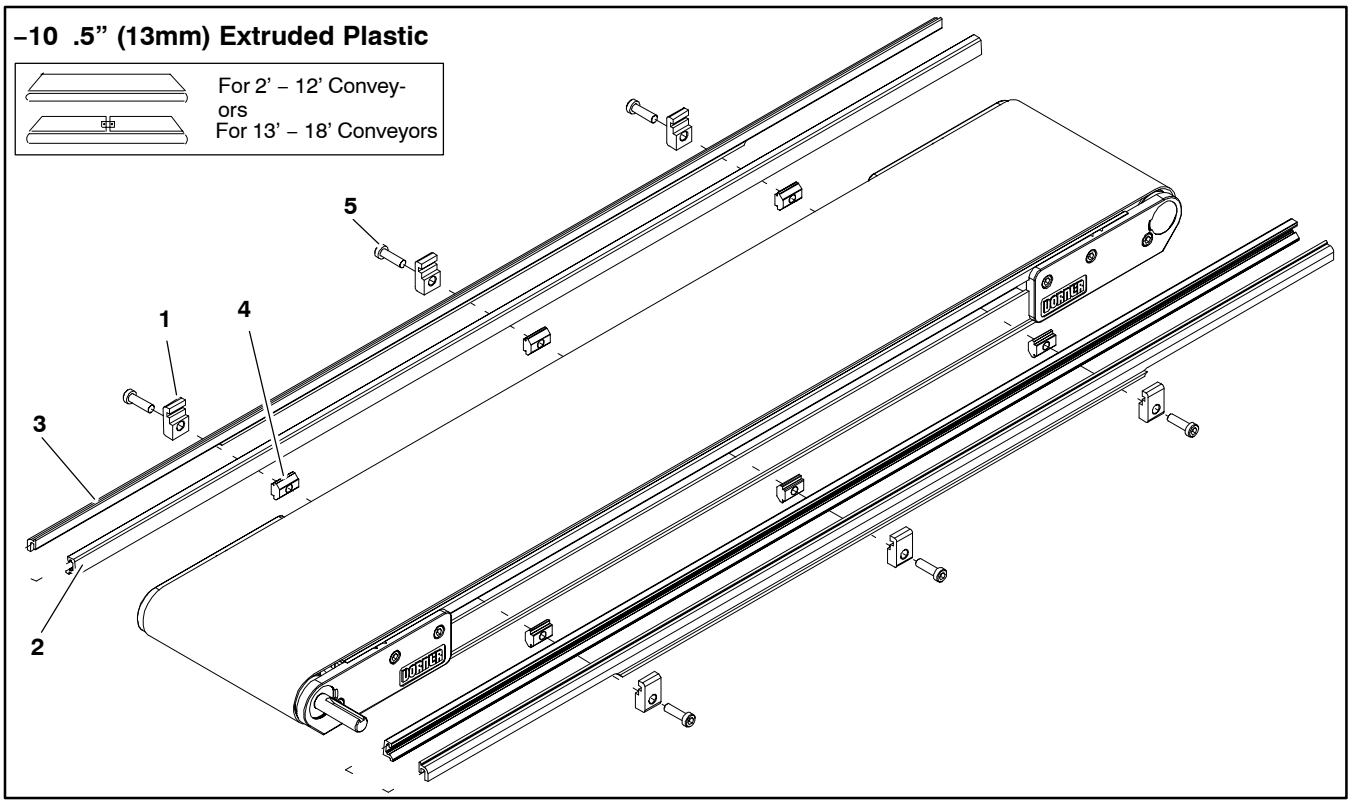

Item	Part Number	Description
1	200121	Guide Retaining Clip
2	200054P	Snap–On Guide (per foot)
3	See Chart Below	2200 Guide
4	639971M	Single Drop–in Tee Bar
5	920694M	Socket Head Screw M6 x 20mm

Item 3: 2200 Guide			
Length		End Guide	End Guide
2’ (610mm)	Left Hand	281003–02400	N/A
	Right Hand	281003–02400	N/A
3’ (914mm)	Left Hand	281003–03600	N/A
	Right Hand	281003–03600	N/A
4’ (1219mm)	Left Hand	281003–04800	N/A
	Right Hand	281003–04800	N/A
5’ (1524mm)	Left Hand	281003–06000	N/A
	Right Hand	281003–06000	N/A
6’ (1829mm)	Left Hand	281003–07200	N/A
	Right Hand	281003–07200	N/A
7’ (2134mm)	Left Hand	281003–08400	N/A
	Right Hand	281003–08400	N/A
8’ (2438mm)	Left Hand	281003–09600	N/A
	Right Hand	281003–09600	N/A
9’ (2743mm)	Left Hand	281003–10800	N/A
	Right Hand	281003–10800	N/A
10’ (3048mm)	Left Hand	281003–12000	N/A
	Right Hand	281003–12000	N/A
11’ (3353mm)	Left Hand	281003–13200	N/A
	Right Hand	281003–13200	N/A
12’ (3658mm)	Left Hand	281003–14400	N/A
	Right Hand	281003–14400	N/A
13’ (3962mm)	Left Hand	281001–07500	281001–08100
	Right Hand	281002–07500	281002–08100
14’ (4267mm)	Left Hand	281001–07500	281001–09300
	Right Hand	281002–07500	281002–09300
15’ (4572mm)	Left hand	281001–07500	281001–10500
	Right Hand	281002–07500	281002–10500
16’ (4877mm)	Left Hand	281001–07500	281001–11700
	Right Hand	281002–07500	281002–11700
17’ (5182mm)	Left Hand	281001–07500	281001–12900
	Right Hand	281002–07500	281002–12900
18’ (5486mm)	Left Hand	281001–07500	281001–14100
	Right Hand	281002–07500	281002–14100

–13 Adjustable Guiding

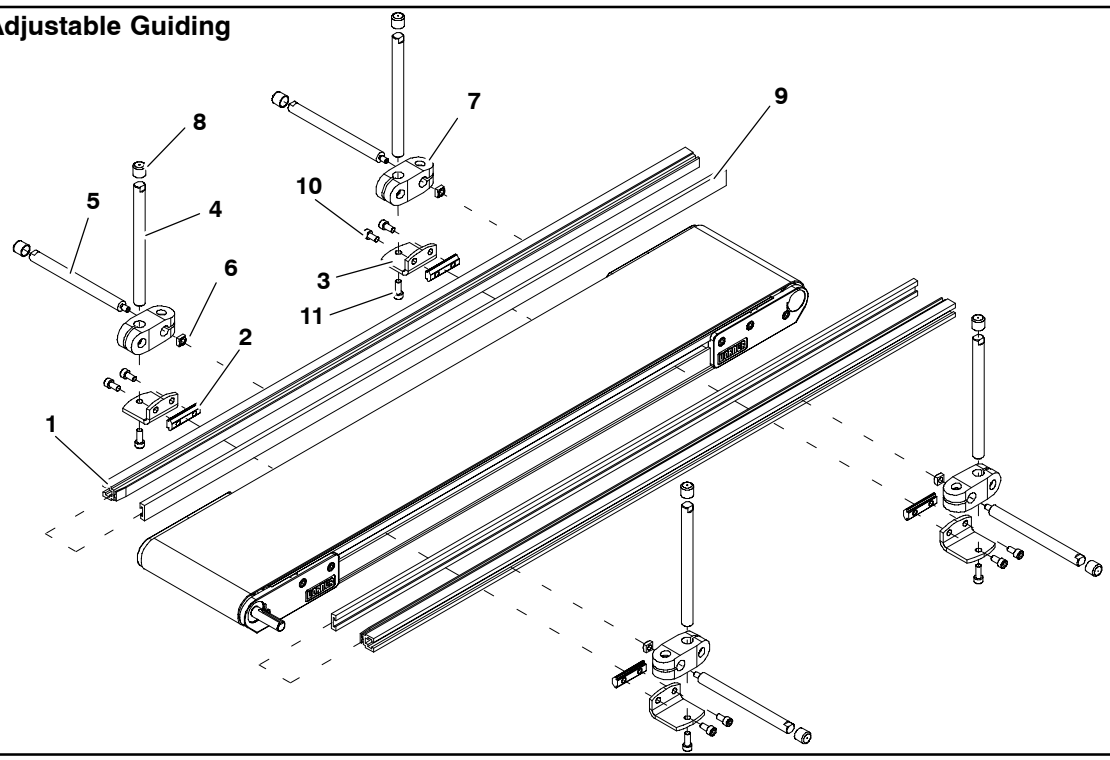

Item	Part Number	Description
1	202983	Aluminum Profile Guide 2’ (610mm)
	202984	Aluminum Profile Guide 3’ (914mm)
	202985	Aluminum Profile Guide 4’ (1219mm)
	202986	Aluminum Profile Guide 5’ (1524mm)
	202987	Aluminum Profile Guide 6’ (1829mm)
	202988	Aluminum Profile Guide 7’ (2134mm)
	202989	Aluminum Profile Guide 8’ (2438mm)
	202990	Aluminum Profile Guide 9’ (2743mm)
	202991	Aluminum Profile Guide 10’ (3048mm)
	202992	Aluminum Profile Guide 11’ (3353mm)
	202993	Aluminum Profile Guide 12’ (3658mm)
	202994	Aluminum Profile Guide 13’ (3962mm)

2	200830M	Drop–In Tee Bar
3	202004	Mounting Bracket
4	202027M	Guide Mounting Shaft Vertical
5	202028M	Guide Moutning Shaft Horizontal
6	674175MP	Square Nut
7	807–652	Cross Block
8	807–948	Vinyl Shaft Cap
9	614068P	Flat Extruded Guide (per foot)
10	920612M	Socket Head Screw M6 x 12mm
11	920616M	Socket Head Screw M6 x 16mm

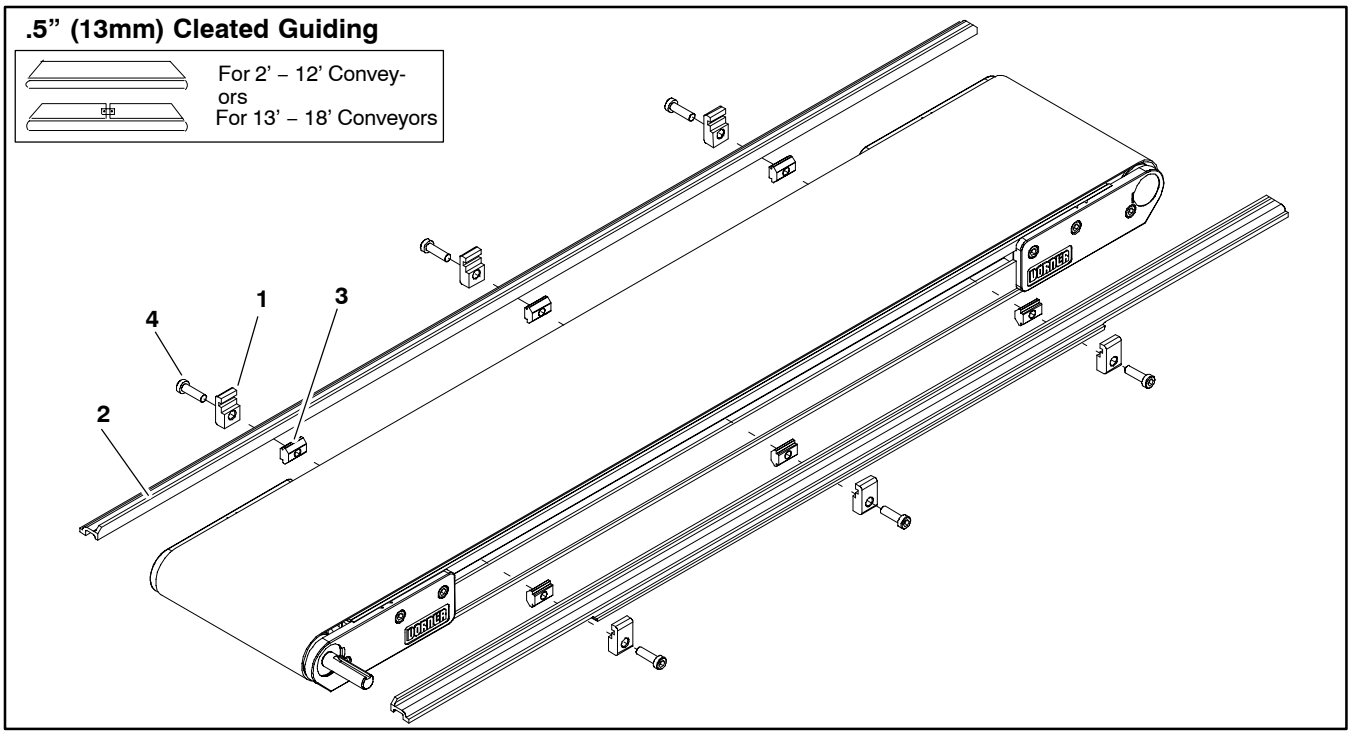

Item	Part Number	Description
1	200121	Guide Retaining Clip
2	See Chart Below	2200 Guide .47” (13mm) Cleated
3	639971M	Drop–In Tee Bar
4	920694M	Socket Head Screw M6 x 20mm

Item 2: 2200 Guide			
Length		End Guide	End Guide
2’ (610mm)	Left Hand	281603–02256	N/A
	Right Hand	281603–02256	N/A
3’ (914mm)	Left Hand	281603–03456	N/A
	Right Hand	281603–03456	N/A
4’ (1219mm)	Left Hand	281603–04656	N/A
	Right Hand	281603–04656	N/A
5’ (1524mm)	Left Hand	281603–05856	N/A
	Right Hand	281603–05856	N/A
6’ (1829mm)	Left Hand	281603–07056	N/A
	Right Hand	281603–07056	N/A
7’ (2134mm)	Left Hand	281603–08256	N/A
	Right Hand	281603–08256	N/A
8’ (2438mm)	Left Hand	281603–09456	N/A
	Right Hand	281603–09456	N/A
9’ (2743mm)	Left Hand	281603–10656	N/A
	Right Hand	281603–10656	N/A
10’ (3048mm)	Left Hand	281603–11856	N/A
	Right Hand	281603–11856	N/A
11’ (3353mm)	Left Hand	281603–13056	N/A
	Right Hand	281603–13056	N/A
12’ (3658mm)	Left Hand	281603–14256	N/A
	Right Hand	281603–14256	N/A
13’ (3962mm)	Left Hand	281601–07428	281601–08028
	Right Hand	281602–07428	281602–08028
14’ (4267mm)	Left Hand	281601–07428	281601–09228
	Right Hand	281602–07428	281602–09228
15’ (4572mm)	Left hand	281601–07428	281601–10428
	Right Hand	281602–07428	281602–10428
16’ (4877mm)	Left Hand	281601–07428	281601–11628
	Right Hand	281602–07428	281602–11628
17’ (5182mm)	Left Hand	281601–07428	281601–12828
	Right Hand	281602–07428	281602–12828
18’ (5486mm)	Left Hand	281601–07428	281601–14028
	Right Hand	281602–07428	281602–14028

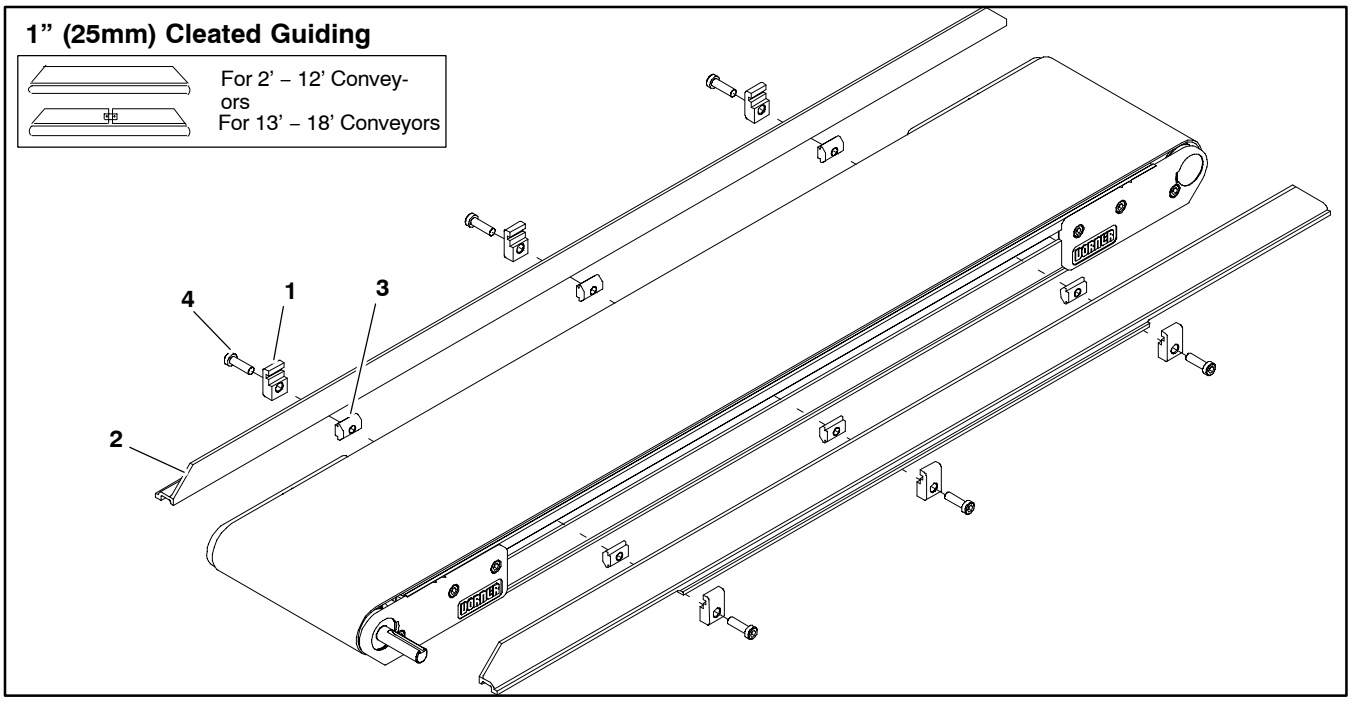

Item	Part Number	Description
1	200121	Guide Retaining Clip
2	See Chart Below	2200 Guide 1” (25mm) Cleated
3	639971M	Drop–In Tee Bar
4	920694M	Socket Head Screw M6 x 20mm

Item 2: 2200 Guide			
Length		End Guide	End Guide
2’ (610mm)	Left Hand	281703–02256	N/A
	Right Hand	281703–02256	N/A
3’ (914mm)	Left Hand	281703–03456	N/A
	Right Hand	281703–03456	N/A
4’ (1219mm)	Left Hand	281703–04656	N/A
	Right Hand	281703–04656	N/A
5’ (1524mm)	Left Hand	281703–05856	N/A
	Right Hand	281703–05856	N/A
6’ (1829mm)	Left Hand	281703–07056	N/A
	Right Hand	281703–07056	N/A
7’ (2134mm)	Left Hand	281703–08256	N/A
	Right Hand	281703–08256	N/A
8’ (2438mm)	Left Hand	281703–09456	N/A
	Right Hand	281703–09456	N/A
9’ (2743mm)	Left Hand	281703–10656	N/A
	Right Hand	281703–10656	N/A
10’ (3048mm)	Left Hand	281703–11856	N/A
	Right Hand	281703–11856	N/A
11’ (3353mm)	Left Hand	281703–13056	N/A
	Right Hand	281703–13056	N/A
12’ (3658mm)	Left Hand	281703–14256	N/A
	Right Hand	281703–14256	N/A
13’ (3962mm)	Left Hand	281701–07428	281701–08028
	Right Hand	281702–07428	281702–08028
14’ (4267mm)	Left Hand	281701–07428	281701–09228
	Right Hand	281702–07428	281702–09228
15’ (4572mm)	Left hand	281701–07428	281701–10428
	Right Hand	281702–07428	281702–10428
16’ (4877mm)	Left Hand	281701–07428	281701–11628
	Right Hand	281702–07428	281702–11628
17’ (5182mm)	Left Hand	281701–07428	281701–12828
	Right Hand	281702–07428	281702–12828
18’ (5486mm)	Left Hand	281701–07428	281701–14028
	Right Hand	281702–07428	281702–14028

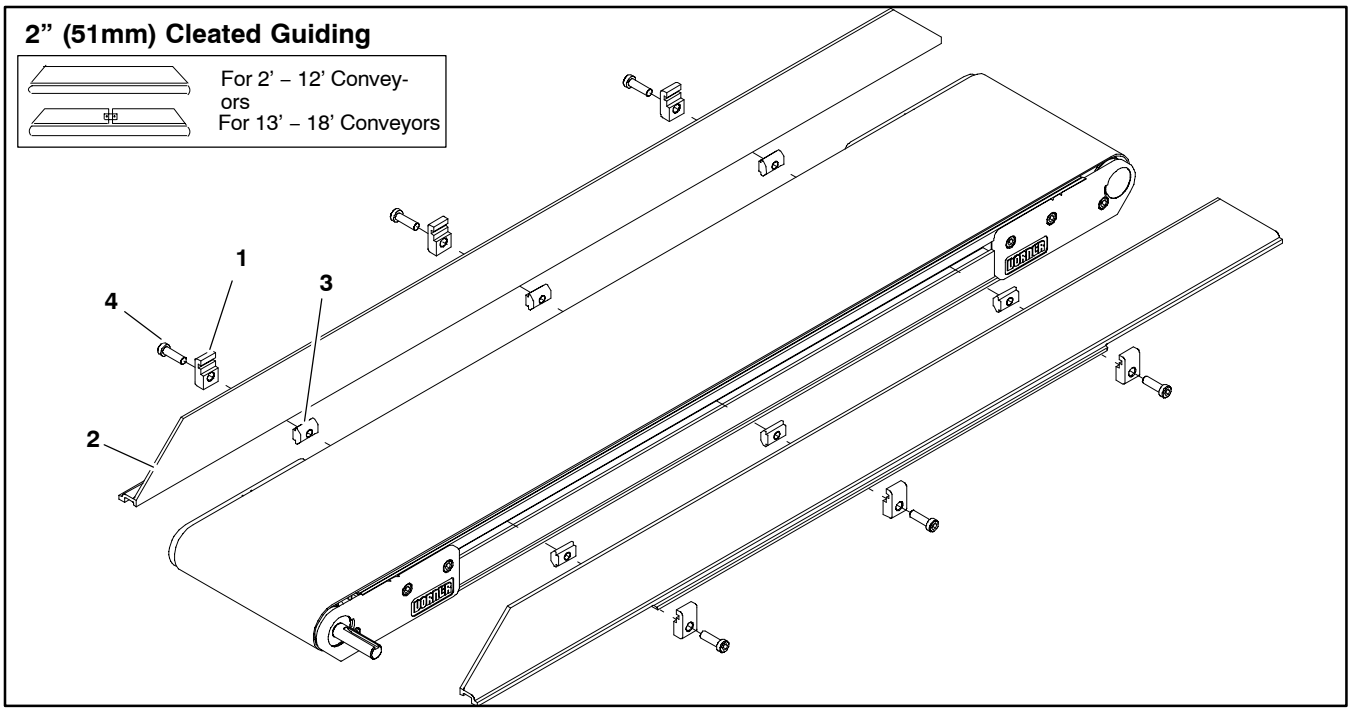

Item	Part Number	Description
1	200121	Guide Retaining Clip
2	See Chart Below	2200 Guide 2.3” Cleated
3	639971M	Drop–In Tee Bar
4	920694M	Socket Head Screw M6 x 20mm

Item 2: 2200 Guide			
Length		End Guide	End Guide
2’ (610mm)	Left Hand	281903–02256	N/A
	Right Hand	281903–02256	N/A
3’ (914mm)	Left Hand	281903–03456	N/A
	Right Hand	281903–03456	N/A
4’ (1219mm)	Left Hand	281903–04656	N/A
	Right Hand	281903–04656	N/A
5’ (1524mm)	Left Hand	281903–05856	N/A
	Right Hand	281903–05856	N/A
6’ (1829mm)	Left Hand	281903–07056	N/A
	Right Hand	281903–07056	N/A
7’ (2134mm)	Left Hand	281903–08256	N/A
	Right Hand	281903–08256	N/A
8’ (2438mm)	Left Hand	281903–09456	N/A
	Right Hand	281903–09456	N/A
9’ (2743mm)	Left Hand	281903–10656	N/A
	Right Hand	281903–10656	N/A
10’ (3048mm)	Left Hand	281903–11856	N/A
	Right Hand	281903–11856	N/A
11’ (3353mm)	Left Hand	281903–13056	N/A
	Right Hand	281903–13056	N/A
12’ (3658mm)	Left Hand	281903–14256	N/A
	Right Hand	281903–14256	N/A
13’ (3962mm)	Left Hand	281901–07428	281901–08028
	Right Hand	281902–07428	281902–08028
14’ (4267mm)	Left Hand	281901–07428	281901–09228
	Right Hand	281902–07428	281902–09228
15’ (4572mm)	Left hand	281901–07428	281901–10428
	Right Hand	281902–07428	281902–10428
16’ (4877mm)	Left Hand	281901–07428	281901–11628
	Right Hand	281902–07428	281902–11628
17’ (5182mm)	Left Hand	281901–07428	281901–12828
	Right Hand	281902–07428	281902–12828
18’ (5486mm)	Left Hand	281901–07428	281901–14028
	Right Hand	281902–07428	281902–14028

Flared Side Guiding

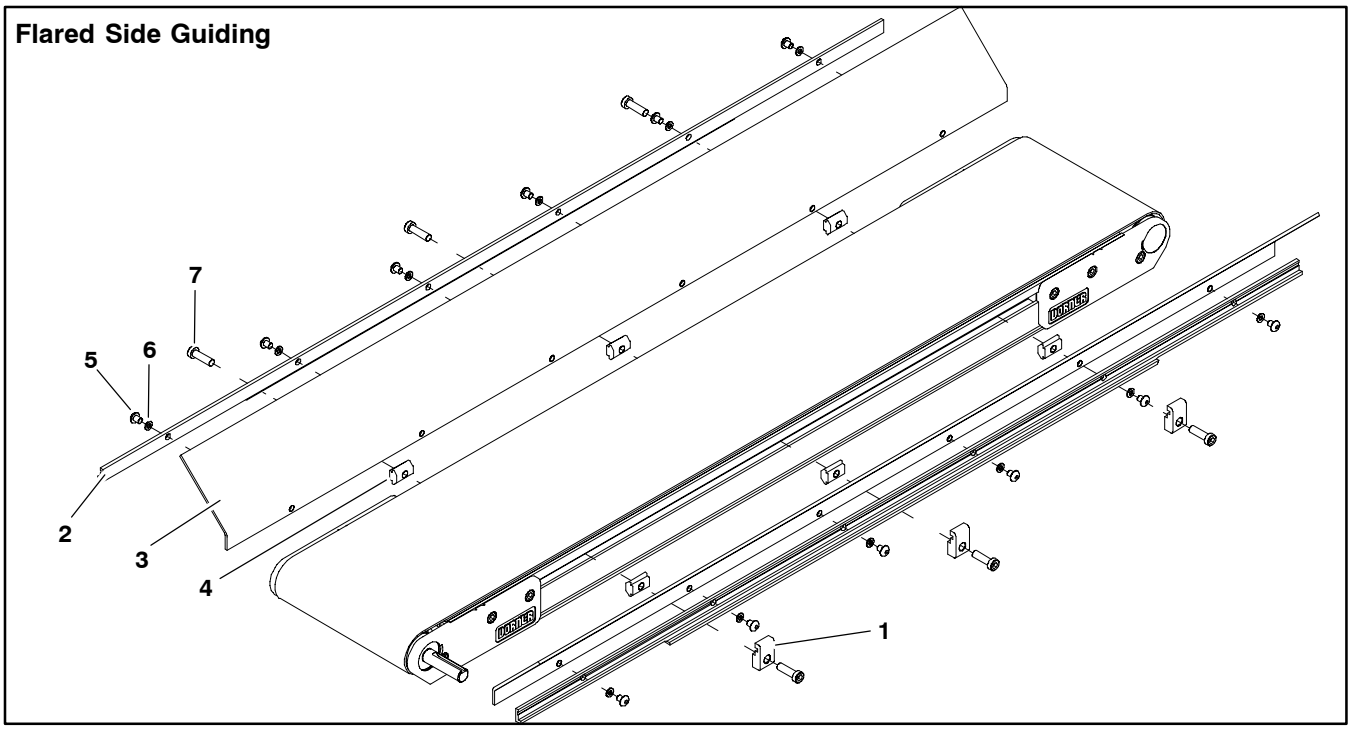

Item	Part Number	Description
1	200121	Guide Retaining Clip
2	202212	Side–Flare Mounting Guide 2’ (610mm)
	202213	Side–Flare Mounting Guide 3’ (914mm)
	202214	Side–Flare Mounting Guide 4’ (1219mm)
	202215	Side–Flare Mounting Guide 5’ (1524mm)
	202216	Side–Flare Mounting Guide 6’ (1829mm)

3	202522M	Flared Guide 45° 2’ (610mm)
	202523M	Flared Guide 45° 3’ (914mm)
	202523M	Flared Guide 45° 4’ (1219mm)
	202523M	Flared Guide 45° 5’ (1524mm)
	202523M	Flared Guide 45° 6’ (1829mm)
4	639971	Drop–In Tee Bar
5	910506M	Button Head Screw M5 x 6mm
6	911–512	Washer
7	920694M	Cap Low–Head Screw M6 x 20mm

Flat Belt Mounting Brackets

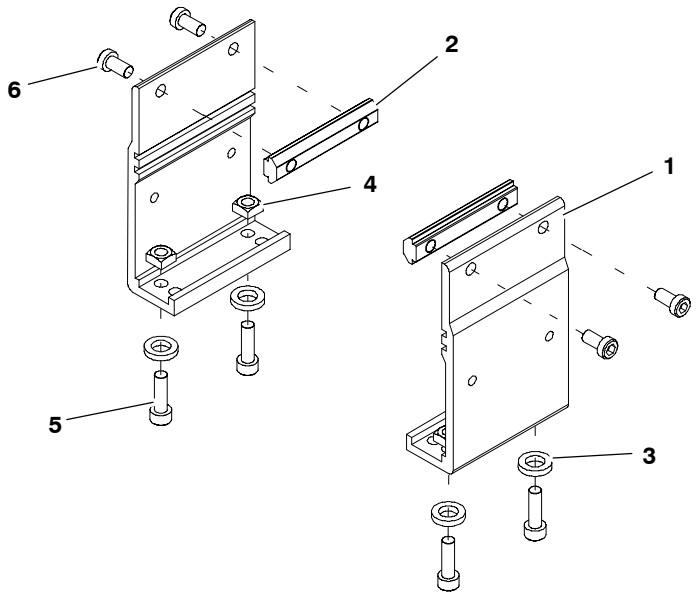

Item	Part Number	Description
1	240831	Stand Mount
2	300150M	Drop–In Tee Bar
3	605279P	Washer
4	807–920	Square Nut M6 5mm x 10mm
5	920620M	Socket Head Screw M6 x 20mm
6	920692M	Socket Head Screw M6 x 12mm

Cleated Belt Mounting Brackets

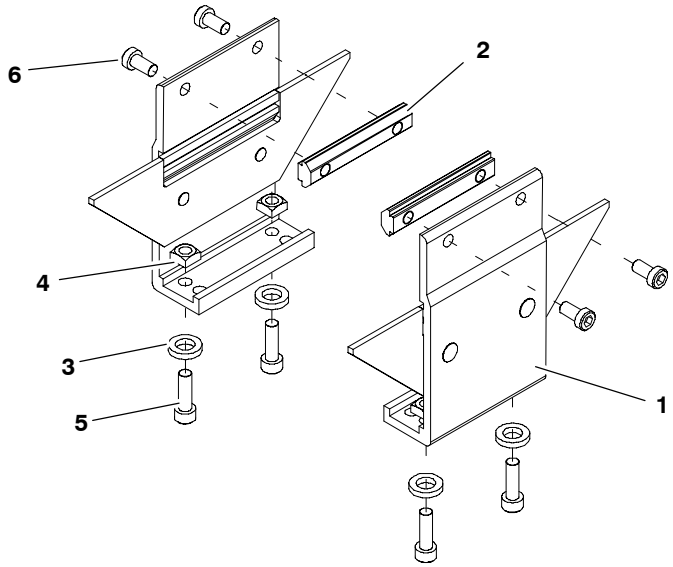

Item	Part Number	Description
1	240836	Cleated Mounting Assembly
2	300150M	Drop–In Tee Bar
3	605279P	Washer
4	807–920	Square Nut M6 5mm x 10mm
5	920620M	Socket Head Screw M6 x 20mm
6	920692M	Socket Head Screw M6 x 12mm

Flat Belt Mounting Brackets for 2' (610mm) Conveyors

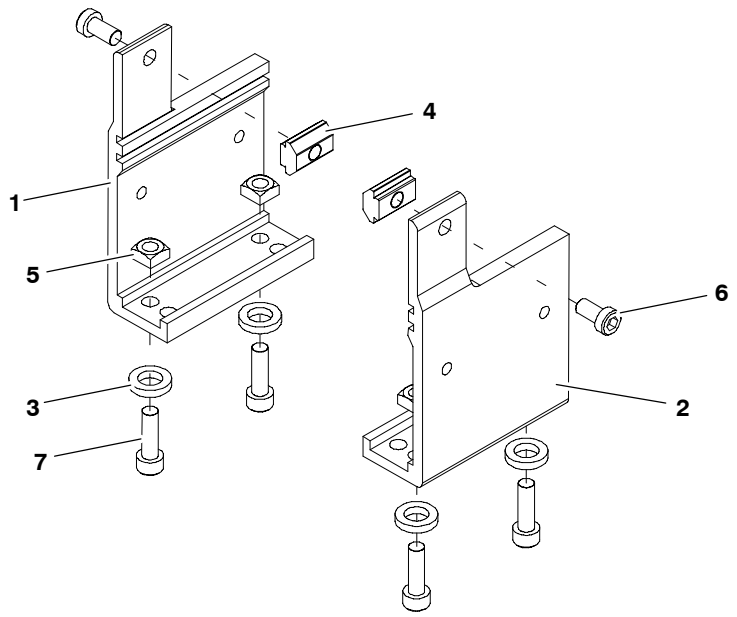

Item	Part Number	Description
1	240833	Stand Mount, LH 2' (610mm)
2	240834	Stand Mount, RH 2' (610mm)
3	605279P	Washer
4	639971M	Drop–In Tee Bar
5	807–920	Square Nut M6 5mm x 10mm
6	920620M	Socket Head Screw M6 x 20mm
7	920692M	Socket Head Screw M6 x 12mm

Cleated Belt Mounting Brackets for 2' (610mm) Conveyors

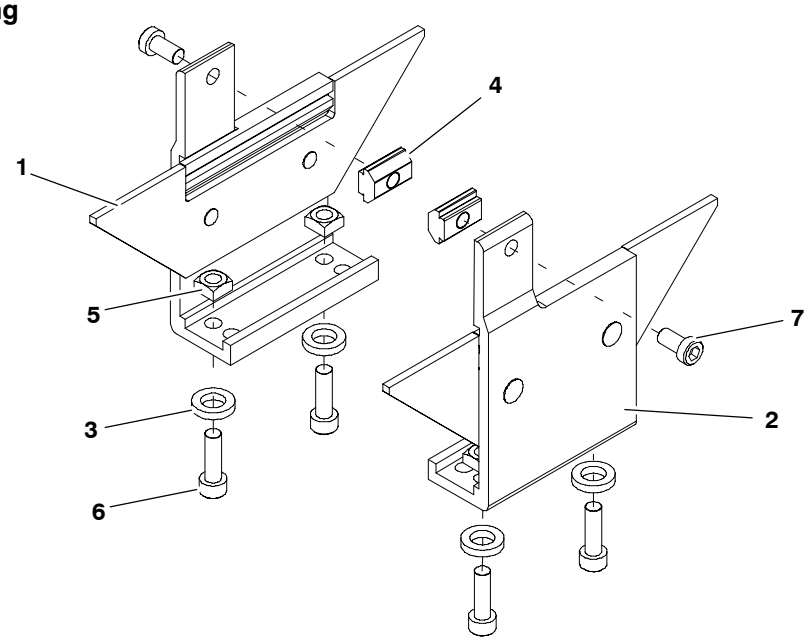

Item	Part Number	Description
1	240852	Cleated Stand Bracket Assembly LH 2' (610mm) Conveyor
2	240853	Cleated Stand Bracket Assembly RH 2' (610mm) Conveyor
3	605279P	Washer
4	639971M	Drop–In Tee Bar
5	807–920	Square Nut M6 5mm x 10mm
6	920620M	Socket Head Screw M6 x 20mm
7	920692M	Socket Head Screw M6 x 12mm

Connecting Assembly without Stand Mount

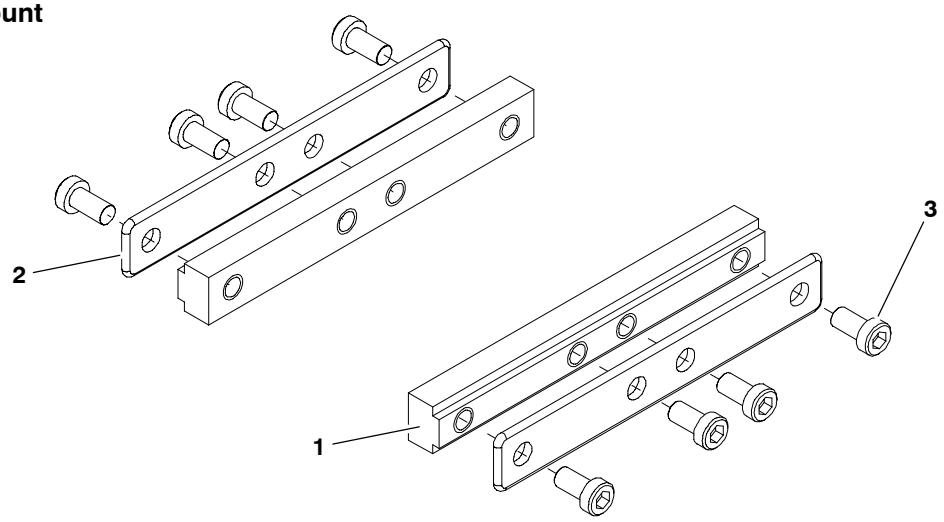

Item	Part Number	Description
1	240331	Frame Bar Connector
2	300153M	Intermediate Clamp Plate
3	920692M	Socket Head Screw M6 x 12mm

Flat Belt Connecting Assembly with Stand Mount

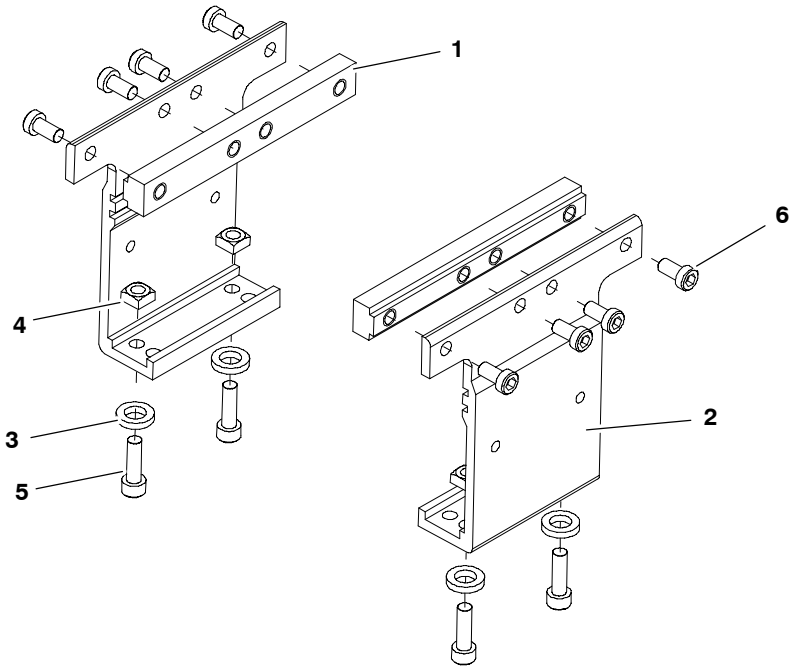

Item	Part Number	Description
1	240331	Frame Connector Bar
2	240837	Stand Mount Joint
3	605279P	Washer
4	807–920	Square Nut M6 5mm x 10mm
5	920620M	Socket Head Screw M6 x 20mm
6	920692M	Socket Head Screw M6 x 12mm

Cleated Belt Connecting Assembly with Stand Mount

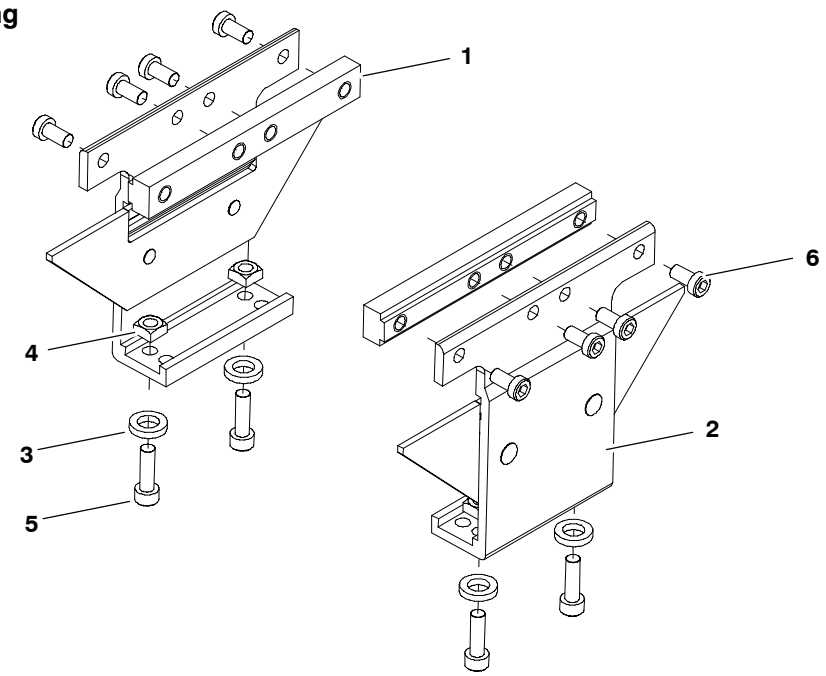

Item	Part Number	Description
1	240331	Frame Connector Bar
2	240846	Cleat Stand Bracket Assembly
3	605279P	Washer
4	807–920	Square Nut M6 5mm x 10mm
5	920620M	Socket Head Screw M6 x 20mm
6	920692M	Socket Head Screw M6 x 12mm

2” (51mm) to 6” (152mm) Flat Belt Return Roller

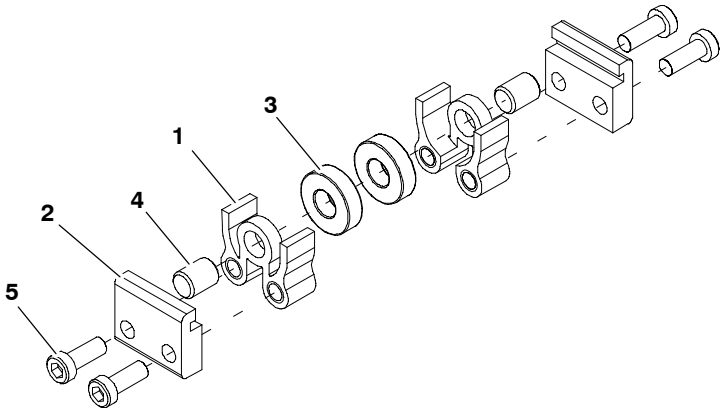

Item	Part Number	Description
1	240825	Short Return Roller Guard
2	240827	Return Roller Clip
3	802–123	Bearing
4	913–100	Dowel Pin
5	920693M	Socket Head Screw M6 x 16mm

8” (203mm) to 24” (610mm)
Flat Belt Return Roller

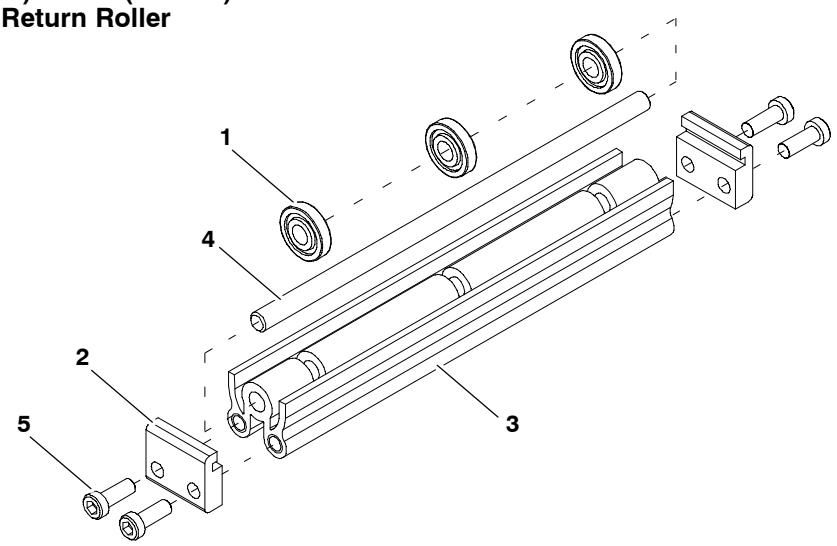

Item	Part Number	Description
1	240826	Return Roller
2	240827	Return Roller Clip
3	240908	Return Roller Guard 8” (203mm)
	240910	Return Roller Guard 10” (254mm)
	240912	Return Roller Guard 12” (305mm)
	240918	Return Roller Guard 18” (457mm)
	240921	Return Roller Guard 18” (533mm)
	240924	Return Roller Guard 24” (610mm)

4	241008	Return Roller Rod 8” (203mm)
	241010	Return Roller Rod 10” (254mm)
	241012	Return Roller Rod 12” (305mm)
	241018	Return Roller Rod 18” (457mm)
	241021	Return Roller Rod 21” (533mm)
	241024	Return Roller Rod 24” (610mm)
5	920693M	Socket Head Screw M6 x 16mm

Cleated Belt Return Roller

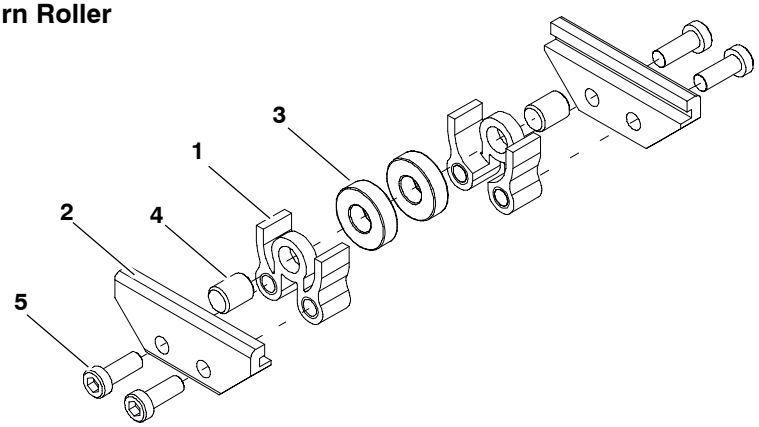

Item	Part Number	Description
1	240825	Short Return Roller Guard
2	240828	Cleated Return Roller Clip

3	802–123	Bearing
4	913–100	Dowel Pin
5	920693M	Socket Head Screw M6 x 16mm

Conveyor Belt Part Number Configuration

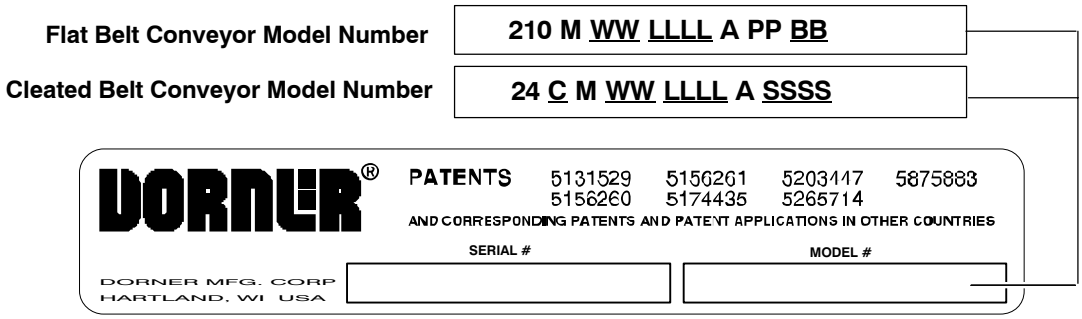

Figure 54

Flat Belt Part Number Configuration

Refer to Dorner patent plate (Figure 54). From the model number, determine conveyor width ("WW"), length ("LLLL") and belt type ("BB"). Use data to configure belt part number as indicated below. *Add "V" for V-guided belts.

22 - WW LLLL / BB V *

22- ____ (Fill In) _____ / ____ V *

Cleated Belt Part Number Configuration

Refer to Dorner patent plate (Figure 54). From the model number, determine conveyor width ("WW"), length ("LLLL"), cleat type ("C") and cleat spacing ("SSSS"). Use data to configure belt part number as indicated below. *Add "V" for V-guided belts.

22 - WW LLLL C SSSS V *

22-____ _____ (Fill In) __ _____ V *

Notes

Return Policy

No returns will be accepted without prior written factory authorization. When calling for authorization, please have the following information ready for the Dorner Factory representative or your local distributor:

1. Name and address of customer.
2. Item(s) being returned.
3. Reason for return.
4. Customer's original order number used when ordering the item(s).
5. Dorner or distributor invoice number.

A representative will discuss action to be taken on the Returned items and provide a Returned Goods Authorization Number to reference.

There will be a 15% restocking charge on all new items returned for credit where Dorner was not at fault. These will not be accepted after 60 days from original invoice date. The restocking charge covers inspection, cleaning, disassembly, and reissuing to inventory.

If a replacement is needed prior to evaluation of returned item, a purchase order must be issued. Credit (if any) is issued only after return and evaluation is complete.

Dorner has representatives throughout the world. Feel free to contact Dorner for the name of your local representative. Our technical sales and service staff will gladly help with your questions on Dorner products.

For a copy of Dorner's Limited Warranty, contact factory, distributor, service center or visit our website at www.dorner.com.

For replacement parts, contact an authorized Dorner Service Center or the factory.

DORNER®

Dorner Mfg. Corp. reserves the right to change or discontinue products without notice. All products and services are covered in accordance with our standard warranty. All rights reserved. ©Dorner Mfg. Corp. 2000

DORNER MFG. CORP.
975 Cottonwood Drive, PO Box 20
Hartland, WI 53029-0020 USA
USA
TEL 1-800-397-8664 (USA)
FAX 1-800-369-2440 (USA)
Internet: www.dorner.com

Outside the USA:
TEL 1-262-367-7600
FAX 1-262-367-5827