Installation, Maintenance & Parts Manual

2200 Series Center Drive Conveyors

Table of Contents

Warnings – General Safety 2
Introduction 2
Product Description 3
Specifications 3
Installation 4
Required Tools 4
Recommended Installation Sequence 5
Conveyors Up to 3658 mm 5
Conveyors Longer Than 3658 mm 5
Mounting Brackets 6
Return Rollers 7
Preventive Maintenance & Adjustment 8
Required Tools 8
Standard Tools 8
Special Tools 8
Checklist 8
Lubrication 8
Conveyor Pulley Bearings 8
Drive Module Idler Pulley Bearings 8
Drive Module Drive Pulley Bearings 8
Return Rollers 8
Maintaining Conveyor Belt 8
Troubleshooting 8
Cleaning 8
Conveyor Belt Replacement 9
Conveyor Belt Replacement Sequence 9
Belt Removal for Conveyor Without Stands or Gearmotor Mounting Package 9
Belt Removal for Conveyor With Stands and Gearmotor Mounting Package 9
Gearmotor Mounting Package Removal 11
Drive Module Removal 12
Belt Removal from Drive Module 12
Conveyor Belt Installation 13
Conveyor Tension End Adjustment 14
Conveyor Belt Tensioning 15
Conveyor Belt Tracking 16
Pulley Removal 16
Conveyor End Pulley Removal 16
Drive Module Drive Pulley Removal 17
Drive Module Idler Pulley Removal 17
Conveyor Pulley Bearing Removal and Replacement . . . 18
Removal 18
Replacement 18
Conveyor Pulley Installation 19
Drive Module Drive Pulley 19
Drive Module Idler Pulley 19
Nose Bar Bearing Replacement 19
Service Parts 20
51mm Wide Conveyor 20
76mm to 152mm Wide Conveyor 22
203mm to 605mm Wide Conveyor 24
457mm to 610mm Wide Conveyor 27
Center Drive Module 30
Nosebar End Assembly 32
–04 76mm Aluminum Side 33
–05 38mm Aluminum Side 35
–07 Low to Side Wiper 37
–09 Low to High Side 39
–10 13mm Extruded Plastic 41
–13 Adjustable Guiding 43
Flared Side Guiding 44
Flat Belt Mounting Brackets 45
Flat Belt Mounting Brackets for 610mm Conveyors 45
Connecting Assembly without Stand Mount 46
Flat Belt Connecting Assembly with Stand Mount 46
51mm to 152mm Flat Belt Return Roller 47
51mm to 152mm Flat Belt Return Roller 47
Conveyor Belt Part Number Configuration 48
Return Policy 50

Warnings – General Safety

WARNING

The safety alert symbol, black triangle with white exclamation, is used to alert you to potential personal injury hazards.

DANGER

Climbing, sitting, walking or riding on conveyor will cause severe injury.

KEEP OFF CONVEYORS.

DANGER

DO NOT OPERATE CONVEYORS IN AN EXPLOSIVE ENVIRONMENT.

WARNING

Exposed moving parts can cause severe injury.

LOCK OUT POWER before removing guards or performing maintenance.

WARNING

Gearmotors may be HOT.

DO NOT TOUCH Gearmotors.

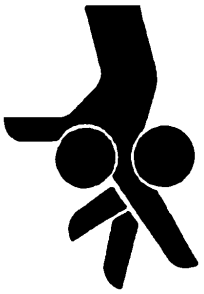

WARNING

Dorner cannot control the physical installation and application of conveyors. Taking protective measures is the responsibility of the user.

When conveyors are used in conjunction with other equipment or as part of a multiple conveyor system, CHECK FOR POTENTIAL PINCH POINTS and other mechanical hazards before system start-up.

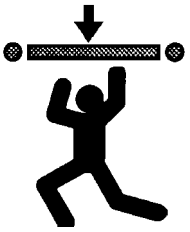

WARNING

Loosening stand height or angle adjustment screws may cause conveyor sections to drop down, causing severe injury.

SUPPORT CONVEYOR SECTIONS PRIOR TO LOOSENING STAND HEIGHT OR ANGLE ADJUSTMENT SCREWS.

Introduction

IMPORTANT: Some illustrations may show guards removed. Do NOT operate equipment without guards.

Upon receipt of shipment:

- Compare shipment with packing slip. Contact factory regarding discrepancies.
- Inspect packages for shipping damage. Contact carrier regarding damage.
- Accessories may be shipped loose. See accessory instructions for installation.

Dorner's Limited Warranty applies.

Dorner has convenient, pre–configured kits of Key Service Parts for all conveyor products. These time saving kits are easy to order, designed for fast installation, and guarantee you will have what you need when you need it. Key Parts and Kits are marked in the Service Parts section of this manual with the Performance Parts Kits logo .

Dorner 2200 series conveyors are covered by Patent Numbers 5,174,435, 6,298,981, 6,422,382 and corresponding patents and patent applications in other countries.

Dorner reserves the right to make changes at any time without notice or obligation.

Product Description

Refer to Figure 1 for typical conveyor components.

Typical Components	
A	Conveyor
B	Drive Module
C	Guiding & Accessories
D	Gearmotor Mounting Package
E	Gearmotor
F	Mounting Brackets
G	Support Stand
H	Variable Speed Controller
I	Fixed End
J	Tension End

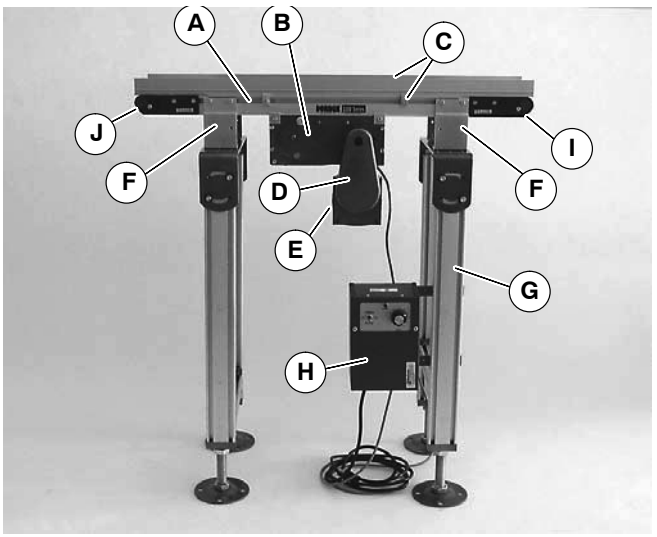

Figure 1

Specifications

Models:

2200 Series Center Drive Conveyor

2 1 5 M WW LLLL A PP BB

- **BB** — **Belt Type***
- **PP** — **Conveyor Profile***
- **A** — **Mount Position (A or D)***
- **LLLL** — **Conveyor Length Reference**
- **WW** — **Conveyor Width Reference**
- **M** — **Documentation Language: M=English**
- **1** — **Tail Type***

*** See Ordering and Specifications Catalog for details.**

Conveyor Supports:

Maximum Distances:

K = 457 mm

L = 1829 mm**

**** For conveyors longer than 3962 mm, install support at joint.**

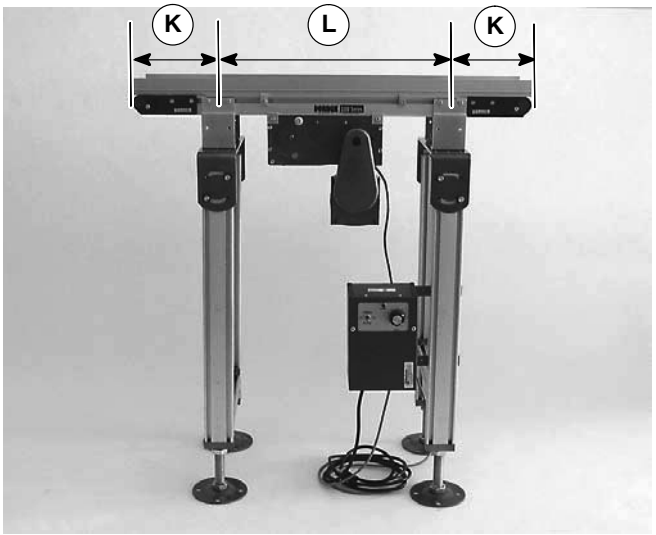

Figure 2

Specifications

Specifications:

Conveyor Width Reference (WW)	02	03	04	05	06	08	10	12	18	21	24
Conveyor Belt Width	44 mm	70 mm	95 mm	127 mm	152 mm	203 mm	254 mm	305 mm	457 mm	533 mm	610 mm
Maximum Conveyor Load* (See NOTE Below)	18 kg	23 kg	27 kg	34 kg	41 kg	47 kg	54 kg	54 kg	54 kg	54 kg	54 kg
Conveyor Start-up Torque*	1.0 Nm	1.1 Nm	1.2 Nm	1.4 Nm	1.7 Nm	2.3 Nm	2.6 Nm	3.4 Nm	3.4 Nm	4.0 Nm	4.0 Nm
Belt Travel	107 mm per revolution of pulley										
Maximum Belt Speed*	72 meters/minute										
Belt Take-up	25 mm of stroke = 51 mm of belt take-up										

Conveyor Length Reference (LL)	02	03	04	05	06	07	08	09	10	11	12	13	24	14	15	16	17	18	19	20	21	22	23	24
Conveyor Length	610 mm	914 mm	1219 mm	1524 mm	1829 mm	2134 mm	2438 mm	2743 mm	3048 mm	3353 mm	3658 mm	3962 mm	7315 mm	4267 mm	4572 mm	4877 mm	5182 mm	5486 mm	5791 mm	6096 mm	6401 mm	6706 mm	7010 mm	7315 mm

NOTE: Maximum conveyor loads based on:

- **Non-accumulating product**
- **Product moving towards gearmotor**
- **Conveyor being mounted horizontal**

*** See Ordering and Specifications Catalog for details.**

Installation

NOTE: Conveyor MUST be mounted straight, flat and level within confines of conveyor. Use a level (M of Figure 3) for setup.

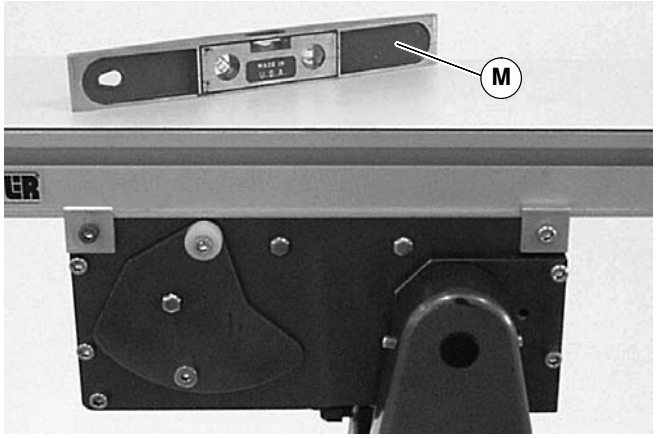

Figure 3

Installation Component List

O Conveyor frame [(two sections – for 3658mm and longer conveyors]
P Conveyor brackets (4x)
Q Return rollers (for longer conveyors)

Required Tools

- Hex key wrenches:
  4 mm, 5 mm
- Level
- Torque wrench

Recommended Installation Sequence

- Install stands (see accessory instructions)
- Assemble conveyor (if required)
- Attach mounting brackets to conveyor
- Attach conveyor to stands
- Install return rollers on conveyor (optional)
- Mount gearmotor mounting package (see accessory instructions)
- Attach guides/accessories (see "Service Parts" section, pages 33 to 39)

Conveyors Up to 3658 mm

No assembly is required. Install mounting brackets and return rollers. Refer to "Mounting Brackets", page 6 and "Return Rollers", page 7.

Conveyors Longer Than 3658 mm

1. Locate conveyor sections (O Figure 4)

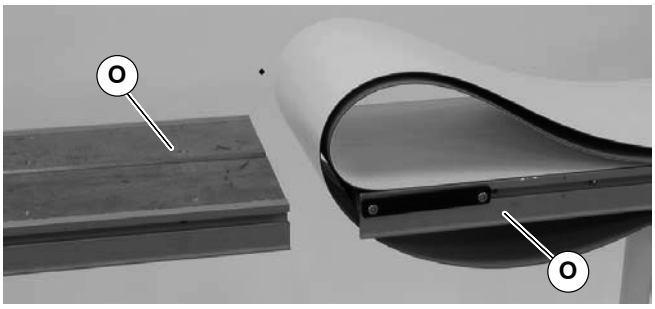

Figure 4

2. On tension end of the conveyor, identified with a label (R of Figure 5), push in head plate assembly (S): On both sides of conveyor, loosen and move cam tracking assemblies (T) (if equipped) away from head plates, then loosen fastening screws (U) and push head plate assembly inward.

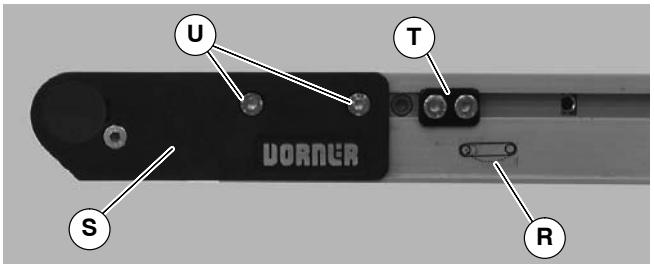

Figure 5

3. Roll out conveyor belt and place conveyor frame sections (O of Figure 6) into belt loop.

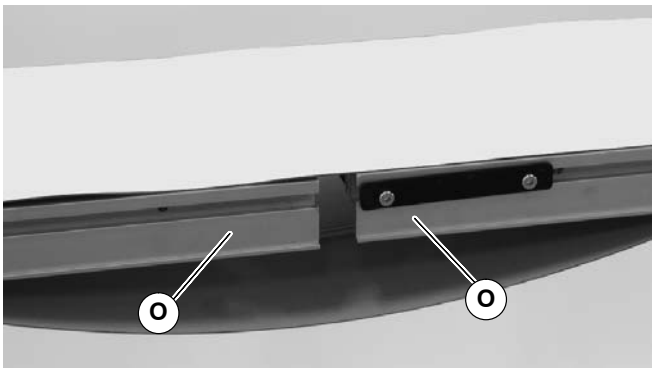

Figure 6

4. Join conveyor sections and install connector brackets (V of Figure 7) or connector/mount brackets (VA) and screws (W) on both sides as indicated. Tighten screws to 7 Nm.

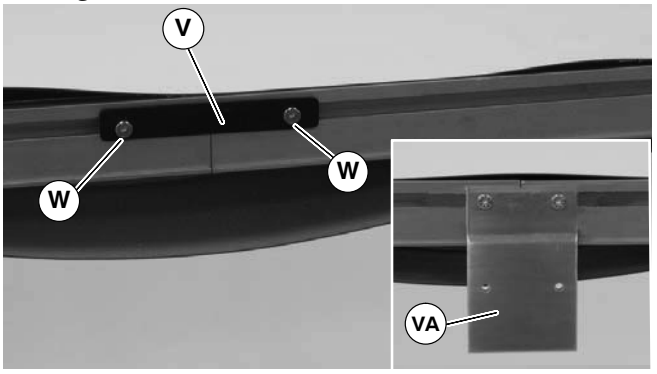

Figure 7

5. With a 5 mm hex-key wrench, rotate pinion gear (X of Figure 8) to tension the conveyor belt. Tighten fastening screws (U) on both sides of conveyor to (7 Nm. For proper tensioning, refer to "Conveyor Tension End Adjustment", page 14.

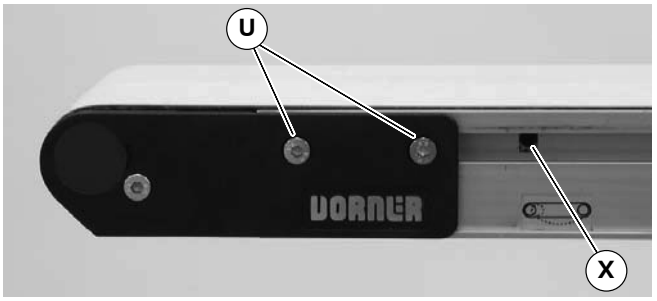

Figure 8

6. Install mounting brackets and return rollers. Refer to "Mounting Brackets", page 6 and "Return Rollers", page 7.
7. If equipped with cam tracking assemblies (T of Figure 5), adjust belt tracking. Refer to "Conveyor Belt Tracking", page 16.

Mounting Brackets

1. Locate brackets. Exploded views shown in Figures 9.

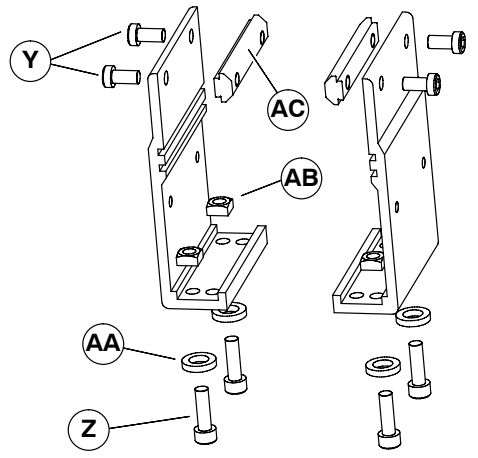

Mounting Brackets for Flat Belt Conveyor

Figure 9

2. Remove screws (Y & Z of Figures 9), washers (AA), nuts (AB) and T-bars (AC) from brackets.

3. Insert T-bars (AC of Figures 9) into conveyor side slots (AD of Figure 10). Fasten brackets (P of Figure 10) to conveyor with mounting screws (Y).

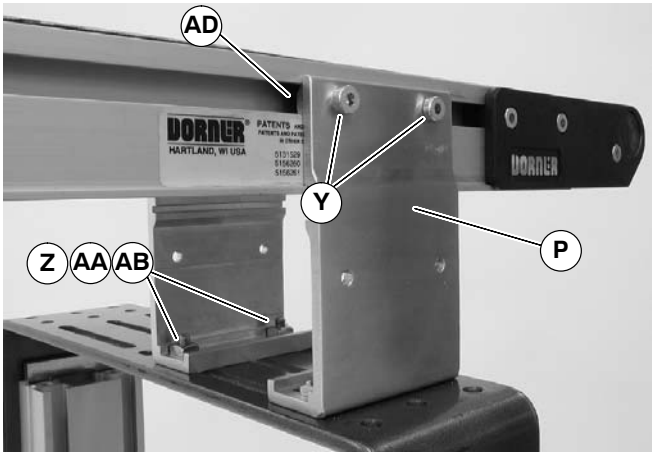

Figure 10

4. Fasten brackets to support stand with mounting screws (Z of Figure 10), washers (AA) and nuts (AB).

5. Tighten screws (Y & Z of Figure 10) to 7 Nm.

Return Rollers

51–152 mm Wide Flat Belt Conveyors

1. Locate return rollers. Exploded views shown in Figures 11.

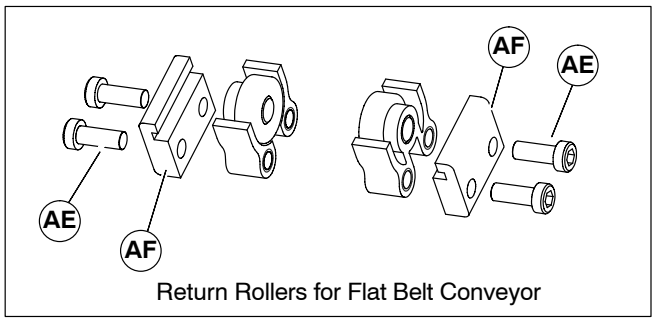

Figure 11

2. Remove screws (AE of Figures 11) and clips (AF) from roller assembly.
3. Install roller assemblies (Q of Figure 12) as shown. Tighten screws (AE) to 7 Nm.

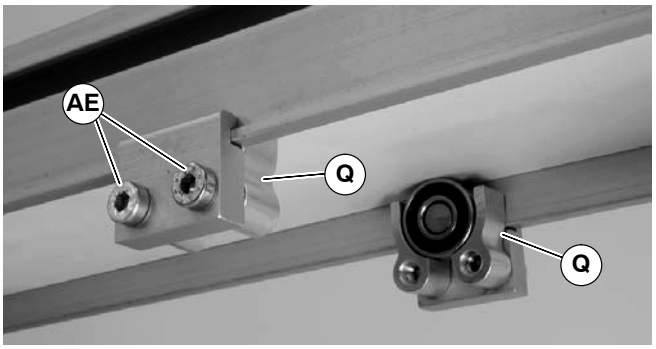

Figure 12

203–610 mm Wide Flat Belt Conveyors

1. Locate return rollers. Exploded view shown in Figure 13.

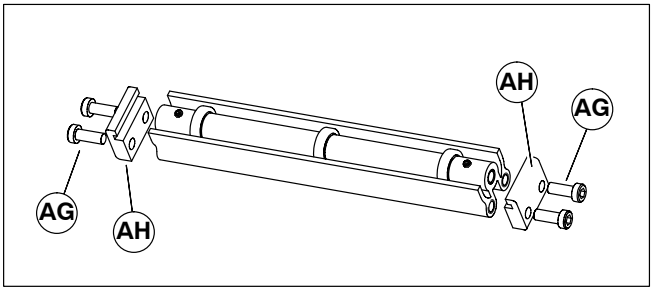

Figure 13

2. Remove screws (AG of Figure 13) and clips (AH) from roller assembly.
3. Install roller assembly as shown (Q of Figure 14). Tighten screws (AG) to 7 Nm.

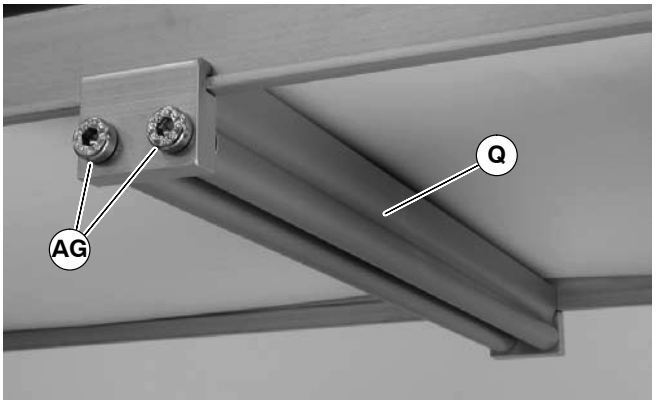

Figure 14

Preventive Maintenance and Adjustment

Required Tools

Standard Tools

- Hex key wrenches:
  - 2 mm – 2.5 mm – 3 mm
  - 4 mm – 5 mm – 6 mm
- Small flat blade screwdriver
- Adjustable wrench
- Arbor press

Special Tools

- 450282, Sealed Bearing Installation Tool

Checklist

- Keep service parts on hand. See “Service Parts” for recommendations.
- Keep supply of belt cleaner (part number 625619).
- Clean entire conveyor and knurled pulley while disassembled.
- Replace worn or damaged parts.

Lubrication

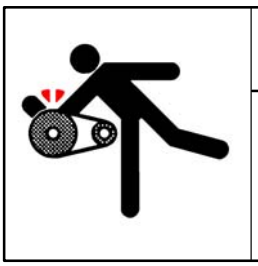

WARNING

Exposed moving parts can cause severe injury.

LOCK OUT POWER before removing guards or performing maintenance.

Conveyor Pulley Bearings

No lubrication is required. Replace pulley if worn.

Drive Module Idler Pulley Bearings

No lubrication is required. Replace pulley if worn.

Drive Module Drive Pulley Bearings

No lubrication is required. Replace bearings if worn.

Return Rollers

No lubrication is required. Replace bearings if worn.

Maintaining Conveyor Belt

Troubleshooting

Inspect conveyor belt for:

- Surface cuts or wear
- Stalling or slipping

Surface cuts and wear indicate:

- Sharp or heavy parts impacting belt
- Jammed parts
- Improperly installed bottom wiper
- Accumulated dirt in wiper
- Foreign material inside the conveyor
- Improperly positioned accessories
- Bolt-on guiding is pinching belt

Stalling or slipping indicates:

- Excessive load on belt
- Conveyor belt or drive timing belt are not properly tensioned
- Worn knurl or impacted dirt on drive pulley
- Intermittent jamming or drive train problems

NOTE: Visit www.dorner.com for complete list of troubleshooting solutions.

Cleaning

IMPORTANT: Do not use belt cleaners that contain alcohol, acetone, Methyl Ethyl Ketone (MEK) or other harsh chemicals.

Use Dorner Belt Cleaner (part number 625619). Mild soap and water may also be used. Do not soak the belt.

For /05 woven polyester and /06 black anti-static belts, use a bristled brush to improve cleaning.

Conveyor Belt Replacement

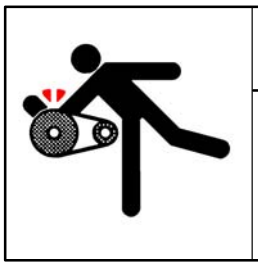

WARNING

Exposed moving parts can cause severe injury.

LOCK OUT POWER before removing guards or performing maintenance.

Conveyor Belt Replacement Sequence

NOTE: See Table of Contents for beginning page numbers of following procedures.

- Remove old conveyor belt:
  Conveyor without Stands or Gearmotor Mounting Package

  Conveyor with Stands and Gearmotor Mounting Package
- Drive Module Removal
- Conveyor Belt Removal from Drive Module
- Install New Conveyor Belt
- Tension Conveyor Belt

Belt Removal for Conveyor Without Stands or Gearmotor Mounting Package

1. If equipped, remove bottom wipers (AI of Figure 15): Remove fastening screws (AJ) then remove wiper (AI).

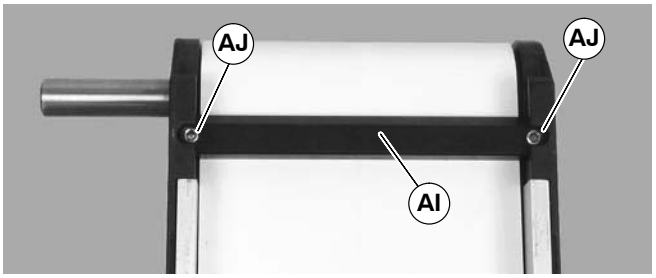

Figure 15

2. If equipped, remove return rollers and guiding and accessories from one side of conveyor.
3. Loosen corner screws (AK of Figure 16), on each side of the drive module (AL).

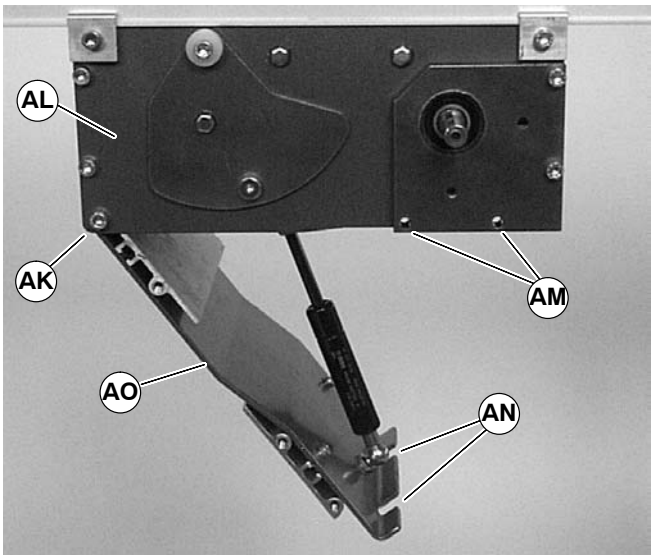

Figure 16

4. Remove tension door screws (AM) on each side of the drive module.
5. Using finger grip holes (AN), open the tension door (AO) to release conveyor belt tension.
6. On tension end of the conveyor, identified with a label (R of Figure 17), push in head plate assembly (S): On both sides of conveyor, loosen and move cam tracking assemblies (T) (if equipped) away from head plates, then loosen fastening screws (U) and push head plate assembly inward.

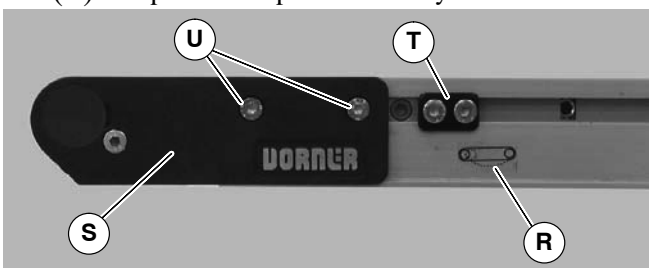

Figure 17

7. Remove conveyor belt from conveyor ends. See **NOTE**.

NOTE: On conveyors 1219 mm and shorter by 203 mm and wider, it is be necessary to remove the drive module at the same time the conveyor belt is removed. See "Drive Module Removal", page 12.

8. Proceed to "Drive Module Removal", page 12 and "Belt Removal from Drive Module", page 12.

Belt Removal for Conveyor With Stands and Gearmotor Mounting Package

1. If equipped, remove bottom wipers (AI of Figure 18): Remove fastening screws (AJ) then remove wiper (AI).

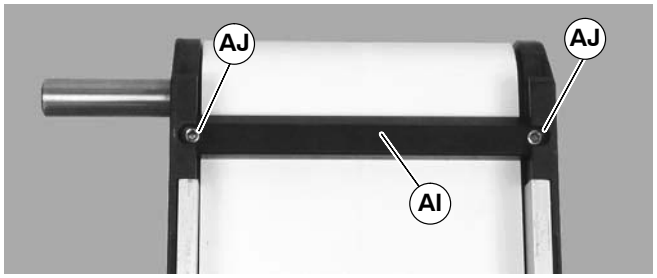

Figure 18

2. If equipped, remove return rollers and guiding and accessories from one side of conveyor.
3. Remove Gearmotor Mounting Package. See "Gearmotor Mounting Package Removal", page 11.
4. Loosen corner screws (AK of Figure 19), on each side of the drive module (AL).

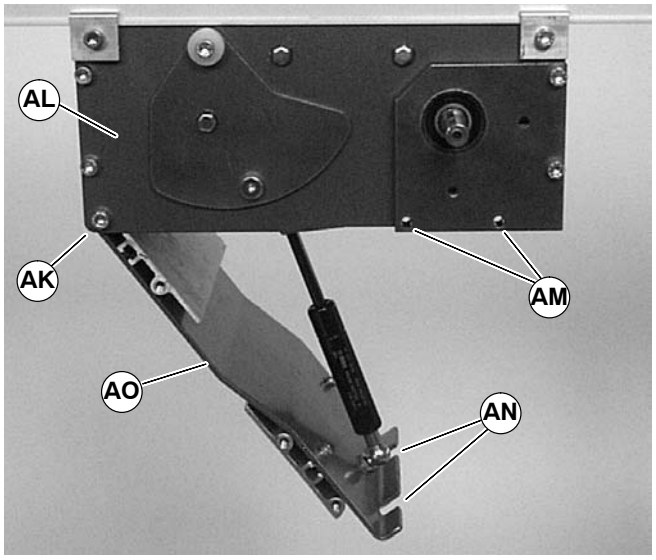

Figure 19

5. Remove tension door screws (AM) on each side of the drive module.

NOTE: With vertically mounted gearmotors, tension door screws (AM) are removed from one side when the gearmotor mounting package is removed.

6. Using finger grip holes (AN), open the tension door (AO) to release conveyor belt tension.
7. On tension end of the conveyor, identified with a 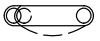 label (R of Figure 20), push in head plate assembly (S): On both sides of conveyor, loosen and move cam tracking assemblies (T) (if equipped) away from head plates, then loosen fastening screws (U) and push head plate assembly inward.

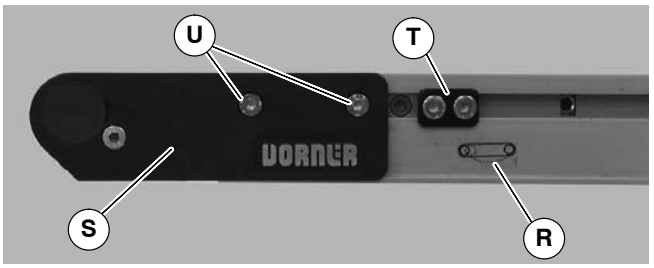

Figure 20

8. Place temporary support stands (AP of Figure 21) at both ends of the conveyor.

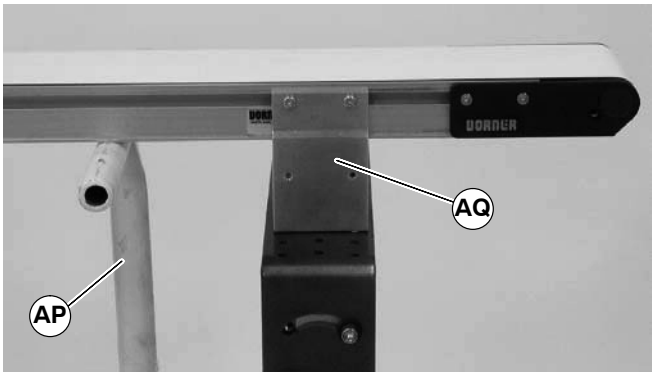

Figure 21

9. Remove mounting brackets (AQ of Figure 21) from one side of conveyor. (Reverse steps 3 & 4 of "Mounting Brackets" section, page 6.)
10. Remove conveyor belt from conveyor ends. See **NOTE**.

NOTE: On conveyors 1219 mm and shorter by 203 mm and wider, it is be necessary to remove the drive module at the same time the conveyor belt is removed. See "Drive Module Removal", page 12.

11. Proceed to "Drive Module Removal", page 12 and "Belt Removal from Drive Module", page 12.

Gearmotor Mounting Package Removal

1. Remove cover screws (AR of Figure 22) and remove cover (AS).

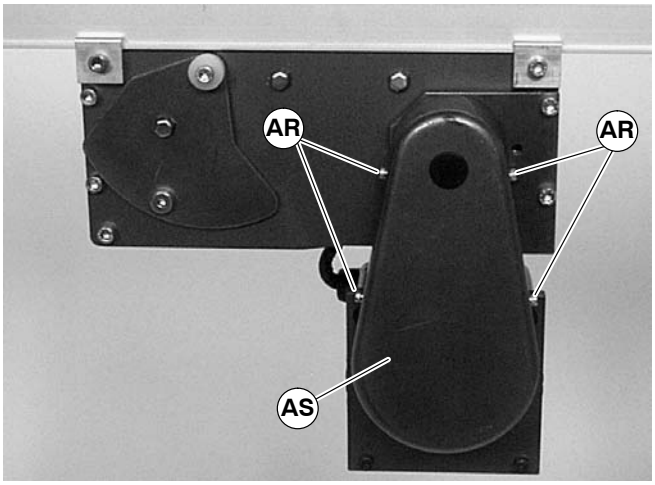

Figure 22

NOTE: Figures 22 & 23 show vertically mounted gearmotor. Horizontally mounted gearmotor is similar.

2. Loosen belt tensioner (AT of Figure 23) then remove timing belt (AU).

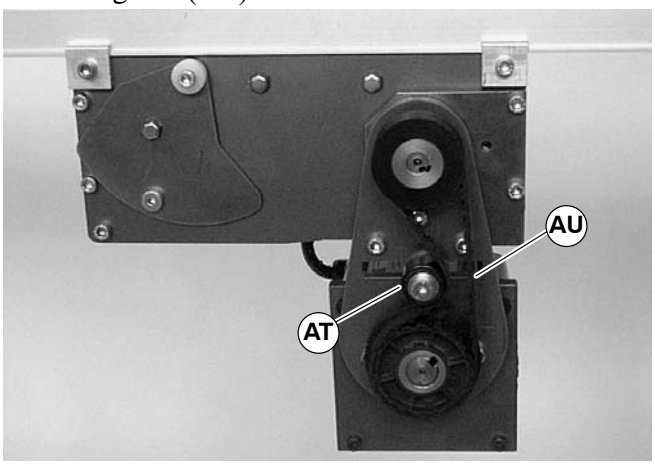

Figure 23

NOTE: If the timing belt does not slide over the pulley flange, loosen the driven pulley set screws (AV of Figure 24) and remove the pulley (AW) with the belt (AY).

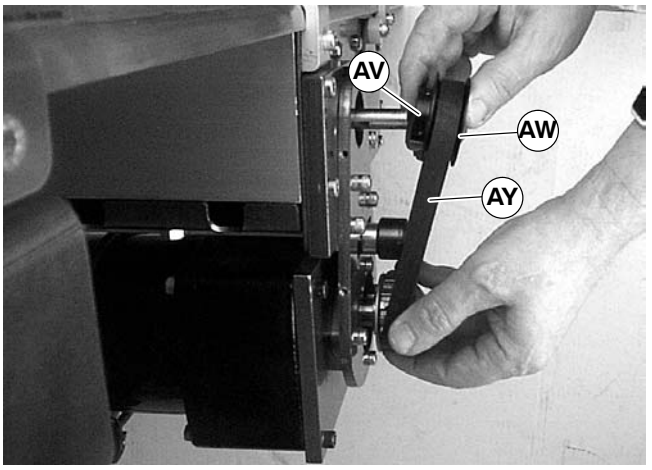

Figure 24

3. Remove three mounting screws (AZ of Figure 25) and remove gearmotor.

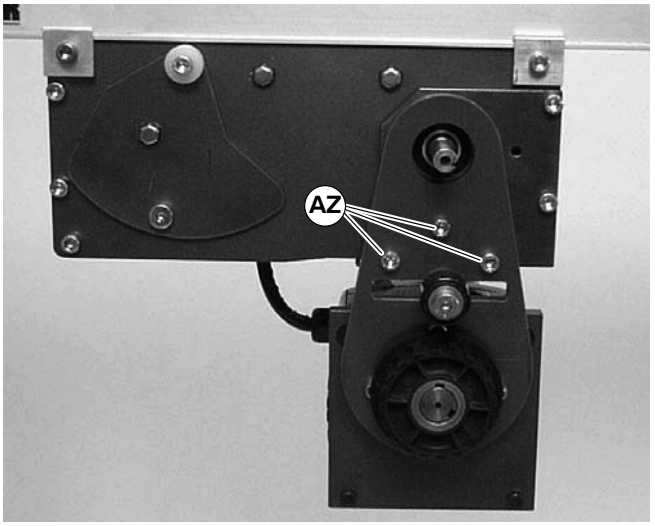

Figure 25

Drive Module Removal

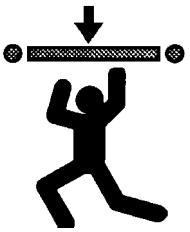

WARNING

Removing drive module without support under the module may lead to personel injury.

PROVIDE SUPPORT UNDERNEATH THE DRIVE MODULE BEFORE REMOVING THE MODULE.

NOTE: If desired, mark position of drive module on conveyor before removal.

1. Place temporary support (BA of Figure 26) underneath the drive module.

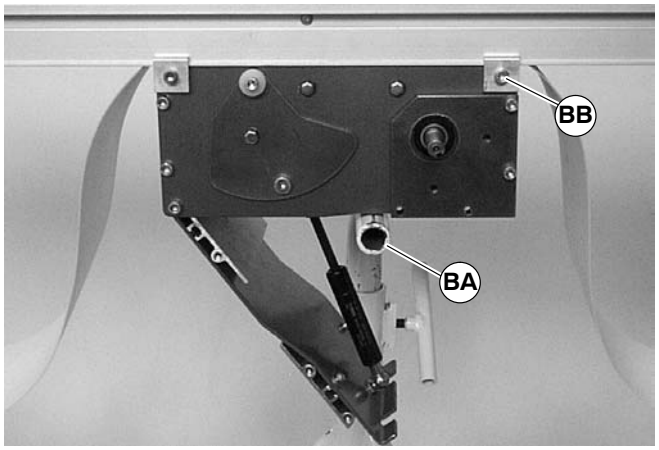

Figure 26

2. Loosen clamp screws (BB) on each corner of the module. Remove the module.

Belt Removal from Drive Module

1. Remove drive plate screws (BC of Figure 27). Remove the tension drive plate (BD).

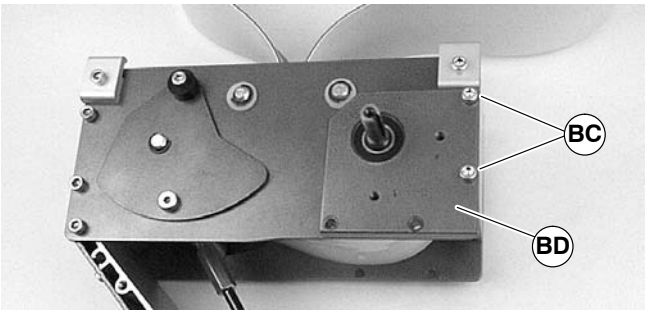

Figure 27

2. Remove drive pulley (BE of Figure 28).

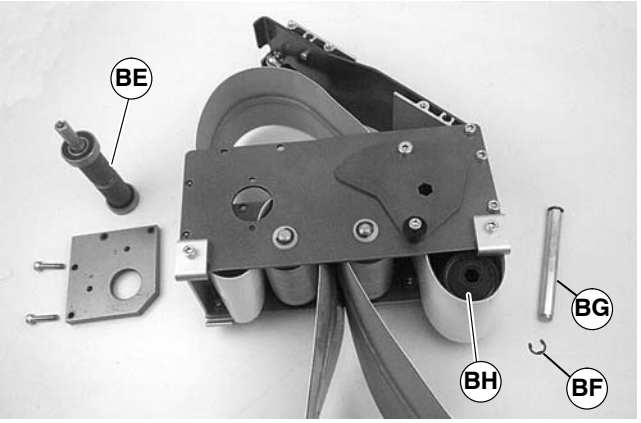

Figure 28

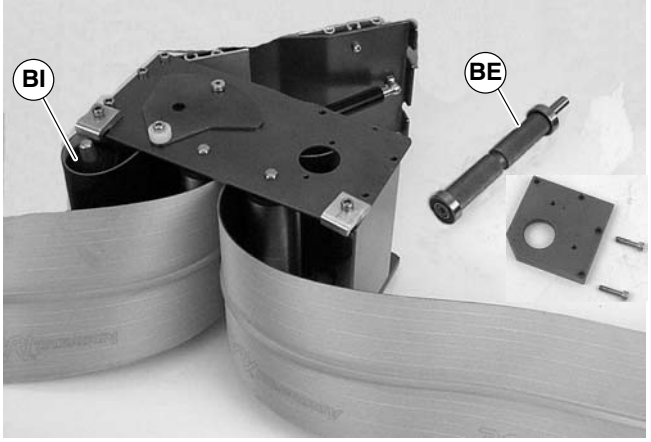

Figure 29

3. Remove grooved idler pulley:
   - For 44 mm, 70 mm or 95 mm wide conveyor, detach E-ring clip (BF of Figure 28). Remove pulley shaft (BG) and remove pulley (BH).
   - For 127 mm or wider conveyor, depress both sides of spring-loaded shaft and remove pulley (BI of Figure 29).
4. Remove the conveyor belt.

Conveyor Belt Installation

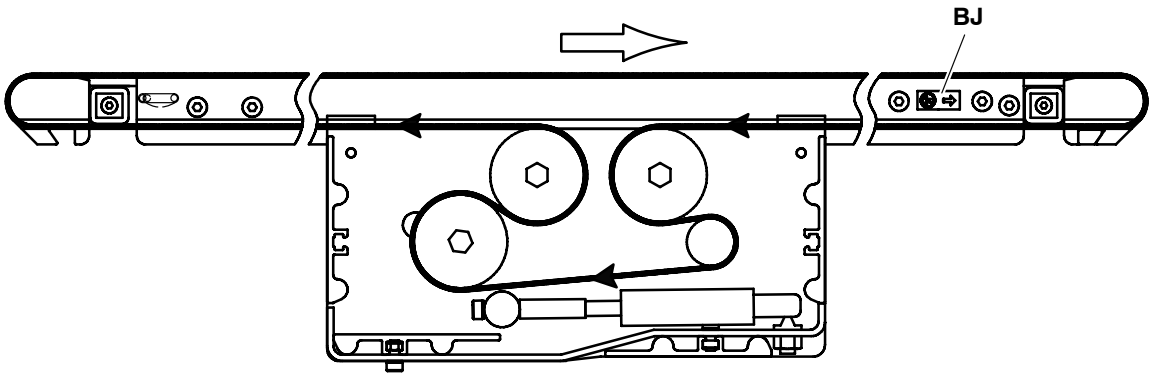

Conveyor Belt Routing

Figure 30

IMPORTANT: On a center drive conveyors, belt travel direction is identified by an arrow decal on the side of the conveyor (BJ of Figures 31 & 30).

Figure 31

NOTE: It is necessary to replace the drive module at the same time the conveyor belt is replaced on conveyors 1219 mm and shorter by 203 mm and wider.

1. Orient the conveyor belt so that the splice leading fingers (BK of Figure 32) point in the direction of belt travel, indicated by the label (BJ of Figure 31).

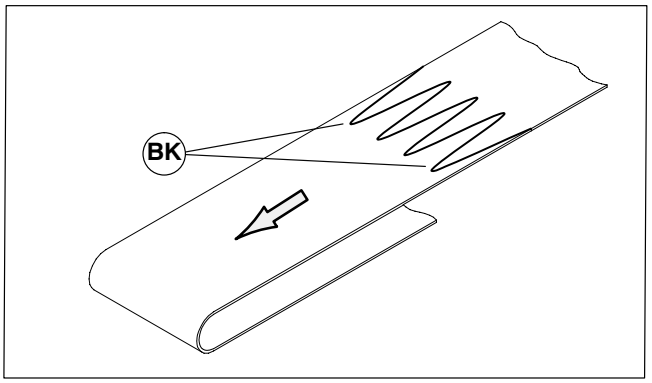

Figure 32

2. Place loop of belt (BL of Figure 33) into the drive module between top idler pulleys (BM).

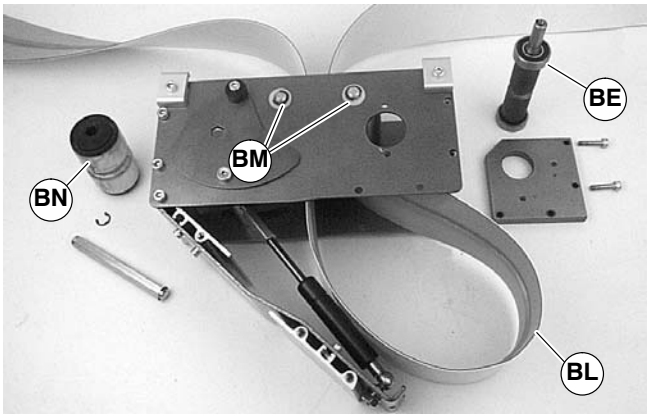

Figure 33

3. Place grooved idler pulley (BN of Figure 33) into the belt loop and install it in the drive module. Refer to "Belt Removal from Drive Module" on page 12 and reverse step 3.
4. Place drive pulley (BE of Figure 33) into the belt loop and install it in the drive module. Refer to "Belt Removal from Drive Module" on page 12 and reverse steps 1 and 2. Tighten screws (BC of Figure 27) to 9 Nm.
5. Install the drive module onto the conveyor and attach clamps (BB of Figure 26) in each corner. Tighten screws to 9 Nm.
6. Route and install the belt over both ends of the conveyor.
7. On conveyors with stands, re-install conveyor mounting brackets. Refer to "Mounting Brackets", page 6, steps 3 through 5.
8. Adjust the conveyor tensioning end. See "Conveyor Tensioning End Adjustment", page 14.

WARNING

Tension door closes quickly, may cause injury.

KEEP FINGERS CLEAR OF TENSION DOOR.

9. Carefully close the drive module tension door (BO of Figure 34). See **WARNING**.

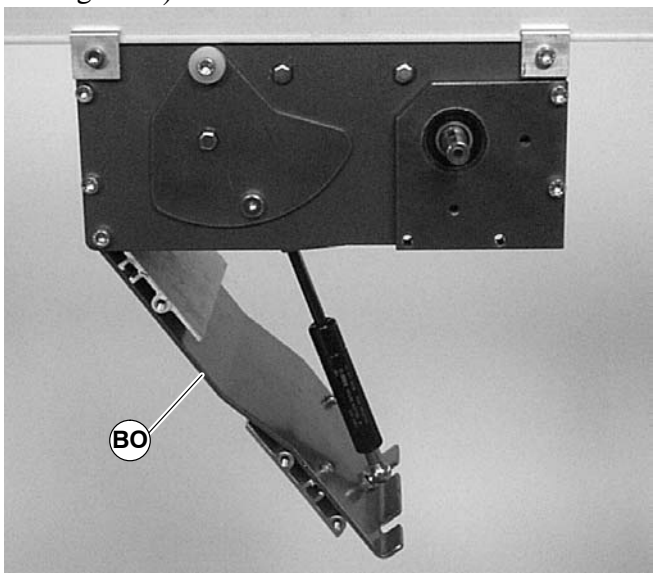

Figure 34

10. Tighten corner screws (BO of Figure 35) on each side of the drive module to 9 Nm.

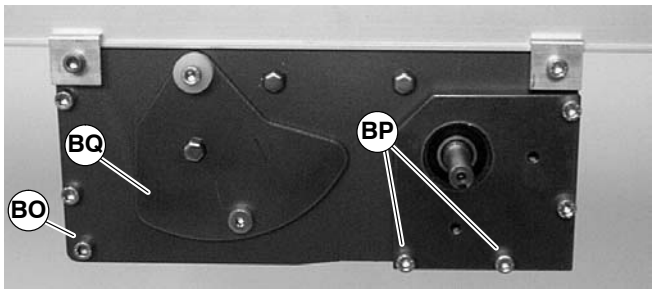

Figure 35

11. If equipped, re-install the gearmotor mounting package. Reverse steps of "Gearmotor Mounting Package Removal" procedure on page 11.

12. Re-install tension door screws (BP of Figure 35) on each side of the module. Tighten screws to 9 Nm.

NOTE: With vertically mounted gearmotors, tension door screws (BP) are installed on one side when the gearmotor mounting package is installed.

13. If equipped, re-install bottom wipers (AI of Figure 36): Install wiper (AI) then install screws (AJ).

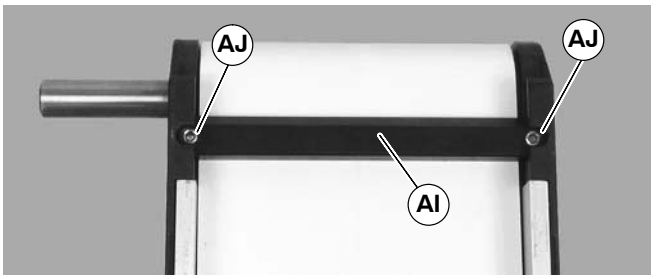

Figure 36

14. If equipped, replace guiding.

Conveyor Tension End Adjustment

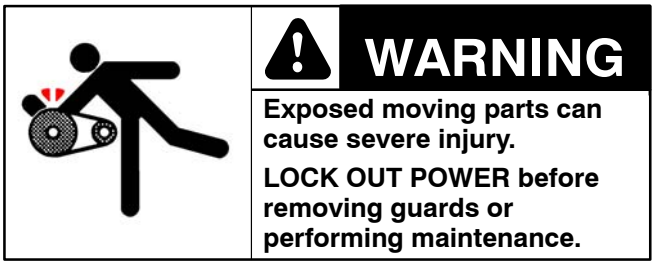

WARNING

Exposed moving parts can cause severe injury.

LOCK OUT POWER before removing guards or performing maintenance.

Conveyors with 32 mm Diameter Pulleys

1. On tension end of the conveyor, identified with a label (R of Figure 37), adjust head plate assembly (S): On both sides of conveyor, loosen fastening screws (U) and rotate pinion gear (X) to adjust head plate assembly.

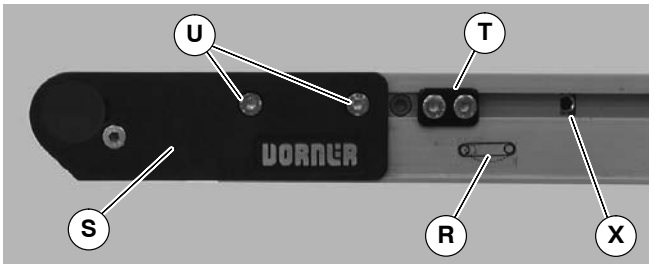

Figure 37

2. Adjust head plate assembly so end of conveyor frame aligns with first tensioning mark (BR of Figure 38). Tighten fastening screws (U of Figure 37) on both sides of conveyor to 7 Nm.

Figure 38

3. If equipped with cam tracking assemblies (T of Figure 37), reposition against head plates and adjust belt tracking. Refer to “Conveyor Belt Tracking”, page 16.

Conveyors with Nose Bar Idlers

1. On tension end of the conveyor, identified with a label (R of Figure 39), adjust head plate assembly (S): On both sides of conveyor, loosen fastening screws (U) and rotate pinion gear (X) to adjust head plate assembly.

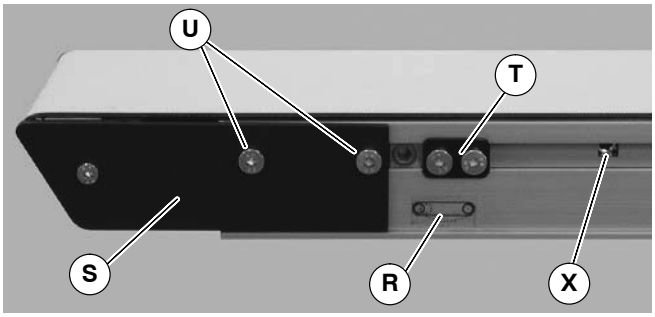

Figure 39

2. Adjust head plate assembly so the edge of the axle support plate (BS of Figure 40) is separated from the end of the conveyor (BT) by 29 mm. Tighten fastening screws (U of Figure 39) on both sides of conveyor to 7 Nm.

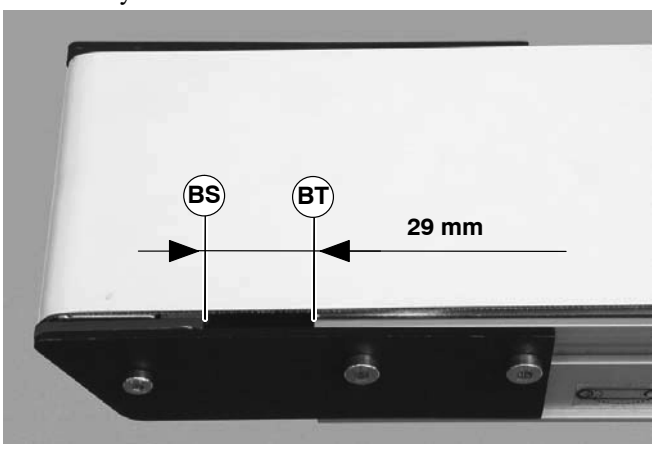

Figure 40

3. If equipped with cam tracking assemblies (T of Figure 39) position against head plates and adjust belt tracking. Refer to “Conveyor Belt Tracking”, page 16.

Conveyor Belt Tensioning

The conveyor is equipped with an automatic tensioning cylinder. No tensioning adjustment is required.

For a new belt, the tension plate (BQ of Figure 41) will be in position indicated below left. When the tension plate extends to position indicated below right, the conveyor belt must be replaced.

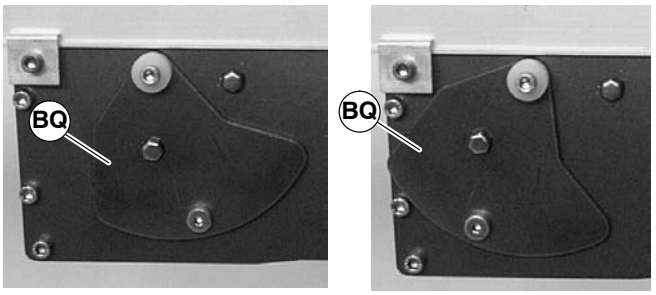

New Belt Change Belt

Figure 41

Conveyor Belt Tracking

V-Guided Belts

V-guided belts do not require tracking adjustment.

Non V-Guided Belts

Non V-guided belt conveyors are equipped with belt tracking cam assemblies (T of Figure 42) for belt tracking adjustment.

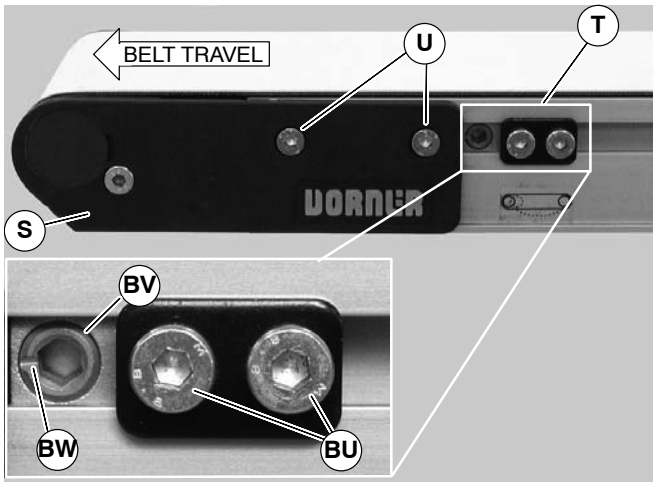

Figure 42

When adjusting belt tracking, always adjust the discharge end of the conveyor first. To adjust belt tracking:

1. Ensure head plate fastening screws (U of Figure 42) on both sides of conveyor are tightened.
2. On both sides of conveyor, loosen two (2) cam fastening screws (BU). Adjust cams (BV) until indicator slots (BW) are horizontal and facing end of conveyor. Then slide cam assemblies against head plates (S) and re-tighten cam fastening screws (BU) to 7 Nm.
3. On the side toward which the belt is tracking, loosen head plate fastening screws (U).
4. With the conveyor running, use a 5 mm hex-key wrench to rotate the tracking cam (BV) in small increments until the belt tracks in the center of the conveyor. Then while holding the cam in position, re-tighten the head plate fastening screws (U) with a 4 mm hex-key wrench to 7 Nm.

Pulley Removal

WARNING

Exposed moving parts can cause severe injury.

LOCK OUT POWER before removing guards or performing maintenance.

Remove the conveyor belt to access the pulley(s). Perform the indicated steps of one of the following procedures:

- "Belt Removal for Conveyor Without Gearmotor Mounting Package or Stands", page 9, steps 1 through 7.
- "Belt Removal for Conveyor With Stands and Gearmotor Mounting Package", page 9, steps 1 through 10.

Remove desired pulley following procedures:

- Conveyor End Pulley Removal
- Module Drive Pulley Removal
- Module Idler Pulley Removal

Conveyor End Pulley Removal

1. On one side of the conveyor, loosen two (2) head plate fastening screws (U of Figure 43) and remove them.

NOTE: To prevent damage to the head plates and pulley, be sure to remove them slowly because they are not attached to pulley.

Figure 43

2. Remove the head plate (BX of Figure 44) from the conveyor frame.

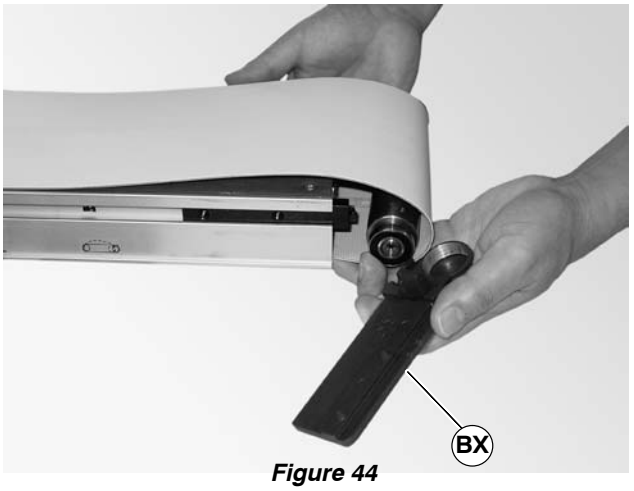

Figure 44

3. Pulley will slide out of opposite head plate and drop into slack of belt (Figure 45).

Figure 45

4. Slide spindle out of the belt loop.

Drive Module Drive Pulley Removal

1. Remove the gearmotor drive package. Refer to "Gearmotor Mounting Package Removal", page 11.
2. Remove the drive module. Refer to "Drive Module Removal", page 12.
3. Remove the drive pulley. Refer to "Belt Removal from Drive Module", page 12, steps 1 and 2.

Drive Module Idler Pulley Removal

1. Remove the gearmotor drive package. Refer to "Gearmotor Mounting Package Removal", page 11.
2. Remove the drive module. Refer to "Drive Module Removal", page 12.
3. Remove the grooved idler pulley. Refer to "Belt Removal from Drive Module", page 12, step 3.
4. Remove smooth idler pulleys:

- For 44 mm, 70 mm or 95 mm wide conveyor, detach E-ring clips and remove washers (BZ of Figure 46). Remove pulley shafts (CA) and pulleys (CB).

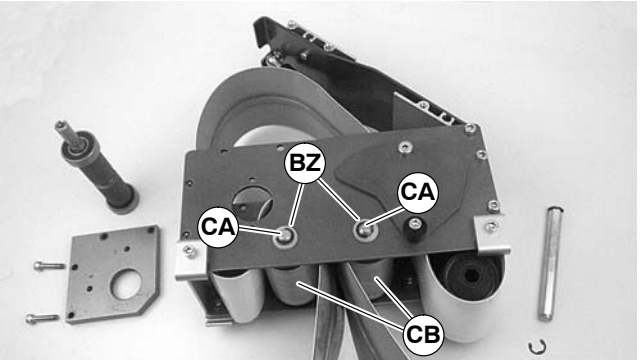

Figure 46

- For 127 mm or wider conveyor, depress both sides of each spring-loaded shaft (CC of Figure 47). Remove pulleys (CD).

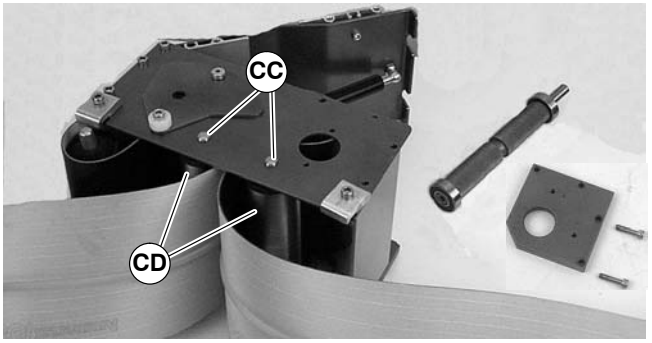

Figure 47

Conveyor Pulley Bearing Removal and Replacement

Removal

IMPORTANT: Do not re-use any removed bearings. Replace them.

NOTE: The conveyor and drive pulley bearing are held onto the pulleys with a mild adhesive and must be removed with a bearing puller or similar device.

1. Use a bearing removal tool, (CF of Figure 48, 49), part number 807−1078, or equivalent and remove both bearings from the conveyor pulley and the drive pulley.

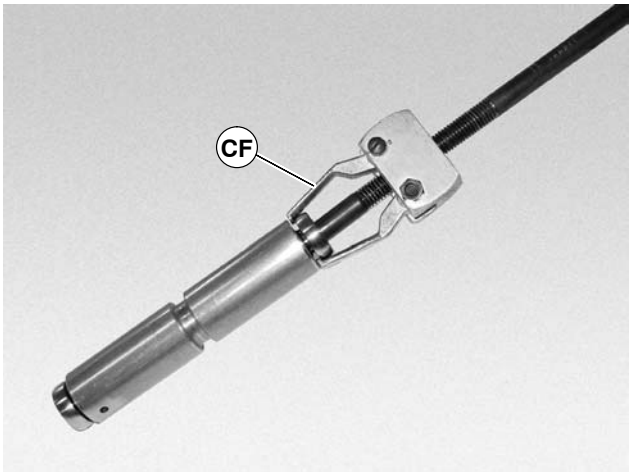

Figure 48 – Conveyor Pulley

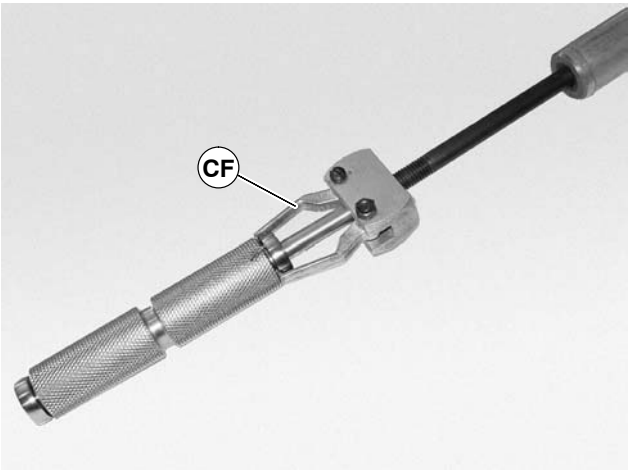

Figure 49 – Drive Pulley

Replacement

1. Inspect the head plates bearing seating surface (CG of Figure 50). If they are worn or damaged, replace the head. See “Service Parts” section, pages 33 to 39.

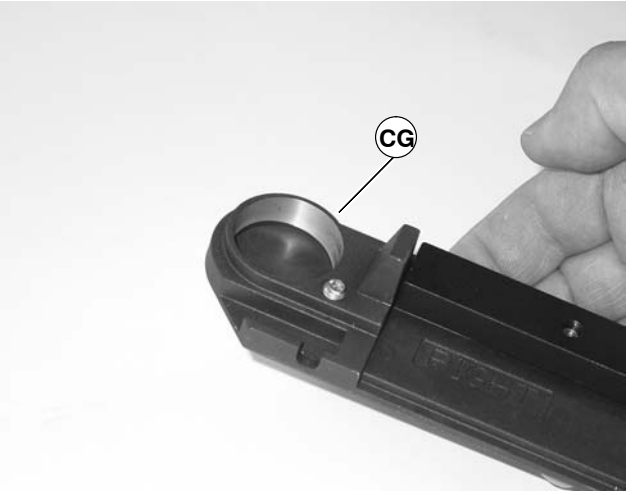

Figure 50

NOTE: Two washers may be required when installing the bearing over the drive shaft on the drive pulley, if the bearing installation tool is not long enough to fit the length of the drive shaft.

2. Use a bearing installation tool, (CI of Figure 51), part number 450292, or equivalent and press bearings onto the conveyor pulley and drive pulley.

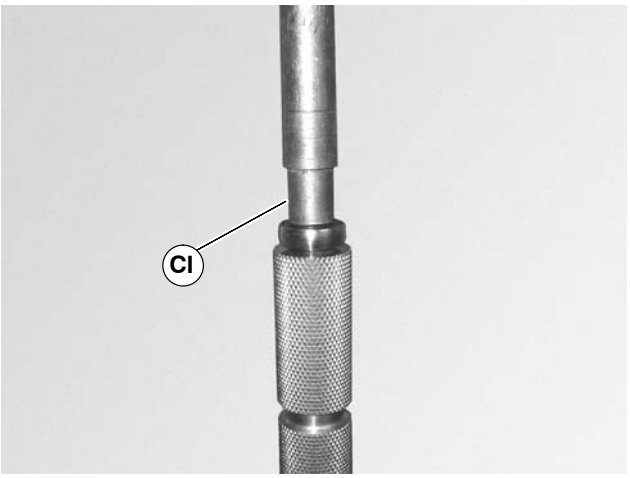

Figure 51

Conveyor Pulley Installation

1. With opposite head plate installed, position the conveyor pulley through the loop of the belt, into the opposite head plate.

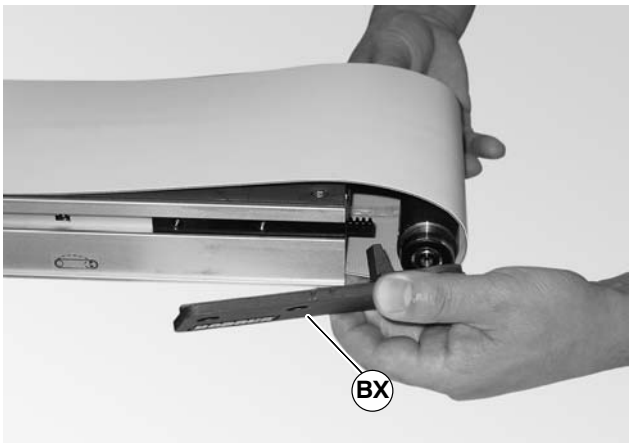

Figure 52

2. Place the head plate (BX of Figure 52) and attach the head plate to the conveyor frame with the two (2) plates removed. tighten screws 7 Nm.

Drive Module Drive Pulley

1. Reverse "Drive Module Drive Pulley Removal" procedure on page 17.
2. Re-install belt on end of conveyor, then tension the belt. See "Conveyor Tension End Adjustment", page 14.
3. Re-position the cam assemblies against the head plates and adjust belt tracking. See "Conveyor Belt Tracking", page 16.

Drive Module Idler Pulley

1. Reverse "Drive Module Idler Pulley Removal" procedure on page 17.
2. Re-install belt on end of conveyor, then tension the belt. See "Conveyor Tension End Adjustment", page 14.
3. Re-position the cam assemblies against the head plates and adjust belt tracking. See "Conveyor Belt Tracking", page 16.

Nose Bar Bearing Replacement

WARNING

Exposed moving parts can cause severe injury.

LOCK OUT POWER before removing guards or performing maintenance.

1. Remove the conveyor belt to access the bearings. Perform the indicated steps of one of the following procedures:
   - "Belt Removal for Conveyor Without Gearmotor Mounting Package or Stands", page 9, steps 1 through 7.
   - "Belt Removal for Conveyor With Stands and Gearmotor Mounting Package", page 9, steps 1 through 10.
2. On one side of conveyor, use a 3 mm and 4 mm hex-key wrench to remove head plate fastening screws (CH & U of Figure 53) and remove head plate (S).

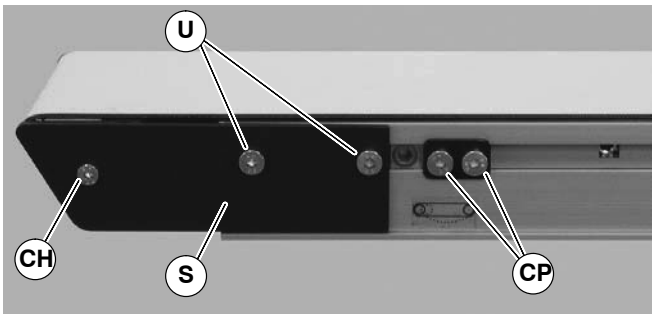

Figure 53

3. Slide bearing rods (CI of Figure 54) out side of conveyor and replace bearings (CJ) as necessary.

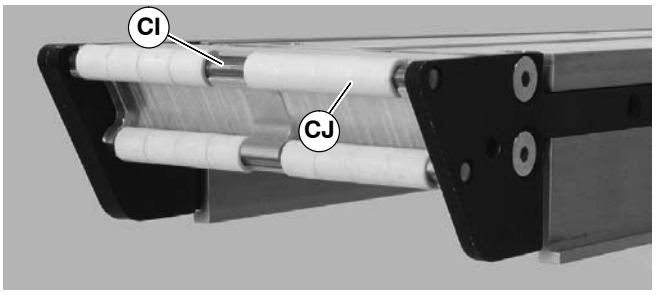

Figure 54

4. After replacing bearings, re-install head plate (S of Figure 53). Use a 3 mm hex-key wrench to tighten one (1) fastening screw (CH) to 3.4 Nm. Leave two (2) fastening screws (U) loose for belt tensioning.
5. Re-install belt on end of conveyor, then tension the belt. See "Conveyor Tension End Adjustment", page 14.
6. Re-position the cam assemblies against the head plates and adjust belt tracking. See "Conveyor Belt Tracking", page 16.

Service Parts

NOTE: For replacement parts other than those shown in this section, contact an authorized Dorner Service Center or the factory. Key Service Parts and Kits are identified by the Performance Parts Kits logo . Dorner recommends keeping these parts on hand.

51mm Wide Conveyor

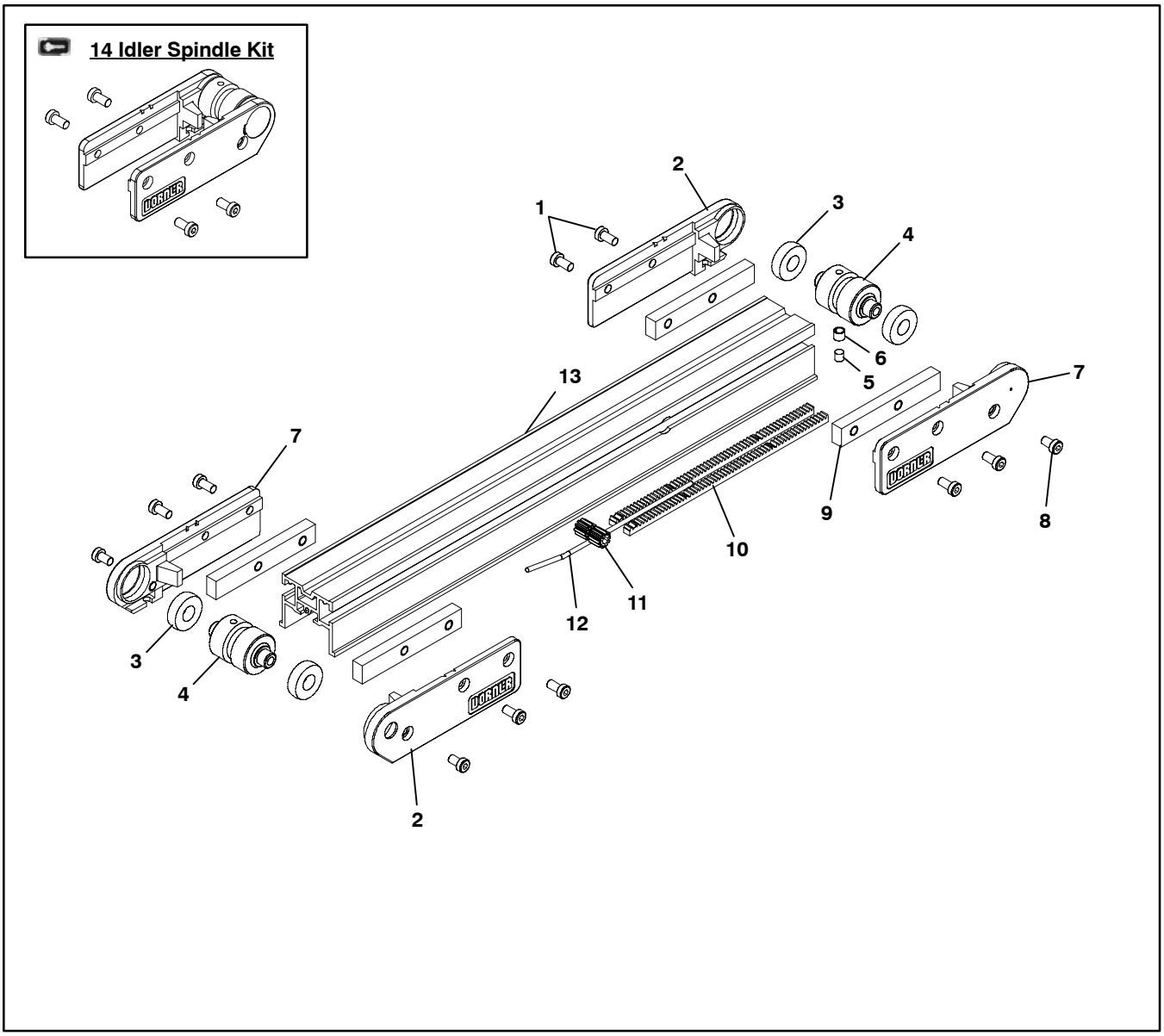

Item	Part Number	Description
1	920692M	Socket Head Screw M6 x 12mm
2	240425	Head Plate LH
3	240328	Bearing
4	247302	Idler Spindle 51mm
5	808–020	Magnet 6mm Dia. x 6mm long
6	450226SSP	Sleeve, 6mm Magnet Stainless Steel
7	240426	Head Plate RH
8	920691M	Socket Head Screw M6 x 10mm
9	240329	Tension Slide Bar
10	240420	Rack Gear 14.5 Degree PA x 24 P
11	240423	Pinion 51mm
12	240422	Pinion Pin
13	See Frame Chart	51mm Frame
14	22T–02	Idler Spindle Kit (Includes Items 1 through 8)

Item 13: 51mm Conveyor Frame	
Length	Part Number
610mm	240402–01908
914mm	240402–03108
1219mm	240402–04308
1524mm	240402–05508
1829mm	240402–06708
2134mm	240402–07908
2438mm	240402–09108
2743mm	240402–10308
3048mm	240402–11508
3353mm	240402–12708
3658mm	240402–13908
3962mm	240402–07200 240402–07908
4267mm	240402–07200 240402–09108
4572mm	240402–07200 240402–10308
4877mm	240402–07200 240402–11508
5182mm	240402–07200 240402–12708
5486mm	240402–07200 240402–13908
5791mm	240402–14400 240402–07908
6096mm	240402–14400 240402–09108
6401mm	240402–14400 240402–10308
6706mm	240402–14400 240402–11508
7010mm	240402–14400 240402–12708
7315mm	240402–14400 240402–13908

Service Parts

76mm to 152mm Wide Conveyor

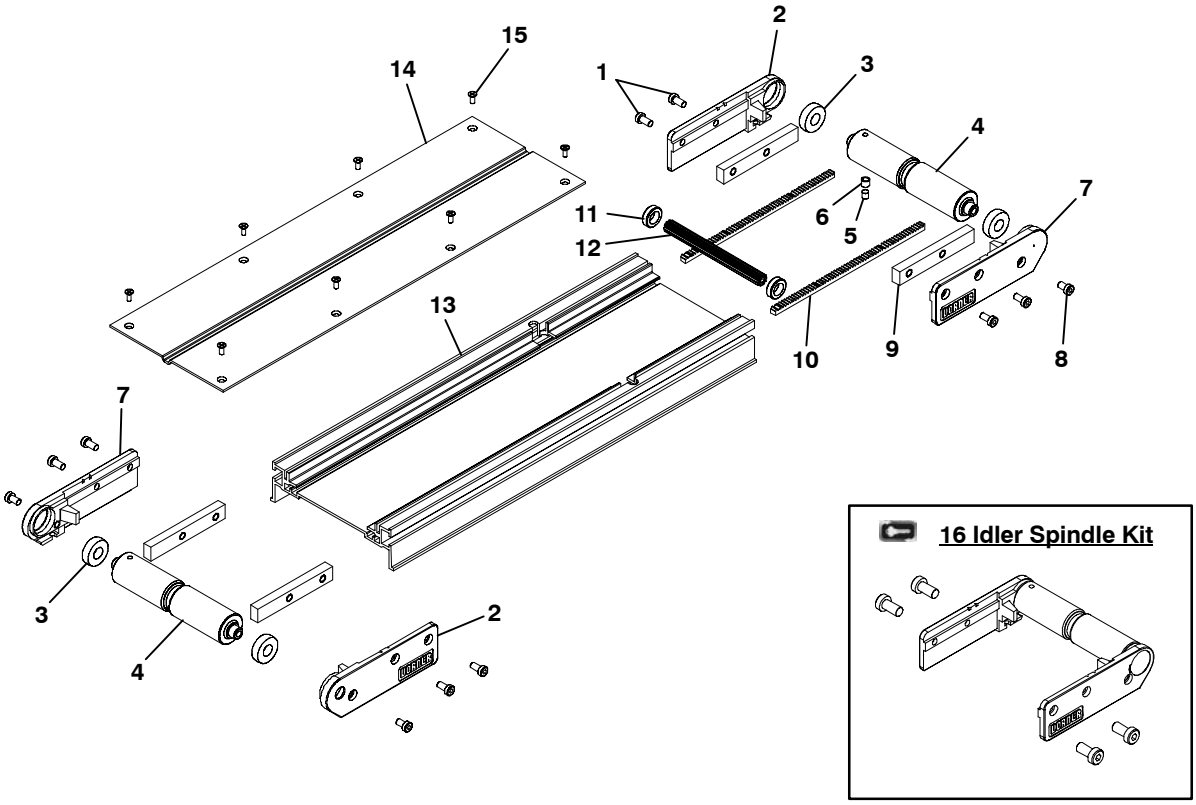

Item	Part Number	Description
1	920692M	Socket Head Screw M6 x 12mm
2	240425	Head Plate LH
3	240328	Bearing
4	2473WW	Idler Spindle
5	808–020	Magnet 6mm Dia. x 6mm long
6	450226SSP	Sleeve, 6mm Magnet Stainless Steel
7	240426	Head Plate RH
8	920691M	Socket Head Screw M6 x 10mm
9	240329	Tension Slide Bar
10	240420	Rack Gear 14.5 Degree PA x 24P
11	240421	Pinion Bushing
12	2030WWM	Pinion Gear
13	See Frame Chart	Conveyor Frame
14	See Bed Plate Chart	Conveyor Bed Plate
15	807–1105	Flat Head Torx Screw M6 x 10mm
16	22T–WW	Idler Spindle Kit (Includes Items 1 through 8)
WW = Conveyor width reference: 03, 04, 05, 06		

Item 13: Conveyor Frame	
Length	Part Number
610mm	2404WW–01908
914mm	2404WW–03108
1219mm	2404WW–04308
1524mm	2404WW–05508
1829mm	2404WW–06708
2134mm	2404WW–07908
2438mm	2404WW–09108
2743mm	2404WW–10308
3048mm	2404WW–11508
3353mm	2404WW–12708
3658mm	2404WW–13908
3962mm	2404WW–07200 2404WW–07908
4267mm	2404WW–07200 2404WW–09108
4572mm	2404WW–07200 2404WW–10308
4877mm	2404WW–07200 2404WW–11508
5182mm	2404WW–07200 2404WW–12708
5486mm	2404WW–07200 2404WW–13908
5791mm	2404WW–14400 2404WW–07908
6096mm	2404WW–14400 2404WW–09108
6401mm	2404WW–14400 2404WW–10308
6706mm	2404WW–14400 2404WW–11508
7010mm	2404WW–14400 2404WW–12708
7315mm	2404WW–14400 2404WW–13908
WW = Conveyor width reference: 03, 04, 05, 06	

Item 14: Bed Plate	
Length	Part Number
610mm	2405WW–01900
914mm	2405WW–03100
1219mm	2405WW–04300
1524mm	2405WW–05500
1829mm	2405WW–06700
2134mm	2405WW–07900
2438mm	2405WW–09100
2743mm	2405WW–10300
3048mm	2405WW–11500
3353mm	2405WW–12700
3658mm	2405WW–13900
3962mm	2405WW–07196 2405WW–07900
4267mm	2405WW–07196 2405WW–09100
4572mm	2405WW–07196 2405WW–10300
4877mm	2405WW–07196 2405WW–11500
5182mm	2405WW–07196 2405WW–12700
5486mm	2405WW–07196 2405WW–13900
5791mm	2405WW–14396 2405WW–07900
6096mm	2405WW–14396 2405WW–09100
6401mm	2405WW–14396 2405WW–10300
6706mm	2405WW–14396 2405WW–11500
7010mm	2405WW–14396 2405WW–12700
7315mm	2405WW–14396 2405WW–13900
WW = Conveyor width reference: 03, 04, 05, 06	

203mm to 305mm Wide Conveyor

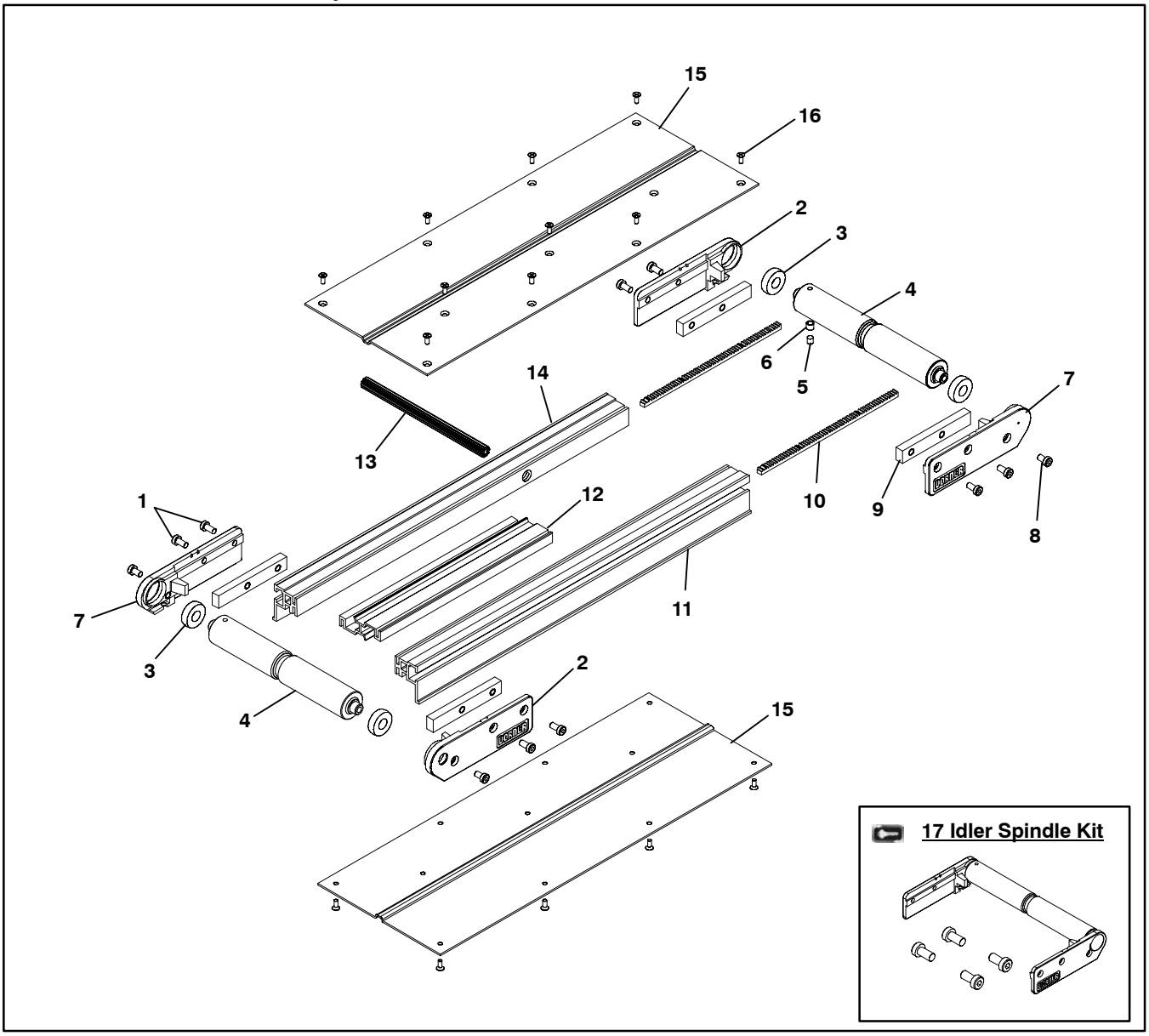

Item	Part Number	Description
1	920692M	Socket Head Screw M6 x 12mm
2	240425	Head Plate LH
3	240328	Bearing
4	2473WW	Idler Spindle
5	808–020	Magnet 6mm Dia. x 6mm long
6	450226SSP	Sleeve, 6mm Magnet Stainless Steel
7	240426	Head Plate RH
8	920691M	Socket Head Screw M6 x 10mm
9	240329	Tension Slide Bar
10	240420	Rack Gear 14.5 Degree PA x 24 P
11	See Chart	Side Rail RH
12	See Chart	Center Rail
13	2030WWM	Pinion Gear
14	See Chart	Side Rail LH
15	See Chart	Conveyor Bed Plate
16	807–1105	Flat Head Torx Screw M6 x 10mm
17	22T–WW	Idler Spindle Kit (Includes Items 1 through 8)
WW = Conveyor width reference: 08, 10, 12		

Item 11: Side Rail RH	
Length	Part Number
610mm	240412–01908
914mm	240412–03108
1219mm	240412–04308
1524mm	240412–05508
1829mm	240412–06708
2134mm	240412–07908
2438mm	240412–09108
2743mm	240412–10308
3048mm	240412–11508
3353mm	240412–12708
3658mm	240412–13908
3962mm	240412–07200 240412–07908
4267mm	240412–07200 240412–09108
4572mm	240412–07200 240412–10308
4877mm	240412–07200 240412–11508
5182mm	240412–07200 240412–12708
5486mm	240412–07200 240412–13908
5791mm	240412–14400 240412–07908
6096mm	240412–14400 240412–09108
6401mm	240412–14400 240412–10308
6706mm	240412–14400 240412–11508
7010mm	240412–14400 240412–12708
7315mm	240412–14400 240412–13908

Item 12: Center Rail	
Length	Part Number
610mm	240414–01273
914mm	240414–02473
1219mm	240414–03673
1524mm	240414–04873
1829mm	240414–06073
2134mm	240414–07273
2438mm	240414–08473
2743mm	240414–09673
3048mm	240414–10873
3353mm	240414–12073
3658mm	240414–13273
3962mm	240414–07200 240414–07273
4267mm	240414–07200 240414–08473
4572mm	240414–07200 240414–09673
4877mm	240414–07200 240414–10873
5182mm	240414–07200 240414–12073
5486mm	240414–07200 240414–13273
5791mm	240414–14400 240414–07273
6096mm	240414–14400 240414–08473
6401mm	240414–14400 240414–09673
6706mm	240414–14400 240414–10873
7010mm	240414–14400 240414–12073
7315mm	240414–14400 240414–13273

Item 14: Side Rail LH	
Length	Part Number
610mm	2405WW–01900
914mm	2405WW–03100
1219mm	2405WW–04300
1524mm	2405WW–05500
1829mm	2405WW–06700
2134mm	2405WW–07900
2438mm	2405WW–09100
2743mm	2405WW–10300
3048mm	2405WW–11500
3353mm	2405WW–12700
3658mm	2405WW–13900
3962mm	2405WW–07196 2405WW–07900
4267mm	2405WW–07196 2405WW–09100
4572mm	2405WW–07196 2405WW–10300
4877mm	2405WW–07196 2405WW–11500
5182mm	2405WW–07196 2405WW–12700
5486mm	2405WW–07196 2405WW–13900
5791mm	2405WW–14396 2405WW–07900
6096mm	2405WW–14396 2405WW–09100
6401mm	2405WW–14396 2405WW–10300
6706mm	2405WW–14396 2405WW–11500
7010mm	2405WW–14396 2405WW–12700
7315mm	2405WW–14396 2405WW–13900
WW = Conveyor width reference: 08, 10, 12	

Item 15: Bed Plate	
Length	Part Number
610mm	240413–01908
914mm	240413–03108
1219mm	240413–04308
1524mm	240413–05508
1829mm	240413–06708
2134mm	240413–07908
2438mm	240413–09108
2743mm	240413–10308
3048mm	240413–11508
3353mm	240413–12708
3658mm	240413–13908
3962mm	240413–07200 240413–07908
4267mm	240413–07200 240413–09108
4572mm	240413–07200 240413–10308
4877mm	240413–07200 240413–11508
5182mm	240413–07200 240413–12708
5486mm	240413–07200 240413–13908
5791mm	240413–14400 240413–07908
6096mm	240413–14400 240413–09108
6401mm	240413–14400 240413–10308
6706mm	240413–14400 240413–11508
7010mm	240413–14400 240413–12708
7315mm	240413–14400 240413–13908

457mm to 610mm Wide Conveyor

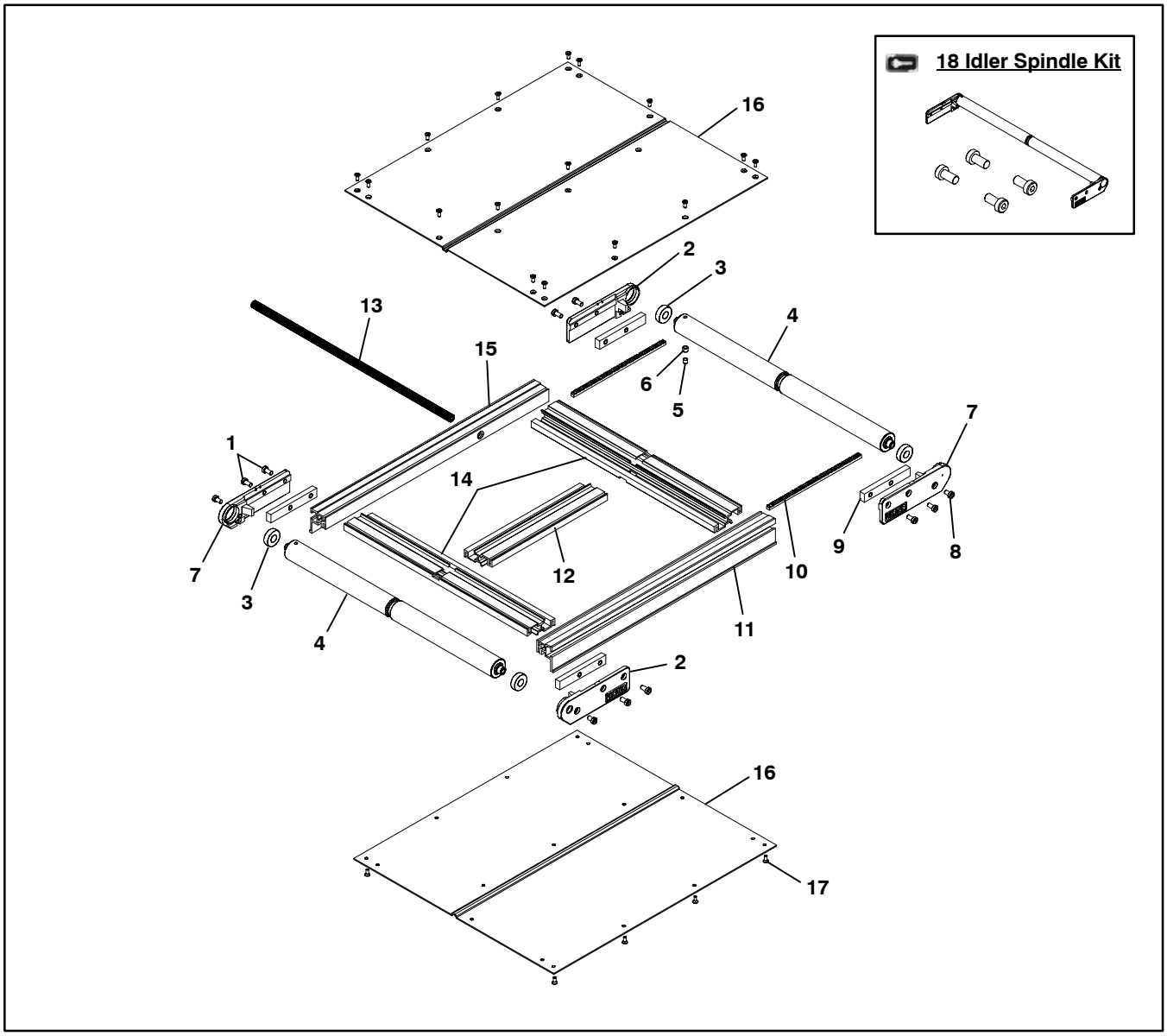

Item	Part Number	Description
1	920692M	Socket Head Screw M6 x 12mm
2	240425	Head Plate LH
3	240328	Bearing
4	2473WW	Idler Spindle
5	808–020	Magnet 6mm Dia. x 6mm long
6	450226SSP	Sleeve, 6mm Magnet Stainless Steel
7	240426	Head Plate RH
8	920691M	Socket Head Screw M6 x 10mm
9	240329	Tension Slide Bar
10	240420	Rack Gear 14.5 Degree PA x 24 P
11	See Chart	Side Rail RH
12	See Chart	Center Rail
13	2030WWM	Pinion Gear
14	240417	Center Rail Cross Support 457mm
	240418	Center Rail Cross Support 533mm
	240419	Center Rail Cross Support 610mm
15	See Chart	Side Rail LH
16	See Chart	Conveyor Bed Plate
17	807–1105	Flat Head Torx Screw M6 x 10mm
18	22T–WW	Idler Spindle Kit (Includes Items 1 through 2 and 4 through 9)
WW = Conveyor width reference: 18, 21, 24		

Item 11: Side Rail RH	
Length	Part Number
610mm	240412–01908
914mm	240412–03108
1219mm	240412–04308
1524mm	240412–05508
1829mm	240412–06708
2134mm	240412–07908
2438mm	240412–09108
2743mm	240412–10308
3048mm	240412–11508
3353mm	240412–12708
3658mm	240412–13908
3962mm	240412–07200 240412–07908
4267mm	240412–07200 240412–09108
4572mm	240412–07200 240412–10308
4877mm	240412–07200 240412–11508
5182mm	240412–07200 240412–12708
5486mm	240412–07200 240412–13908
5791mm	240412–14400 240412–07908
6096mm	240412–14400 240412–09108
6401mm	240412–14400 240412–10308
6706mm	240412–14400 240412–11508
7010mm	240412–14400 240412–12708
7315mm	240412–14400 240412–13908

Item 12: Center Rail	
Length	Part Number
610mm	240414–00998
914mm	240414–02198
1219mm	240414–03398
1524mm	240414–04598
1829mm	240414–05798
2134mm	240414–06998
2438mm	240414–08198
2743mm	240414–09398
3048mm	240414–10598
3353mm	240414–11798
3658mm	240414–12998
3962mm	240414–06600 240414–06998
4267mm	240414–06600 240414–08198
4572mm	240414–06600 240414–09398
4877mm	240414–06600 240414–10598
5182mm	240414–06600 240414–11798
5486mm	240414–06600 240414–12998
5791mm	240414–13800 240414–06998
6096mm	240414–13800 240414–08198
6401mm	240414–13800 240414–09398
6706mm	240414–13800 240414–10598
7010mm	240414–13800 240414–11798
7315mm	240414–13800 240414–12998

Item 15: Side Rail LH	
Length	Part Number
610mm	2405WW–01900
914mm	2405WW–03100
1219mm	2405WW–04300
1524mm	2405WW–05500
1829mm	2405WW–06700
2134mm	2405WW–07900
2438mm	2405WW–09100
2743mm	2405WW–10300
3048mm	2405WW–11500
3353mm	2405WW–12700
3658mm	2405WW–13900
3962mm	2405WW–07196 2405WW–07900
4267mm	2405WW–07196 2405WW–09100
4572mm	2405WW–07196 2405WW–10300
4877mm	2405WW–07196 2405WW–11500
5182mm	2405WW–07196 2405WW–12700
5486mm	2405WW–07196 2405WW–13900
5791mm	2405WW–14396 2405WW–07900
6096mm	2405WW–14396 2405WW–09100
6401mm	2405WW–14396 2405WW–10300
6706mm	2405WW–14396 2405WW–11500
7010mm	2405WW–14396 2405WW–12700
7315mm	2405WW–14396 2405WW–13900
WW = Conveyor width reference: 18, 21, 24	

Item 16: Bed Plate	
Length	Part Number
610mm	240413–01908
914mm	240413–03108
1219mm	240413–04308
1524mm	240413–05508
1829mm	240413–06708
2134mm	240413–07908
2438mm	240413–09108
2743mm	240413–10308
3048mm	240413–11508
3353mm	240413–12708
3658mm	240413–13908
3962mm	240413–07200 240413–07908
4267mm	240413–07200 240413–09108
4572mm	240413–07200 240413–10308
4877mm	240413–07200 240413–11508
5182mm	240413–07200 240413–12708
5486mm	240413–07200 240413–13908
5791mm	240413–14400 240413–07908
6096mm	240413–14400 240413–09108
6401mm	240413–14400 240413–10308
6706mm	240413–14400 240413–11508
7010mm	240413–14400 240413–12708
7315mm	240413–14400 240413–13908

2200 Center Drive Module

Drive Module for 127mm to 610mm Wide Conveyors

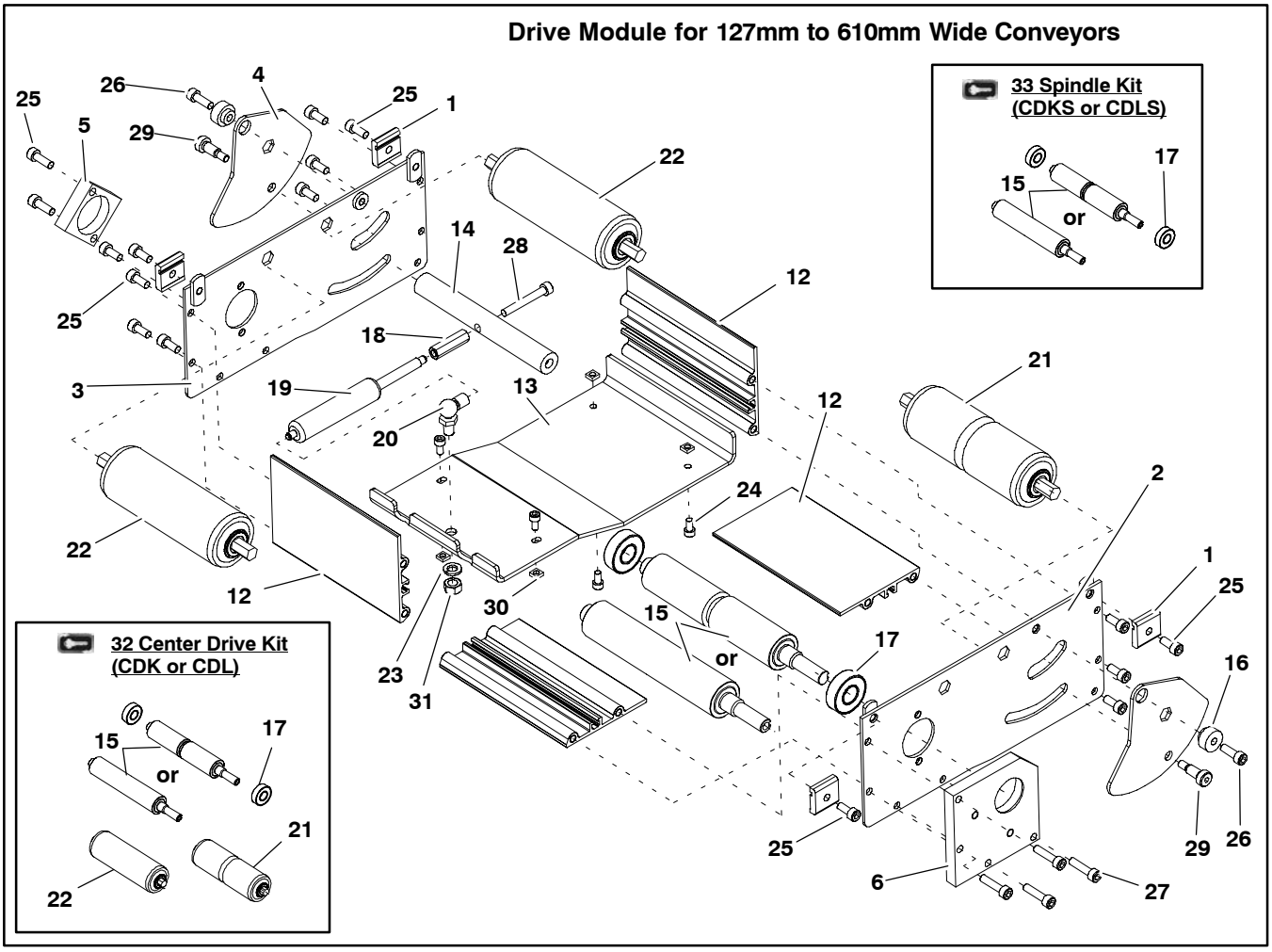

Drive Module for 51mm, 76mm and 102mm Wide Conveyors

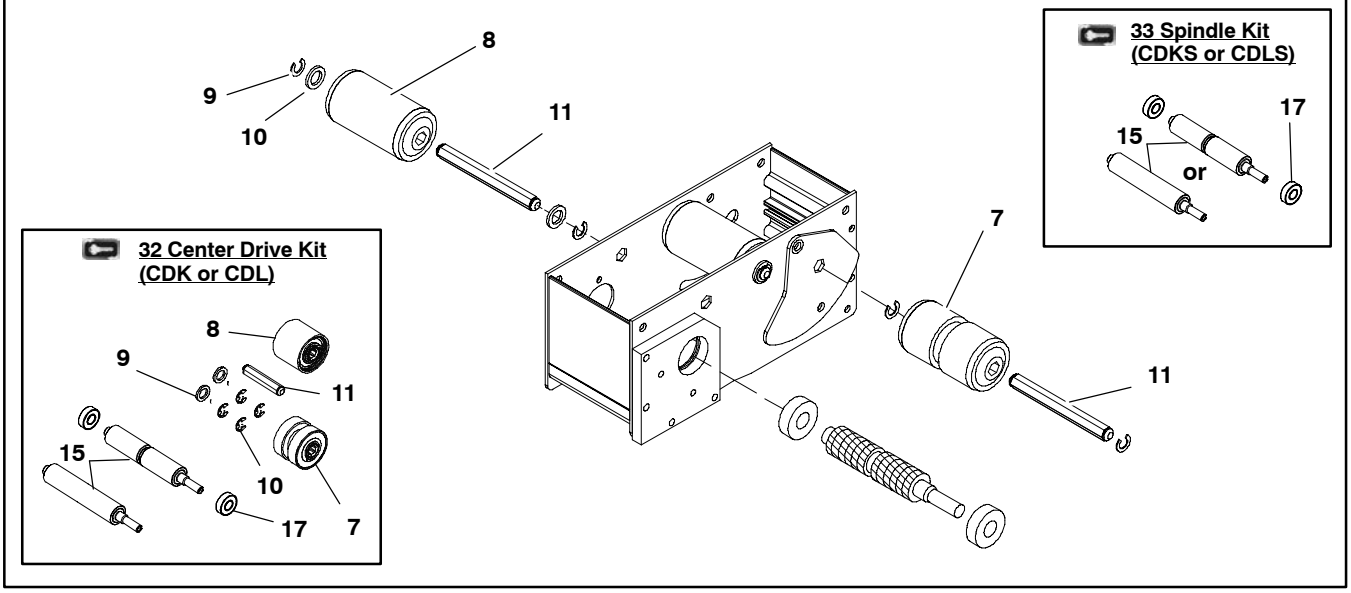

Item	Part Number	Description
1	204566	Module Mounting Clip
2	202633M	Side Plate LH
3	202634M	Side Plate RH
4	463026M	Pivot Tension Plate
5	463028M	Bearing Mounting Block
6	463029M	Bearing–Drive Mounting Plate
7	463044	Roller 1.9” .44hex Grv 51mm
	463045	Roller 1.9” .44hex Grv 76mm
	807–1001	Roller 1.9” .44hex Grv 102mm
8	463046	Roller 1.9” .44hex SS Flat 51mm
	807–1007	Roller 1.9” .44hex SS Flat 76mm
	807–1008	Roller 1.9” .44hex SS Flat 102mm
9	915-215	E-Ring Clip (0.44 diameter)
10	801-115	Washer
11	4634WW	Pulley Shaft
12	4638WW	Center Drive Rail
13	4632WWM	Center Dr Bottom Cover 51mm through 457mm
	463205M 463208M (2x)	Center Dr Bottom Cover 533mm
	463212M (2x)	Center Dr Bottom Cover 610mm
14	4633WWM	Center Dr Tensioning Rod
15	4637WWM	Center Drive Spindle – Knurled
	4639WWM	Center Drive Spindle – Lagged
16	801–117	Nylon Bushing
17	802–124	Ball Bearing
18	807–983	Hex Standoff 13mm x 35mm LG M6
19	807–1040	Gas Spring 51mm w/o Nosebar
	807–1310	Gas Spring 51mm w/Nosebar
	807–986	Gas Spring 76mm w/o Nosebar
	807–1310	Gas Spring 76mm w/Nosebar
	807–985	Gas Spring 102–152mm
	807–984	Gas Spring 203–305mm
	807–985	Gas Spring 457–610mm (2x)

20	807–987	Steel Ball Joint M6 x M8
21	807–1002	Roller 1.9” .44 Hex Grv 127mm
	807–1003	Roller 1.9” .44 Hex Grv 152mm
	807–1004	Roller 1.9” .44 Hex Grv 203mm
	807–1005	Roller 1.9” .44 Hex Grv 203mm
	807–1006	Roller 1.9” .44 Hex Grv 305mm
	807–1091	Roller 1.9” .44 Hex Grv 457mm
	807–1092	Roller 1.9” .44 Hex Grv 533mm
	807–1093	Roller 1.9” .44 Hex Grv 610mm
22	807–1009	Roller 1.9” .44 Hex Flat 51mm
	807–1010	Roller 1.9” .44 Hex Flat 152mm
	807–1011	Roller 1.9” .44 Hex Flat 203mm
	807–1012	Roller 1.9” .44 Hex Flat 203mm
	807–1013	Roller 1.9” .44 Hex Flat 305mm
	807–1088	Roller 1.9” .44 Hex Flat 457mm
	807–1089	Roller 1.9” .44 Hex Flat 533mm
	807–1090	Roller 1.9” .44 Hex Flat 610mm
23	911–120	Spring Lock Washer
24	920510M	Socket Head Screw M5 x 10mm
25	920620M	Socket Head Screw M6 x 20mm
26	920618M	Socket Head Screw M6 x 18mm
27	920630M	Socket Head Screw M6 x 30mm
28	920625M	Socket Head Screw M6 x 25mm
29	940812M	SHLD Screw 8mm Dia. x 12mm
30	990503M	Square Nut, Heavy M5 – .8
31	990801M	Hex Nut, Full M8 – 1.25
32	CDK–WW	Center Drive Repair Kit – Knurled (Includes Items 7 through 11, 15, and 17)
	CDKLWW	Center Drive Repair Kit – Lagged (Includes Items 7 through 11, 15, and 17)
33	CDKS–WW	Spindle Repair Kit – Knurled (Includes Items 15 and 17)
	CDLS–WW	Spindle Repair Kit – Lagged (Includes Items 15 and 17)
WW = Conveyor width ref.: 02, 03, 04, 05, 06, 08, 10, 12, 18, 21, 24		

Nosebar End Assembly

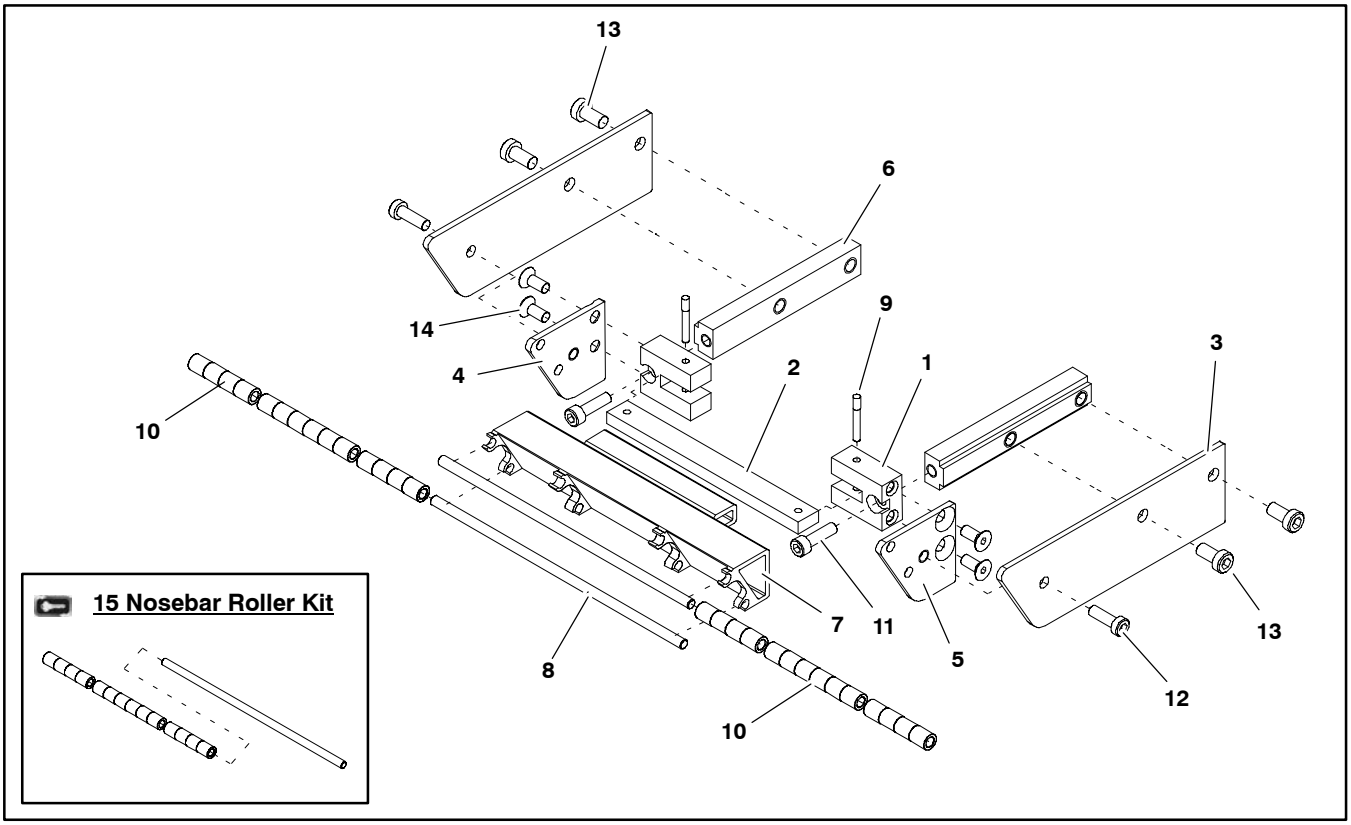

Item	Part Number	Description
1	201965	Mounting Block, PLT Spindle
2	2076WW	Flex–Link Bar
3	241125	Outer Side Plate
4	241126	Inner Side Plate LH
5	241127	Inner Side Plate RH
6	241128	Head Plate Bar
7	2412WW	Nosebar
8	2413WW	Nosebar Rod
9	200695P	Knurl Pin 3mm DIA x 24mm Lg
10	801–122	Nose Bar Roller
11	920518M	Sockety Head Screw M5 x 18mm
12	920593M	Socket Head Screw M5 x 16mm
13	920692M	Socket Head Screw M6 x 12mm
14	930512M	Flat Head Screw M5 x 12mm
15	22N–WW	Nosebar Roller Kit (Includes Items 8 and 10)
WW= Conveyor width ref.: 02, 03, 04, 05, 06, 08, 10, 12, 18, 21, 24		

–04 76mm Aluminum Side

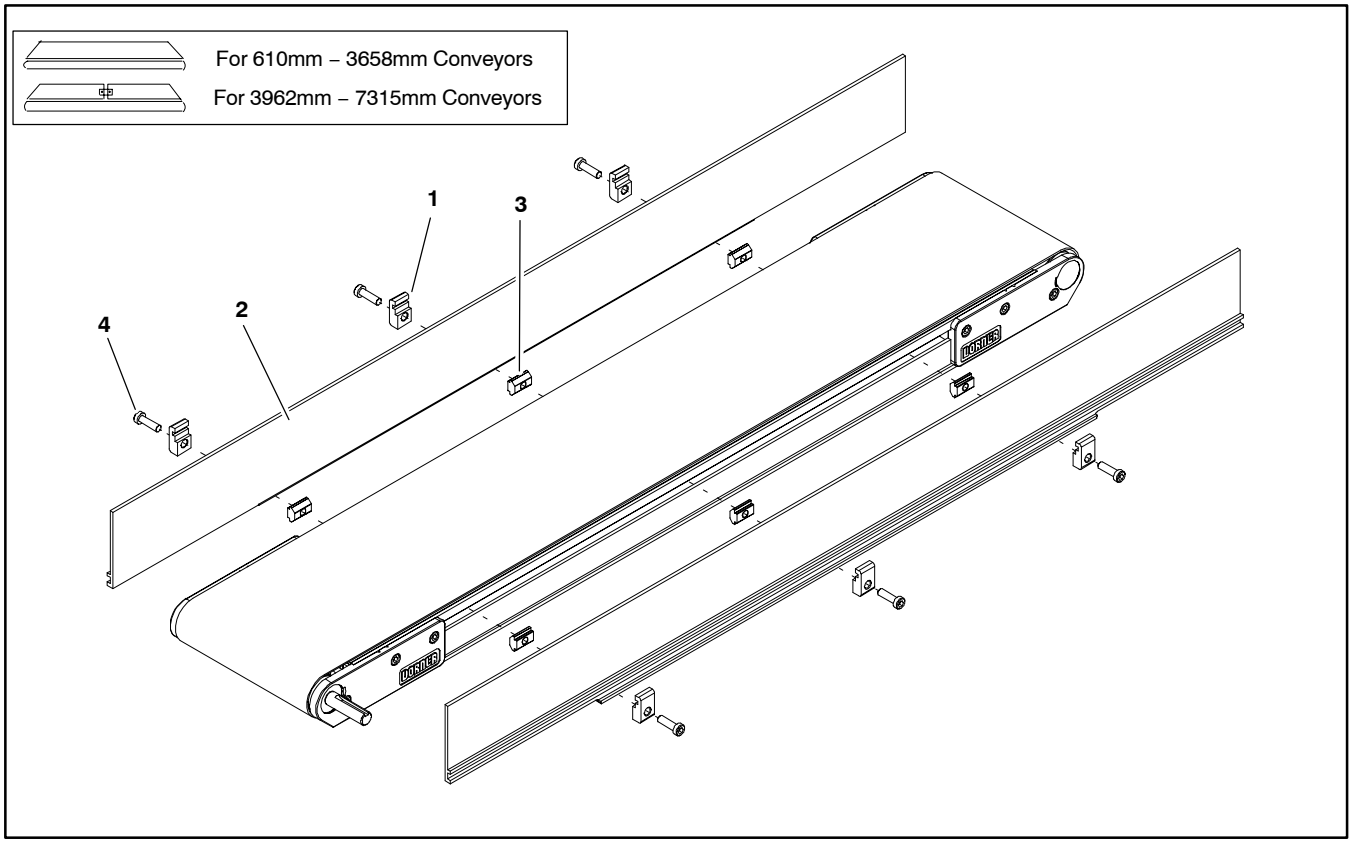

Item	Part Number	Description
1	200121	Guide Retaining Clip
2	See Chart on Next Page	2200 Guide 76mm HS
3	200695P	Single Drop–in Tee Bar
4	920694M	Socket Head Screw M6 x 20mm

Item 2: 2200 Guide 76mm HS			
Length		End Guide	End Guide
610mm	Left Hand	280403–02400	N/A
	Right hand	280403–02400	N/A
914mm	Left Hand	280403–03600	N/A
	Right hand	280403–03600	N/A
1219mm	Left Hand	280403–04800	N/A
	Right hand	280403–04800	N/A
1524mm	Left Hand	280403–06000	N/A
	Right hand	280403–06000	N/A
1829mm	Left Hand	280403–07200	N/A
	Right hand	280403–07200	N/A
2134mm	Left Hand	280403–08400	N/A
	Right hand	280403–08400	N/A
2438mm	Left Hand	280403–09600	N/A
	Right hand	280403–09600	N/A
2743mm	Left Hand	280403–10800	N/A
	Right hand	280403–10800	N/A
3048mm	Left Hand	280403–12000	N/A
	Right hand	280403–12000	N/A
3353mm	Left Hand	280403–13200	N/A
	Right hand	280403–13200	N/A
3658mm	Left Hand	280403–14400	N/A
	Right hand	280403–14400	N/A

3962mm	Left Hand	280401–07500	280401–08100
	Right hand	280402–07500	280402–08100
4267mm	Left Hand	280401–07500	280401–09300
	Right hand	280402–07500	280402–09300
4572mm	Left Hand	280401–07500	280401–10500
	Right hand	280402–07500	280402–10500
4877mm	Left Hand	280401–07500	280401–11700
	Right hand	280402–07500	280402–11700
5182mm	Left Hand	280401–07500	280401–12900
	Right hand	280402–07500	280402–12900
5486mm	Left Hand	280401–07500	280401–14100
	Right hand	280402–07500	280402–14100
5791mm	Left Hand	280401–14700	280401–08100
	Right hand	280402–14700	280402–08100
6096mm	Left Hand	280401–14700	280401–09300
	Right hand	280402–14700	280402–09300
6401mm	Left Hand	280401–14700	280401–10500
	Right hand	280402–14700	280402–10500
6706mm	Left Hand	280401–14700	280401–11700
	Right hand	280402–14700	280402–11700
7010mm	Left Hand	280401–14700	280401–12900
	Right hand	280402–14700	280402–12900
7315mm	Left Hand	280401–14700	280401–14100
	Right hand	280402–14700	280402–14100

–05 38mm Aluminum Side

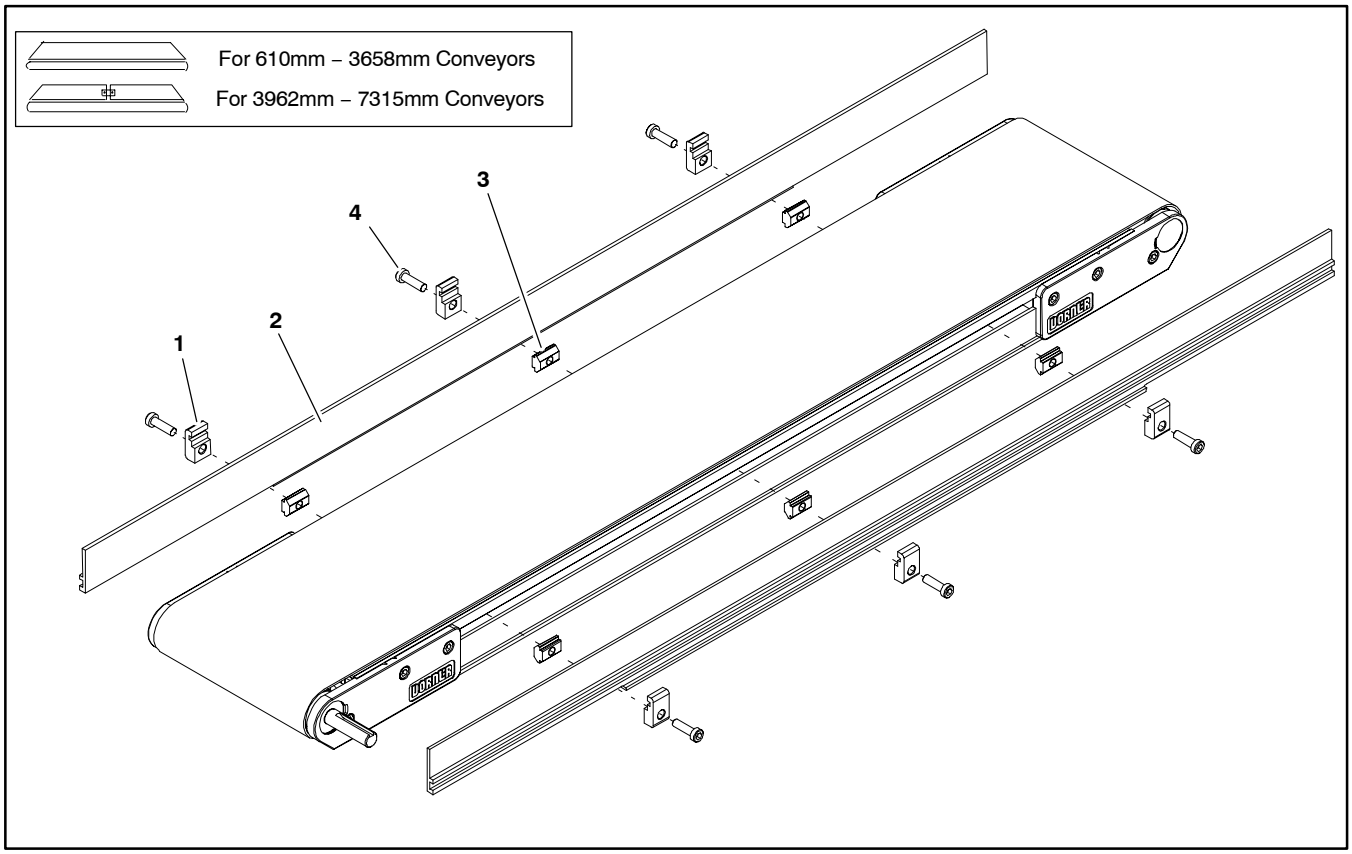

Item	Part Number	Description
1	200121	Guide Retaining Clip
2	See Chart on Next Page	2200 Guide 38mm HS
3	639971M	Single Drop–in Tee Bar
4	920694M	Socket Head Screw M6 x 20mm

Item 2: 2200 Guide 38mm HS			
Length		End Guide	End Guide
610mm	Left Hand	280503–02400	N/A
	Right hand	280503–02400	N/A
914mm	Left Hand	280503–03600	N/A
	Right hand	280503–03600	N/A
1219mm	Left Hand	280503–04800	N/A
	Right hand	280503–04800	N/A
1524mm	Left Hand	280503–06000	N/A
	Right hand	280503–06000	N/A
1829mm	Left Hand	280503–07200	N/A
	Right hand	280503–07200	N/A
2134mm	Left Hand	280503–08400	N/A
	Right hand	280503–08400	N/A
2438mm	Left Hand	280503–09600	N/A
	Right hand	280503–09600	N/A
2743mm	Left Hand	280503–10800	N/A
	Right hand	280503–10800	N/A
3048mm	Left Hand	280503–12000	N/A
	Right hand	280503–12000	N/A
3353mm	Left Hand	280503–13200	N/A
	Right hand	280503–13200	N/A
3658mm	Left Hand	280503–14400	N/A
	Right hand	280503–14400	N/A

3962mm	Left Hand	280501–07500	280501–08100
	Right hand	280502–07500	280502–08100
4267mm	Left Hand	280501–07500	280501–09300
	Right hand	280502–07500	280502–09300
4572mm	Left Hand	280501–07500	280501–10500
	Right hand	280502–07500	280502–10500
4877mm	Left Hand	280501–07500	280501–11700
	Right hand	280502–07500	280502–11700
5182mm	Left Hand	280501–07500	280501–12900
	Right hand	280502–07500	280502–12900
5486mm	Left Hand	280501–07500	280501–14100
	Right hand	280502–07500	280502–14100
5791mm	Left Hand	280501–14700	280501–08100
	Right hand	280502–14700	280502–08100
6096mm	Left Hand	280501–14700	280501–09300
	Right hand	280502–14700	280502–09300
6401mm	Left Hand	280501–14700	280501–10500
	Right hand	280502–14700	280502–10500
6706mm	Left Hand	280501–14700	280501–11700
	Right hand	280502–14700	280502–11700
7010mm	Left Hand	280501–14700	280501–12900
	Right hand	280502–14700	280502–12900
7315mm	Left Hand	280501–14700	280501–14100
	Right hand	280502–14700	280502–14100

–07 Low to Side Wiper

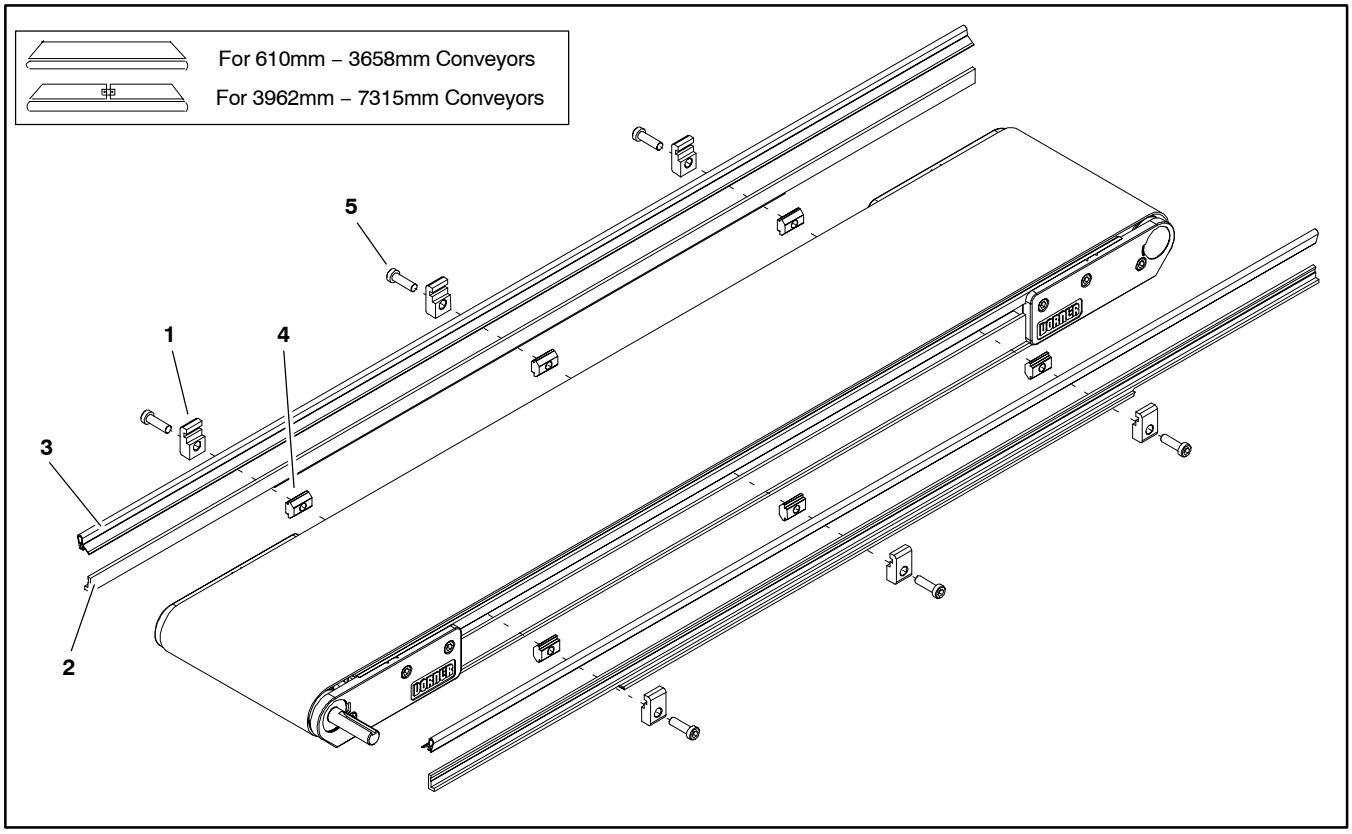

Item	Part Number	Description
1	200121	Guide Retaining Clip
2	See Chart on Next Page	2200 Guide 13mm HS
3	41–00–24	Side Wiper Nylatron (per foot)
4	639971M	Single Drop–in Tee Bar
5	920694M	Socket Head Screw M6 x 20mm

Item 2: 2200 Guide 13mm HS			
Length		End Guide	End Guide
610mm	Left Hand	280903–02400	N/A
	Right hand	280903–02400	N/A
914mm	Left Hand	280903–03600	N/A
	Right hand	280903–03600	N/A
1219mm	Left Hand	280903–04800	N/A
	Right hand	280903–04800	N/A
1524mm	Left Hand	280903–06000	N/A
	Right hand	280903–06000	N/A
1829mm	Left Hand	280903–07200	N/A
	Right hand	280903–07200	N/A
2134mm	Left Hand	280903–08400	N/A
	Right hand	280903–08400	N/A
2438mm	Left Hand	280903–09600	N/A
	Right hand	280903–09600	N/A
2743mm	Left Hand	280903–10800	N/A
	Right hand	280903–10800	N/A
3048mm	Left Hand	280903–12000	N/A
	Right hand	280903–12000	N/A
3353mm	Left Hand	280903–13200	N/A
	Right hand	280903–13200	N/A
3658mm	Left Hand	280903–14400	N/A
	Right hand	280903–14400	N/A
3962mm	Left Hand	280901–07500	280901–08100
	Right hand	280902–07500	280902–08100
4267mm	Left Hand	280901–07500	280901–09300
	Right hand	280902–07500	280902–09300
4572mm	Left Hand	280901–07500	280901–10500
	Right hand	280902–07500	280902–10500
4877mm	Left Hand	280901–07500	280901–11700
	Right hand	280902–07500	280902–11700
5182mm	Left Hand	280901–07500	280901–12900
	Right hand	280902–07500	280902–12900
5486mm	Left Hand	280901–07500	280901–14100
	Right hand	280902–07500	280902–14100
5791mm	Left Hand	280901–14700	280901–08100
	Right hand	280902–14700	280902–08100
6096mm	Left Hand	280901–14700	280901–09300
	Right hand	280902–14700	280902–09300
6401mm	Left Hand	280901–14700	280901–10500
	Right hand	280902–14700	280902–10500
6706mm	Left Hand	280901–14700	280901–11700
	Right hand	280902–14700	280902–11700
7010mm	Left Hand	280901–14700	280901–12900
	Right hand	280902–14700	280902–12900
7315mm	Left Hand	280901–14700	280901–14100
	Right hand	280902–14700	280902–14100

–09 Low to High Side

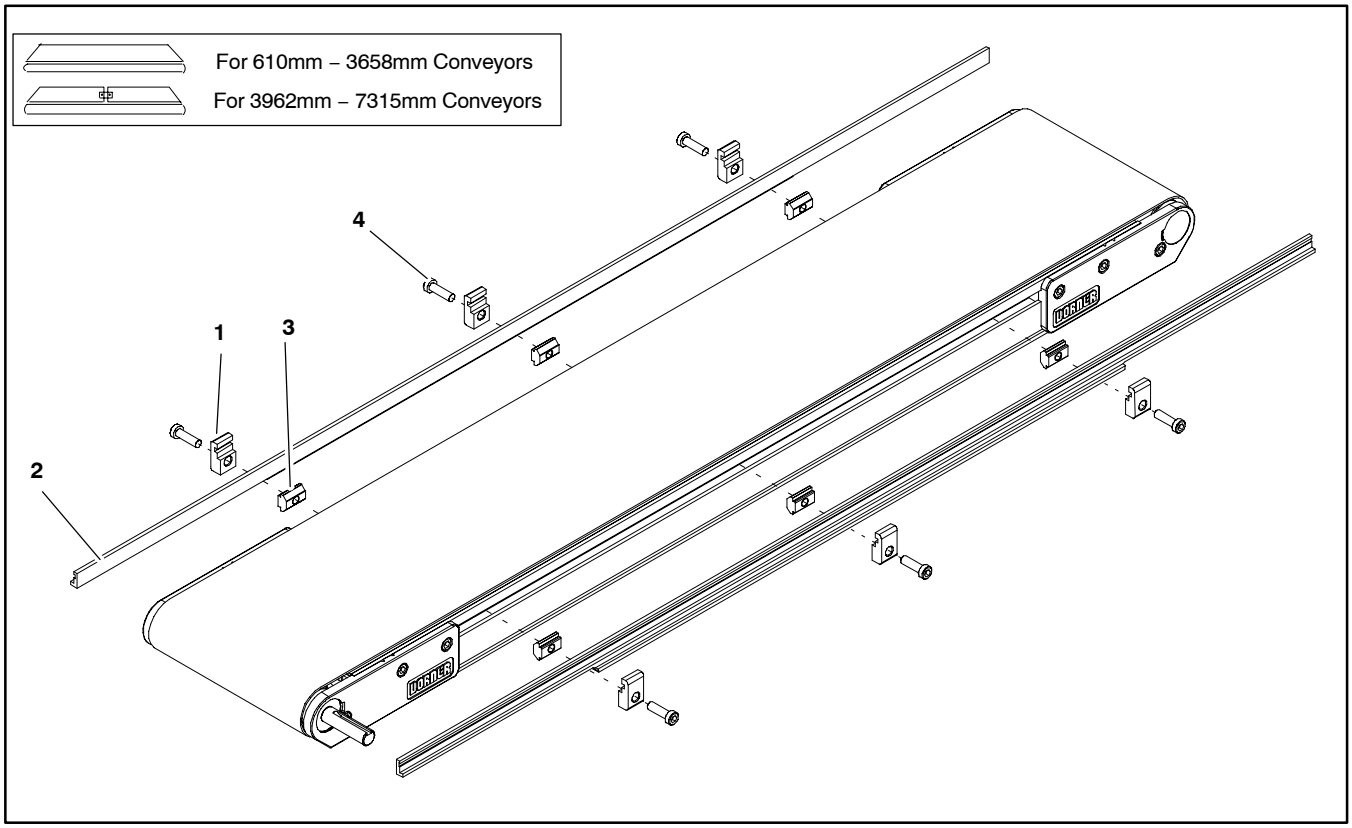

Item	Part Number	Description
1	200121	Guide Retaining Clip
2	See Chart on Next Page	2200 Guide 13mm HS
3	639971M	Single Drop–in Tee Bar
4	920694M	Socket Head Screw M6 x 20mm

Item 2: 2200 Guide 13mm HS			
Length		End Guide	End Guide
610mm	Left Hand	280903–02400	N/A
	Right Hand	280903–02400	N/A
914mm	Left Hand	280903–03600	N/A
	Right Hand	280903–03600	N/A
1219mm	Left Hand	280903–04800	N/A
	Right Hand	280903–04800	N/A
1524mm	Left Hand	280903–06000	N/A
	Right Hand	280903–06000	N/A
1829mm	Left Hand	280903–07200	N/A
	Right Hand	280903–07200	N/A
2134mm	Left Hand	280903–08400	N/A
	Right Hand	280903–08400	N/A
2438mm	Left Hand	280903–09600	N/A
	Right Hand	280903–09600	N/A
2743mm	Left Hand	280903–10800	N/A
	Right Hand	280903–10800	N/A
3048mm	Left Hand	280903–12000	N/A
	Right Hand	280903–12000	N/A
3353mm	Left Hand	280903–13200	N/A
	Right Hand	280903–13200	N/A
3658mm	Left Hand	280903–14400	N/A
	Right Hand	280903–14400	N/A
3962mm	Left Hand	280901–07500	280901–08100
	Right Hand	280902–07500	280902–08100
4267mm	Left Hand	280901–07500	280901–09300
	Right Hand	280902–07500	280902–09300
4572mm	Left hand	280901–07500	280901–10500
	Right Hand	280902–07500	280902–10500
4877mm	Left Hand	280901–07500	280901–11700
	Right Hand	280902–07500	280902–11700
5182mm	Left Hand	280901–07500	280901–12900
	Right Hand	280902–07500	280902–12900
5486mm	Left Hand	280901–07500	280901–14100
	Right Hand	280902–07500	280902–14100
5791mm	Left Hand	280901–14700	280901–08100
	Right hand	280902–14700	280902–08100
6096mm	Left Hand	280901–14700	280901–09300
	Right hand	280902–14700	280902–09300
6401mm	Left Hand	280901–14700	280901–10500
	Right hand	280902–14700	280902–10500
6706mm	Left Hand	280901–14700	280901–11700
	Right hand	280902–14700	280902–11700
7010mm	Left Hand	280901–14700	280901–12900
	Right hand	280902–14700	280902–12900
7315mm	Left Hand	280901–14700	280901–14100
	Right hand	280902–14700	280902–14100

–10 13mm Extruded Plastic

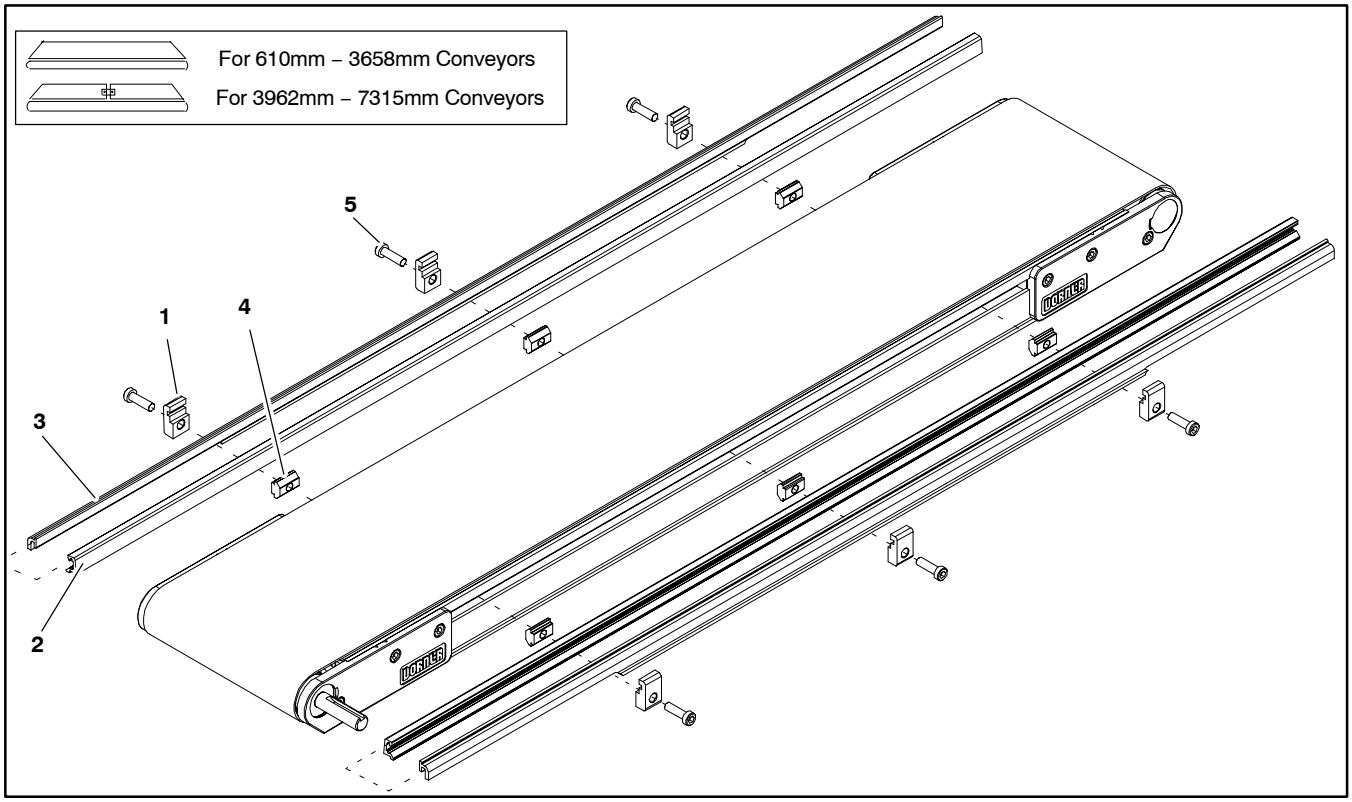

Item	Part Number	Description
1	200121	Guide Retaining Clip
2	200054P	Snap–On Guide (per foot)
3	See Chart on Next Page	2200 Guide
4	639971M	Single Drop–in Tee Bar
5	920694M	Socket Head Screw M6 x 20mm

Item 2: 2200 Guide			
Length		End Guide	End
610mm	Left Hand	281003–02400	N/A
	Right hand	281003–02400	N/A
914mm	Left Hand	281003–03600	N/A
	Right hand	281003–03600	N/A
1219mm	Left Hand	281003–04800	N/A
	Right hand	281003–04800	N/A
1524mm	Left Hand	281003–06000	N/A
	Right hand	281003–06000	N/A
1829mm	Left Hand	281003–07200	N/A
	Right hand	281003–07200	N/A
2134mm	Left Hand	281003–08400	N/A
	Right hand	281003–08400	N/A
2438mm	Left Hand	281003–09600	N/A
	Right hand	281003–09600	N/A
2743mm	Left Hand	281003–10800	N/A
	Right hand	281003–10800	N/A
3048mm	Left Hand	281003–12000	N/A
	Right hand	281003–12000	N/A
3353mm	Left Hand	281003–13200	N/A
	Right hand	281003–13200	N/A
3658mm	Left Hand	281003–14400	N/A
	Right hand	281003–14400	N/A
3962mm	Left Hand	281001–07500	281001–08100
	Right hand	281002–07500	281002–08100
4267mm	Left Hand	281001–07500	281001–09300
	Right hand	281002–07500	281002–09300
4572mm	Left Hand	281001–07500	281001–10500
	Right hand	281002–07500	281002–10500
4877mm	Left Hand	281001–07500	281001–11700
	Right hand	281002–07500	281002–11700
5182mm	Left Hand	281001–07500	281001–12900
	Right hand	281002–07500	281002–12900
5486mm	Left Hand	281001–07500	281001–14100
	Right hand	281002–07500	281002–14100
5791mm	Left Hand	281001–14700	281001–08100
	Right hand	281002–14700	281002–08100
6096mm	Left Hand	281001–14700	281001–09300
	Right hand	281002–14700	281002–09300
6401mm	Left Hand	281001–14700	281001–10500
	Right hand	281002–14700	281002–10500
6706mm	Left Hand	281001–14700	281001–11700
	Right hand	281002–14700	281002–11700
7010mm	Left Hand	281001–14700	281001–12900
	Right hand	281002–14700	281002–12900
7315mm	Left Hand	281001–14700	281001–14100
	Right hand	281002–14700	281002–14100

–13 Adjustable Guiding

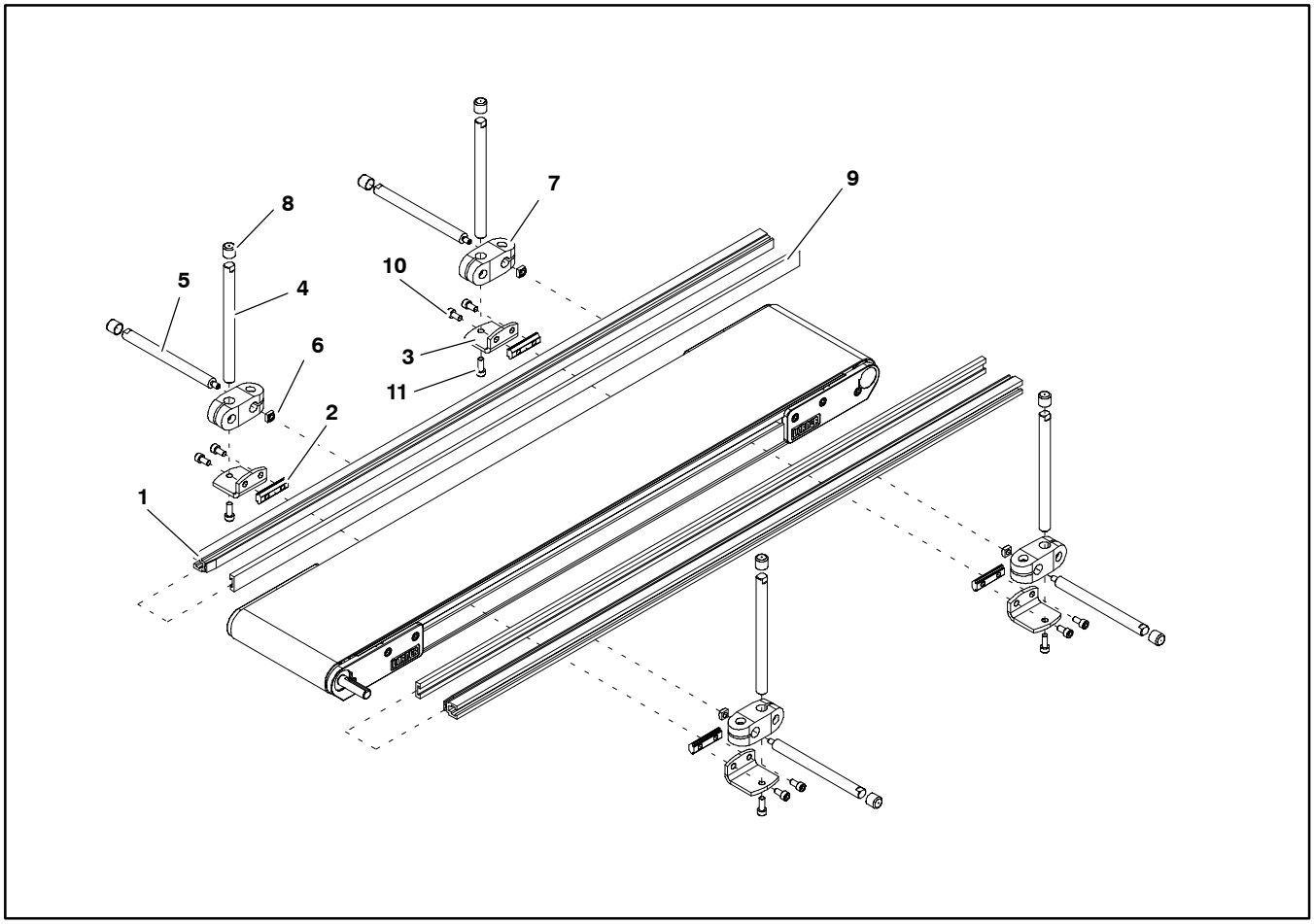

Item	Part Number	Description
1	202983	Aluminum Profile Guide 610mm
	202984	Aluminum Profile Guide 914mm
	202985	Aluminum Profile Guide 1219mm
	202986	Aluminum Profile Guide 1524mm
	202987	Aluminum Profile Guide 1829mm
	202988	Aluminum Profile Guide 2134mm
	202989	Aluminum Profile Guide 2438mm
	202990	Aluminum Profile Guide 2743mm
	202991	Aluminum Profile Guide 3048mm
	202992	Aluminum Profile Guide 3353mm
	202993	Aluminum Profile Guide 3658mm
	202994	Aluminum Profile Guide 3962mm

2	200830M	Drop–In Tee Bar
3	202004	Mounting Bracket
4	202027M	Guide Mounting Shaft Vertical
5	202028M	Guide Moutning Shaft Horizontal
6	674175MP	Square Nut
7	807–652	Cross Block
8	807–948	Vinyl Shaft Cap
9	614068P	Flat Extruded Guide (per foot)
10	920612M	Socket Head Screw M6 x 12mm
11	920616M	Socket Head Screw M6 x 16mm

Flared Side Guiding

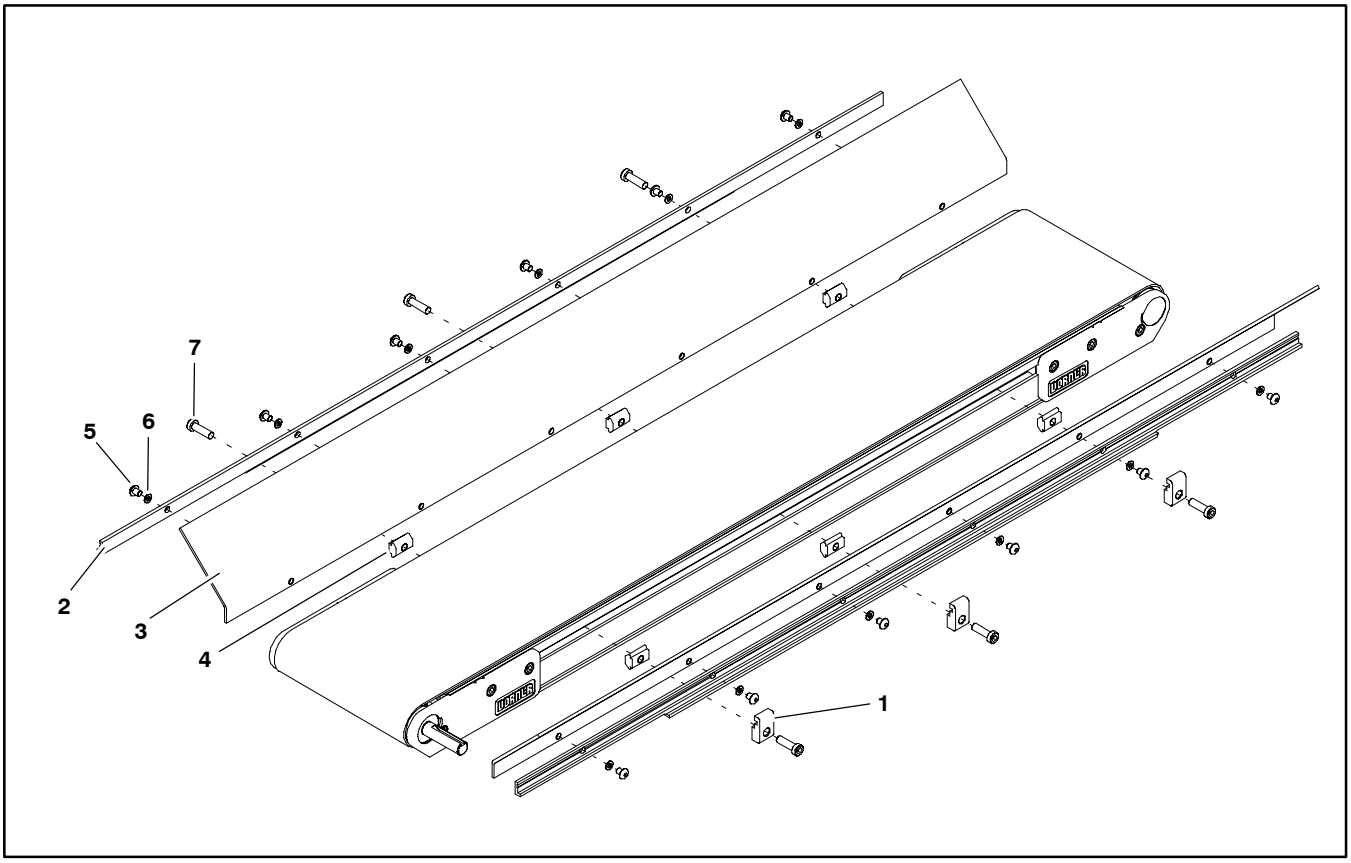

Item	Part Number	Description
1	200121	Guide Retaining Clip
2	202212	Side–Flare Mounting Guide 610mm
	202213	Side–Flare Mounting Guide 914mm
	202214	Side–Flare Mounting Guide 1219mm
	202215	Side–Flare Mounting Guide 1524mm
	202216	Side–Flare Mounting Guide 1829mm
3	202522M	Flared Guide 45° 610mm
	202523M	Flared Guide 45° 914mm
	202523M	Flared Guide 45° 1219mm
	202523M	Flared Guide 45° 1524mm
	202523M	Flared Guide 45° 1829mm
4	639971	Drop–In Tee Bar
5	910506M	Button Head Screw M5 x 6mm
6	911–512	Washer
7	920694M	Cap Low–Head Screw M6 x 20mm

Flat Belt Stand Mount Assembly

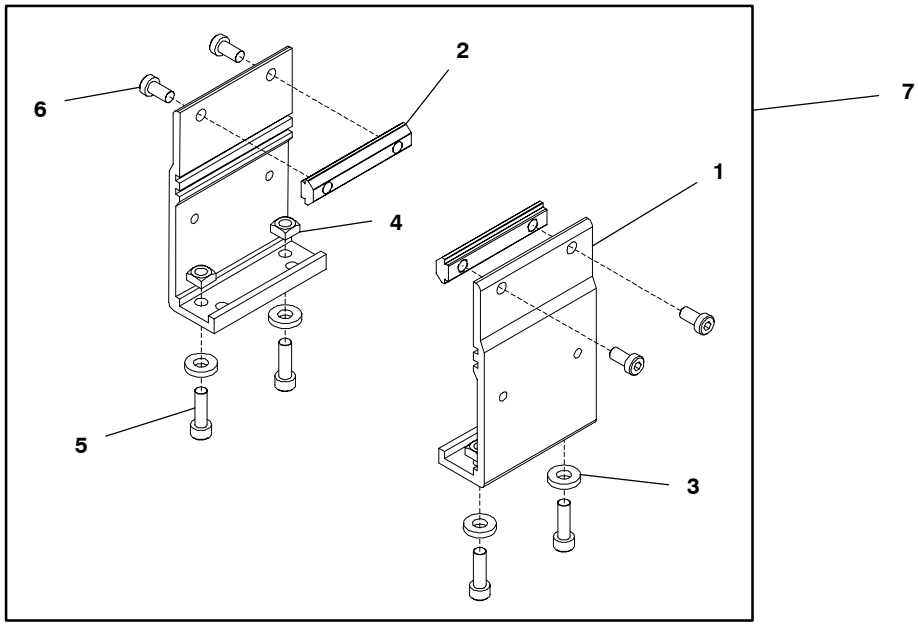

Item	Part Number	Description
1	240831	Stand Mount
2	300150M	Drop–In Tee Bar
3	605279P	Washer
4	807–920	Square Nut M6
5	920620M	Socket Head Screw M6 x 20mm
6	920692M	Socket Low Head Screw M6x12mm
7	240839	Flat Belt Stand Mount Assembly

Flat Belt Stand Mount Assembly for 610mm Conveyors

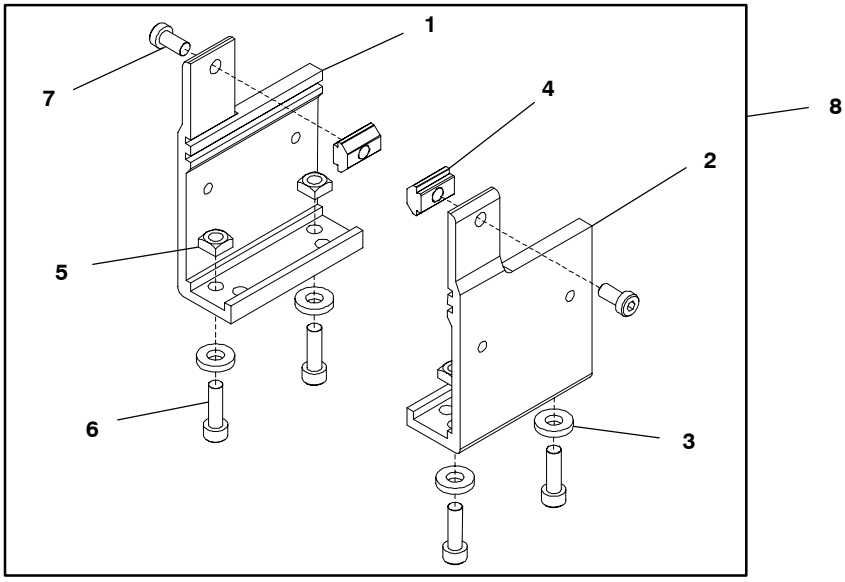

Item	Part Number	Description
1	240833	Stand Mount, LH 610mm
2	240834	Stand Mount, RH 610mm
3	605279P	Washer
4	639971M	Drop–In Tee Bar
5	807–920	Square Nut M6
6	920620M	Socket Head Screw M6 x 20mm
7	920692M	Socket Low Head Screw M6x12mm
8	240847	Flat Belt Stand Mount Assembly for 610mm Conveyors

Service Parts

Connecting Assembly without Stand Mount

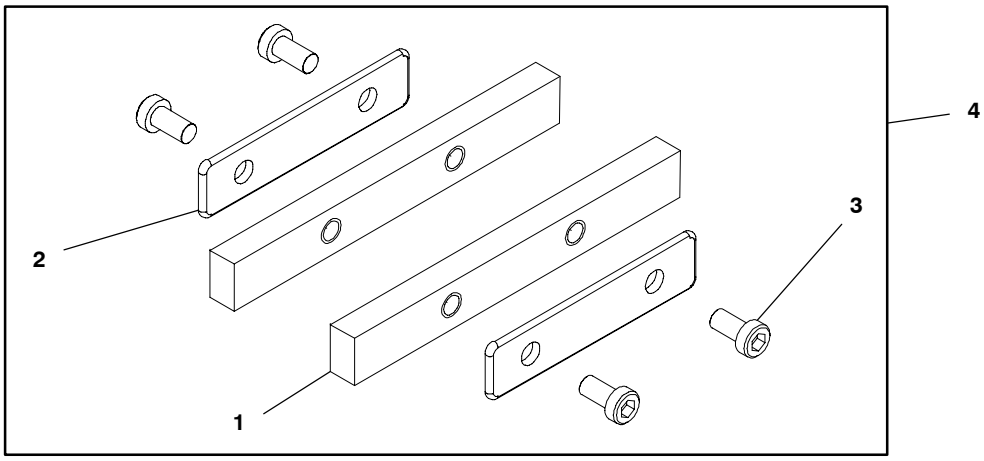

Item	Part Number	Description
1	240858	Frame Connector Bar
2	240859	Frame Connector Plate
3	920692M	Socket Low Head Screw M6x12mm
4	240861	Connecting Assembly without Stand Mounts

Flat Belt Connecting Assembly with Stand Mount

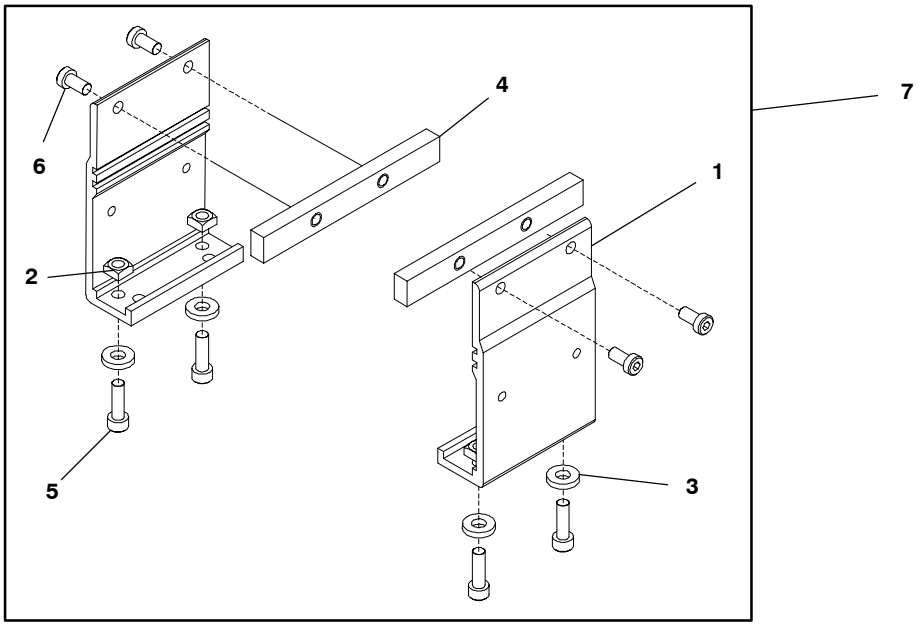

Item	Part Number	Description
1	240831	Stand Mount
2	807–920	Square Nut M6 5mm x 10mm
3	605279P	Washer
4	240858	Frame Connector Bar
5	920620M	Socket Head Screw M6 x 20mm
6	920693M	Socket Low Head Screw M6 x 16mm
7	240860	Flat Belt Connecting Assembly with Stand Mounts

51mm to 152mm Flat Belt Return Roller

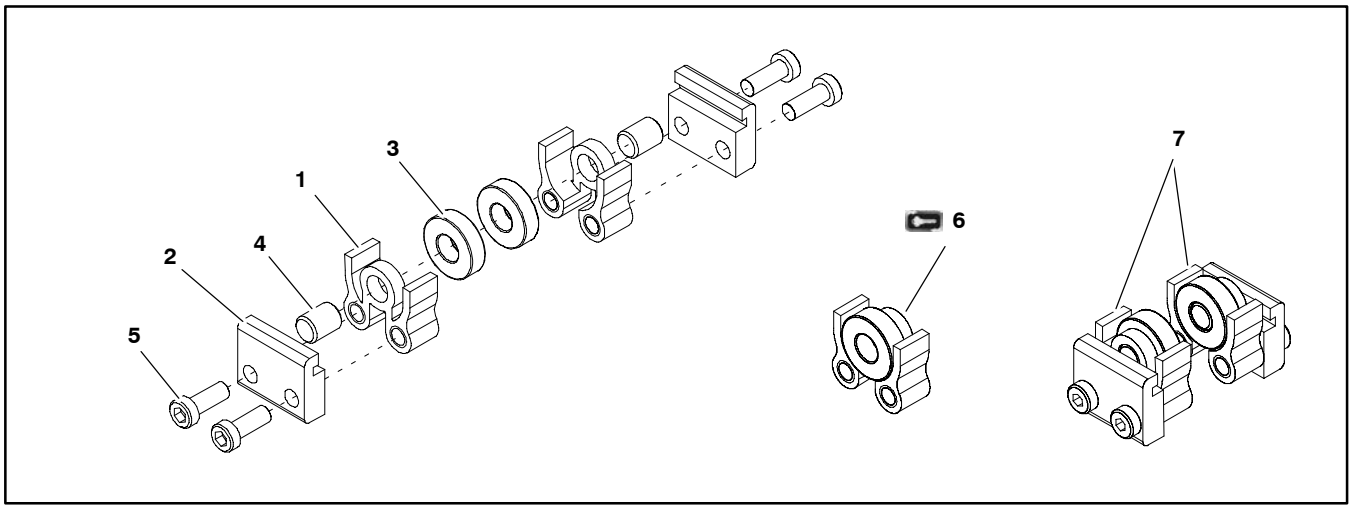

Item	Part Number	Description
1	240825	Return Roller Guard – Short
2	240827	Return Roller Clip
3	802–027	Bearing
4	913–100	Dowel Pin
5	920693M	Socket Low Head Screw M6 x 16mm
6	240840	Roller Assembly (Includes Items 1, 3 and 4)
7	240830	51mm to 152mm Flat Belt Return Roller Assy

203mm to 610mm Flat Belt Return Roller

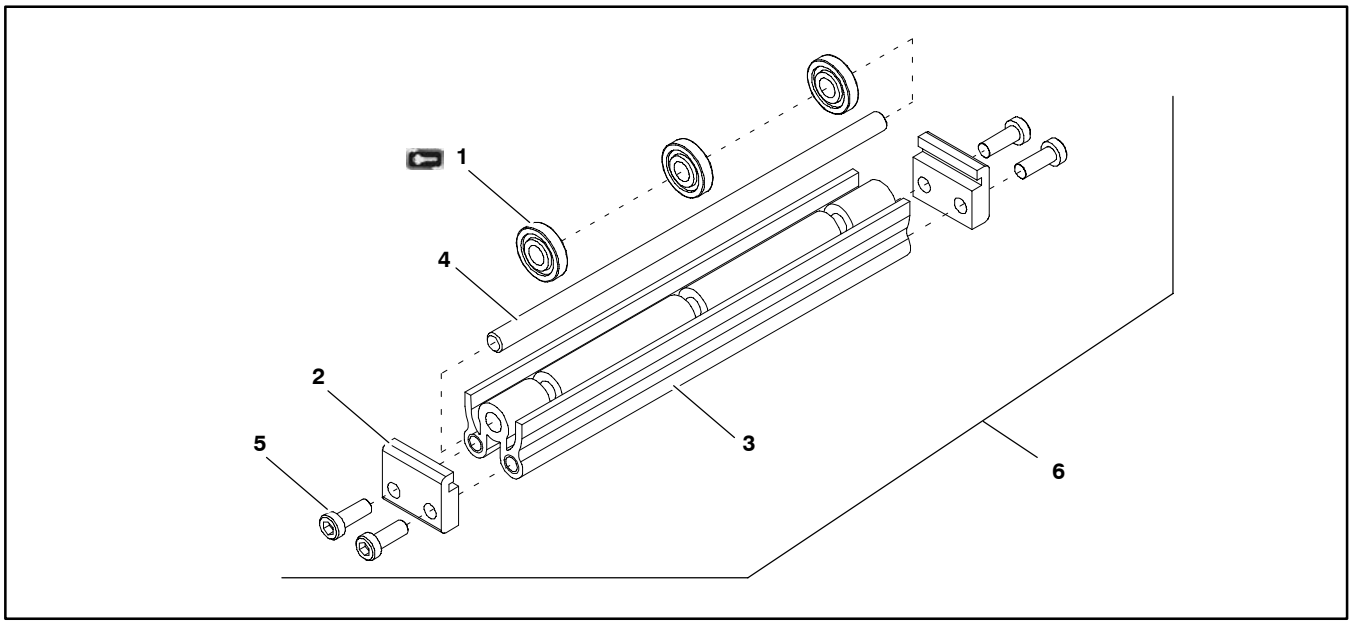

Item	Part Number	Description
1	240826	Return Roller
2	240827	Return Roller Clip
3	2409WW	Return Roller Guard
4	2410WW	Return Roller Rod
5	920693M	Socket Low Head Screw M6 x 16mm
6	2408WW	203mm to 610mm Flat Belt Return Roller Assembly
WW= Conveyor width ref.: 02, 03, 04, 05, 06, 08, 10, 12, 18, 21, 24		

Conveyor Belt Part Number Configuration

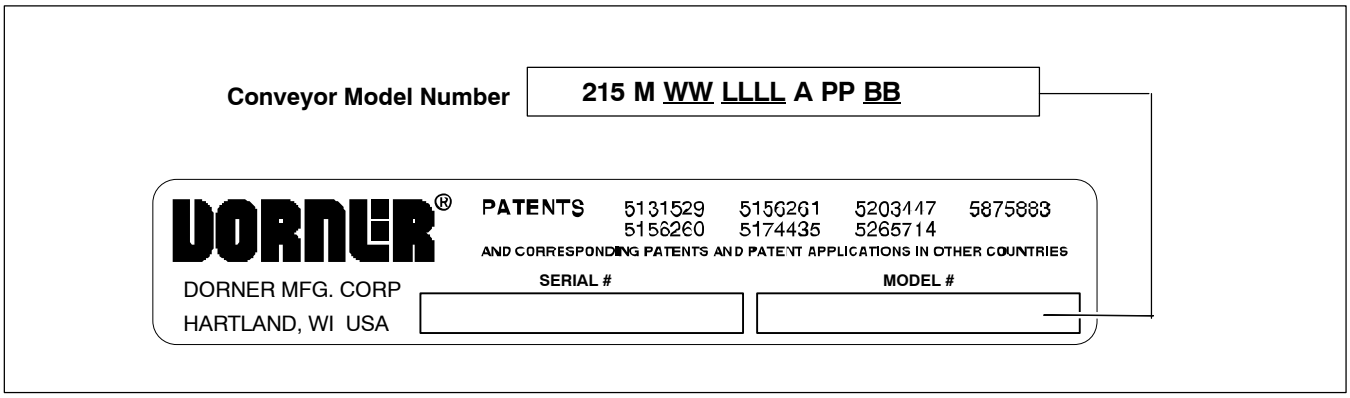

Figure 55

Refer to Dorner patent plate (Figure 55). From the model number, determine conveyor width ("WW"), length ("LLLL") and belt type ("BB"). Use data to configure belt part number as indicated below. *Add "V" for V-guided belts.

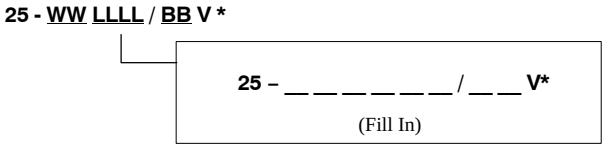

Notes

Return Policy

No returns will be accepted without prior written factory authorization. When calling for authorization, please have the following information ready for the Dorner Factory representative or your local distributor:

1. Name and address of customer.
2. Item(s) being returned.
3. Reason for return.
4. Customer's original order number used when ordering the item(s).
5. Dorner or distributor invoice number.

A representative will discuss action to be taken on the Returned items and provide a Returned Goods Authorization Number to reference.

There will be a 15% restocking charge on all new items returned for credit where Dorner was not at fault. These will not be accepted after 60 days from original invoice date. The restocking charge covers inspection, cleaning, disassembly, and reissuing to inventory.

If a replacement is needed prior to evaluation of returned item, a purchase order must be issued. Credit (if any) is issued only after return and evaluation is complete.

Dorner has representatives throughout the world. Feel free to contact Dorner for the name of your local representative. Our technical sales and service staff will gladly help with your questions on Dorner products.

For a copy of Dorner's Limited Warranty, contact factory, distributor, service center or visit our website at www.dorner.com.

For replacement parts, contact an authorized Dorner Service Center or the factory.

Dorner Mfg. Corp. reserves the right to change or discontinue products without notice. All products and services are covered in accordance with our standard warranty. All rights reserved. ©Dorner Mfg. Corp. 2000

DORNER MFG. CORP.
975 Cottonwood Drive, PO Box 20
Hartland, WI 53029-0020 USA
USA
TEL 1-800-397-8664 (USA)
FAX 1-800-369-2440 (USA)
Internet: www.dorner.com

Outside the USA:
TEL 1-262-367-7600
FAX 1-262-367-5827

851-458 Rev. G

Printed in U.S.A.