6200 Series Industrial Center Drive Conveyors

Installation, Maintenance & Parts Manual

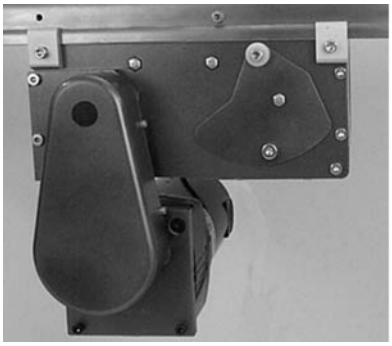

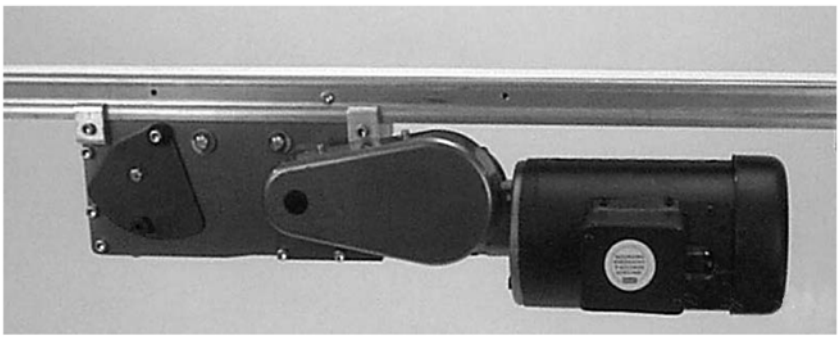

DORNER MFG. CORP.
P.O. Box 20 • 975 Cottonwood Ave.
Hartland, WI 53029-0020 USA

INSIDE THE USA
TEL: 1-800-397-8664
FAX: 1-800-369-2440

OUTSIDE THE USA
TEL: 262-367-7600
FAX: 262-367-5827

For other service manuals visit our website at:
www.dorner.com/service_manuals.asp

851-571 Rev. E

Table of Contents

Introduction 3
Warnings - General Safety 4
Product Description 5
Specifications 6
Models: 6
Conveyor Supports: 6
Installation 8
Required Tools 8
Recommended Installation Sequence (see Table of Contents for page number) 8
Conveyors Up to 12 ft (3658 mm) 8
Conveyors Longer Than 12 ft (3658 mm) 8
Mounting Brackets 9
Return Rollers 10
2¨ (51mm) Through 6¨ (152mm) Wide Conveyor 10
8¨ (203mm) Through 18¨ (457mm) Wide Conveyor . 10
Preventive Maintenance and Adjustment 11
Required Tools 11
Standard Tools 11
Special Tools 11
Checklist 11
Lubrication 11
Conveyor 11
Return Rollers 11
Maintaining Conveyor Belt 11
Troubleshooting 11
Cleaning 11
Conveyor Belt Replacement 11
Conveyor Belt Replacement Sequence (see Table of Contents for page number) 12
Belt Removal for Conveyor Without Gearmotor Mounting Package or Stands 12
Belt Removal for Conveyor With Stands and/or Gearmotor Mounting Package 13
Center Drive Module Removal 14
Belt Removal from Center Drive Module 15
Installing a New Conveyor Belt 15
Conveyor Belt Tensioning 18
Pulley Removal 18
A - Tension End Pulley Removal 18
B - Fixed End Pulley Removal 19
C - Drive Pulley Removal 19
D - Idler Pulley Removal 19
Bearing Replacement for Tension End and Fixed End Pulleys 20
Bearing Removal 20
Bearing Installation 20
Bearing Replacement for Drive Pulley 21
Bearing Removal 21
Bearing Installation 21
Bearing Replacement for Idler Pulleys 22
Pulley Installation 22
Notes 23
Service Parts 24
Fixed End Components 24
Tension End Components 25
Center Drive Module - 5” (127mm) Through 18” (457mm) Wide Conveyors 26
Center Drive Module - 2” (51mm) Through 4” (102mm) Wide Conveyors 26
Conveyor Frame and Extension 28
-02 0.5” (13mm) Bolt-On High Side Guides 29
-03 Bolt-On Side Wipers 30
-04 3” (76 mm) Bolt - On High Side Guides 31
-05 1.5” (38mm) Bolt-On High Side Guides 32
-13 Fully Adjustable UHMW Guides 33
-20 Adjustable Width UHMW Guides 34
2” (51mm) Through 6” (152mm) Wide Flat Belt Return Rollers 35
8” (203mm) Through 18” (457mm) Wide Flat Belt Return Roller 35
Conveyor Mounting Brackets 36
Configuring Conveyor Belt Part Number 36
Notes 37
Return Policy 38

IMPORTANT

Some illustrations may show guards removed. DO NOT operate equipment without guards.

Upon receipt of shipment:

- Compare shipment with packing slip. Contact factory regarding discrepancies.
- Inspect packages for shipping damage. Contact carrier regarding damage.
- Accessories may be shipped loose. See accessory instructions for installation.

Dorner's Limited Warranty applies.

Dorner 6200 Series conveyors are covered by Patent Nos. 5,174,435, 6,109,427, 6,298,981, 6,685,009 and corresponding patents and patent applications in other countries.

Dorner reserves the right to make changes at any time without notice or obligation.

Dorner has convenient, pre-configured kits of Key Service Parts for all conveyor products. These time saving kits are easy to order, designed for fast installation, and guarantee you will have what you need when you need it. Key Parts and Kits are marked in the Service Parts section of this manual with the Performance Parts Kits logo .

Warnings - General Safety

⚠ WARNING

The safety alert symbol, black triangle with white exclamation, is used to alert you to potential personal injury hazards.

⚠ DANGER

Climbing, sitting, walking or riding on conveyor will cause severe injury.

KEEP OFF CONVEYORS.

⚠ DANGER

DO NOT OPERATE CONVEYORS IN AN EXPLOSIVE ENVIRONMENT.

⚠ WARNING

Exposed moving parts can cause severe injury.

LOCK OUT POWER before removing guards or performing maintenance.

⚠ WARNING

Gearmotors may be HOT.

DO NOT TOUCH Gearmotors.

⚠ WARNING

Dorner cannot control the physical installation and application of conveyors. Taking protective measures is the responsibility of the user.

When conveyors are used in conjunction with other equipment or as part of a multiple conveyor system, CHECK FOR POTENTIAL PINCH POINTS and other mechanical hazards before system start-up.

⚠ WARNING

CRUSH HAZARD!

- **SUPPORT CONVEYOR SECTIONS PRIOR TO LOOSENING STAND HEIGHT OR ANGLE ADJUSTMENT SCREWS.**
- **Loosening stand height or angle adjustment screws may cause conveyor sections to drop down, causing serious injury.**

Refer to Figure 1 for typical conveyor components.

A	Conveyor
B	Center Drive Module
C	Gearmotor Mounting Package
D	Mounting Brackets
E	Support Stands
F	Speed Controller
G	Fixed End
H	Tension End

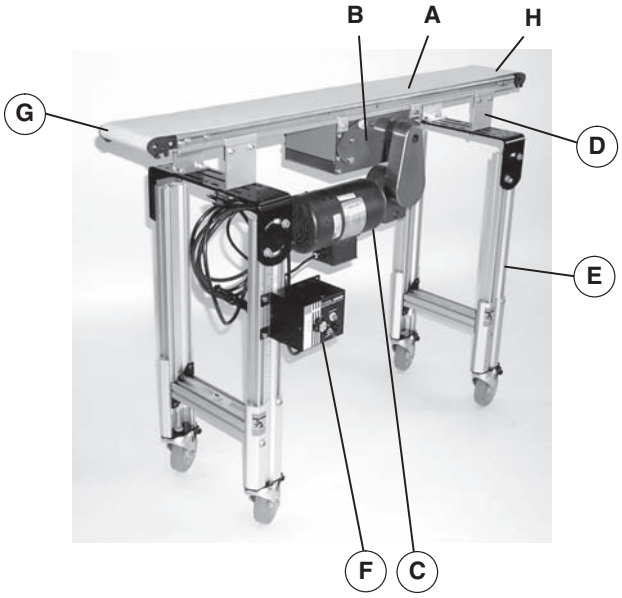

Figure 1

Specifications

Models:

6200 Series Industrial Center Drive Conveyor

6 D B M WW LLLL P GG BB

- **BB** — Belt Type*
- **GG** — Conveyor Profile*
- **P** — Output Shaft Position*
- **LLLL** — Conveyor Length Reference
- **WW** — Conveyor Width Reference
- **M** — Document Language, M = English
- **B** — 1= No wiper – with mounting bracket
  2 = No wiper – no mounting bracket
  3 = End wiper – with mounting bracket
  4 = End wiper – no mounting bracket
  5 = Dual wiper – with mounting bracket
  6 = Dual wiper – no mounting Bracket
- **D** — 5 = Center drive

* See "Ordering and Specifications" Catalog for details.

Conveyor Supports:

Maximum Distances:

I = 18¨ (457 mm)

J = 6 ft (1829 mm)**

** For conveyors longer than 12 ft (3658 mm), install support at joint.

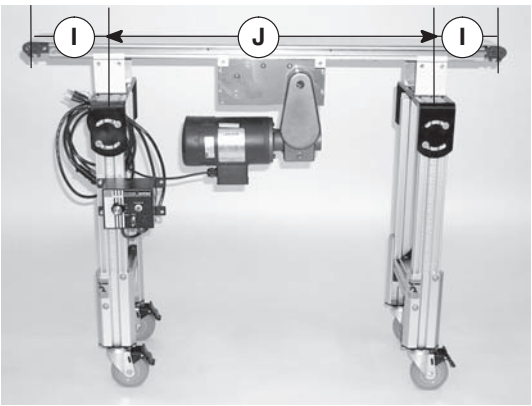

Figure 2

Specifications

Conveyor Width Reference (WW)	02	03	04	05	06	08	10	12	18
Conveyor Belt Width	1.75¨ (44 mm)	2.75¨ (70 mm)	3.75¨ (95mm)	5¨ (127 mm)	6¨ (152mm)	8¨ (203mm)	10¨ (254mm)	12¨ (305mm)	18¨ (457mm)
Maximum Conveyor Load* (See NOTE Below)	40 lb (18 kg)	50 lb (23 kg)	60 lb (27 kg)	75 lb (34 kg)	90 lb (41 kg)	40 lb (18 kg)	105 lb (47 kg)	120 lb (54 kg)	120 lb (54 kg)
Conveyor Start-up Torque*	9 in-lb (1.0 Nm)	10 in-lb (1.1 Nm)	11 in-lb (1.2 Nm)	12 in-lb (1.4 Nm)	15 in-lb (1.7 Nm)	20 in-lb (2.3 Nm)	23 in-lb (2.6 Nm)	25 in-lb (2.8 Nm)	30 in-lb (8.4Nm)
Belt Travel	3.5¨ (88 mm) per revolution of pulley								
Maximum Belt Speed*	235 feet/minute (72 meters/minute)								
Belt Take-up	1¨ (25 mm) of stroke = 2¨ (51 mm) of belt take-up								

Conveyor Length Reference (LL)	02	03	04	05	06	07	08	09	10	11	12	13 **	14 **	15 **	16 **	17 **	18 **	19 **	20 **	21 **	22 **	23 **	24 **
Conveyor Length	2-ft (610 mm)	3-ft (914 mm)	4-ft (1219 mm)	5-ft (1524 mm)	6-ft (1829 mm)	7-ft (2134 mm)	8-ft (2438 mm)	9-ft (2743 mm)	10-ft (3048 mm)	11-ft (3353 mm)	12-ft (3658 mm)	13-ft (3962 mm)**	14-ft (4267 mm)**	15-ft (4572 mm)**	16-ft (4877 mm)**	17-ft (5182 mm)**	18-ft (5486 mm)**	19-ft (5791 mm)	20-ft (6096 mm)	21-ft (6401 mm)	22-ft (6706 mm)	23-ft (7010 mm)	24-ft (7315 mm)

* See "Ordering and Specifications" Catalog for details.

** Lengths available only in 6¨ (152 mm) &wider conveyors.

NOTE

Maximum conveyor loads are based on:

- *Non-accumulating product*
- *Product moving towards gearmotor*
- *Conveyor being mounted horizontal*
- *Conveyor being located in a dry environment*
- *Conveyor with standard belt only*

NOTE

Conveyor MUST be mounted straight, flat and level within confines of conveyor. Use a level (Figure 3, item K) for set-up.

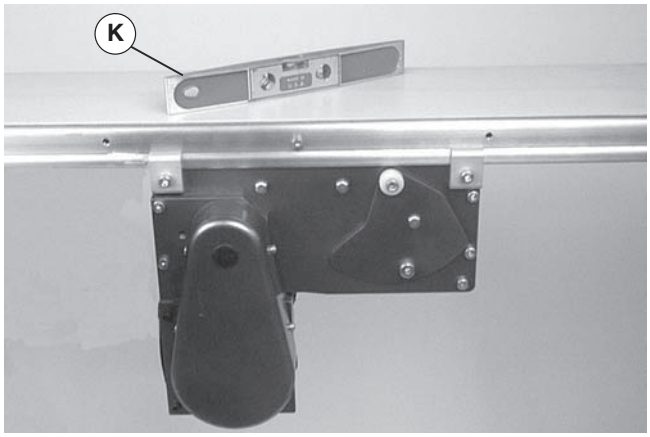

Figure 3

Required Tools

- Hex key wrenches: 4 mm, 5 mm
- 10 mm open-end wrench
- Level
- Torque wrench

Recommended Installation Sequence (see Table of Contents for page number)

- Assemble conveyor (if required)
- Attach mounting brackets (see page 8)
- Attach return roller to conveyor (see page 9)
- Assemble stands (see accessory instructions)
- Attach conveyor to stands
- Mount gearmotor mounting package (see accessory instructions)
- Attach guides/accessories (see "Service Parts" section, page 22)

Conveyors Up to 12 ft (3658 mm)

No additional assembly is required.

Conveyors Longer Than 12 ft (3658 mm)

Illustration References	
L	Conveyor frame without belt
M	M6 x 10 mm Low-Head Screws (6x) (shipped loose)
N	Connector Strips (2x) (Attached to conveyor section)
O	Conveyor frame with belt

1. Typical components (Figure 4)

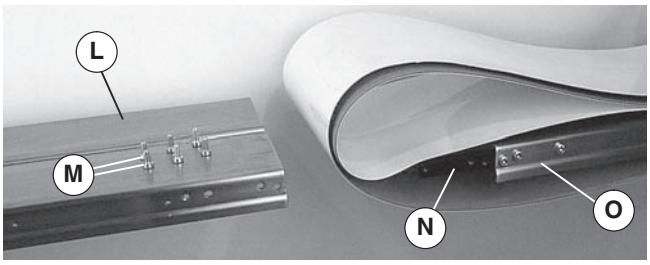

Figure 4

2. Compress tension end (Figure 5). Refer to steps 6 and 7 under the "Belt Removal for Conveyor Without Gearmotor Mounting Package or Stands" on page 11.

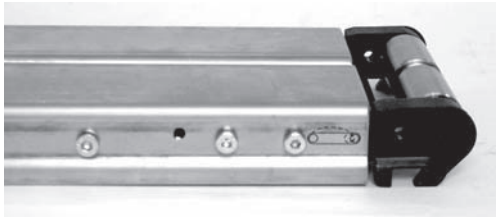

Figure 5

3. Roll out conveyor belt.
4. Place conveyor frame (Figure 6, item L) into belt loop.

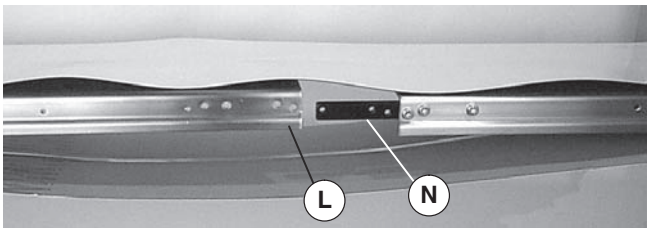

Figure 6

5. Join conveyor sections (Figure 7, item L and O). Install screws (M) through frame and into connector bar (N) on both sides. Tighten screws to 60 in-lb (7 Nm).

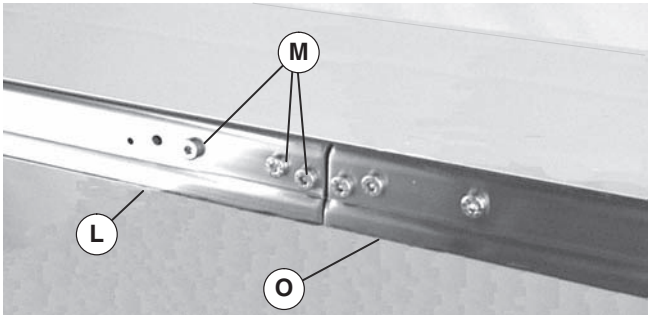

Figure 7

6. Tension conveyor belt. Refer to "Conveyor Belt Tensioning" on page 17.

Mounting Brackets

1. Typical mounting bracket components (Figure 8)

P	M6 x 12 mm Socket Head Screws (4x)
Q	M6 x 20 mm Socket Head Screw (4x)
R	Hard Washer (4x)
S	M6 Square Nut (4x)
T	Stand Mounting Bracket (2x)
U	Mounting Plate, Flat Belt (2x)

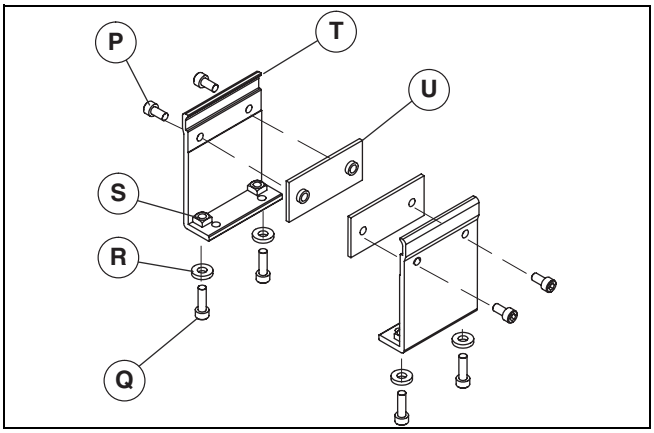

Figure 8

2. Attach clamp plate (Figure 8, item U) to stand mounting bracket (T) with two screws (P). Do not tighten screws.
3. Attach stand mounting bracket (Figure 9, item T) to bottom of conveyor (V). Snug-up screws (P).

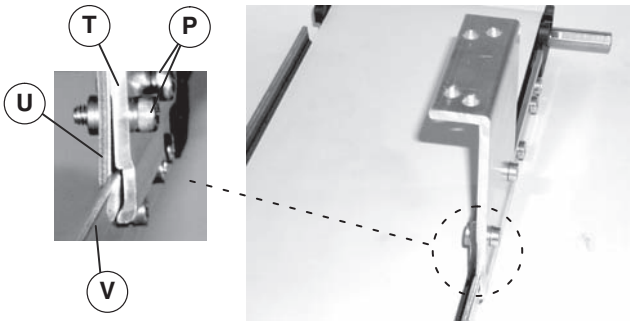

Figure 9

4. Repeat steps 2 and 3 for other stand mounting bracket(s).
5. Position conveyor (Figure 10, item V) on stands (W).

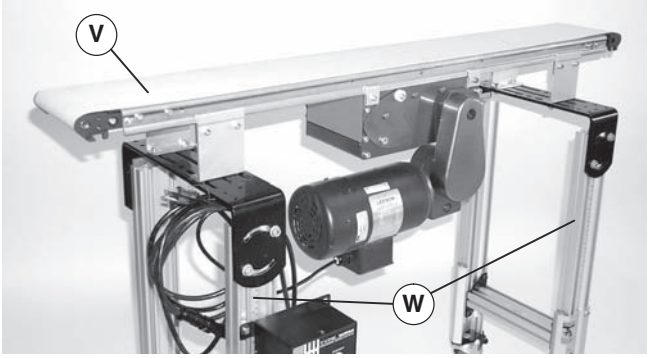

Figure 10

6. Attach stand mounting bracket (Figure 11, item T) to stand (W) with two screws (Q), hard washers (R) and square nuts (S). Tighten screws (Q) to 80 in-lb (9 Nm).

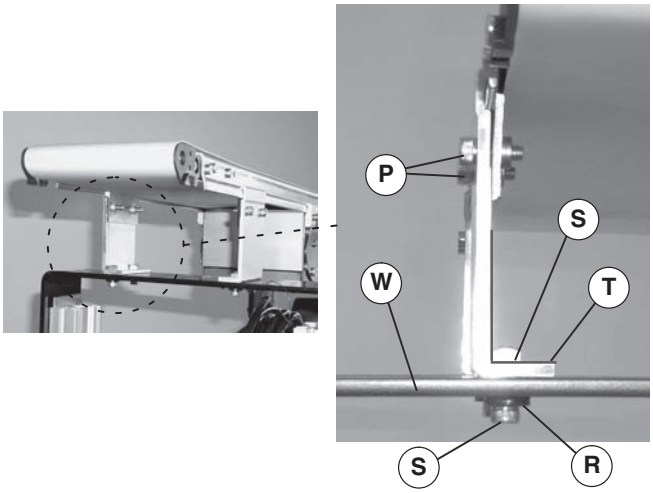

Figure 11

7. Repeat step 6 for other stand mounting bracket(s).
8. Tighten all screws (P) to 80 in-lb (9 Nm).

Return Rollers

2" (51mm) Through 6" (152mm) Wide Conveyor

1. Typical return roller components (Figure 12)

X	Return Roller Guard
Y	Return Roller Clip
Z	Low-Head Cap Screw M6-1.00 x 20mm (2)

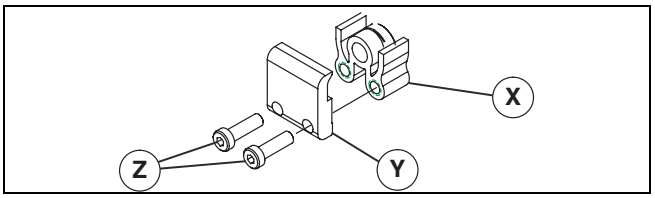

Figure 12

2. Loosely attach clip (Figure 13, item Y) on guard (X) with two screws (Z). Do not tighten screws.

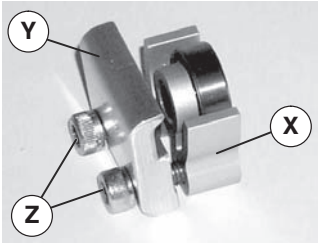

Figure 13

3. Attach return roller assembly (Figure 14, item AA) on each side of conveyor (V). Tighten screws (Z) to 80 in-lb (9 Nm).

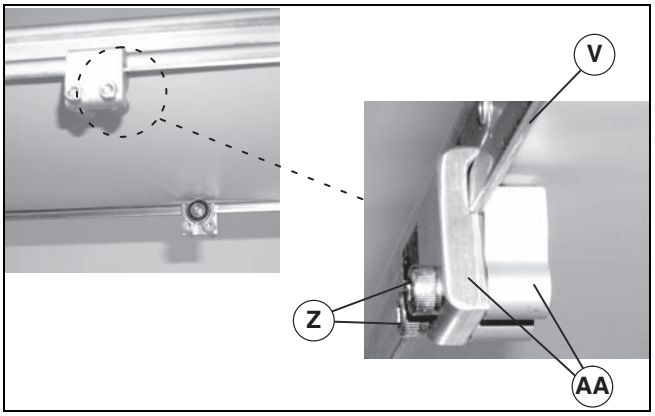

Figure 14

8" (203mm) Through 18" (457mm) Wide Conveyor

1. Typical return roller components (Figure 15)

AB	Return Roller and Guard Assembly
AC	Return Roller Clip (2x)
AD	Low-Head Cap Screw M6-1.00 x 20mm (4x)

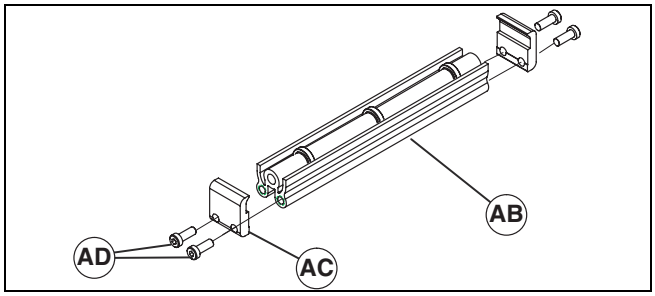

Figure 15

2. Loosely attach two clips (Figure 16, item AC) on roller and guard assembly (AB) with four screws (AD). Do not tighten screws.

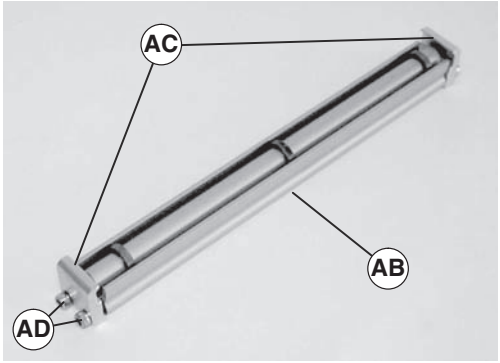

Figure 16

3. Attach return roller assembly (Figure 17, item AE) on conveyor (V). Tighten screws (Figure 16, item AD) to 80 in-lb (9 Nm).

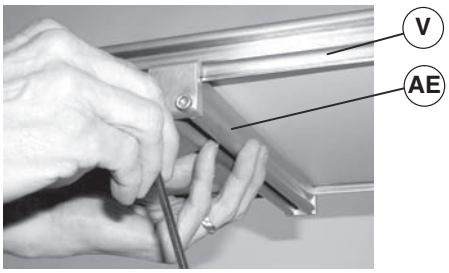

Figure 17

4. On 16-18 ft (4877-5486 mm) conveyor, repeat step 3 for other return roller.

Preventive Maintenance and Adjustment

Required Tools

Standard Tools

- Hex key wrenches:
  3 mm, 4 mm, 5 mm, 6 mm and 3/16”
- 3/8” Open-end wrench or an adjustable wrench
- Arbor press

Special Tools

- 450281 Sealed Bearing Removal Tool
- 450282 Sealed Bearing Installation Tool

Checklist

- Keep service parts on hand (see “Service Parts” section for recommendations)
- Keep supply of belt cleaner (part # 625619)
- Clean entire conveyor and knurled pulley while disassembled
- Replace worn or damaged parts

Lubrication

Conveyor

No lubrication is required. Replace bearings if worn.

Return Rollers

No lubrication is required. Replace bearings if worn.

Maintaining Conveyor Belt

Troubleshooting

Inspect conveyor belt for:

- Surface cuts or wear
- Stalling or slipping
- Damage to V-guide

Surface cuts and wear indicate:

- Sharp or heavy parts impacting belt
- Jammed parts
- Improperly installed bottom wiper(s)
- Accumulated dirt in wiper(s)
- Foreign material inside the conveyor
- Improperly positioned accessories
- Bolt-on guiding is pinching belt

Stalling or slipping indicates:

- Excessive load on belt
- Conveyor belt or drive timing belt are not properly tensioned
- Worn knurl or impacted dirt on drive pulley
- Intermittent jamming or drive train problems

Damage to V-guide indicates:

- Twisted or damaged conveyor frame
- Dirt impacted on pulleys
- Excessive or improper side loading

Cleaning

IMPORTANT

Do not use belt cleaners that contain alcohol, acetone, Methyl Ethyl Ketone (MEK) or other harsh chemicals.

Use Dorner Belt Cleaner (part # 625619). Mild soap and water may also be used. Do not soak the belt.

For /05 woven polyester and /06 black anti-static belts, use a bristled brush to improve cleaning.

Conveyor Belt Replacement

⚠ WARNING

Exposed moving parts can cause severe injury.

LOCK OUT POWER before removing guards or performing maintenance.

Conveyor Belt Replacement Sequence (see Table of Contents for page number)

- Remove old conveyor belt:
  - Conveyor without Gearmotor Mounting Package or Stands
  - Conveyor with Stands and/or Gearmotor Mounting Package
- Center Drive Module Removal
- Conveyor Belt Removal from Center Drive Module
- Install New Conveyor Belt
- Tension Conveyor Belt

Belt Removal for Conveyor Without Gearmotor Mounting Package or Stands

1. If installed, loosen two set screws (Figure 18, item AF) to remove and retain bottom wiper(s) (AG).

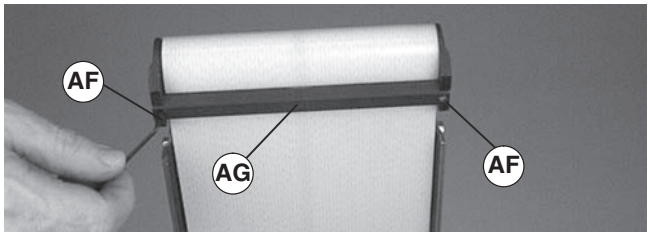

Figure 18

2. If conveyor is equipped with guiding and accessories and/or return rollers, remove them from one side.
3. Loosen screw (Figure 19, item AI) & (Figure 20, item AI) on each side of center drive module (AJ).

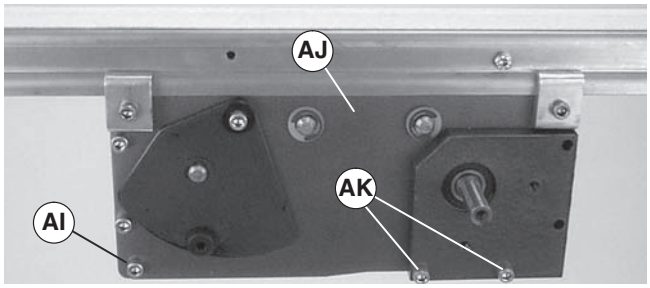

Figure 19

4. Remove screws (Figure 19, item AK) & (Figure 20, item AK) on each side of center drive module (AJ).
5. Using finger grip holes (Figure 20, item AL), open tension door (AM) to release conveyor belt tension.

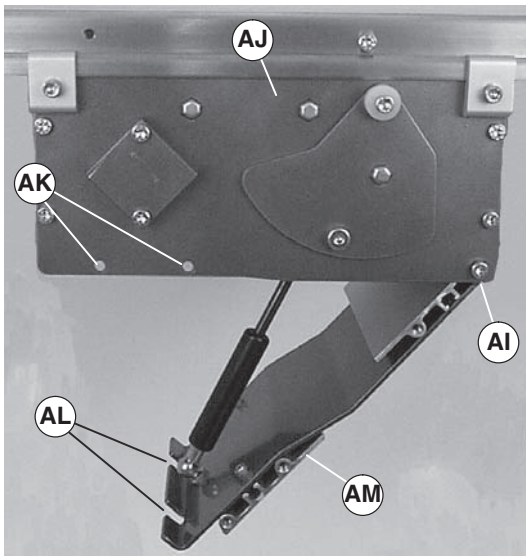

Figure 20

6. On tension end of the conveyor identified with a 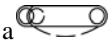 label (Figure 21, item AN) and (Figure 22, item AN), loosen two M6 socket head cap screws (AO) on each side of conveyor.

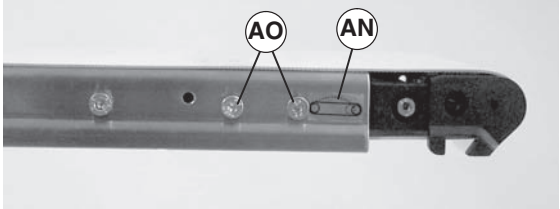

Figure 21

7. Retract idler spindle assembly (Figure 22, item AP) by pushing in on it or by turning M6 pinion screw (Figure 22, item AQ) and (Figure 23, item AQ) clockwise.

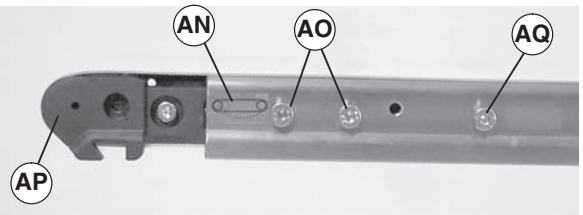

Figure 22

NOTE

On 4-foot (1219 mm) and shorter by 8¨ (203 mm) and wider conveyors, the center drive module and the conveyor belt must be removed at the same time. See "Center Drive Module Removal" on page 14.

8. Remove conveyor belt (Figure 23, item AR) from both ends of conveyor.

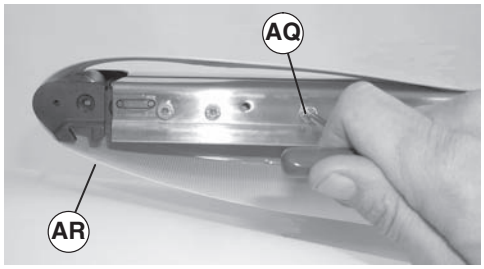

Figure 23

9. Proceed to "Center Drive Module Removal" on page 14.

Belt Removal for Conveyor With Stands and/or Gearmotor Mounting Package

1. If installed, loosen two set screws (Figure 18, item AF) to remove and retain bottom wiper(s) (AG).
2. If conveyor is equipped with guiding and accessories and/or return rollers, remove them from one side.

NOTE

Figure 24 & Figure 25 show a vertical mount in the A1 position with a parallel shaft gearmotor. Horizontal mount, D1 position and/or 90° gearmotor mounting is similar.

3. Remove four (4) screws (Figure 24, item AS) and remove cover (AT).

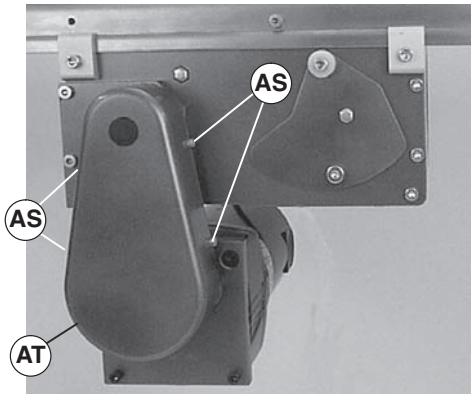

Figure 24

4. Loosen tensioner (Figure 25, item AU) to release tension on timing belt (AV).

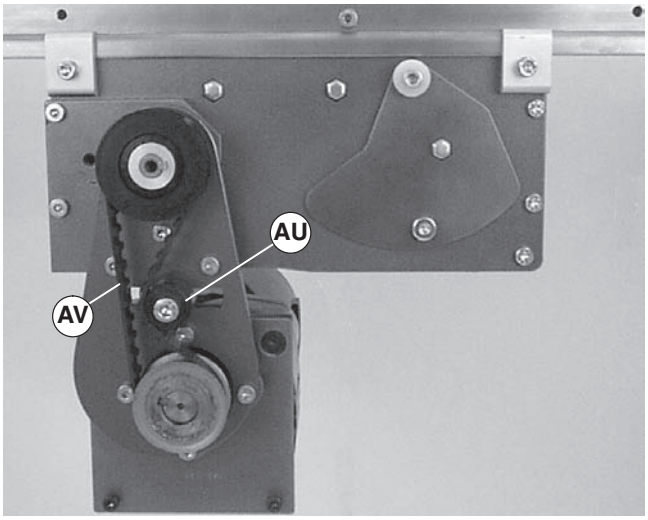

Figure 25

NOTE

If timing belt (AV) does not slide over pulley flange, loosen driven pulley set screws (Figure 26, item AW) and remove pulley (AX) with belt.

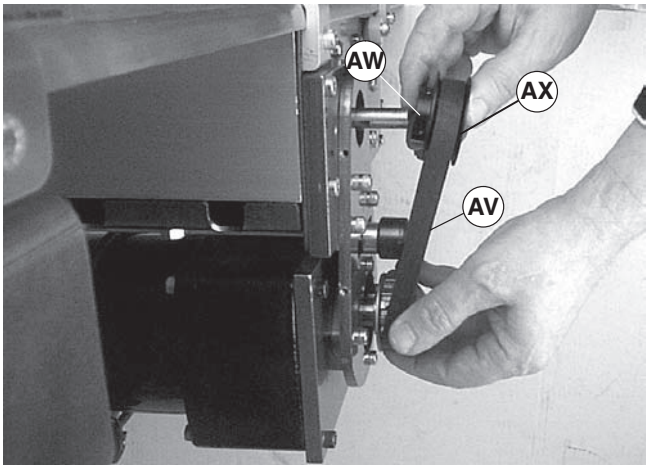

Figure 26

5. Remove timing belt (Figure 25, item AV).

6. Remove three (3) screws (Figure 27, item AY) and remove gearmotor mounting package.

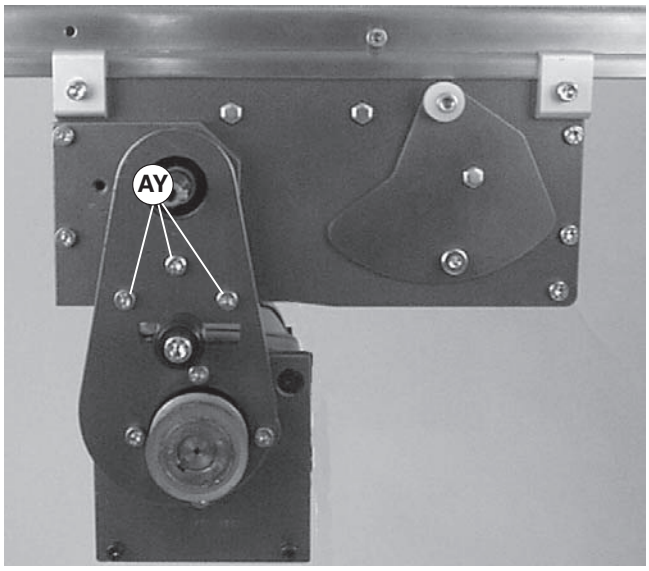

Figure 27

7. Loosen screw (Figure 19, item AI) & (Figure 20, item AI) on each side of center drive module (AJ).

NOTE

With a vertical mount, two (2) screws (Figure 27, item AY) were removed in step 6.

8. Remove screws (Figure 19, item AK) & (Figure 20, item AK) on each side of center drive module (AJ).
9. Using finger grip holes (Figure 20, item AL), open tension door (AM) to release conveyor belt tension.
10. On tension end of the conveyor identified with a label (Figure 21, item AN) and (Figure 22, item AN), loosen two M6 socket head cap screws (AO) on each side of conveyor.
11. Retract idler spindle assembly (Figure 22, item AP) by pushing in on it or by turning M6 pinion screw (Figure 22, item AQ) and (Figure 23, item AQ) clockwise.

⚠ WARNING

To prevent injury from the support stand tipping-over when conveyor is uncoupled, anchor stand to floor or otherwise stabilize the stand.

NOTE

On 4-foot (1219 mm) and shorter by 8¨ (203 mm) and wider conveyors, the center drive module and the conveyor belt must be removed at the same time. See "Center Drive Module Removal" on page 14.

12. Loosen two mounting plate screws (Figure 28, item P). Remove two screws, hard washers and square nuts (AZ). Slide stand mounting bracket (T) off stand (W) and remove from conveyor (V).

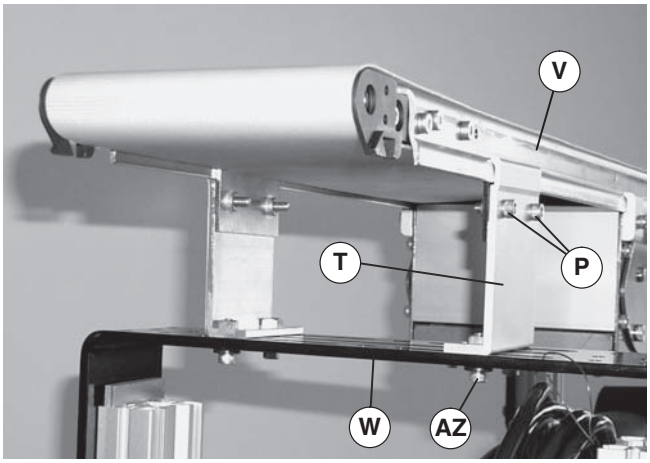

Figure 28

13. Repeat step 12 for remaining stand mounting brackets on same side of conveyor between conveyor tail and center drive module.
14. Remove conveyor belt (Figure 29, item AR) from conveyor end.

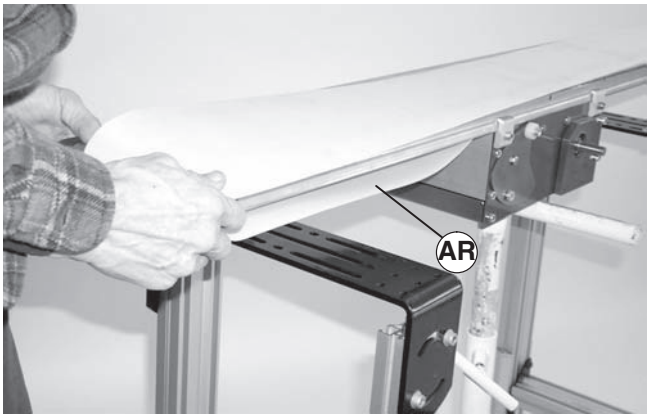

Figure 29

15. After belt is removed, secure conveyor with mounting plate(s) and stand mounting bracket(s) (Figure 28, item T) and mounting hardware (AZ).
16. Repeat steps 12 through 15 for other end of conveyor.
17. Proceed to "Center Drive Module Removal".

Center Drive Module Removal

⚠ WARNING

Before loosening clamps (Figure 30, item BA), provide a support (BB) under center drive module.

NOTE

If desired, mark center drive module location on conveyor.

1. Loosen clamp screw (Figure 30, item BA) in each corner of module.

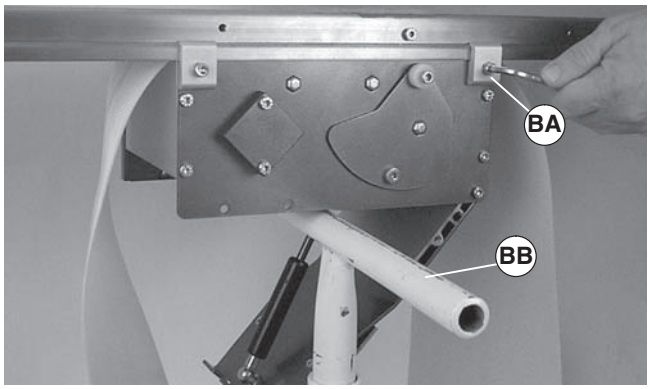

Figure 30

2. Remove module.

Belt Removal from Center Drive Module

1. Remove two (2) screws (Figure 31, item BC). Remove tension drive plate (BD).

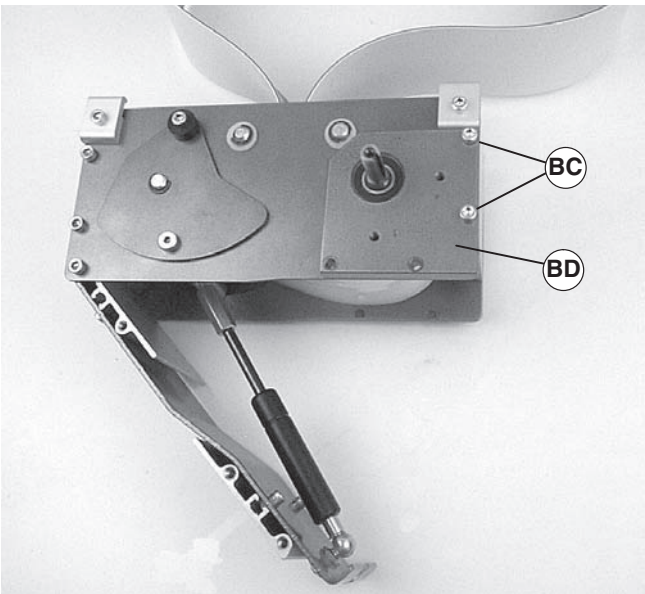

Figure 31

2. Remove drive pulley [(Figure 32, item BE), for 2¨ (44 mm), 3¨ (70 mm) or 4¨ (95 mm) wide conveyor] or [(Figure 33, item BE), for 5¨ (127 mm) or wider conveyor].

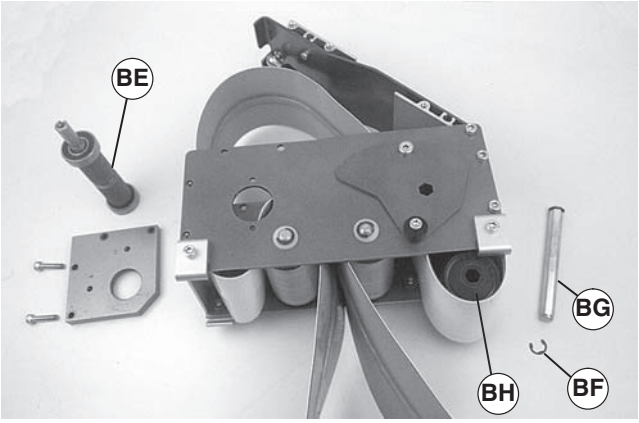

Figure 32

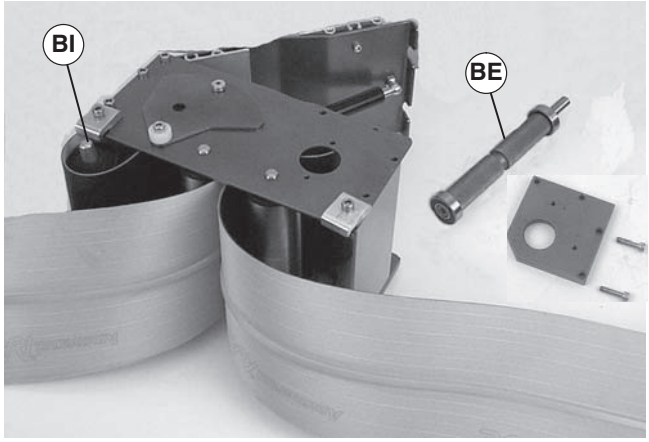

Figure 33

3. Remove grooved idler pulley:

- For 2¨ (44 mm), 3¨ (70 mm) or 4¨ (95 mm) wide conveyor, remove E-ring clip (Figure 32, item BF). Remove pulley shaft (BG) and remove pulley (BH).
- For 5¨ (127 mm) or wider conveyor, depress both sides of spring-loaded shaft and remove pulley (Figure 33, item BI).

4. Remove conveyor belt.

Installing a New Conveyor Belt

IMPORTANT

Belt travel direction is identified by an arrow decal on the side of the conveyor (Figure 34, item BJ) & (Figure 35, item BJ).

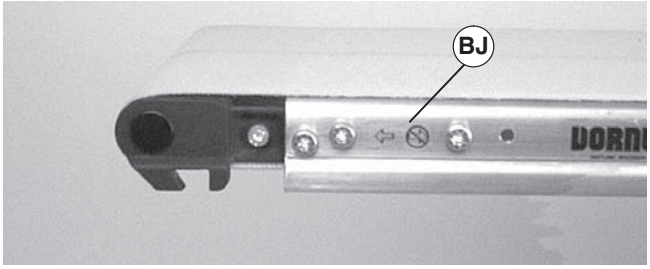

Figure 34

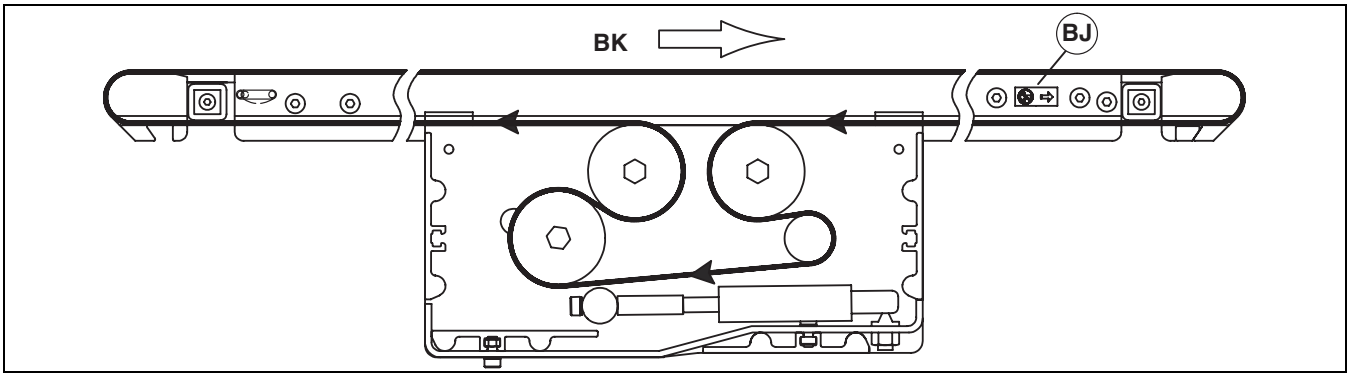

Figure 35

1. Orient the conveyor belt so that the splice leading fingers (Figure 36, item BL) point in the direction of belt travel (BK) as identified by the label (Figure 34, item BJ) and (Figure 35, item BJ).

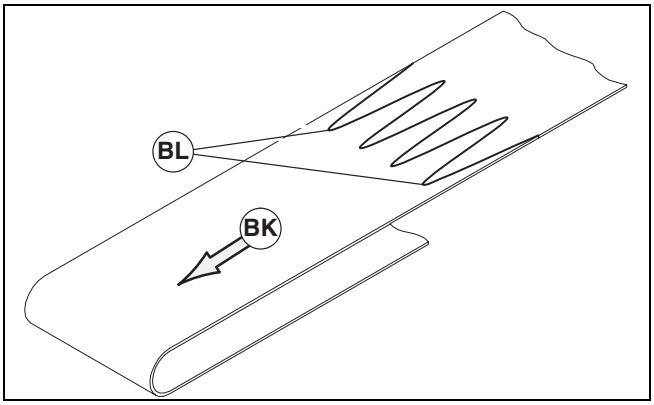

Figure 36

2. Place loop of belt into module (Figure 37).

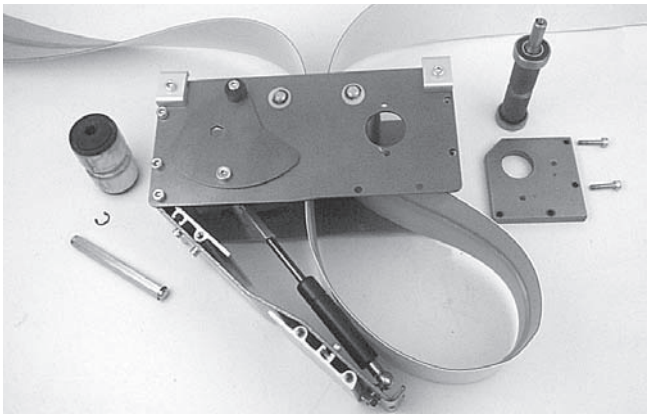

Figure 37

3. Place grooved idler pulley (Figure 32, item BH) or (Figure 33, item BI) into belt loop and replace in center drive module. Refer to step 3 under “Belt Removal from Center Drive Module” on page 14.
4. Place drive pulley (Figure 32, item BE) or (Figure 33, item BE) into belt loop and install in center drive module. Refer to “Belt Removal from Center Drive Module” section and reverse steps 1 and 2 on page 14. Tighten screws (Figure 31, item BC) to 80 in-lb (9 Nm).

NOTE

On 4-foot (1219 mm) and shorter by 8¨ (203 mm) and wider conveyors, the center drive module and the conveyor belt must be installed at the same time.

5. Install center drive module onto conveyor and secure with clamp and clamp screw (Figure 30, item BA) in each corner. Tighten screws to 80 in-lb (9 Nm).
6. Loosen two mounting plate screws (Figure 28, item P). Remove two screws, hard washers and square nuts (AZ). Slide stand mounting bracket (T) off stand (W) and remove from conveyor (V).
7. Repeat step 6 for remaining stand mounting brackets on same side of conveyor between conveyor tail and center drive module.
8. Install conveyor belt (Figure 29, item AR) on conveyor end.
9. Tighten all mounting bracket screws to 80 in-lb (9 Nm).
10. Repeat steps 6 through 9 for other end of conveyor.
11. On tension end of the conveyor identified with a label (Figure 21, item AN) and (Figure 22, item AN), loosen four M6 low head screws (AO).

NOTE

The M6 low head screw (Figure 38, item BM), which is used for extending the idler spindle assembly to tension the belt, has a yellow colored head.

12. Turn M6 low head screw (Figure 38, item BM) clockwise to extend idler spindle assembly (AP) 1¨ (25 mm) (BN).

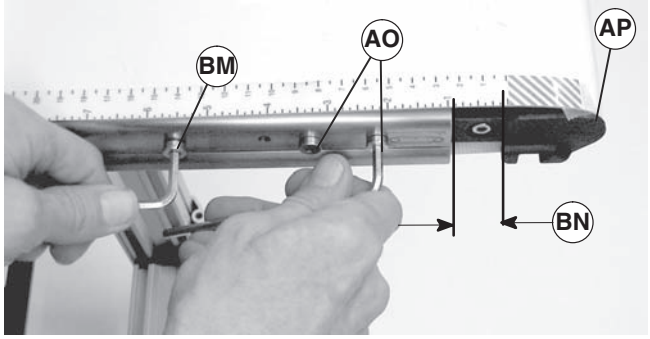

Figure 38

13. Tighten four M6 low head screws (Figure 21, item AO) and (Figure 38, item AO) to 40 in-lb (4.5 Nm) to secure idler spindle assembly (AP).

⚠ WARNING

Tension door closes quickly and may cause injury.

KEEP FINGERS CLEAR OF TENSION DOOR.

14. Close tension door (Figure 39, item AM).

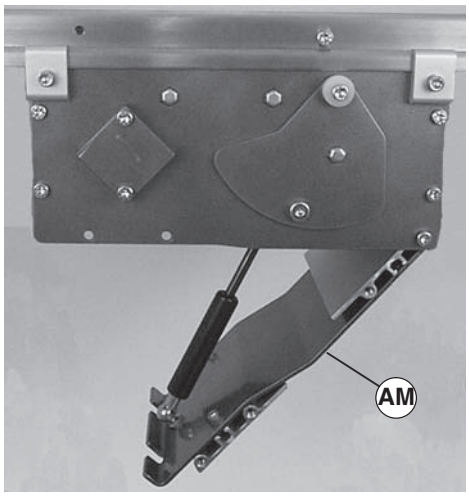

Figure 39

15. Tighten screw (Figure 40, item AI) on each side of center drive module (AJ) to 80 in-lb (9 Nm).

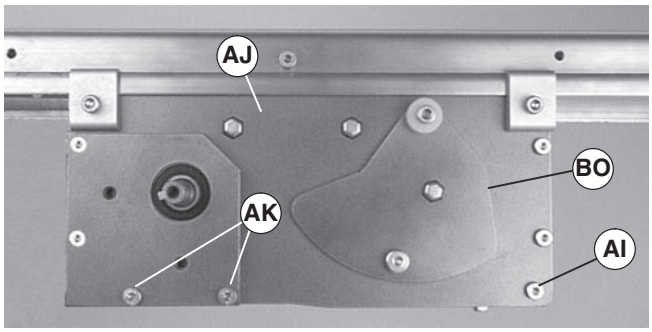

Figure 40

NOTE

If equipped with gearmotor mounting package, install by completing in reverse order steps 3 through 6 of "Belt Removal for Conveyor With Stands and/or Gearmotor Mounting Package" section on page 12.

16. Install screws (Figure 40, item AK) on each side of center drive module (AJ). Tighten screws to 80 in-lb (9 Nm).
17. If removed, install bottom wiper(s) (Figure 18, item AH). Center set screws in frame and tighten to 33 in-lb (3.7 Nm).
18. Where applicable, install return rollers, guiding and accessories.

Conveyor Belt Tensioning

NOTE

For a new belt, the tension plate will be in position (Figure 40, item BO). When tension plate extends to position (Figure 41, item BP), the conveyor belt must be replaced.

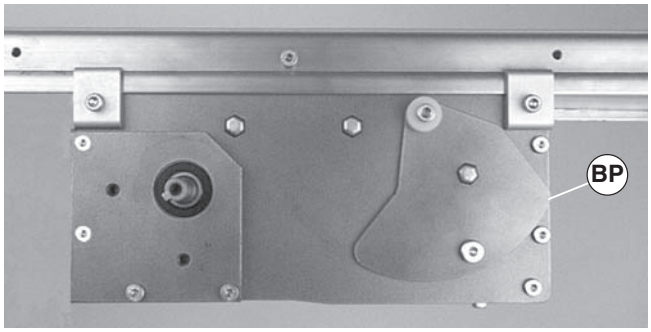

Figure 41

Conveyor is equipped with automatic tensioning cylinder. No tensioning adjustment is required.

Pulley Removal

⚠ WARNING

Exposed moving parts can cause severe injury.

LOCK OUT POWER before removing guards or performing maintenance.

Remove conveyor belt to access pulley(s).

- Refer to "Belt Removal for Conveyor Without Gearmotor Mounting Package or Stands" section, steps 1 through 8 on page 11.
- Refer to "Belt Removal for Conveyor With Stands and/or Gearmotor Mounting Package" section, steps 1 through 16 on page 12.

Remove the desired pulley following instructions:

- A - Tension End Pulley
- B - Fixed End Pulley
- C - Drive Pulley
- D - Idler Pulleys

A - Tension End Pulley Removal

1. Remove two screws (Figure 42, item AO) on each side of conveyor (V).

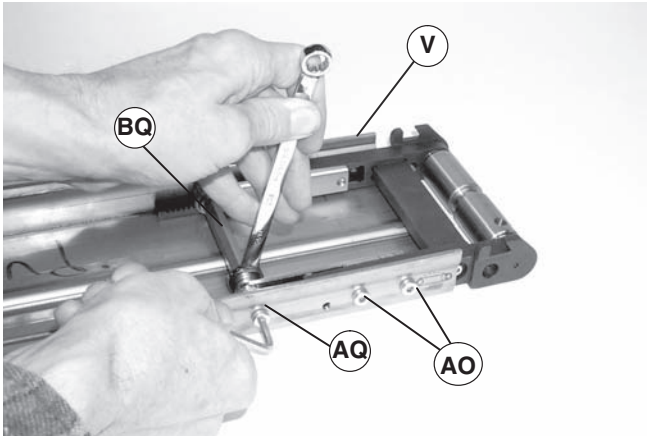

Figure 42

2. While holding hex pinion (BQ) with a 3/8" open-end wrench, loosen screw (AQ).
3. Remove screw (Figure 43, item AQ) and sleeve (BR) from conveyor (V) and hex pinion (BQ).

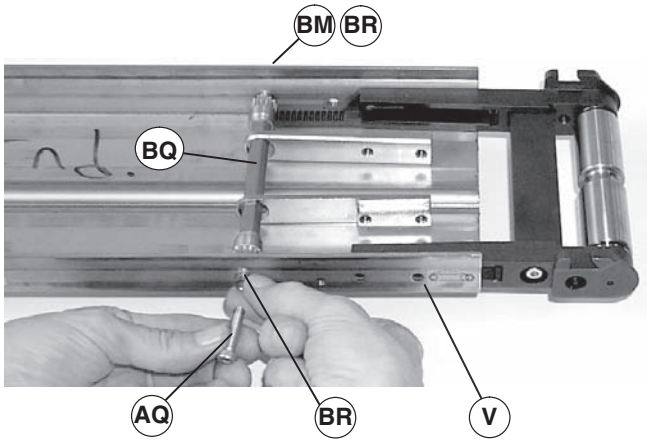

Figure 43

4. Repeat steps 2 and 3 for screw (Figure 4, item BM) and (Figure 43, item BM) on opposite of conveyor (V).

5. Remove two pinion ends (Figure 44, item BT), clamp blocks (BU), hex pinion (BQ) and tail assembly (BS) from conveyor (V).

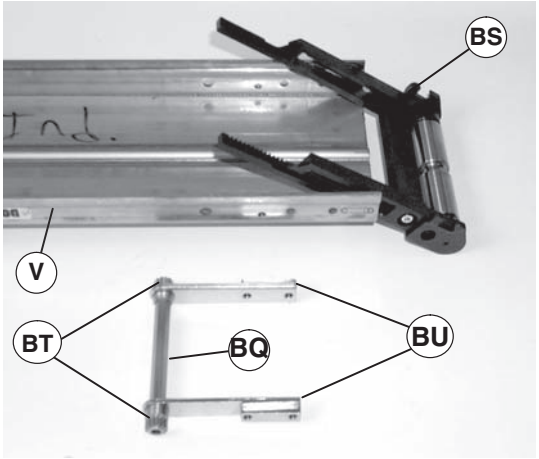

Figure 44

NOTE
Note on which side of conveyor magnet (Figure 45, item BV) is located.

6. Locate magnet (Figure 45, item BV) on spindle and bearing assembly (BW).

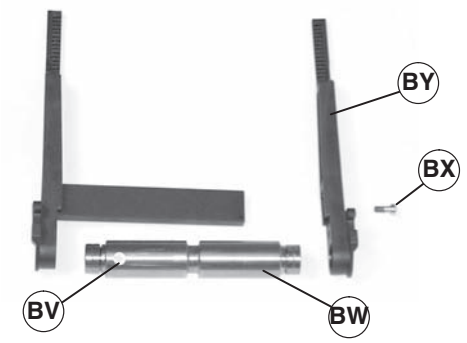

Figure 45

7. Remove screw (BX), headplate (BY), and spindle and bearing assembly (BW).

B – Fixed End Pulley Removal

1. Remove three (3) screws (Figure 46, item BZ) on both sides of conveyor.

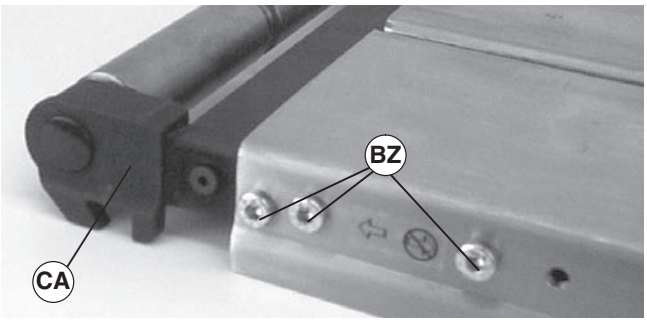

Figure 46

2. Remove fixed end tail assembly (CA).

NOTE
Note on which side of conveyor magnet (Figure 47, item CB) is located.

3. Locate magnet (Figure 47, item CB) on spindle and bearing assembly (CC).
4. Remove screw (CD) to separate head plate (CE) from spindle and bearing assembly.

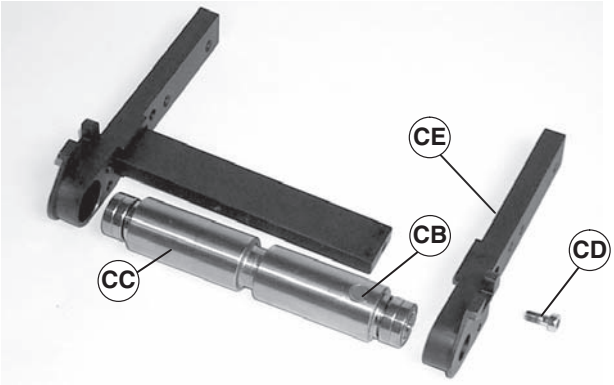

Figure 47

C – Drive Pulley Removal

1. Remove gearmotor drive package. Refer to “Belt Removal for Conveyor With Stands and/or Gearmotor Mounting Package” section, steps 3 through 9 on page 12.
2. Remove drive pulley. Refer to “Belt Removal from Center Drive Module” section, steps 1 and 2 on page 14.

D – Idler Pulley Removal

1. Remove gearmotor drive package. Refer to "Belt Removal for Conveyor With Stands and/or Gearmotor Mounting Package" section, steps 3 through 9 on page 12.
2. Detach center drive module. Refer to "Center Drive Module Removal" section on page 14.
3. Remove grooved idler pulley. Refer to "Belt Removal from Center Drive Module" section, step 3 on page 14.
4. Remove smooth idler pulleys:

- For 2¨ (44 mm), 3¨ (70 mm) or 4¨ (95 mm) wide conveyor, detach E-ring clips (Figure 48, item CF). Remove washers (CG). Remove pulley shafts (CH) and two pulleys (CI).

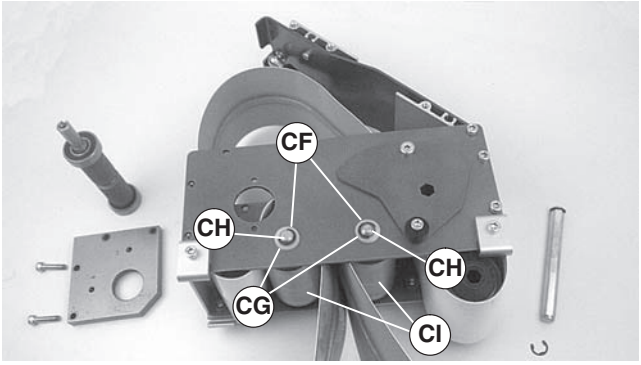

Figure 48

- For 5¨ (127 mm) or wider conveyor, depress both sides of each spring-loaded shaft (Figure 49, item CJ). Remove pulleys (CK).

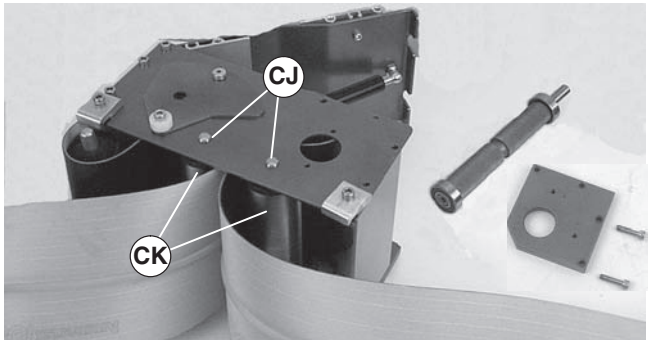

Figure 49

Bearing Replacement for Tension End and Fixed End Pulleys

IMPORTANT
Once removed, do not re-use bearings.

Bearing Removal

1. Place bearing removal tool (part # 450281) (Figure 50, item CL) over bearing (CM) with lip (CN) located in gap (CO) between bearing and spindle (CP) as shown.

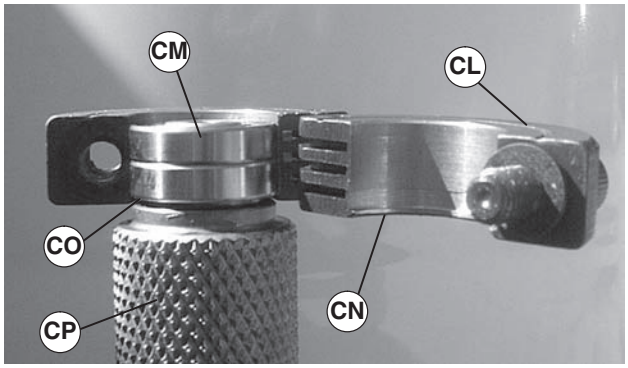

Figure 50

2. Using a 3/16¨ hex key wrench (Figure 51, item CQ), tighten bearing removal tool.

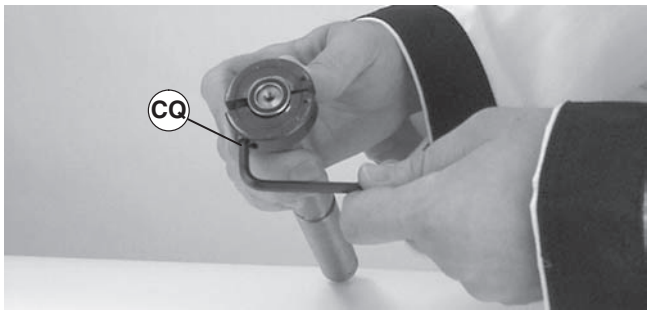

Figure 51

3. Using a puller (Figure 52, item CR), remove and discard bearing(s).

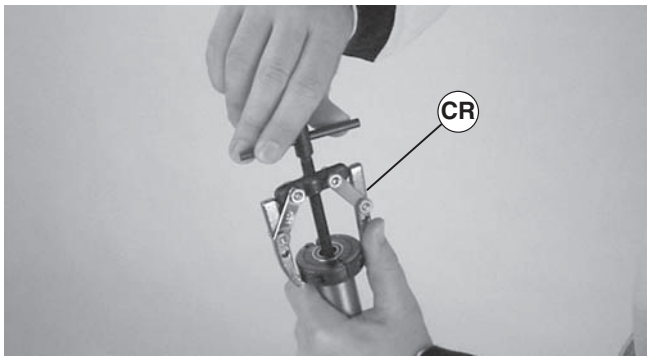

Figure 52

Bearing Installation

IMPORTANT
Install bearings one at a time.

1. Inspect seating surface(s) on spindle shaft for damage. Replace spindle if damaged.
2. Slide bearing (part # 802-121) (Figure 53, item CS) onto spindle shaft.

Figure 53

3. Slide the sleeve of tool (part # 450282) (Figure 54, item CT) over bearing.

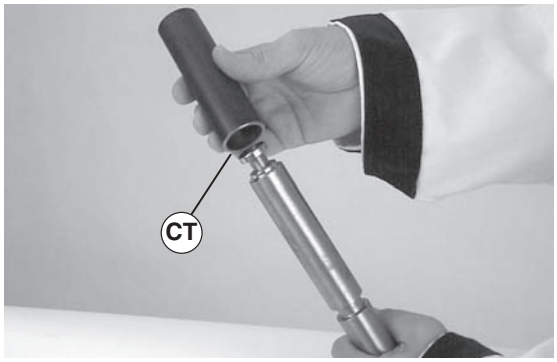

Figure 54

4. Place open end of shaft (Figure 55, item CU) into sleeve.

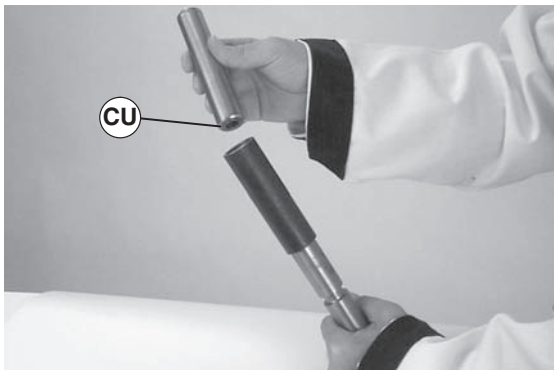

Figure 55

5. Using arbor press or similar device, press bearing onto pulley shaft (see Figure 56).

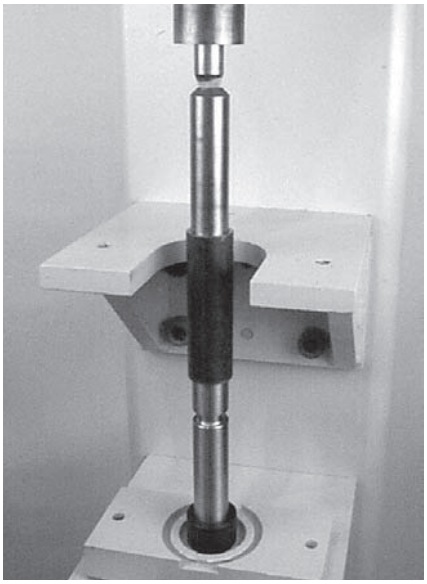

Figure 56

6. Repeat steps 2 through 5 for each bearing.

Bearing Replacement for Drive Pulley

IMPORTANT
Once removed, do not re-use bearings.

Bearing Removal

1. Position drive pulley (Figure 57, item BE) in a standard bearing separator (CV) as shown.

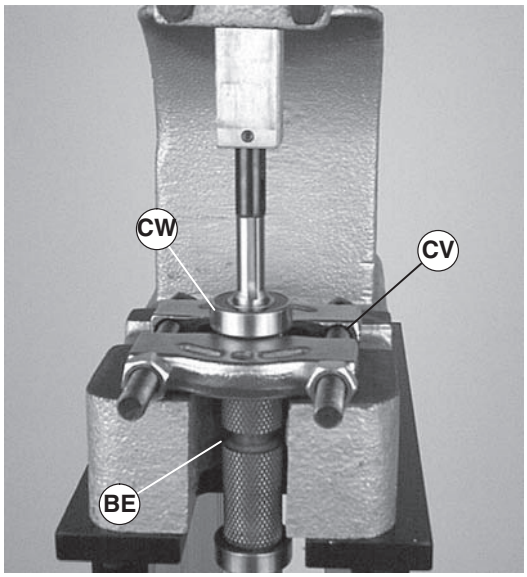

Figure 57

2. Using an arbor press or similar device, press drive pulley (BE) through bearing (CW).
3. Repeat steps 1 through 2 for other bearing.

Bearing Installation

1. Inspect seating surface(s) on drive pulley for damage. Replace drive pulley if damaged.
2. Slide bearing (CW) (part # 802-124) over drive pulley (BE). Place two 5/8 flat washers (Figure 58, item CX), or equivalent, over the drive pulley (BE) and against the bearing.

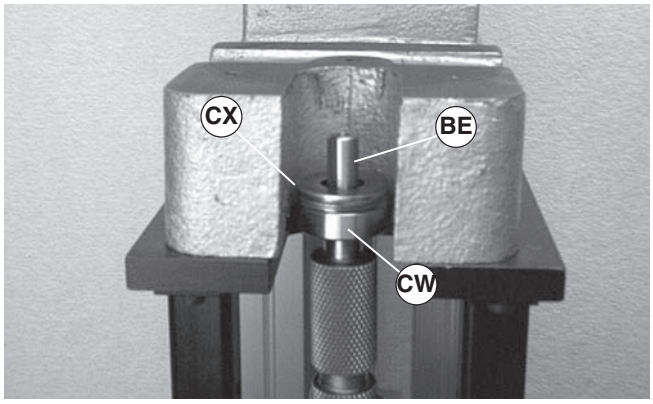

Figure 58

3. Place the shaft of tool (part # 450282) (Figure 59, item CZ) over drive pulley (BE).

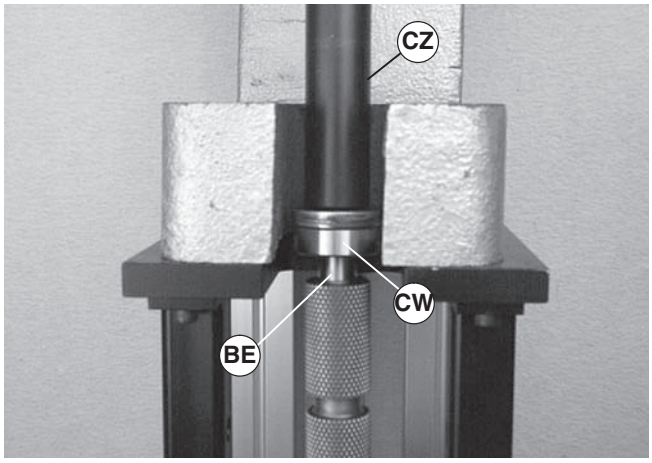

Figure 59

4. Using an arbor press or similar device, press bearing (CW) onto pulley shaft as shown.
5. Repeat steps 1 through 4 for other bearing.

Bearing Replacement for Idler Pulleys

NOTE

Bearings can not be removed from idler pulleys. Replace entire pulley, when worn. See Service Parts section on page 22.

Pulley Installation

A - Tension Pulley

IMPORTANT

On a tension tail assembly, orient both pinion ends (Figure 60, item BT) so they engage the same tooth positions on their respective racks.

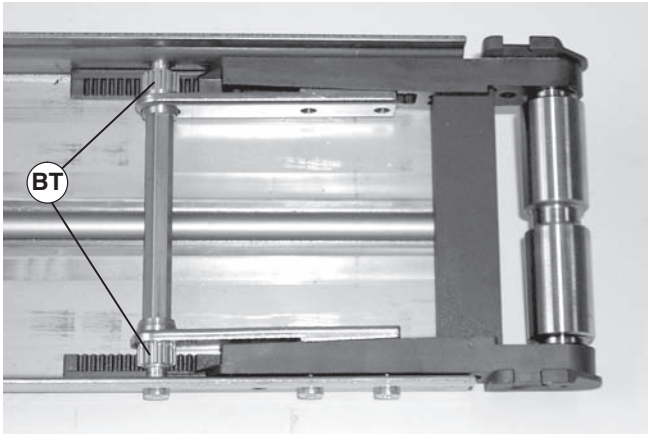

Figure 60

NOTE

Install magnet (BV of Figure Figure 45) end of spindle and bearing assembly (BW) at same location as noted during removal.

1. Reverse the removal procedure “A” (see page page 17).

B - Fixed End Pulley

NOTE

Install magnet (CB of Figure Figure 47) end of spindle and bearing assembly (CC) at same location as noted during removal.

2. Reverse the removal procedure “B” (see page page 18).

C - Drive Pulley

3. Reverse the removal procedure “C” (see page page 18).

D - Idler Pulley

4. Reverse the removal procedure “D” (see page page 19).

Service Parts

NOTE

For replacement parts other than those shown in this section, contact an authorized Dorner Service Center or the factory. Key Service Parts and Kits are identified by the Performance Parts Kits logo . Dorner recommends keeping these parts on hand.

Fixed End Components

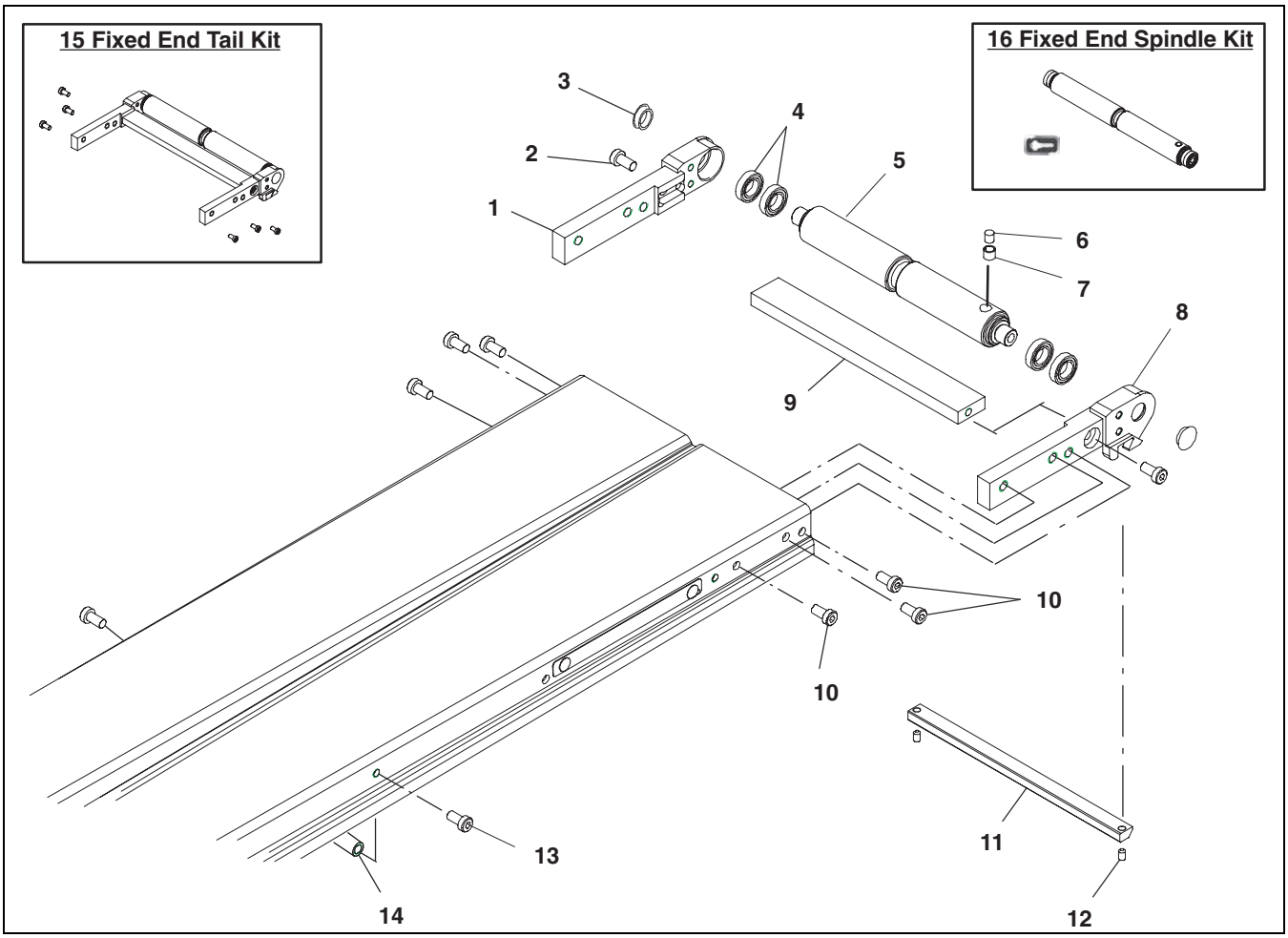

Item	Part Number	Description
1	456021	Head Plate LH 2-3" (51-76mm) Wide
	456022	Head Plate LH 4-18" (102-457mm) Wide
2	807-1022	Low-Head Pilot Screw M5-.8x12mm
3	807-963	Plastic Snap-Out Plug
4	62BK4	Ball Bearing 12mm Bore x 21mm OD(x4)
5	4530WWM	Fixed End Spindle
6	808-202	Magnet, 0.25 x 0.25
7	450226SSP	SS Sleeve, 0.25 Magnet
8	456025	Head Plate RH 2-3" (51-76mm) Wide
	456026	Head Plate RH 4-18" (102-457mm) Wide
9	4536WWM	Support Tension/Fixed
10	920692M	Low-Head Cap Screw M6-1.0x12mm

Item	Part Number	Description
11	4527WWM	Bottom Wiper
12	970508M	Cup-Point Set Screw M5-.80 x 8mm
13	807-1022	Low-Head Pilot Screw M5-.8x12mm
14	4525WWM	Frame Support Post
15	62FT-WW	Fixed End Tail Kit (Includes Items 1 through 10)
16	62T-WW	Fixed End Spindle Kit (Includes Items 3 through 7)
WW = Conveyor width ref.: 02, 03, 04, 05, 06, 08, 10, 12, 18		

Tension End Components

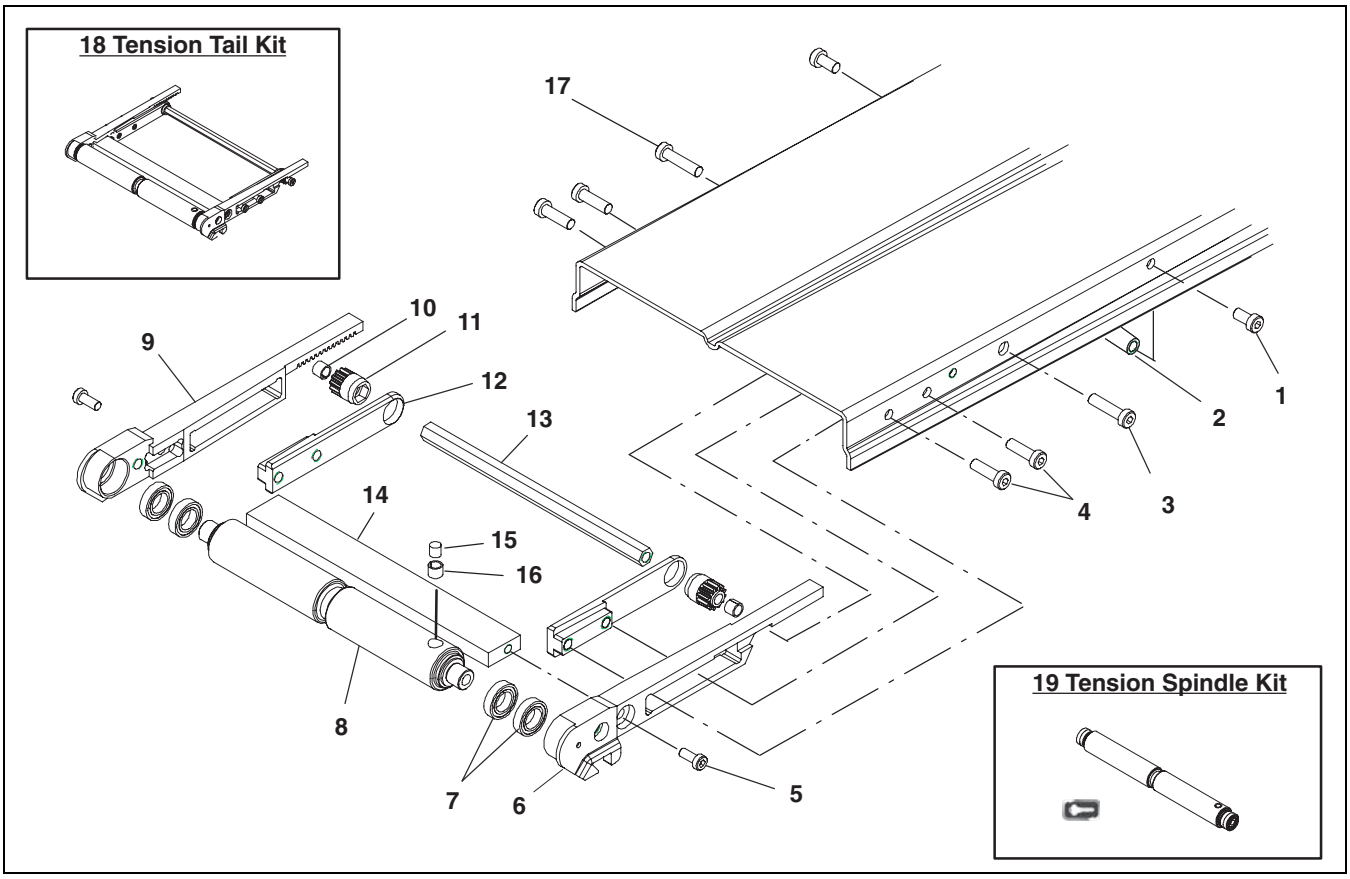

Item	Part Number	Description
1	920692M	Low-Head Cap Screw M6 x 12mm
2	4525WWM	Frame Support Post
3	920695M	Low-Head Cap Screw M6 x 25mm
4	920694M	Low-Head Cap Screw M6 x 20mm
5	807-1022	Low-Head Pilot Screw M5 x 12mm
6	456011	Head Plate Tension RH 2-3” (51-76mm) Wide
	456012	Head Plate Tension RH 4-18” (102-457mm) Wide
7	62BK4	Ball Bearing 12mm Bore x 21mm OD(x4)
8	4530WW	Idler Spindle (includes ref. 16 & 17)
9	456014	Head Plate Tension LH 2-3” (51-76mm) Wide
	456015	Head Plate Tension LH 4-18” (102-457mm) Wide

Item	Part Number	Description
10	456049	Sleeve, 0.312 OD x 0.035 Wall
11	456045	Pinion End
12	456041	Clamp Block
13	4563WW	Hex Pinion
14	4536WW	Support Tension/Fixed
15	808-202	Magnet, 0.25 x 0.25
16	450226SSP	SS Sleeve, 0.25 Magnet
17	807-1317	Low-Head Cap Screw M6 x 12mm (Yellow)
18	62TT-WW	Tension Tail Kit (Includes Items 3 through 17)
19	62T-WW	Tension Spindle Kit (Includes Items 7, 8, 15 and 16)
WW = Conveyor width ref.: 02, 03, 04, 05, 06, 08, 10, 12, 18		

Service Parts

Center Drive Module – 5” (127mm) Through 18” (457mm) Wide Conveyors

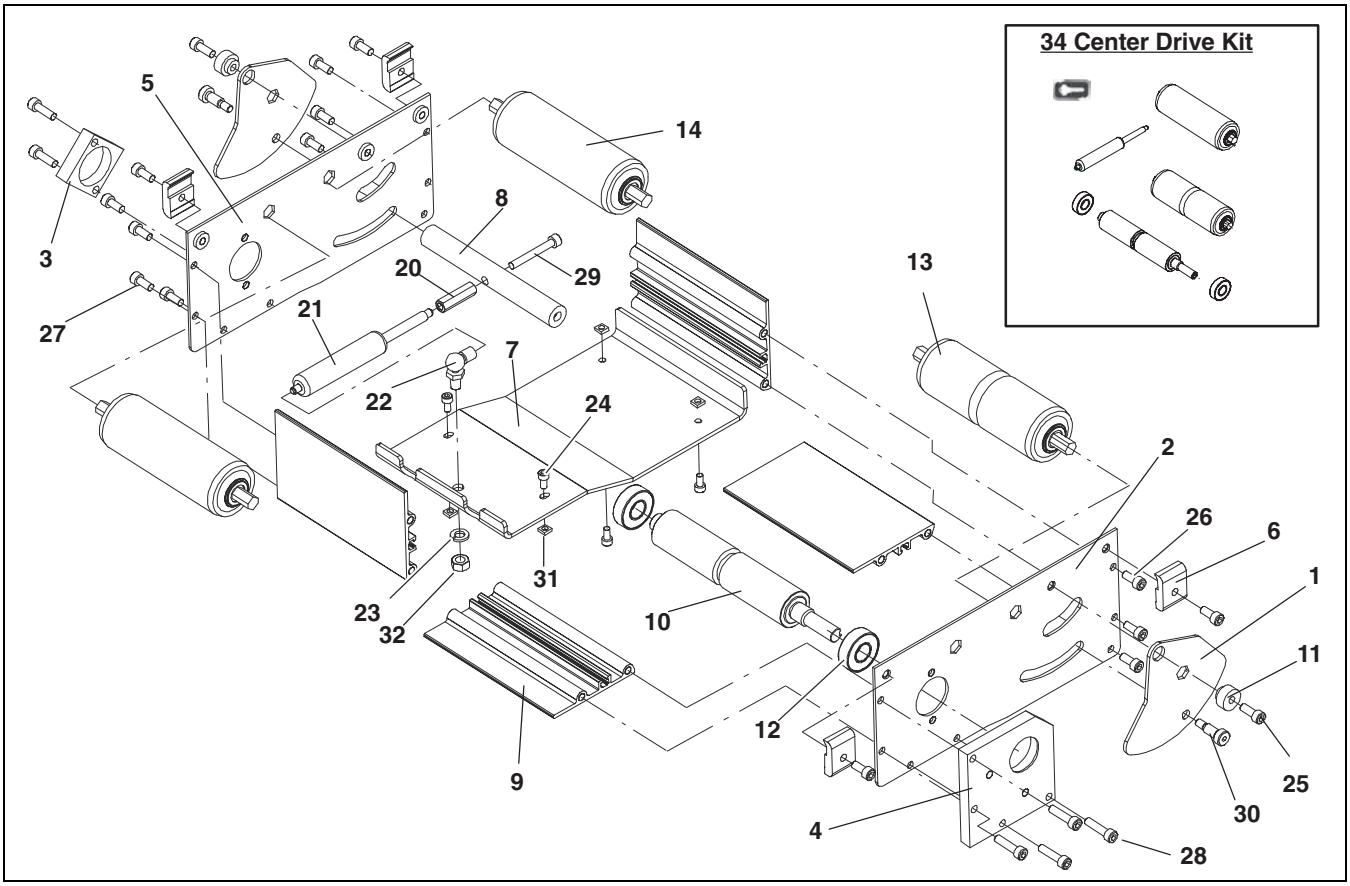

Center Drive Module – 2” (51mm) Through 4” (102mm) Wide Conveyors

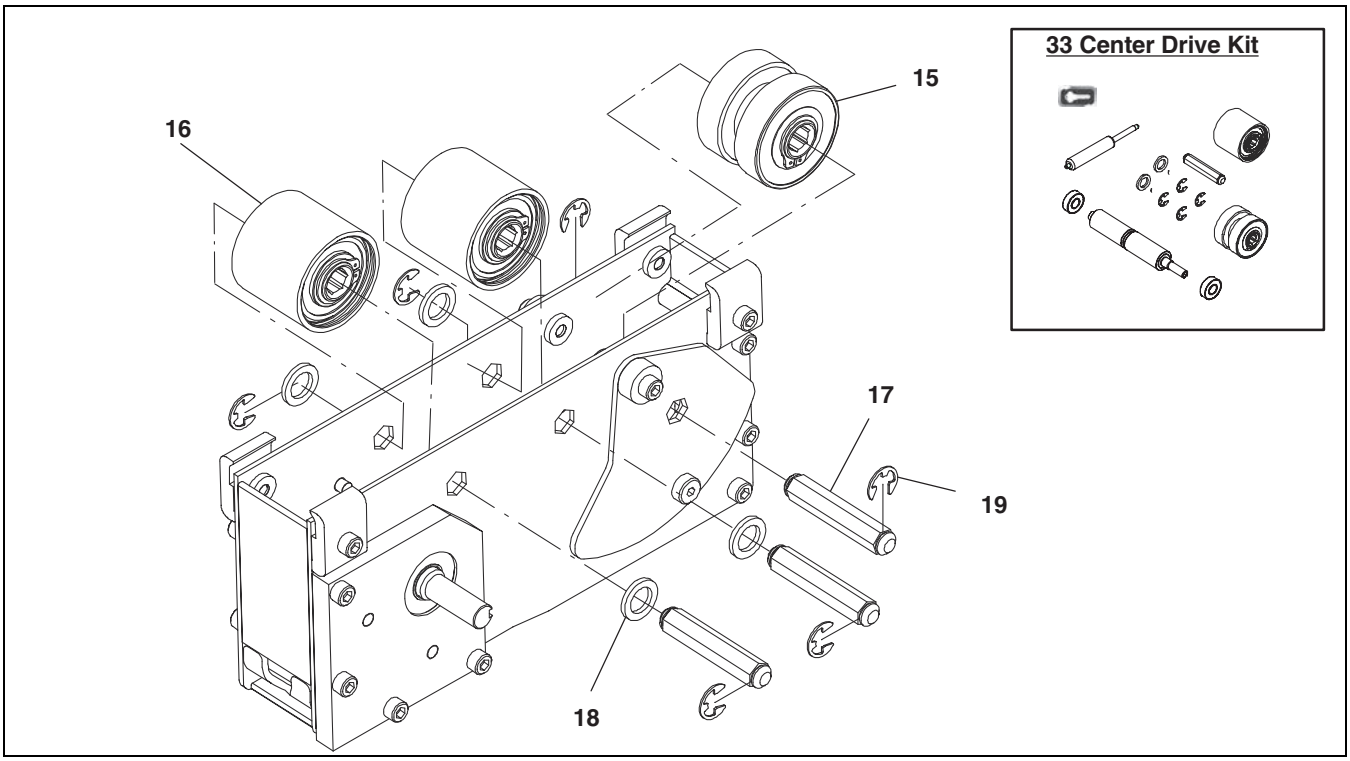

Item	Part Number	Description
1	463026M	Tension Plate Pivot
2	463027M	Side Plate RH
3	463028M	Mounting Block Bearing
4	463029M	Mounting Plate Bearing-Drive
5	463030M	Side Plate LH
6	463031	Mounting Clip
7	4632WWM	Cover Bottom Center Drive 2” (51mm)
8	4633WWM	Rod Tensioning Center Drive 2” (51mm)
9	4635WWM	Rail Support Center Drive 2” (51mm)
10	4637WWM	Spindle Center Drive 2” (51mm)
11	801-117	Bushing Nylon FL 0.24(ID) 0.50(OD)
12	802-124	Ball Bearing 15mm x 35mm x 11 Seal
13	807-1002	Roller, 1.9” 0.44 Hex C-GRV 5” (127mm)
	807-1003	Roller 1.9” 0.44 Hex C-GRV 6” (152mm)
	807-1004	Roller 1.9” 0.44 Hex C-GRV 8” (203mm)
	807-1005	Roller 1.9” 0.44 Hex C-GRV 10” (254mm)
	807-1006	Roller 1.9” 0.44 Hex C-GRV 12” (305mm)
	807-1091	Roller 1.9” 0.44 Hex C-GRV 18” (457mm)
14	807-1009	Roller 1.9” 0.44 Hex SS Flat 5” (127mm)
	807-1010	Roller 1.9” 0.44 Hex SS Flat 6” (152mm)
	807-1011	Roller 1.9” 0.44 Hex SS Flat 8” (203mm)
	807-1012	Roller 1.9” 0.44 Hex SS Flat 10” (254mm)
	807-1013	Roller 1.9” 0.44 Hex SS Flat 12” (305mm)
	807-1088	Roller 1.9” 0.44 Hex SS Flat 18” (457mm)
15	463044	Pulley Sub Assy Grooved 2” (51mm)
	463045	Pulley Sub Assy Grooved 3” (76mm)
	807-1001	Pulley Sub Assy Grooved 4” (102mm)
16	807-2093	Pulley Sub Assy Flat 2” (51mm)
	807-1007	Pulley Sub Assy Flat 3” (76mm)
	807-1008	Pulley Sub Assy Flat 4” (102mm)

Item	Part Number	Description
17	463402	Shaft Hex 2” (51mm)
	463403	Shaft Hex 3” (76mm)
	463404	Shaft Hex 4” (102mm)
18	801-115	Washer Nylon
19	915-215	Retaining Ring, 0.44”
20	807-983	Standoff Hex 13mm x 35mm (lg)
21	807-1040	Gas Spring 2” (51mm) Wide
	807-986	Gas Spring 3” (76mm) Wide
	807-985	Gas Spring 4”-6” (102mm-152mm) Wide
	807-984	Gas Spring 8”-12” (203mm-305mm) Wide
	807-985	Gas Spring 18” (457mm) Wide (2x)
22	807-987	Ball Joint Steel M6-1.0 x m8-1.2
23	911-120	Washer Lock Spring-SS 5/16”
24	920510M	Socket Head Cap Screw Metric M5-0.80 x 10mm
25	920618M	Socket Head Cap Screw Metric M6-1.0 x 18mm
26	920618M	Socket Head Cap Screw Metric M6-1.0 x 18mm
27	920620M	Socket Head Cap Screw Metric M6-1.0 x 20mm
28	920630M	Socket Head Cap Screw Metric M6-1.0 x 30mm
29	920625M	Socket Head Cap Screw Metric M6-1.0 x 25mm
30	940812M	Socket Head Cap Screw Shld Metric 8mm (Dia) x 12mm
31	990503M	Nut Square Heavy M5-.80
32	990801M	Nut Hex Full M8-1.25
33	CDK-WW	2” (51mm) through 4” (102mm) Center Drive Repair Kit [Includes Items 10, 12 (2x), 15, 16, 17, 18 (2x), 19 (4x), and 21]
34	CDK-WW	5” (127mm) through 18” (457mm) Center Drive Repair Kit [Includes Items 10, 12 (2x), 13, 14, and 21]
WW = Conveyor width ref.: 02, 03, 04, 05, 06, 08, 10, 12, 18		

Service Parts

Conveyor Frame and Extension

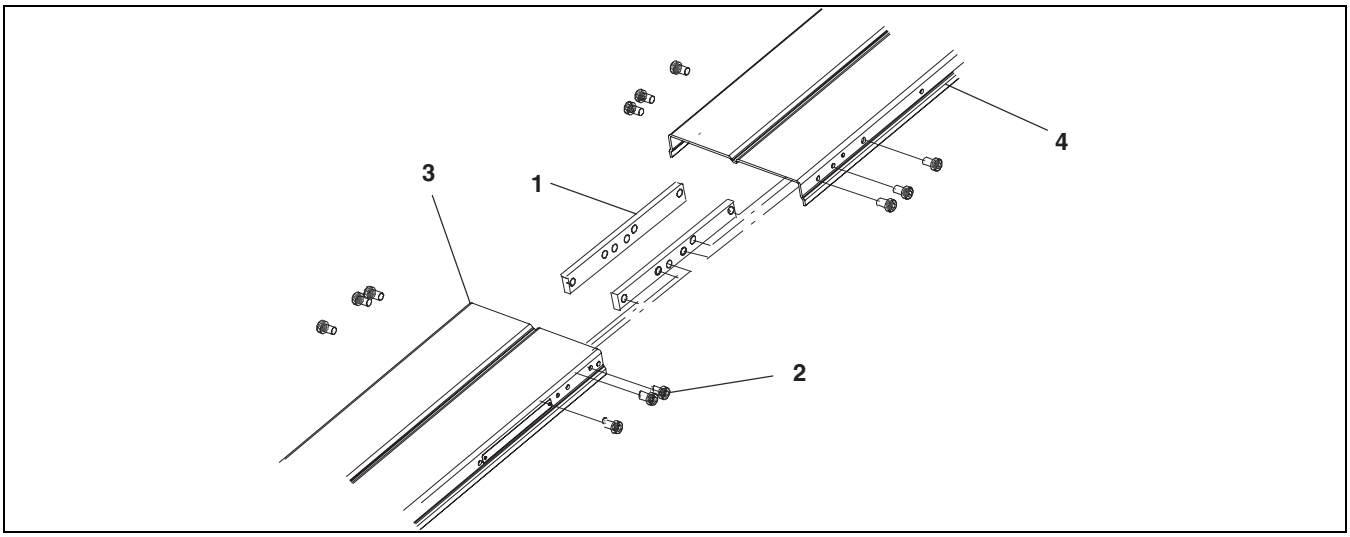

Item	Part Number	Description
1	450160M	Bar Connecting Frame
2	920691M	Low-Head Cap Screw M6-1.0x10mm

Item	Part Number	Description
3	See Conveyor Frame chart	Conveyor Frame
4	See Conveyor Frame chart	Conveyor Frame Extension

Items 3 and 4: Conveyor Frame		
Length	Frame Part Number	Frame Extension Part Number
2’ (610mm)	4720WW-01860	n/a
3’ (914mm)	4720WW-03060	n/a
4’ (1219mm)	4720WW-04260	n/a
5’ (1524mm)	4720WW-05460	n/a
6’ (1829mm)	4720WW-06660	n/a
7’ (2134mm)	4720WW-07860	n/a
8’ (2438mm)	4720WW-09060	n/a
9’ (2743mm)	4720WW-10260	n/a
10’ (3048mm)	4720WW-11460	n/a
11’ (3353mm)	4720WW-12660	n/a
12’ (3658mm)	4720WW-13860	n/a
13’ (3962mm)	4720WW-07860	4740WW

Items 3 and 4: Conveyor Frame		
Length	Frame Part Number	Frame Extension Part Number
14’ (4267mm)	4720WW-09060	4740WW
15’ (4572mm)	4720WW-10260	4740WW
16’ (4877mm)	4720WW-11460	4740WW
17’ (5182mm)	4720WW-12660	4740WW
18’ (5486mm)	4720WW-13860	4740WW
19’ (5791mm)	4720WW-07860	4741WW
20’ (6096mm)	4720WW-09060	4741WW
21’ (6401mm)	4720WW-10260	4741WW
22’ (6706mm)	4720WW-11460	4741WW
23’ (7011mm)	4720WW-12660	4741WW
24’ (7316mm)	4720WW-13860	4741WW
WW = Conveyor width ref.: 02, 03, 04, 05, 06, 08, 10, 12, 18		

-02 0.5” (13mm) Bolt-On High Side Guides

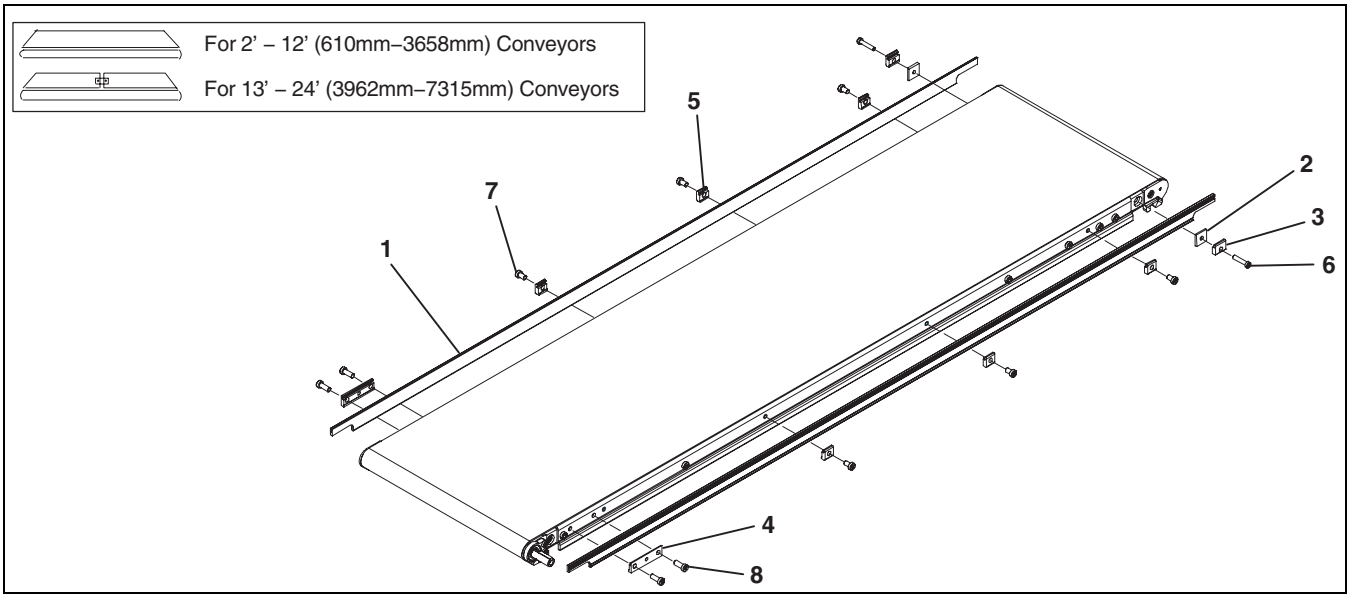

Item	Part Number	Description
1	See chart below	6200 Guide, 0.5” (13mm) HS
2	460058	Spacer Guide Clip
3	460059	Clip Guide, 0.75” long
4	460060	Guide Clip Spacer
5	460250K10	Clip Mounting Guide (x10)
6	807-1359	Low Head Pilot Screw, M5-.80 x 25mm
7	920691M	Low Head Cap Screw, M6-1.00 x 10mm
8	920693M	Low Head Cap Screw, M6-1.00 x 16mm

6200 Guide 0.5” (13mm) HS			
Length		End Guide	End Guide
2’ (610mm)	Left Hand	460055-02400	N/A
	Right Hand	460055-02400	N/A
3’ (914mm)	Left Hand	460055-03600	N/A
	Right Hand	460055-03600	N/A
4’ (1219mm)	Left Hand	460055-04800	N/A
	Right Hand	460055-04800	N/A
5’ (1524mm)	Left Hand	460055-06000	N/A
	Right Hand	460055-06000	N/A
6’ (1829mm)	Left Hand	460055-07200	N/A
	Right Hand	460055-07200	N/A
7’ (2134mm)	Left Hand	460055-08400	N/A
	Right Hand	460055-08400	N/A
8’ (2438mm)	Left Hand	460055-09600	N/A
	Right Hand	460055-09600	N/A
9’ (2743mm)	Left Hand	460055-10800	N/A
	Right Hand	460055-10800	N/A
10’ (3048mm)	Left Hand	460055-12000	N/A
	Right Hand	460055-12000	N/A

6200 Guide 0.5” (13mm) HS			
Length		End Guide	End Guide
11’ (3353mm)	Left Hand	460055-13200	N/A
	Right Hand	460055-13200	N/A
12’ (3658mm)	Left Hand	460055-14400	N/A
	Right Hand	460055-14400	N/A
13’ (3962mm)	Left Hand	460255-08139	460255-07460
	Right Hand	460155-08139	460155-07460
14’ (4267mm)	Left Hand	460255-09339	460255-07460
	Right Hand	460155-09339	460155-07460
15’ (4572mm)	Left Hand	460255-10539	460255-07460
	Right Hand	460155-10539	460155-07460
16’ (4877mm)	Left Hand	460255-11739	460255-07460
	Right Hand	460155-11739	460155-07460
17’ (5182mm)	Left Hand	460255-12939	460255-07460
	Right Hand	460155-12939	460155-07460
18’ (5486mm)	Left Hand	460255-14139	460255-07460
	Right Hand	460155-14139	460155-07460
19’ (5791mm)	Left Hand	460255-08139	460255-14660
	Right Hand	460155-08139	460155-14660
20’ (6096mm)	Left Hand	460255-09339	460255-14660
	Right Hand	460155-09339	460155-14660
21’ (6401mm)	Left Hand	460255-10539	460255-14660
	Right Hand	460155-10539	460155-14660
22’ (6706mm)	Left Hand	460255-11739	460255-14660
	Right Hand	460155-11739	460155-14660
23’ (7010mm)	Left Hand	460255-12939	460255-14660
	Right Hand	460155-12939	460155-14660
24’ (7315mm)	Left Hand	460255-14139	460255-14660
	Right Hand	460155-14139	460155-14660

Service Parts

-03 Bolt-On Side Wipers

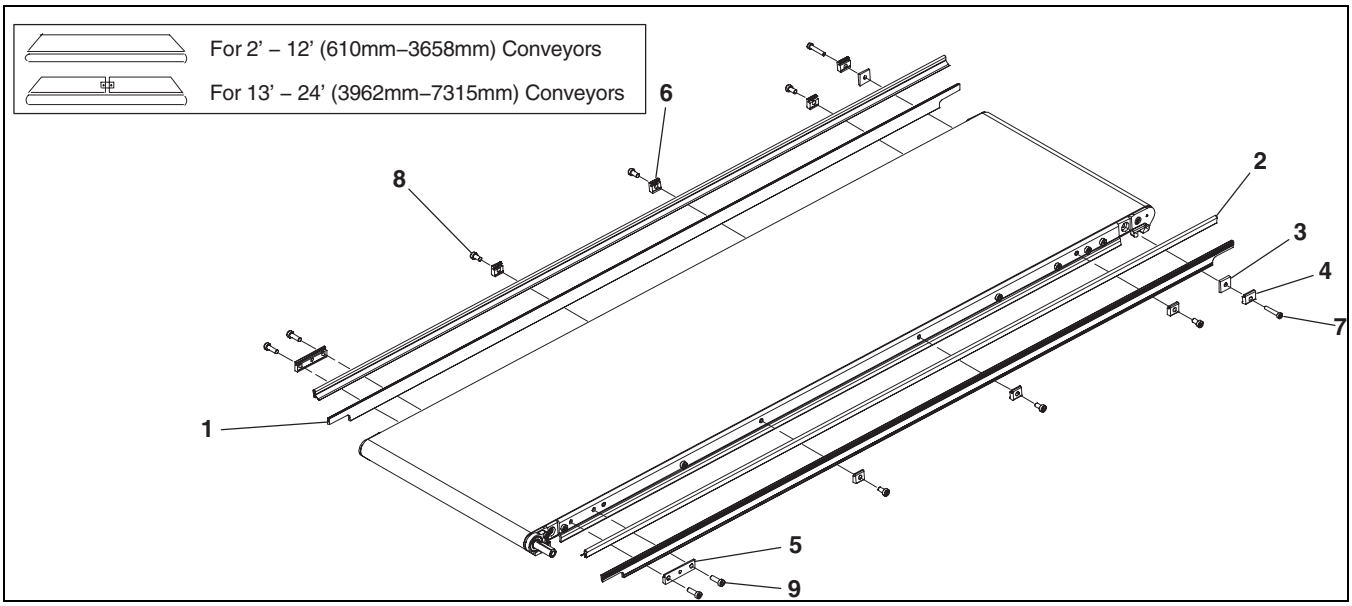

Item	Part Number	Description
1	See chart below	6200 Guide, 0.5" (13mm) HS
2	41-00-24	Wiper Side Nylatron (per foot)
3	460058	Spacer Guide Clip
4	460059	Clip Guide, 0.75" long
5	460060	Guide Clip Spacer
6	460250K10	Clip Mounting Guide (x10)
7	807-1359	Low Head Pilot Screw, M5-.80 x 25mm
8	920691M	Low Head Cap Screw, M6-1.00 x 10mm
9	920693M	Low Head Cap Screw, M6-1.00 x 16mm

6200 Guide 0.5" (13mm) HS			
Length		End Guide	End Guide
2' (610mm)	Left Hand	460055-02400	N/A
	Right Hand	460055-02400	N/A
3' (914mm)	Left Hand	460055-03600	N/A
	Right Hand	460055-03600	N/A
4' (1219mm)	Left Hand	460055-04800	N/A
	Right Hand	460055-04800	N/A
5' (1524mm)	Left Hand	460055-06000	N/A
	Right Hand	460055-06000	N/A
6' (1829mm)	Left Hand	460055-07200	N/A
	Right Hand	460055-07200	N/A
7' (2134mm)	Left Hand	460055-08400	N/A
	Right Hand	460055-08400	N/A
8' (2438mm)	Left Hand	460055-09600	N/A
	Right Hand	460055-09600	N/A
9' (2743mm)	Left Hand	460055-10800	N/A
	Right Hand	460055-10800	N/A
10' (3048mm)	Left Hand	460055-12000	N/A
	Right Hand	460055-12000	N/A
11' (3353mm)	Left Hand	460055-13200	N/A
	Right Hand	460055-13200	N/A
12' (3658mm)	Left Hand	460055-14400	N/A
	Right Hand	460055-14400	N/A

6200 Guide 0.5" (13mm) HS			
Length		End Guide	End Guide
13' (3962mm)	Left Hand	460255-08139	460255-07460
	Right Hand	460155-08139	460155-07460
14' (4267mm)	Left Hand	460255-09339	460255-07460
	Right Hand	460155-09339	460155-07460
15' (4572mm)	Left Hand	460255-10539	460255-07460
	Right Hand	460155-10539	460155-07460
16' (4877mm)	Left Hand	460255-11739	460255-07460
	Right Hand	460155-11739	460155-07460
17' (5182mm)	Left Hand	460255-12939	460255-07460
	Right Hand	460155-12939	460155-07460
18' (5486mm)	Left Hand	460255-14139	460255-07460
	Right Hand	460155-14139	460155-07460
19' (5791mm)	Left Hand	460255-08139	460255-14660
	Right Hand	460155-08139	460155-14660
20' (6096mm)	Left Hand	460255-09339	460255-14660
	Right Hand	460155-09339	460155-14660
21' (6401mm)	Left Hand	460255-10539	460255-14660
	Right Hand	460155-10539	460155-14660
22' (6706mm)	Left Hand	460255-11739	460255-14660
	Right Hand	460155-11739	460155-14660
23' (7010mm)	Left Hand	460255-12939	460255-14660
	Right Hand	460155-12939	460155-14660
24' (7315mm)	Left Hand	460255-14139	460255-14660
	Right Hand	460155-14139	460155-14660

-04 3” (76 mm) Bolt - On High Side Guides

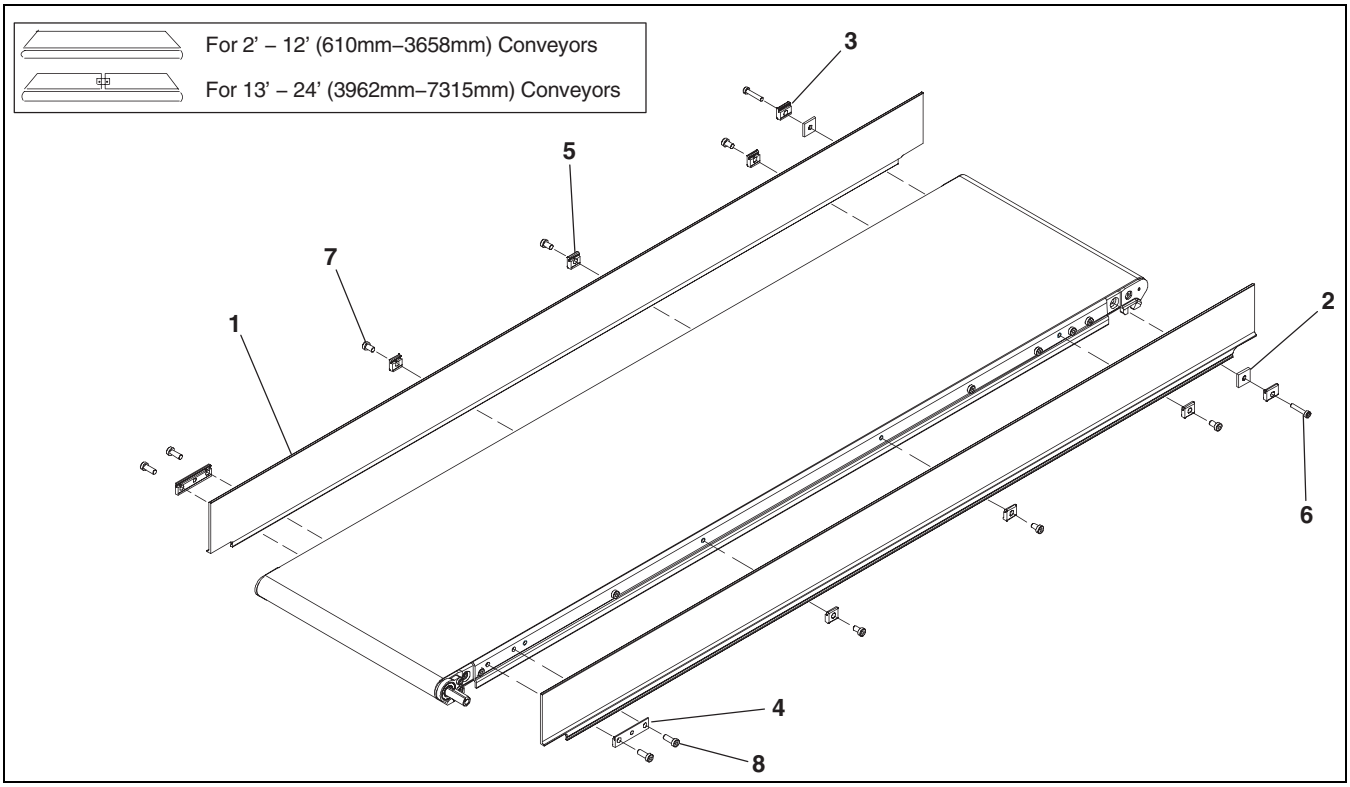

Item	Part Number	Description
1	See chart below	6200 Guide 3” (76mm) HS
2	460058	Spacer Guide Clip
3	460059	Clip Guide, 0.75” long
4	460060	Guide Clip Spacer
5	460250K10	Clip Mounting Guide (x10)
6	807-1359	Low Head Pilot Screw, M5-.80 x 25mm
7	920691M	Low Head Cap Screw, M6-1.00 x 10mm
8	920693M	Low Head Cap Screw, M6-1.00 x 16mm

6200 Guide 3” (76mm) HS			
Length		End Guide	End Guide
2’ (610mm)	Left Hand	460057-02400	N/A
	Right Hand	460057-02400	N/A
3’ (914mm)	Left Hand	460057-03600	N/A
	Right Hand	460057-03600	N/A
4’ (1219mm)	Left Hand	460057-04800	N/A
	Right Hand	460057-04800	N/A
5’ (1524mm)	Left Hand	460057-06000	N/A
	Right Hand	460057-06000	N/A
6’ (1829mm)	Left Hand	460057-07200	N/A
	Right Hand	460057-07200	N/A
7’ (2134mm)	Left Hand	460057-08400	N/A
	Right Hand	460057-08400	N/A
8’ (2438mm)	Left Hand	460057-09600	N/A
	Right Hand	460057-09600	N/A
9’ (2743mm)	Left Hand	460057-10800	N/A
	Right Hand	460057-10800	N/A
10’ (3048mm)	Left Hand	460057-12000	N/A
	Right Hand	460057-12000	N/A

6200 Guide 3” (76mm) HS			
Length		End Guide	End Guide
11’ (3353mm)	Left Hand	460057-13200	N/A
	Right Hand	460057-13200	N/A
12’ (3658mm)	Left Hand	460057-14400	N/A
	Right Hand	460057-14400	N/A
13’ (3962mm)	Left Hand	460257-08139	460257-07460
	Right Hand	460157-08139	460157-07460
14’ (4267mm)	Left Hand	460257-09339	460257-07460
	Right Hand	460157-09339	460157-07460
15’ (4572mm)	Left Hand	460257-10539	460257-07460
	Right Hand	460157-10539	460157-07460
16’ (4877mm)	Left Hand	460257-11739	460257-07460
	Right Hand	460157-11739	460157-07460
17’ (5182mm)	Left Hand	460257-12939	460257-07460
	Right Hand	460157-12939	460157-07460
18’ (5486mm)	Left Hand	460257-14139	460257-07460
	Right Hand	460157-14139	460157-07460
19’ (5791mm)	Left Hand	460257-08139	460257-14660
	Right Hand	460157-08139	460157-14660
20’ (6096mm)	Left Hand	460257-09339	460257-14660
	Right Hand	460157-09339	460157-14660
21’ (6401mm)	Left Hand	460257-10539	460257-14660
	Right Hand	460157-10539	460157-14660
22’ (6706mm)	Left Hand	460257-11739	460257-14660
	Right Hand	460157-11739	460157-14660
23’ (7010mm)	Left Hand	460257-12939	460257-14660
	Right Hand	460157-12939	460157-14660
24’ (7315mm)	Left Hand	460257-14139	460257-14660
	Right Hand	460157-14139	460157-14660

Service Parts

-05 1.5” (38mm) Bolt-On High Side Guides

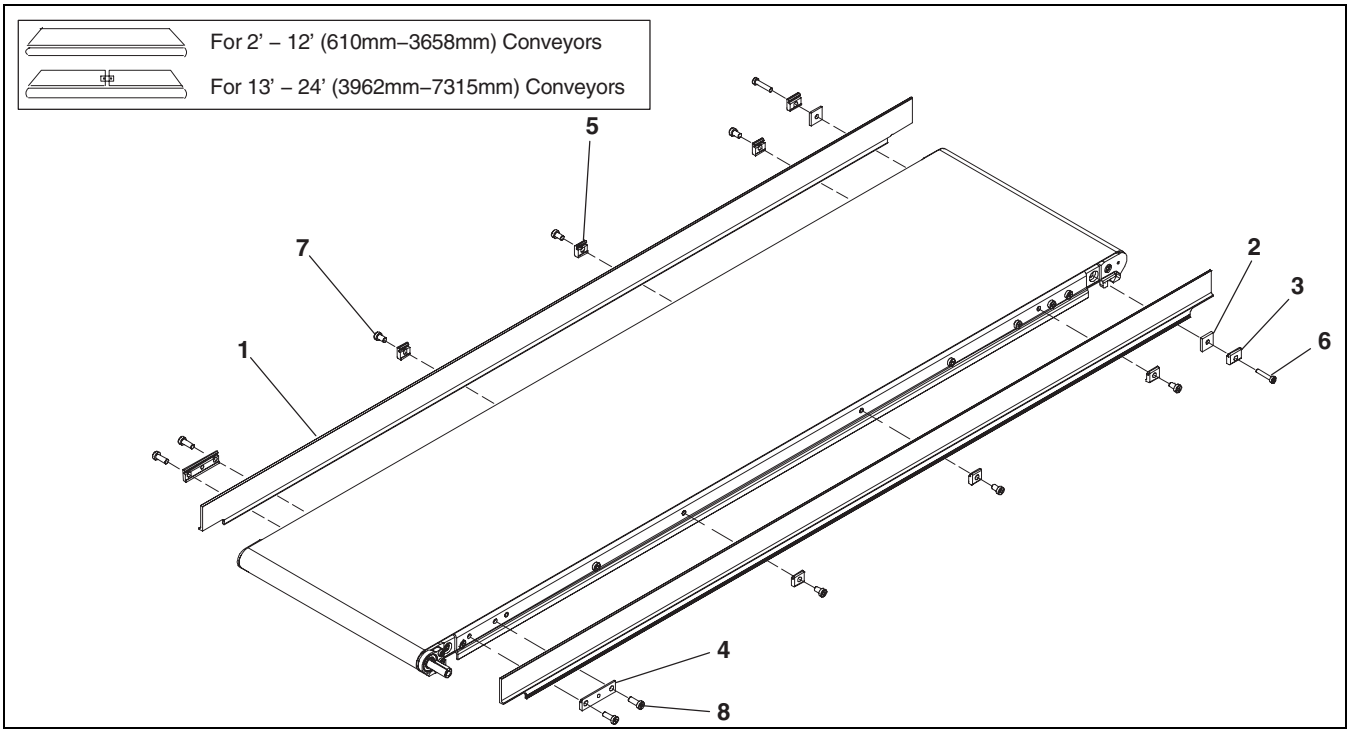

Item	Part Number	Description
1	See chart below	6200 Guide 1.5” (38mm) HS
2	460058	Spacer Guide Clip
3	460059	Clip Guide, 0.75” long
4	460060	Guide Clip Spacer
5	460250K10	Clip Mounting Guide (x10)
6	807-1359	Low Head Pilot Screw, M5-.80 x 25mm
7	920691M	Low Head Cap Screw, M6-1.00 x 10mm
8	920693M	Low Head Cap Screw, M6-1.00 x 16mm

6200 Guide 1.5” (38mm) HS			
Length		End Guide	End Guide
2’ (610mm)	Left Hand	460056-02400	N/A
	Right Hand	460056-02400	N/A
3’ (914mm)	Left Hand	460056-03600	N/A
	Right Hand	460056-03600	N/A
4’ (1219mm)	Left Hand	460056-04800	N/A
	Right Hand	460056-04800	N/A
5’ (1524mm)	Left Hand	460056-06000	N/A
	Right Hand	460056-06000	N/A
6’ (1829mm)	Left Hand	460056-07200	N/A
	Right Hand	460056-07200	N/A
7’ (2134mm)	Left Hand	460056-08400	N/A
	Right Hand	460056-08400	N/A
8’ (2438mm)	Left Hand	460056-09600	N/A
	Right Hand	460056-09600	N/A
9’ (2743mm)	Left Hand	460056-10800	N/A
	Right Hand	460056-10800	N/A
10’ (3048mm)	Left Hand	460056-12000	N/A
	Right Hand	460056-12000	N/A

6200 Guide 1.5” (38mm) HS			
Length		End Guide	End Guide
11’ (3353mm)	Left Hand	460056-13200	N/A
	Right Hand	460056-13200	N/A
12’ (3658mm)	Left Hand	460056-14400	N/A
	Right Hand	460056-14400	N/A
13’ (3962mm)	Left Hand	460256-08139	460256-07460
	Right Hand	460156-08139	460156-07460
14’ (4267mm)	Left Hand	460256-09339	460256-07460
	Right Hand	460156-09339	460156-07460
15’ (4562mm)	Left Hand	460256-10539	460256-07460
	Right Hand	460156-10539	460156-07460
16’ (4877mm)	Left Hand	460256-11739	460256-07460
	Right Hand	460156-11739	460156-07460
17’ (5182mm)	Left Hand	460256-12939	460256-07460
	Right Hand	460156-12939	460156-07460
18’ (5486mm)	Left Hand	460256-14139	460256-07460
	Right Hand	460156-14139	460156-07460
19’ (5691mm)	Left Hand	460256-08139	460256-14660
	Right Hand	460156-08139	460156-14660
20’ (6096mm)	Left Hand	460256-09339	460256-14660
	Right Hand	460156-09339	460156-14660
21’ (6401mm)	Left Hand	460256-10539	460256-14660
	Right Hand	460156-10539	460156-14660
22’ (6706mm)	Left Hand	460256-11739	460256-14660
	Right Hand	460156-11739	460156-14660
23’ (7010mm)	Left Hand	460256-12939	460256-14660
	Right Hand	460156-12939	460156-14660
24’ (7315mm)	Left Hand	460256-14139	460256-14660
	Right Hand	460156-14139	460156-14660

-13 Fully Adjustable UHMW Guides

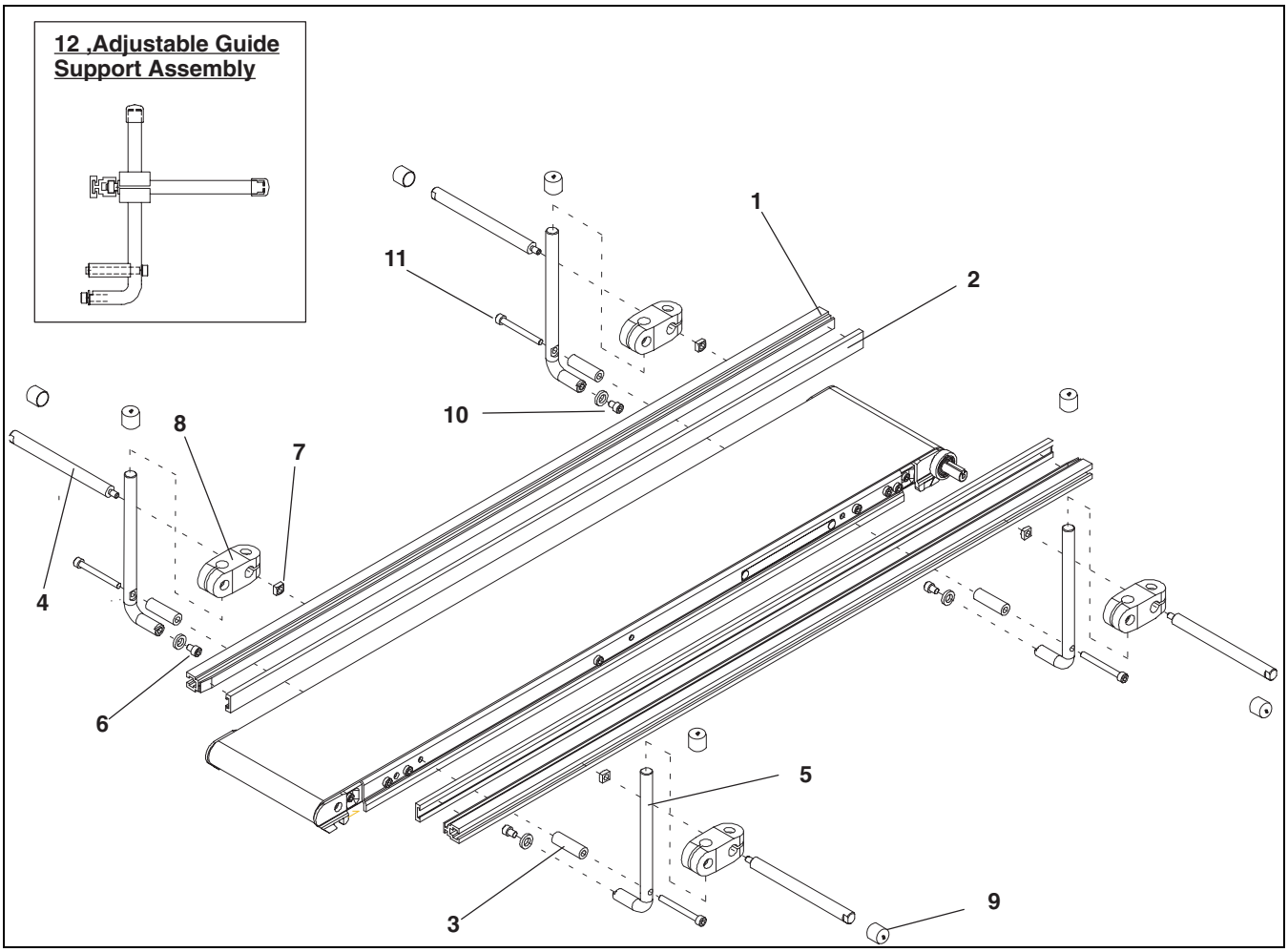

Item	Part Number	Description
1	202983	Guide Mounting Rail 2' (610mm)
	202984	Guide Mounting Rail 3' (914mm)
	202985	Guide Mounting Rail 4' (1219mm)
	202986	Guide Mounting Rail 5' (1524mm)
	202987	Guide Mounting Rail 6' (1829mm)
	202988	Guide Mounting Rail 7' (2134mm)
	202989	Guide Mounting Rail 8' (2438mm)
	202990	Guide Mounting Rail 9' (2743mm)
	202991	Guide Mounting Rail 10' (3053mm)
	202992	Guide Mounting Rail 11' (3353mm)
	202993	Guide Mounting Rail 12' (3658mm)
	202994	Guide Mounting Rail 13' (3962mm)
2	614068P	Guide Extruded Flat (per foot)

Item	Part Number	Description
3	461351	Shaft Brace
4	202028M	Horizontal Shaft Mounting Guide
5	461350M	Shaft Vertical Adj Guide
6	605279P	Hard Washer
7	674175MP	Square Nut M6-1.0 w/1/4-20
8	807-652	Cross Block
9	807-948	Cap Vinyl
10	920608M	Socket Head Cap Screw M6-1.0 x 8mm
11	920655M	Socket Head Cap Screw M6-1.0 x 55mm
12	461300M	Support Assembly, Adjustable Guide (Includes Items: 3 through 12)

Service Parts

-20 Adjustable Width UHMW Guides

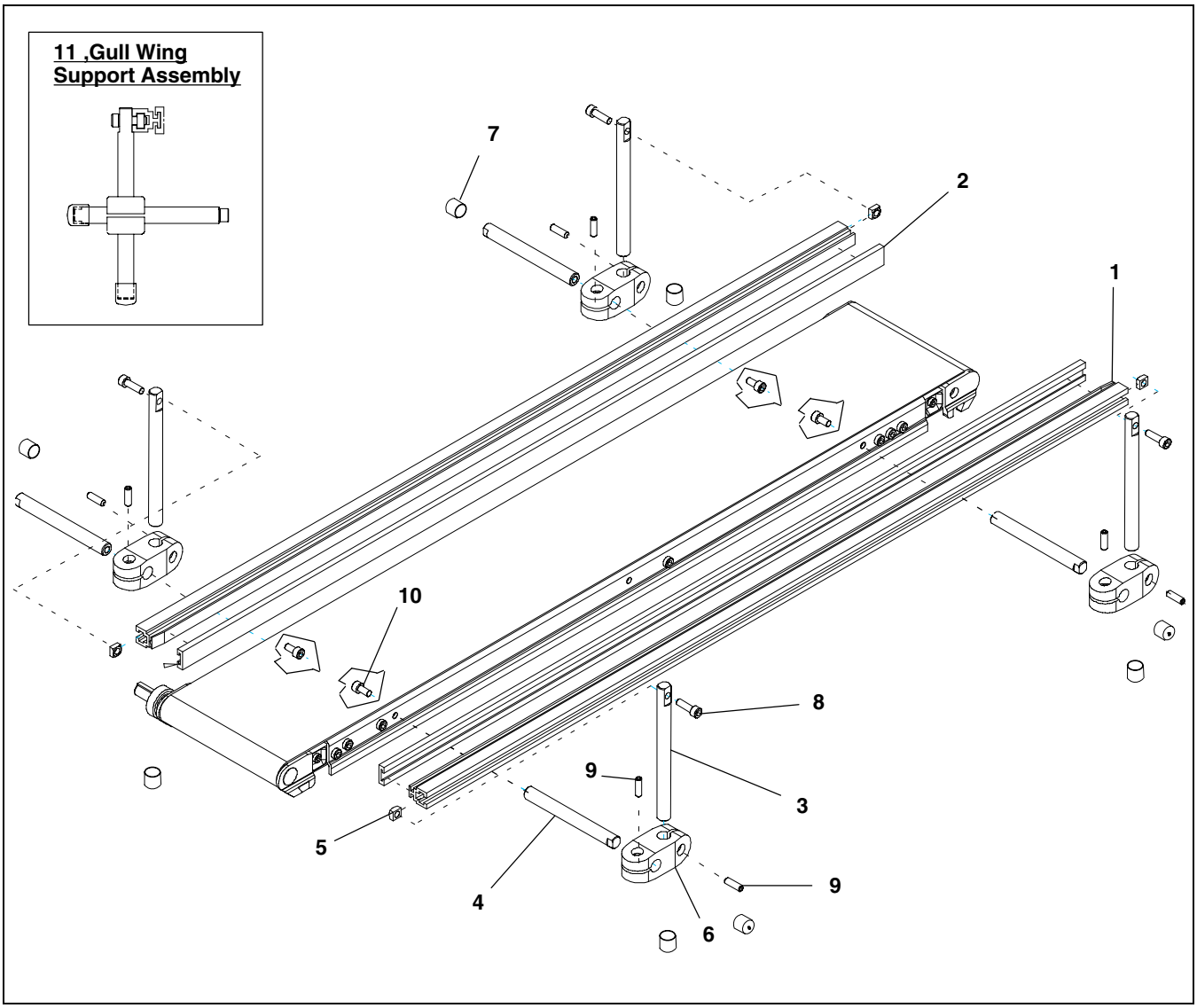

Item	Part Number	Description
1	202983	Guide Mounting Rail 2' (610mm)
	202984	Guide Mounting Rail 3' (914mm)
	202985	Guide Mounting Rail 4' (1219mm)
	202986	Guide Mounting Rail 5' (1524mm)
	202987	Guide Mounting Rail 6' (1829mm)
	202988	Guide Mounting Rail 7' (2134mm)
	202989	Guide Mounting Rail 8' (2438mm)
	202990	Guide Mounting Rail 9' (2743mm)
	202991	Guide Mounting Rail 10' (3053mm)
	202992	Guide Mounting Rail 11' (3353mm)
	202993	Guide Mounting Rail 12' (3658mm)
	202994	Guide Mounting Rail 13' (3962mm)
2	614068P	Guide Extruded Flat (per foot)
3	462050M	Vertical Shaft Gullwing Guide
4	462052M	Horizontal Shaft Gullwing Guide
5	674175MP	Square Nut M6-1.0 w/1/4-20
6	807-652	Cross Block

Item	Part Number	Description
7	807-948	Cap Vinyl
8	920620M	Socket Head Cap Screw M6-1.0 x 20mm
9	970620M	Socket Head Set Screw M6-1.0 x 20mm
10	920612M	Socket Head Cap Screw M6-1.0 x 12mm
11	462300M	Support Assembly, Gull Wing (Includes Items: 3 through 9)

2” (51mm) Through 6” (152mm) Wide Flat Belt Return Rollers

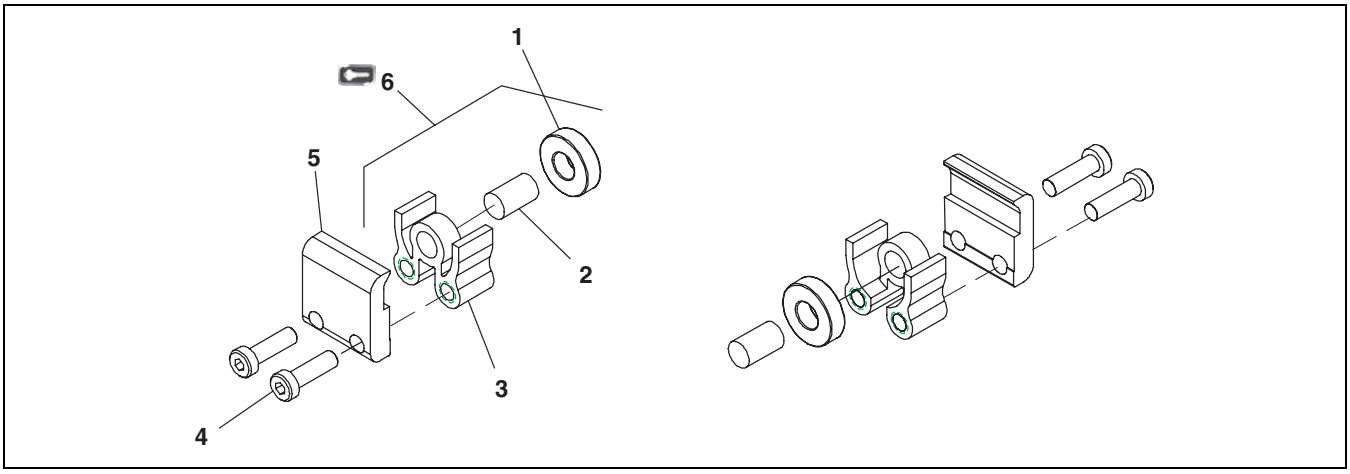

Item	Part Number	Description
1	802-027	Sealed Ball Bearing
2	913-103	Dowel Pin
3	450598	Return Roller Guard

Item	Part Number	Description
4	920694M	Low-Head Cap Screw M6-1.0 x 20mm
5	450599	Return Roller Clip Flat Belt
6	240840	Roller Assy.

8” (203mm) Through 18” (457mm) Wide Flat Belt Return Roller

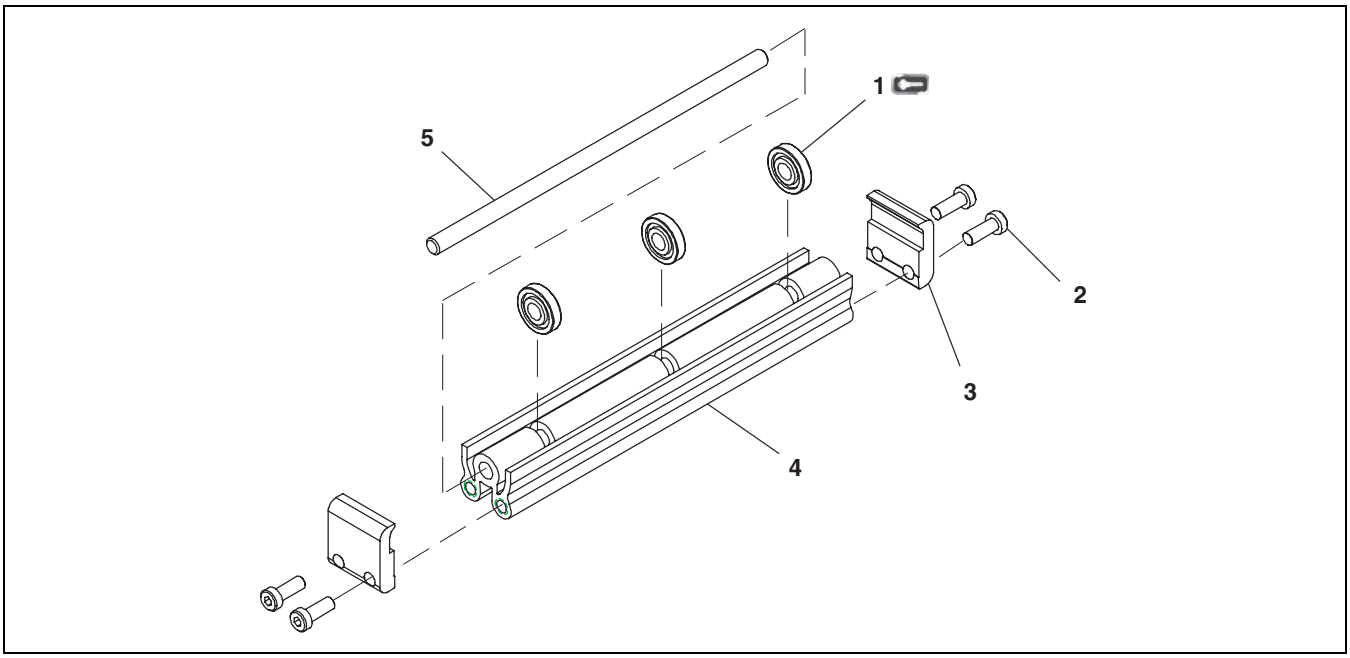

Item	Part Number	Description
1	240826	Return Roller
2	920693M	Low-Head Cap Screw M6-1.0 x 16mm
3	450599	Return Roller Clip Flat Belt

Item	Part Number	Description
4	4511WW	Return Roller Guard
5	2410WW	Return Roller Rod
WW = Conveyor width ref.: 08, 10, 12, 18		

Service Parts

Conveyor Mounting Brackets

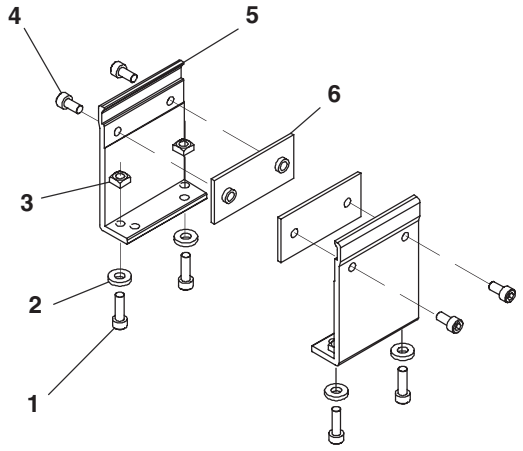

Item	Part Number	Description
1	920620M	Socket Head Cap Screw M6-1.0 x 20mm
2	605279P	Hard Washer
3	807-920	Square Nut M6-1.0

Item	Part Number	Description
4	920612M	Socket Head Cap Screw M6-1.0 x 12mm
5	456031	Stand/Conveyor Mounting Bracket
6	450588	Mount Plate - Flat Belt

Configuring Conveyor Belt Part Number

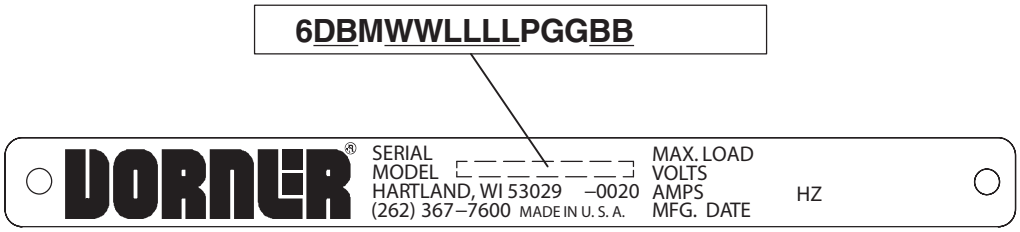

Figure 61

Refer to your serial and model number plate (Figure Figure 61). From the model number, determine conveyor width (WW), length (LLLL), and belt type (BB). Use data to configure belt part number as indicated below.

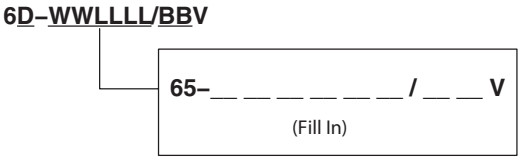

EXAMPLE:

651M030200A0102 Conveyor

6200 Series center drive conveyor without wiper, with mounting brackets, USA English documentation, 3” (76mm) wide x 2.0 ft (610mm) long, shaft position A, guide profile 01 and belt type /02 (general purpose)

65-030200/02V Belt

Notes

Return Policy

Returns must have prior written factory authorization or they will not be accepted. Items that are returned to Dorner without authorization will not be credited nor returned to the original sender. When calling for authorization, please have the following information ready for the Dorner factory representative or your local distributor:

1. Name and address of customer.
2. Dorner part number(s) of item(s) being returned.
3. Reason for return.
4. Customer's original order number used when ordering the item(s).
5. Dorner or distributor invoice number (if available, part serial number).

A representative will discuss action to be taken on the returned items and provide a Returned Goods Authorization (RMA) number for reference. RMA will automatically close 30 days after being issued. To get credit, items must be new and undamaged. There will be a return charge on all items returned for credit, where Dorner was not at fault. It is the customer's responsibility to prevent damage during return shipping. Damaged or modified items will not be accepted. The customer is responsible for return freight.

Conveyors and conveyor accessories	
Standard catalog conveyors	30%
MPB, 7200, 7300 Series, cleated and specialty belt	50%
AquaGard & AquaPruf Series conveyors	non-returnable items
Engineered to order products	case by case
Drives and accessories	30%
Sanitary stand supports	non-returnable items

Parts	
Standard stock parts	30%
Plastic chain, cleated and specialty belts	non-returnable items

Returns will not be accepted after 60 days from original invoice date. The return charge covers inspection, cleaning, disassembly, disposal and reissuing of components to inventory. If a replacement is needed prior to evaluation of returned item, a purchase order must be issued. Credit (if any) is issued only after return and evaluation is complete.

Dorner has representatives throughout the world. Contact Dorner for the name of your local representative. Our Customer Service Team will gladly help with your questions on Dorner products.

For a copy of Dorner's Warranty, contact factory, distributor, service center or visit our website at www.dorner.com.

For replacement parts, contact an authorized Dorner Service Center or the factory.

Dorner Mfg. Corp. reserves the right to change or discontinue products without notice. All products and services are covered in accordance with our standard warranty. All rights reserved. © Dorner Mfg. Corp. 2012

DORNER MFG. CORP.
975 Cottonwood Ave., PO Box 20
Hartland, WI 53029-0020 USA
TEL 1-800-397-8664 (USA)
FAX 1-800-369-2440 (USA)
Internet: www.dorner.com

Outside the USA:
TEL 1-262-367-7600
FAX 1-262-367-5827

851-571 Rev. E

Printed in U.S.A.