ENGINEERING MANUAL

Superior V-Guided Belt Tracking

Universal Motor & Mounting Package

Fast & Simple to Use Online Configurator

Industry-Best Product Transfers

# 2200 LOW PROFILE
# 2200 PRECISION MOVE
# 2700 MEDIUM DUTY

DORNER®

By Columbus McKinnon

## 2200 Low Profile

- 32 mm (1.25 in) roller diameter, widths from 44 mm (1.75 in) to 610 mm (24 in), low profile design for precise handling of products and small spaces

## 2700 Medium Duty Conveyors

- 60 mm (2.4 in) roller diameter, widths from 203 mm (8 in) to 914 mm (36 in), larger frame and bearings for greater load capacity

## Sleek Frame Designs

- Sturdy single-piece frame with universal T-Slot for fast and simple attachment of accessories and guiding with industry available hardware

## Precision Move

- Provides accurate alignment of both time and distance to move products efficiently in assembly automation applications

## iDrive

- The industry's most compact drive saves space and reduces integration time

## LPZs

- Sleek, low profile Z-Frame Conveyors are ideal for product elevation changes and can easily fit under machinery

## The Benefits of a Dorner 2200/2700 Series Conveyor

**Low Maintenance**

- Dorners industry best v-guiding provides positive belt tracking, even under demanding side load applications
- Precise rack and pinion belt tensioning allows for fast and simple tensioning
- Sealed for life bearings reduce maintenance
- Universal Drive provides flexibility in design layout and simplicity in spare part management

**Time Saving**

- Dorner's online configurator engineers simple or complex conveyors to meet your needs in minutes
- The industry leading tool delivers a complete 3D CAD assembly model for instant validation of fit
- Dorner provides the industry's fastest lead times with conveyors shipping in as little as 3 business days

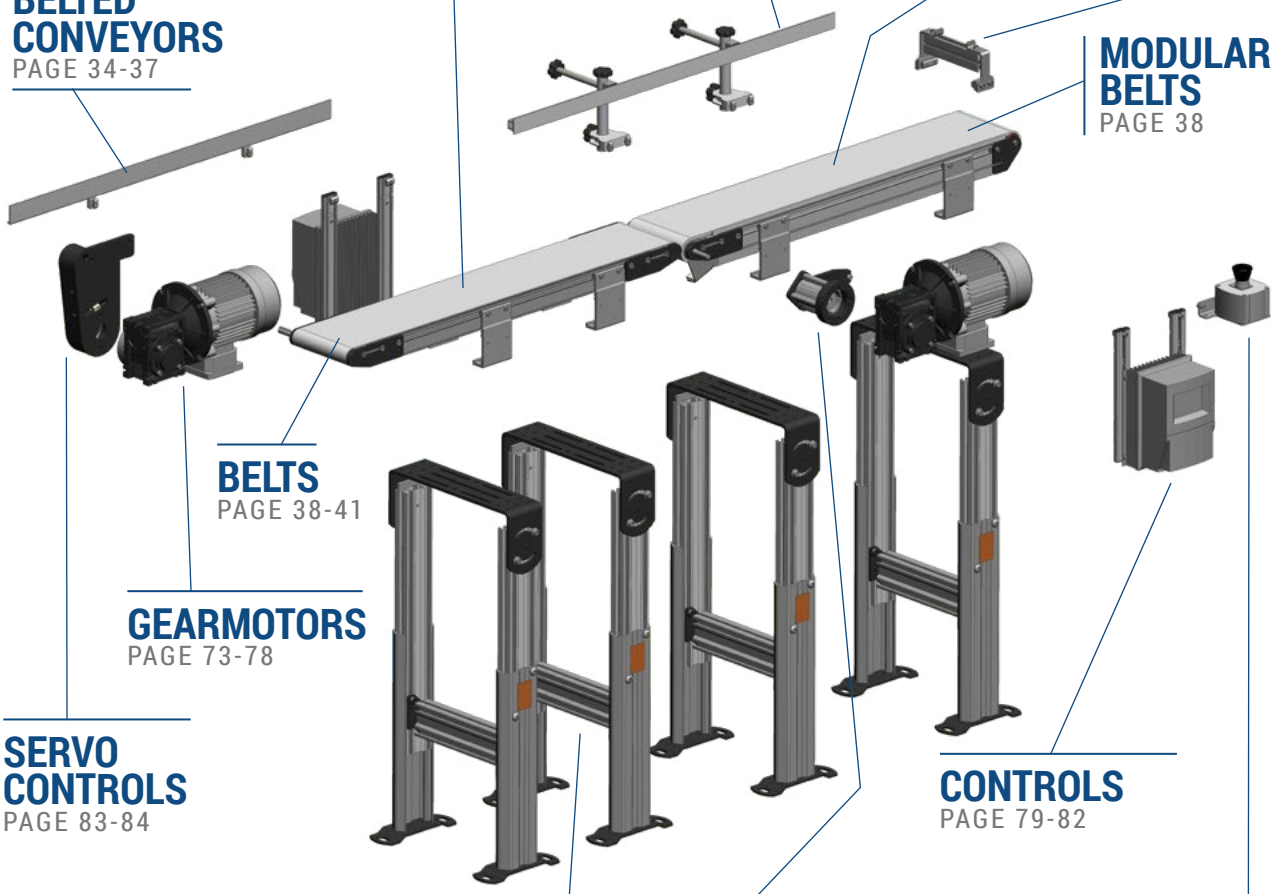

**PROFILES AND GUIDING BELTED CONVEYORS**
PAGE 34-37

**BELTED CONVEYORS**
PAGE 4-25

**PROFILES AND GUIDING**
PAGE 34-37

**ACCESSORIES**
PAGE 96-103

**MODULAR BELT CONVEYORS AND PROFILES**
PAGE 42-54

**MODULAR BELTS**
PAGE 38

**BELTS**
PAGE 38-41

**GEARMOTORS**
PAGE 73-78

**SERVO CONTROLS**
PAGE 83-84

**CONTROLS**
PAGE 79-82

**GEARMOTOR MOUNTING PACKAGES**
PAGE 55-72

**SUPPORT STANDS AND ACCESSORIES**
PAGE 90-95

**CONTROL ACCESSORIES**
PAGE 85-86

**COMMON DRIVE CONVEYORS**
PAGE 87

**GRAVITY ROLLER CONVEYORS**
PAGE 88-89

**TECHNICAL DATA & CALCULATIONS**
PAGE 104-120

## HARD ANODIZED ALUMINUM BEDPLATE
PROVIDES DURABILITY WITHOUT ADDING WEIGHT

## URETHANE BELTING
FOR LONG LIFE AND VIRTUALLY INVISIBLE BELT SPLICE

## V-GROOVED BEDPLATE AND V-GUIDED BELTS
PROVIDE MAINTENANCE FREE BELT TRACKING

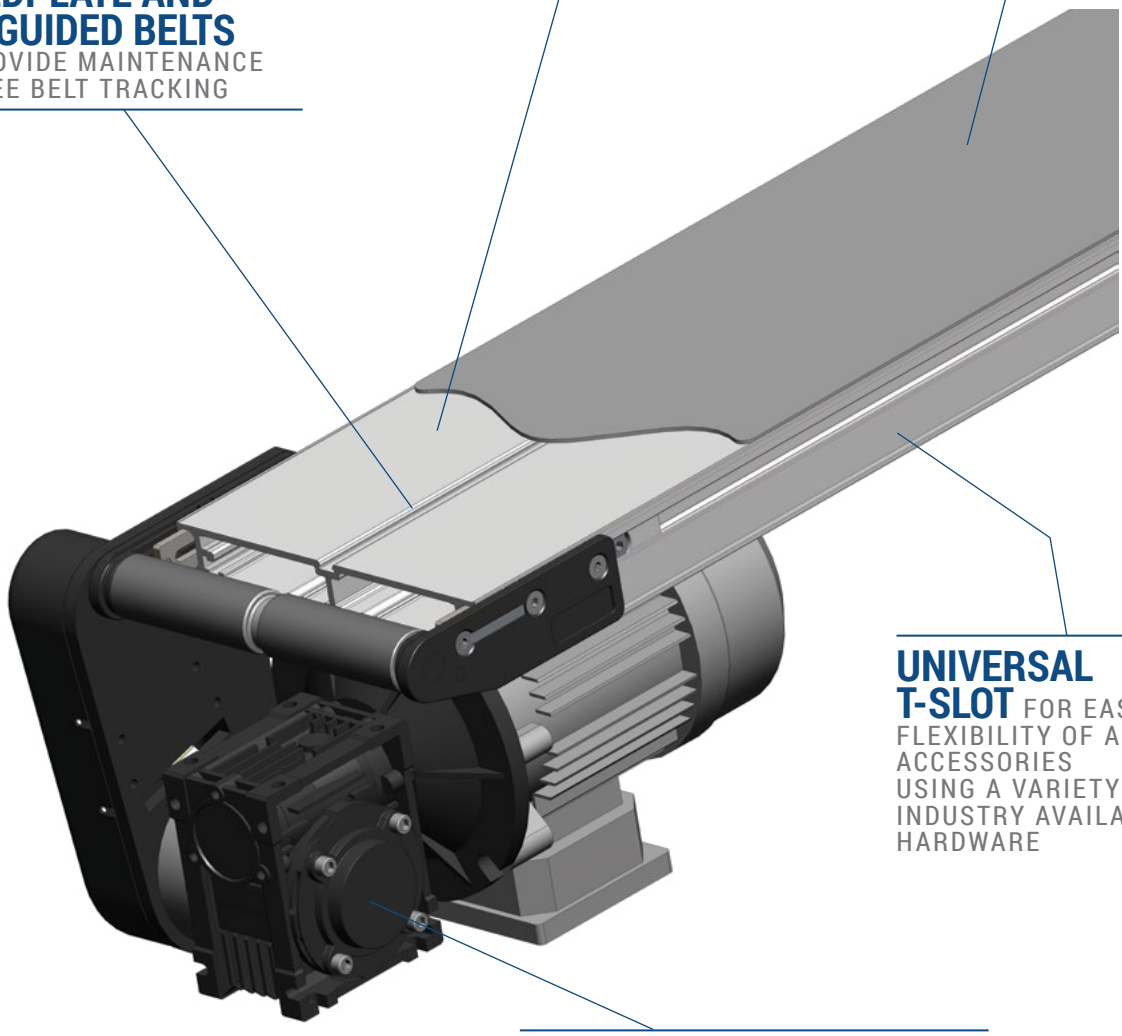

## UNIVERSAL T-SLOT
FOR EASE AND FLEXIBILITY OF ADDING ACCESSORIES USING A VARIETY OF INDUSTRY AVAILABLE HARDWARE

## eDRIVE®
LOW INERTIA ROTOR ALUMINUM BODY MOTORS PROVIDE LOW TEMPERATURES IN SMALL PACKAGE

## UNIVERSAL DRIVE
SINGLE PART NUMBER MOTOR/MOUNT/DRIVE PACKAGE COVERS ALL SPEED, LOAD AND MOUNTING POSITIONS FOR END DRIVE CONVEYORS

Center Drive



Mid Drive

## CENTER AND MID DRIVE OPTIONS

FREES UP SPACE ON BOTH ENDS OF THE CONVEYOR AND INCREASES LOAD CAPACITY

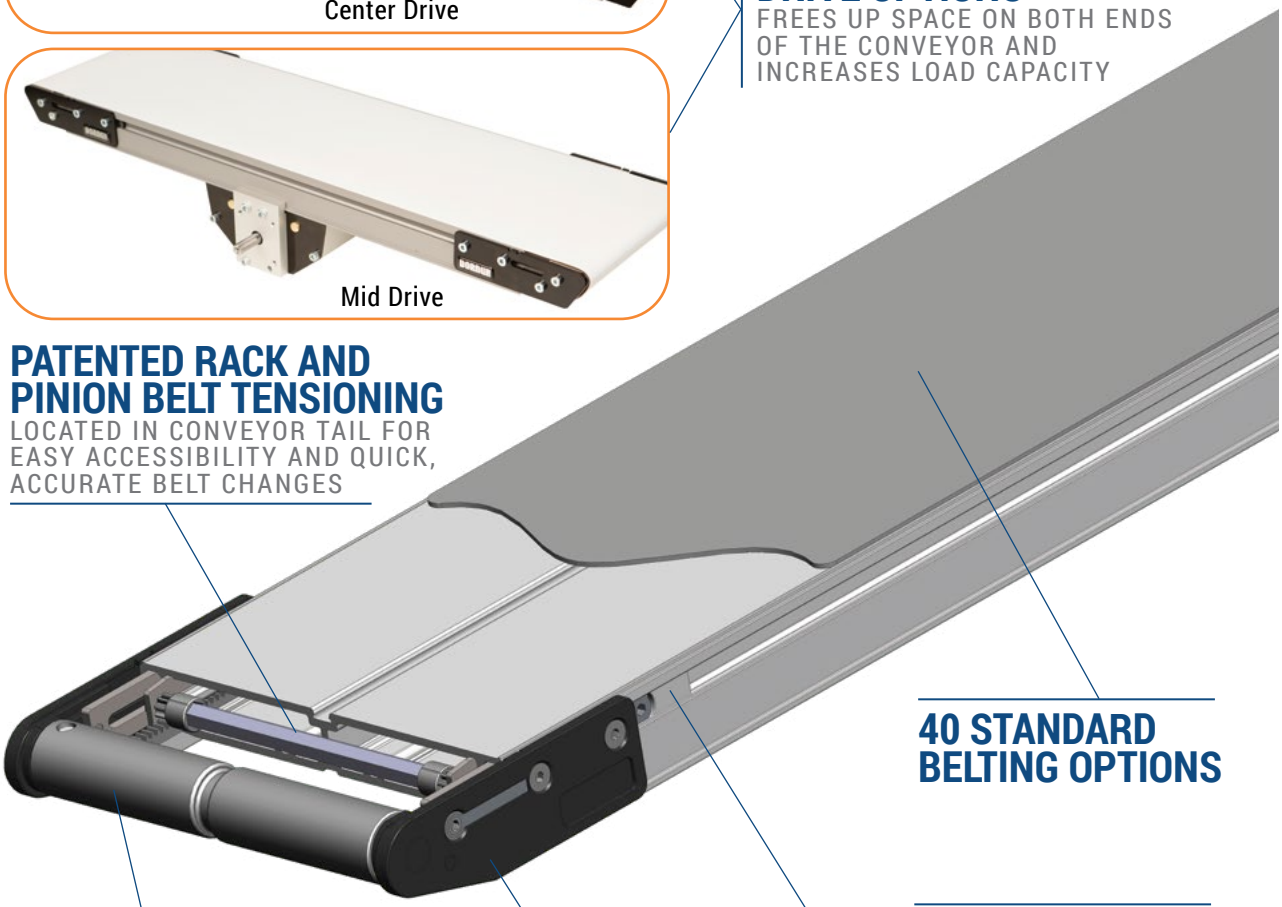

## PATENTED RACK AND PINION BELT TENSIONING

LOCATED IN CONVEYOR TAIL FOR EASY ACCESSIBILITY AND QUICK, ACCURATE BELT CHANGES

## 40 STANDARD BELTING OPTIONS

## VARIETY OF GUIDING OPTIONS

## SPHERICAL, SEALED BALL BEARINGS

FOR LONG, MAINTENANCE FREE LIFE

## TAIL PLATES

MINIMAL LENGTH TAIL PLATES FOR MAXIMUM T-SLOT EXPOSURE

## PRECISE CAM TRACKING

FOR FINE ADJUSTMENTS OF NON V-GUIDED BELTS

## 5/8" & 5/16" NOSEBAR TAIL OPTIONS

FOR SMALL PART TRANSFERS

## Specifications

- Loads up to 36 kg (80 lbs)*
- Belt speeds up to 122 m/min (400 ft/min)
- Belt widths: 44 to 610 mm (1.75 to 24 in)
- Conveyor lengths: 457 to 5,486 mm (18 in to 18 ft)
- 32 mm (1.25 in) diameter drive and idler pulleys turn approximately 107 mm (4.2 in) of belt per revolution
- V-groove bedplate with guided belt provides belt tracking, even under demanding side load applications
  - Cam tracking standard on Non V-Guided belt conveyors
- 12 mm diameter integral drive shaft with auxiliary shaft location options

**OPTIONAL:**
**16 mm (5/8 in) High Speed Nose Bar Transfer Tail**

Available at non-driven end.
V-guide supported.
Speeds up to 61 m/min (200 ft/min)

**OPTIONAL:**
**8 mm (5/16 in) Nose Bar Transfer Tail**

Available at non-driven end.
Speeds up to 22 m/min (75 ft/min)

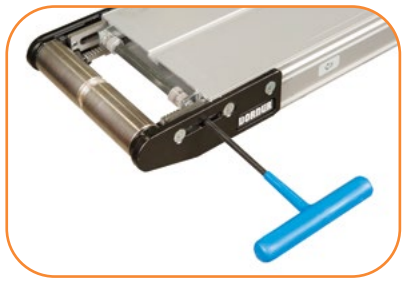

**STANDARD FEATURE:**
**Rack and Pinion**

Allows the tail section to be easily slid back for quick belt adjustments and removal

**2200 Series Flat Belt End Drive Conveyor**

22 E D M W W - L L L L 1 0 A P P P P B B - X $T^1$ $T^2$ $T^3$ $T^4$

- **Conveyor Tail Options X** (if required) *See Drive Shaft Position Chart on next page
  - **A or B** = Drive Shaft ($T^1$ only) **C or D** = Drive Shaft ($T^2$ only)
  - **O** = No Shaft **K** = Keyed Auxiliary Shaft
  - **S** = Stub Shaft **M** = Magnet Location ($T^3$ or $T^4$ only)
- **Belt Type**
- **Profile (D side)**
- **Profile (A side)**
- **Flow/Drive Shaft Position: A, B, C or D**
- **Idler Tail Type: 0** = Standard 32 mm (1.25 in), **3** = Nose Bar 8 mm (5/16 in), **5** = Nose Bar 16 mm (5/8 in)
- **V-Guide & Mounting Bracket Options:**
  - **1** = Non V-Guided Belt, includes mounting brackets and return rollers
  - **2** = V-Guided Belt, includes mounting brackets and return rollers
  - **3** = Non V-Guided Belt, without mounting brackets and return rollers
  - **4** = V-Guided Belt, without mounting brackets and return rollers
  - **5** = Non V-Guided Belt, without mounting brackets, includes return rollers
  - **6** = V-Guided Belt, without mounting brackets, includes return rollers
- **Conveyor Length Reference:** LL.LL in feet
- **Conveyor Width Reference**
- **Documentation Language: M** = US, **U** = Europe

* Conveyor load capacity depends on conveyor size, incline, motor position, accumulated loads and other factors.

Order gearmotor mounting packages and gearmotors separately, see pages 73-78
For support stands and accessories, see pages 90-95

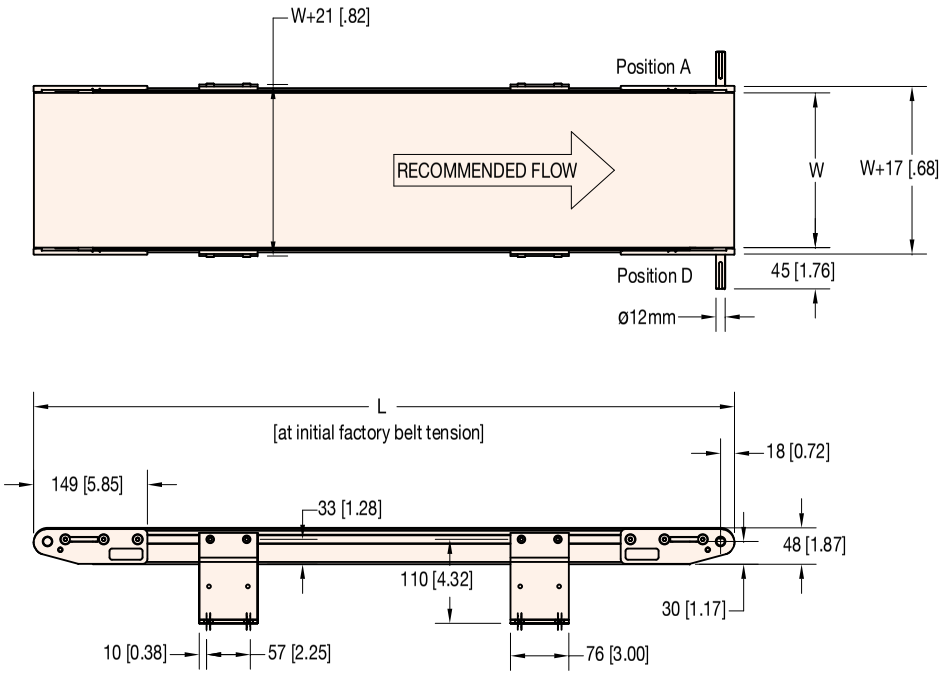


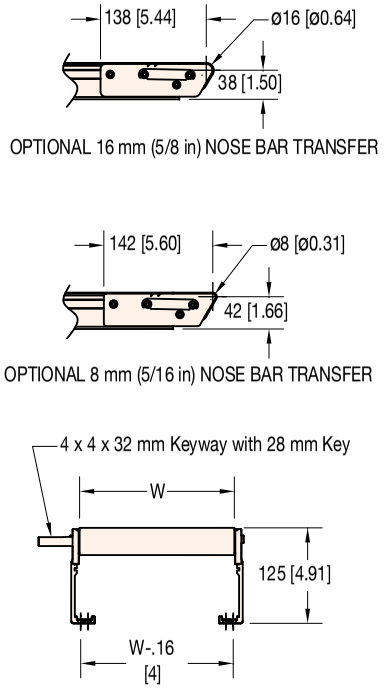


**W** = Conveyor Belt Width **Dim** = mm (in)

| STANDARD SIZES | | | | | | | | | | | | | | |
|---|---|---|---|---|---|---|---|---|---|---|---|---|---|---|
| **Conveyor Width Reference** | 02 | 03 | 04 | 05 | 06 | 08 | 10 | 12 | 14 | 16 | 18 | 20 | 22 | 24 |
| **Conveyor Belt Width (W)** | 44 mm (1.75 in) | 70 mm (2.75 in) | 95 mm (3.75 in) | 127 mm (5 in) | 152 mm (6 in) | 203 mm (8 in) | 254 mm (10 in) | 305 mm (12 in) | 356 mm (14 in) | 406 mm (16 in) | 457 mm (18 in) | 508 mm (20 in) | 559 mm (22 in) | 610 mm (24 in) |
| **Conveyor Length Reference** | 0150 | | 0001 increments **up to...** | | | | | | | | | | 1800 | |
| **Conveyor Length (L)** | 457 mm (1.5 ft) | | 3 mm (0.12 in) increments **up to...** | | | | | | | | | | 5,486 mm (18 ft)* | |

**NOTE:** Conveyor widths 44-127 mm (1.75 to 5 in) wide available to 3657 mm (144 in) long only.
**NOTE:** Conveyor longer than 3,658 mm (12 ft) will be constructed using two equal length frames.
***NOTE:** Max length varies based on tail section.

**DRIVE SHAFT POSITION**

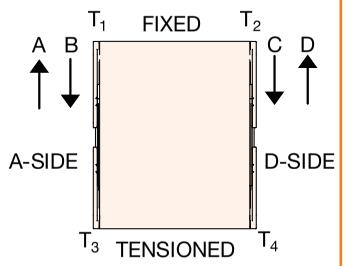


Since belts are being pulled, positions A & D are preferred. Pushing belts (B & C) reduce conveyor load capacity by approximately 66%.

Center Drive

**OPTIONAL:**
**Compact Mid Drive**
Small footprint to fit in tight spaces

## Specifications

- Loads up to 54 kg (120 lbs)* (Center Drive)
  Loads up to 36 kg (80 lbs)* (Mid Drive)
- Belt speeds up to 122 m/min (400 ft/min)
- Belt widths: 44 to 610 mm (1.75 to 24 in)
- Conveyor lengths: 457 to 7,315 mm (18 to 288 in)
- 32 mm (1.25 in) diameter drive and idler pulleys turn approximately 107 mm (4.2 in) of belt per revolution
- V-groove bedplate with guided belt provides belt tracking, even under demanding side load applications
  - Cam tracking standard on Non V-Guided belt conveyors
- 12 mm diameter integral drive shaft with auxiliary shaft location options

**OPTIONAL: 16 mm (5/8 in) High Speed Nose Bar Transfer Tail**

Available at non-driven end. V-guide supported.
Speeds up to 61 m/min (200 ft/min)

**OPTIONAL: 8 mm (5/16 in) Nose Bar Transfer Tail**

Available at non-driven end.
Speeds up to 22 m/min (75 ft/min)

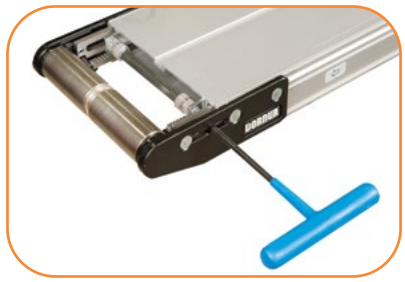

**STANDARD FEATURE: Rack and Pinion**

Allows the tail section to be easily slid back for quick belt adjustments and removal

**2200 Series Flat Belt Mid/Center Drive Conveyor**

22 CD M WW - LLLL 1 0 0 A PP PP BB - X $T^1$ $T^2$ $T^3$ $T^4$

- **Conveyor Tail Options X** (if required) *See Drive Shaft Position Chart on next page
  - **O** = No Shaft
  - **S** = Stub Shaft
  - **K** = Keyed Auxiliary Shaft
  - **M** = Mag Location ($T^3$ or $T^4$ only)
- **Belt Type**
- **Profile (D side)**
- **Profile (A side)**
- **Center/Mid Drive Shaft Position:** **A** = A side, **D** = D side, **E** = Both sides
- **Tension Tail Type:** **0** = Standard 32 mm (1.25 in), **3** = Nose Bar 8 mm (5/16 in), **5** = Nose Bar 16 mm (5/8 in)
- **Fixed Tail Type:** **0** = Standard 32 mm (1.25 in), **3** = Nose Bar 8 mm (5/16 in), **5** = Nose Bar 16 mm (5/8 in)
- **V-Guide & Mounting Bracket Options:**
  - **1** = Non V-Guided Belt, includes mounting brackets and return rollers
  - **2** = V-Guided Belt, includes mounting brackets and return rollers
  - **3** = Non V-Guided Belt, without mounting brackets and return rollers
  - **4** = V-Guided Belt, without mounting brackets and return rollers
  - **5** = Non V-Guided Belt, without mounting brackets, includes return rollers
  - **6** = V-Guided Belt, without mounting brackets, includes return rollers
- **Conveyor Length Reference:** LL.LL in feet
- **Conveyor Width Reference**
- **Documentation Language:** **M** = US, **U** = Europe
- **Drive Type:** **CD** = Center Drive, **MD** = Mid Drive

* Conveyor load capacity depends on conveyor size, incline, motor position, accumulated loads and other factors.

Order gearmotor mounting packages and gearmotors separately, see pages 73-78
For support stands and accessories, see pages 90-95

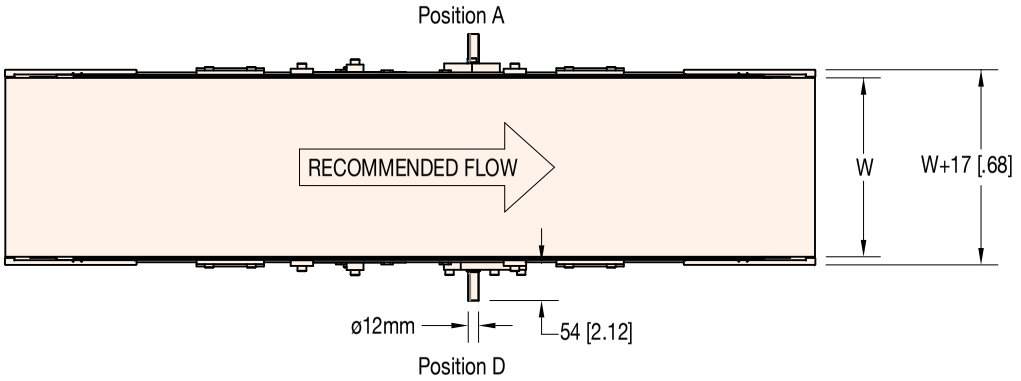


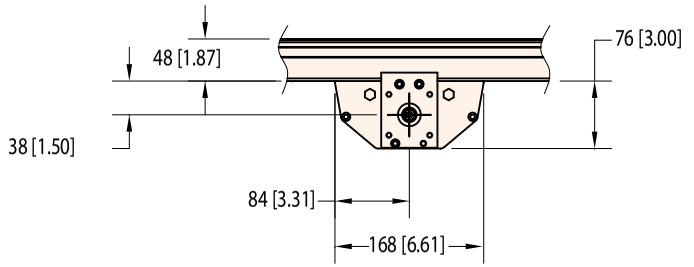


**Mid Drive**

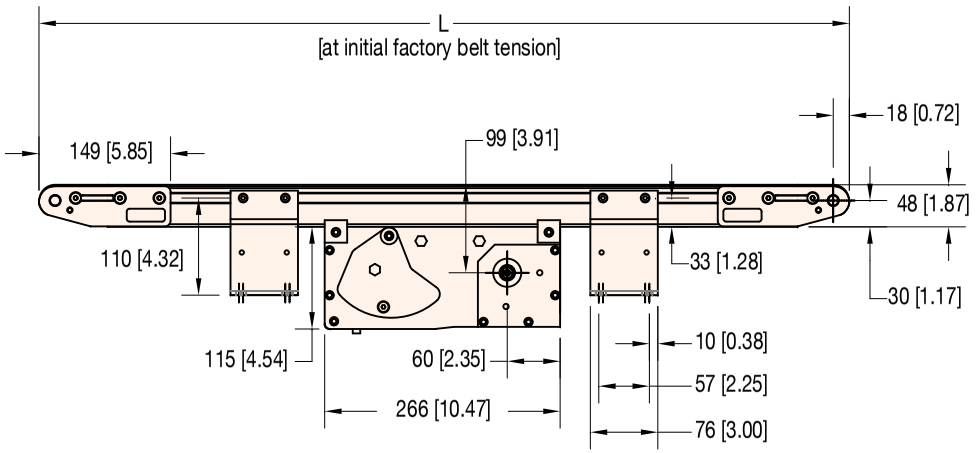


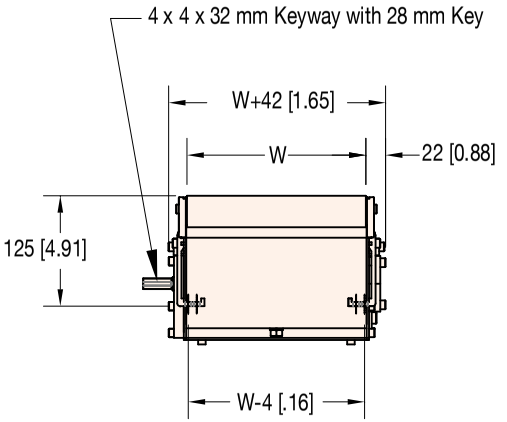


**W** = Conveyor Belt Width **Dim** = mm (in)

**DRIVE SHAFT POSITION**

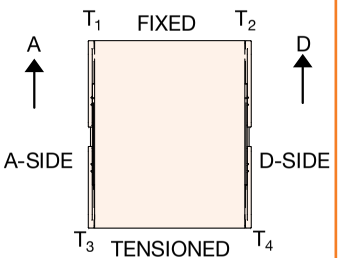


**STANDARD SIZES**

| | | | | | | | | | | | | | | |
|---|---|---|---|---|---|---|---|---|---|---|---|---|---|---|
| **Conveyor Width Reference** | 02 | 03 | 04 | 05 | 06 | 08 | 10 | 12 | 14 | 16 | 18 | 20 | 22 | 24 |
| **Conveyor Belt Width (W)** | 44 mm (1.75 in) | 70 mm (2.75 in) | 95 mm (3.75 in) | 127 mm (5 in) | 152 mm (6 in) | 203 mm (8 in) | 254 mm (10 in) | 305 mm (12 in) | 356 mm (14 in) | 406 mm (16 in) | 457 mm (18 in) | 508 mm (20 in) | 559 mm (22 in) | 610 mm (24 in) |
| **Conveyor Length Reference** | 0150 | | 0001 increments **up to...** | | | | | | | | | | 2400 | |
| **Conveyor Length (L)** | 457 mm (1.5 ft) | | 3 mm (0.12 in) increments **up to...** | | | | | | | | | | 7,315 mm (24 ft)* | |

**NOTE:** Conveyor widths 44-127 mm (1.75 to 5 in) wide available to 3657 mm (144 in) long only.
***NOTE:** Max length varies based on tail section.

## Specifications

- Loads up to 36 kg (80 lbs)*
- Belt speeds up to 122 m/min (400 ft/min)
- Belt widths: 44 to 610mm (1.75 to 24 in)
- Conveyor lengths: 457 to 5,486 mm (18 in to 18 ft)
- Cleats available from 6 to 60 mm to (0.24 to 2.36 in) high
- 32 mm (1.25 in) diameter drive and idler pulleys turn approximately 107 mm (4.2 in) of belt per revolution
- V-groove bedplate with guided belt provides belt tracking, even under demanding side load applications
  - Cam tracking standard on Non V-Guided belt conveyors
- 12 mm diameter integral drive shaft with auxiliary shaft location options

**OPTIONAL:**
**Fixed and Tension Tail Shafts and Sensor Accessories**

Easily allows for common driven applications or monitoring devices to be added

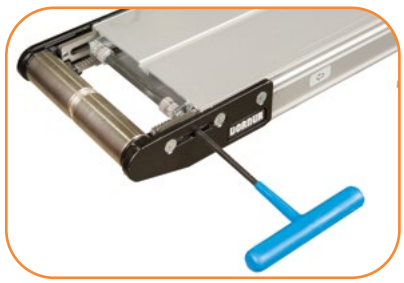

**STANDARD FEATURE:**
**Rack and Pinion**

Allows the tail section to be easily slid back for quick belt adjustments and removal

**2200 Series Cleated Belt End Drive Conveyor**

22 C T M WW - LLLL 1 A C P SSSS L - X $T^1$ $T^2$ $T^3$ $T^4$

- **Conveyor Tail Options X** (if required) *See Drive Shaft Position Chart on next page
  - **A or B** = Drive Shaft ($T^1$ only) **C or D** = Drive Shaft ($T^2$ only)
  - **O** = No Shaft **K** = Keyed Auxiliary Shaft
  - **S** = Stub Shaft **M** = Mag Location ($T^3$ or $T^4$ only)
- **Belt Type: L** = Low Friction Belt, **H** = Standard Belt
- **Cleat Spacing: SS.SS in inches**
- **Profile Type**
- **Cleat Type**
- **Flow/Drive Shaft Position: A, B, C or D**
- **V-Guide & Mounting Bracket Options:**
  - **1** = Non V-Guided Belt, includes mounting brackets and return rollers
  - **2** = V-Guided Belt, includes mounting brackets and return rollers
  - **3** = Non V-Guided Belt, without mounting brackets and return rollers
  - **4** = V-Guided Belt, without mounting brackets and return rollers
  - **5** = Non V-Guided Belt, without mounting brackets, includes return rollers
  - **6** = V-Guided Belt, without mounting brackets, includes return rollers
- **Conveyor Length Reference:** LL.LL in feet
- **Conveyor Width Reference**
- **Documentation Language: M** = US, **U** = Europe

* Conveyor load capacity depends on conveyor size, incline, motor position, accumulated loads and other factors.

Order gearmotor mounting packages and gearmotors separately, see pages 73-78
For support stands and accessories, see pages 90-95

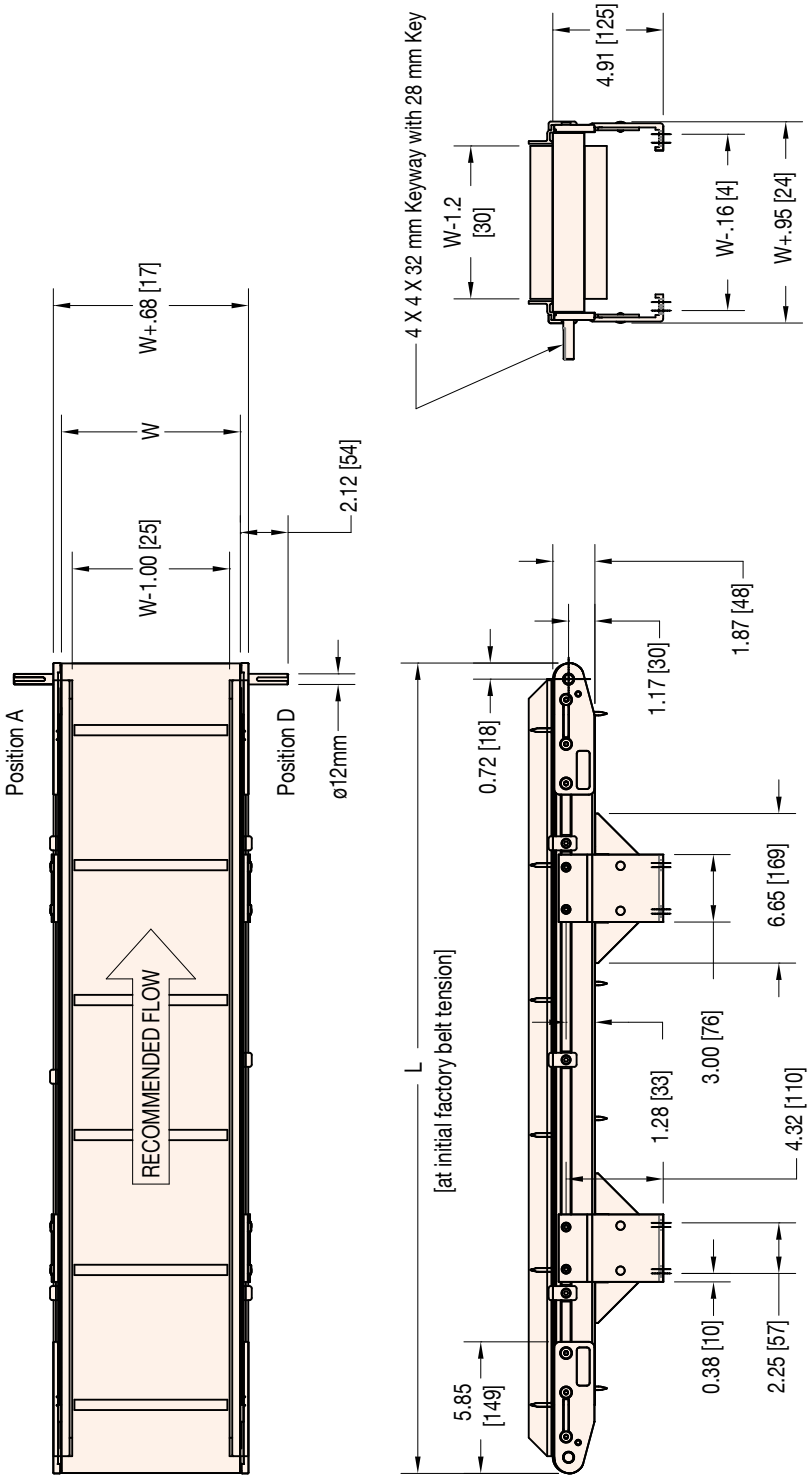


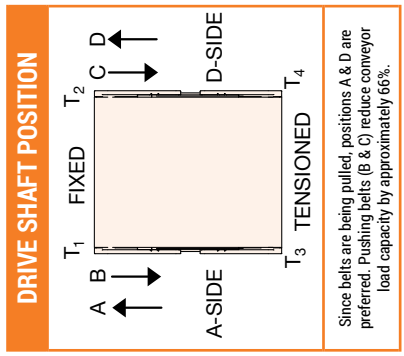


**W** = Conveyor Belt Width **Dim** = mm (in)

| STANDARD SIZES | | | | | | | | | | | | | | | |
|---|---|---|---|---|---|---|---|---|---|---|---|---|---|---|---|
| **Conveyor Width Reference** | 02 | 03 | 04 | 05 | 06 | 08 | 10 | 12 | 14 | 16 | 18 | 20 | 22 | 24 |
| **Conveyor Belt Width (W)** | 44 mm (1.75 in) | 70 mm (2.75 in) | 95 mm (3.75 in) | 127 mm (5 in) | 152 mm (6 in) | 203 mm (8 in) | 254 mm (10 in) | 305 mm (12 in) | 356 mm (14 in) | 406 mm (16 in) | 457 mm (18 in) | 508 mm (20 in) | 559 mm (22 in) | 610 mm (24 in) |
| **Conveyor Length Reference** | 0150 | | | 0001 increments **up to...** | | | | | | | | | 1800 | |
| **Conveyor Length (L)** | 457 mm (1.5 ft) | | | 3 mm (0.12 in) increments **up to...** | | | | | | | | | 5,486 mm (18 ft) | |

**NOTE:** Conveyor widths 44-127 mm (1.75 to 5 in) wide available to 3657 mm (144 in) long only.
**NOTE:** Conveyors longer than 3,658 mm (12 ft) will be constructed using two equal length frames.

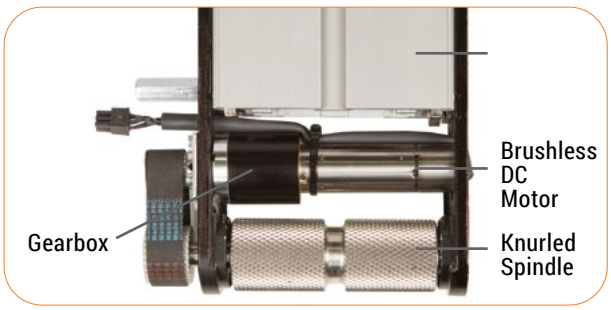


## Specifications

- Conveyor Load Capacity (non-accumulated, distributed load):
  - 0.5 to 5 m/min (1.7 to 17 ft/min) – Up to 11.3 kg (25 lbs)
  - 0.9 to 7 m/min (3 to 24 ft/min) – Up to 11.3 kg (25 lbs)
  - 1.5 to 15 m/min (5 to 50 ft/min) – Up to 11.3 kg (25 lbs)
  - 2 to 21 m/min (7 to 70 ft/min) – Up to 5.4 kg (12 lbs)
- Belt Speeds: Variable Speed, (4) Speed Options
  - 0.5 to 5 m/min (1.7 to 17 ft/min)
  - 0.9 to 7 m/min (3 to 24 ft/min)
  - 1.5 to 15 m/min (5 to 50 ft/min)
  - 2 to 21 m/min (7 to 70 ft/min)
- Belt Widths: 51 to 610 mm (2 to 24 in)
- Conveyor Lengths: 457 to 2,438 mm) (18 in to 8 ft)
- V-groove bedplate with guided belt provides belt tracking, even under demanding side load applications
  - Cam tracking standard on Non V-Guided belt conveyors
- Indexing Capable – Up to 30 indexes per minute
- iDrive Controls
  - Integrated Forward/Off/Reverse switch and variable speed pot
  - Flying leads remote start/stop with integrated direction switch and speed pot.
  - Power supply available

**2200 Series Flat Belt iDrive Conveyor**

22 E D M W W - L L L L 1 0 A P P P P B B - F D C P S

- **Speed Range:** **A** = 7-70 FPM, **B** = 5-50 FPM, **C** = 3-24 FPM, **D** = 1.7-17 FPM
- **Power Supply:** **P** = Power Supply Included, **N** = No Power Supply
- **Control Type:** **M** = Mounted Full Control, **Q** = Remote Start/Stop w/6' cord, **R** = Remote Start/Stop w/9 m (30ft) cord
- **Integrated Frame Drive**
- **Belt Type**
- **Profile (D side)**
- **Profile (A side)**
- **Controls/Flow/Drive Shaft Position:** **A, B, C or D**
- **Idler Tail Type:** **0** = Standard 32 mm (1.25 in), **3** = Nose Bar 8 mm (5/16 in), **5** = Nose Bar 16 mm (5/8 in)
- **V-Guide & Mounting Bracket Options:**
  - **1** = Non V-Guided Belt, includes mounting brackets and return rollers
  - **2** = V-Guided Belt, includes mounting brackets and return rollers
  - **3** = Non V-Guided Belt, without mounting brackets and return rollers
  - **4** = V-Guided Belt, without mounting brackets and return rollers
  - **5** = Non V-Guided Belt, without mounting brackets, includes return rollers
  - **6** = V-Guided Belt, without mounting brackets, includes return rollers
- **Conveyor Length Reference:** LL.LL in feet
- **Conveyor Width Reference**
- **Documentation Language:** **M** = US, **U** = Europe

**2200 Series Cleated Belt iDrive Conveyor**

22 C T M W W - L L L L 1 A C P S S S S L - F D C P S

- **Speed Range:** **A** = 7-70 FPM, **B** = 5-50 FPM, **C** = 3-24 FPM, **D** = 1.7-17 FPM
- **Power Supply:** **P** = Power Supply Included, **N** = No Power Supply
- **Control Type:** **M** = Mounted Full Control, **Q** = Remote Start/Stop w/6' cord, **R** = Remote Start/Stop w/9 m (30ft) cord
- **Integrated Frame Drive**
- **Belt Type:** **L** = Low Friction Belt, **H** = Standard Belt
- **Cleat Spacing:** SS.SS in inches
- **Profile Type**
- **Cleat Type**
- **Controls/Flow/Drive Shaft Position:** **A, B, C or D**
- **V-Guide & Mounting Bracket Options:**
  - **1** = Non V-Guided Belt, includes mounting brackets and return rollers
  - **2** = V-Guided Belt, includes mounting brackets and return rollers
  - **3** = Non V-Guided Belt, without mounting brackets and return rollers
  - **4** = V-Guided Belt, without mounting brackets and return rollers
  - **5** = Non V-Guided Belt, without mounting brackets, includes return rollers
  - **6** = V-Guided Belt, without mounting brackets, includes return rollers
- **Conveyor Length Reference:** LL.LL in feet
- **Conveyor Width Reference**
- **Documentation Language:** **M** = US, **U** = Europe

* Conveyor load capacity depends on conveyor size, incline, motor position, accumulated loads and other factors.

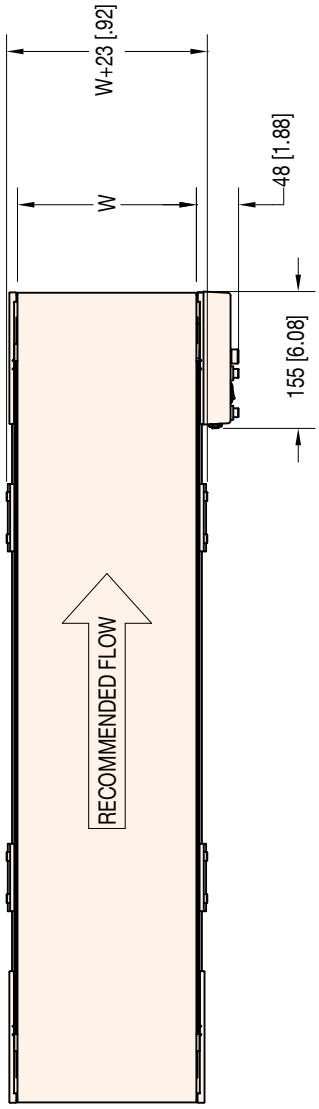


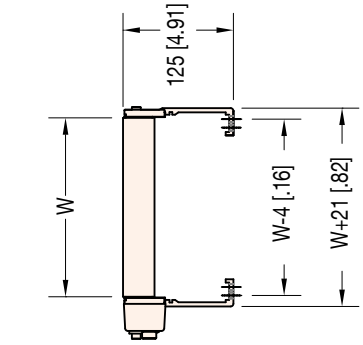


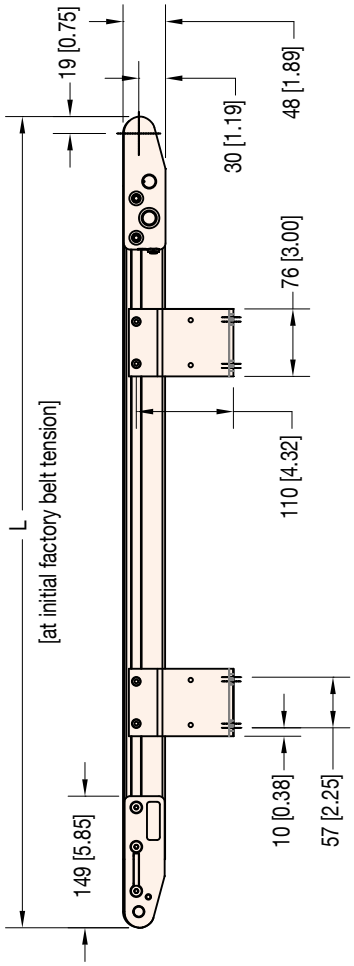


**DRIVE SHAFT POSITION**

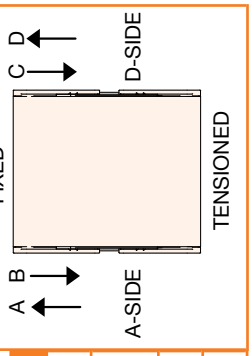


**W** = Conveyor Belt Width **Dim** = mm (in)

| STANDARD SIZES | | | | | | | | | | | | | | |
|---|---|---|---|---|---|---|---|---|---|---|---|---|---|---|
| **Conveyor Width Reference** | 02 | 03 | 04 | 05 | 06 | 08 | 10 | 12 | 14 | 16 | 18 | 20 | 22 | 24 |
| **Conveyor Belt Width (W)** | 44 mm (1.75 in) | 70 mm (2.75 in) | 95 mm (3.75 in) | 127 mm (5 in) | 152 mm (6 in) | 203 mm (8 in) | 254 mm (10 in) | 305 mm (12 in) | 356 mm (14 in) | 406 mm (16 in) | 457 mm (18 in) | 508 mm (20 in) | 559 mm (22 in) | 610 mm (24 in) |
| **Conveyor Length Reference** | 0150 | | | 0001 increments **up to...** | | | | | | | | | 0800 | |
| **Conveyor Length (L)** | 457 mm (1.5 ft) | | | 3 mm (0.12 in) increments **up to...** | | | | | | | | | 2,438 mm (8 ft)* | |

**NOTE:** Duty cycle not continuous rated.
**NOTE:** Conveyors longer than 3,658 mm (12 ft) will be constructed using two equal length frames.
***NOTE:** Max length varies based on tail section.

LPZ

## Specifications

- Loads up to 36 kg (80 lbs)*
- Belt speeds up to 76 m/min (250 ft/min)
- Belt widths: 44 to 610 mm (1.75 to 24 in)
- Conveyor lengths: 610 to 5,486 mm) (24 in to 18 ft)
- Fixed angle: 5˚, 10˚, 15˚, and 20˚
- 32 mm (1.25 in) diameter drive and idler pulleys turn approximately 107 mm (4.2 in) of belt per revolution
- V-groove bedplate with guided belt provides positive belt tracking, even under demanding side load applications

**Configurations**

Noseover

**OPTIONAL:**
**16 mm (5/8 in) High Speed Nose Bar Transfer Tail**

Available at non-driven end. V-guide supported. Speeds up to 61 m/min (200 ft/min)

**OPTIONAL:**
**Fixed and Tension Tail Shafts and Sensor Accessories**

Easily allows for common driven applications or monitoring devices to be added

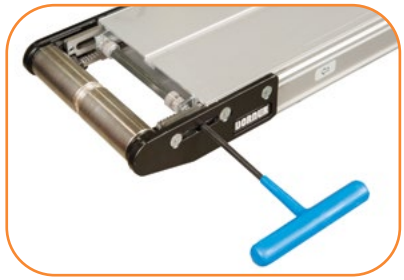

**STANDARD FEATURE:**
**Rack and Pinion**

Allows the tail section to be easily slid back for quick belt adjustments and removal

**2200 Series Z-Frame Flat Belt End Drive Conveyor**

22 E D M W W - L L L L - L L L L A A E 1 0 A P P B B - X $T^1$ $T^2$ $T^3$ $T^4$

- **Conveyor Tail Options X** (if required) *See Drive Shaft Position Chart on next page
  - **A or B** = Drive Shaft ($T^1$ only) **C or D** = Drive Shaft ($T^2$ only)
  - **O** = No Shaft **K** = Keyed Auxiliary Shaft
  - **S** = Stub Shaft **M** = Mag Location ($T^3$ or $T^4$ only)
- **Belt Type**
- **Profile**
- **Flow/Drive Shaft Position: A, B, C or D**
- **Idler Tail Type: 0** = Standard 32 mm (1.25 in), **5** = Nose Bar 16 mm (5/8 in)
- **V-Guide & Mounting Bracket Options:**
  - **1** = Non V-Guided Belt, includes mounting brackets and return rollers
  - **2** = V-Guided Belt, includes mounting brackets and return rollers
  - **3** = Non V-Guided Belt, without mounting brackets and return rollers
  - **4** = V-Guided Belt, without mounting brackets and return rollers
  - **5** = Non V-Guided Belt, without mounting brackets, includes return rollers
  - **6** = V-Guided Belt, without mounting brackets, includes return rollers
- **Belt Direction: E** = Incline **D** = Decline
- **Angle: 05** = 5°, **10** = 10°, **15** = 15°, **20** = 20°
- **Incline Section Length Reference:** LL.LL in feet
- **Horizontal Section Length Reference:** LL.LL in feet
- **Conveyor Width Reference**
- **Documentation Language: M** = US, **U** = Europe

* Conveyor load capacity depends on conveyor size, incline, motor position, accumulated loads and other factors.

Order gearmotor mounting packages and gearmotors separately, see pages 73-78
For support stands and accessories, see pages 90-95

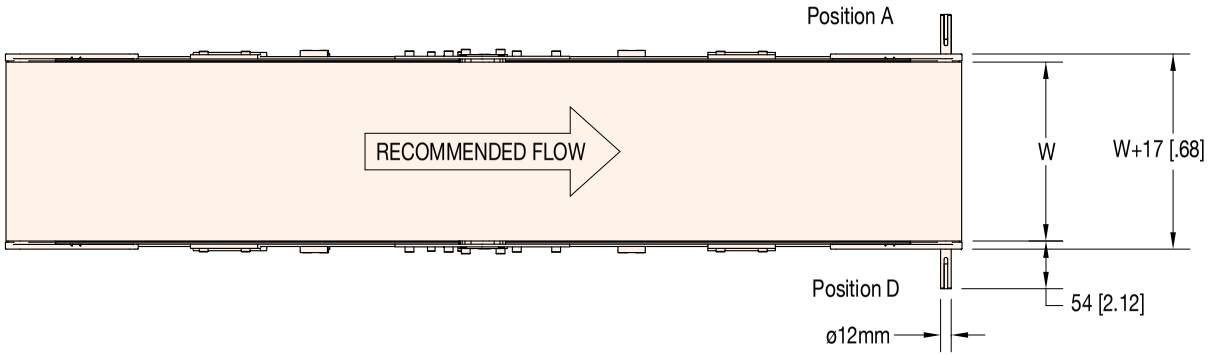


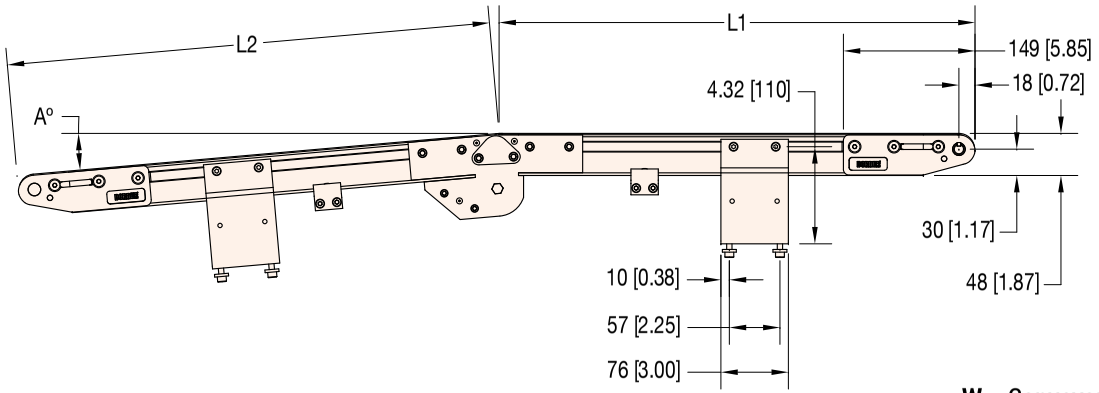


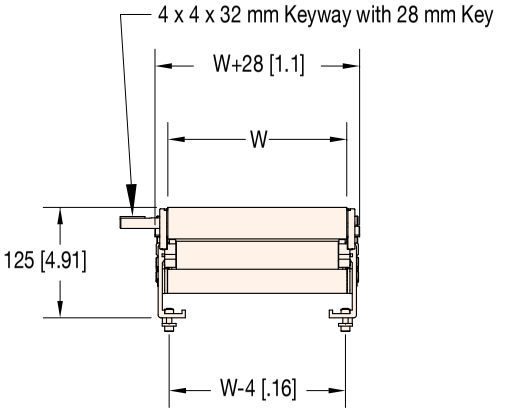


**W** = Conveyor Belt Width **Dim** = mm (in)
**Note:** Belt direction is not reversible

| STANDARD SIZES | | | | | | | | | | | | | | |
|---|---|---|---|---|---|---|---|---|---|---|---|---|---|---|
| **Conveyor Width Reference** | 02 | 03 | 04 | 05 | 06 | 08 | 10 | 12 | 14 | 16 | 18 | 20 | 22 | 24 |
| **Conveyor Belt Width (W)** | 44 mm (1.75 in) | 70 mm (2.75 in) | 95 mm (3.75 in) | 127 mm (5 in) | 152 mm (6 in) | 203 mm (8 in) | 254 mm (10 in) | 305 mm (12 in) | 356 mm (14 in) | 406 mm (16 in) | 457 mm (18 in) | 508 mm (20 in) | 559 mm (22 in) | 610 mm (24 in) |
| **Conveyor Length Reference** | 0200 | | | 0001 increments **up to...** | | | | | | | | | 1000 | |
| **Section Length (L1 or L2)** | 610 mm (2 ft) | | | 3 mm (0.12 in) increments **up to...** | | | | | | | | | 3048 mm (10 ft) | |
| **L1 + L2 Maximum Conveyor Length** | 3658mm (12 ft) | | | 5486 mm (18 ft)* | | | | | | | | | | |

***NOTE:** Max length varies based on tail section.

**DRIVE SHAFT POSITION**

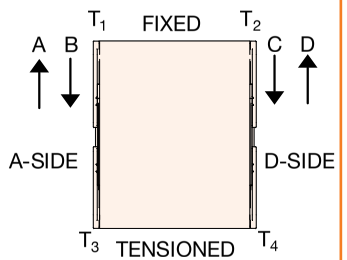


Since belts are being pulled, positions A & D are preferred. Pushing belts (B & C) reduce conveyor load capacity by approximately 66%.

LPZ

## Specifications

- Loads up to 23 kg (50 lbs)*
- Belt speeds up to 76 m/min (250 ft/min)
- Belt widths: 44 to 610 mm (6 to 24 in)
- Conveyor lengths: 610 to 5,486 mm (24 in to 18 ft)
- Fixed angle: 30˚, 45˚, and 60˚
- Cleats available from 6 to 60 mm (0.24 to 2.36 in) high
- 32 mm (1.25 in) diameter drive and idler pulleys turn approximately 107 mm (4.2 in) of belt per revolution
- V-groove bedplate with guided belt provides positive belt tracking, even under demanding side load applications

### Configurations

Horizontal to Incline  Noseover  Z-Frame

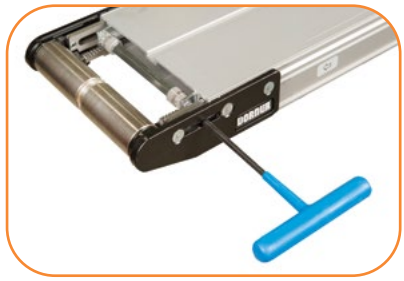

**STANDARD FEATURE:**
**Rack and Pinion**

Allows the tail section to be easily slid back for quick belt adjustments and removal

**2200 Series Z-Frame Cleated Belt End Drive Conveyor**

22 C T M WW - LLLL - LLLL - LLLL AA E 1 A C P SSSS - X $T^1$ $T^2$ $T^3$ $T^4$

- **Conveyor Tail Options X** (if required) *See Drive Shaft Position Chart on next page
  - **A or B** = Drive Shaft ($T^1$ only)
  - **C or D** = Drive Shaft ($T^2$ only)
  - **O** = No Shaft
  - **K** = Keyed Auxiliary Shaft
  - **S** = Stub Shaft
  - **M** = Mag Location ($T^3$ or $T^4$ only)
- **Cleat Spacing:** SS.SS in inches
- **Profile Type**
- **Cleat Type**
- **Flow/Drive Shaft Position:** **A, B, C or D**
- **V-Guide & Mounting Bracket Options:**
  - **1** = Non V-Guided Belt, includes mounting brackets and return rollers
  - **2** = V-Guided Belt, includes mounting brackets and return rollers
  - **5** = Non V-Guided Belt, without mounting brackets, includes return rollers
  - **6** = V-Guided Belt, without mounting brackets, includes return rollers
- **Belt Direction:** **E** = Incline **D** = Decline
- **Angle:** **30** = 30˚, **45** = 45˚, **60** = 60˚
- **L3 Section Length Reference:** LL.LL in feet
- **L2 Section Length Reference:** LL.LL in feet
- **L1 Section Length Reference:** LL.LL in feet
- **Conveyor Width Reference**
- **Documentation Language:** **M** = US, **U** = Europe

* Conveyor load capacity depends on conveyor size, incline, motor position, accumulated loads and other factors.

Order gearmotor mounting packages and gearmotors separately, see pages 73-78
For support stands and accessories, see pages 90-95

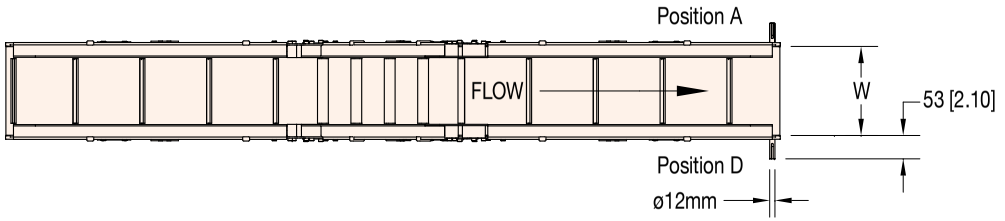


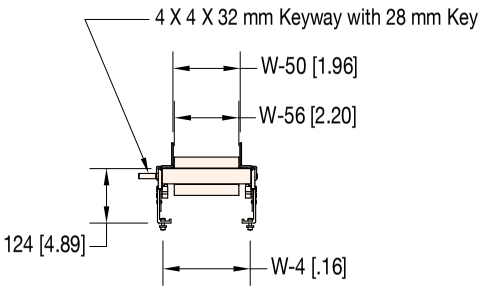


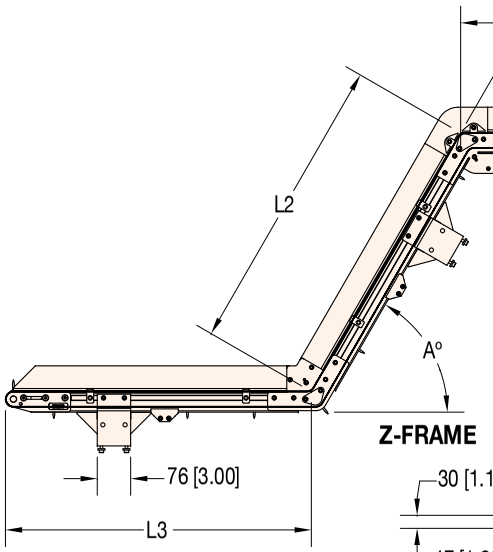


Z-FRAME

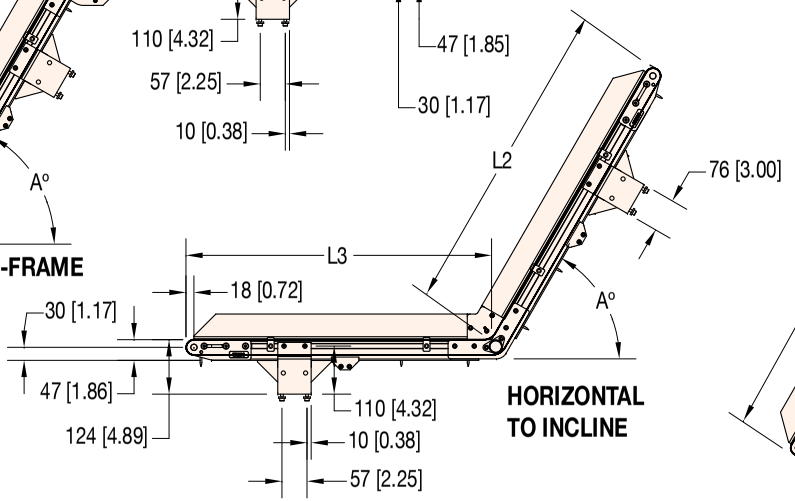


HORIZONTAL TO INCLINE

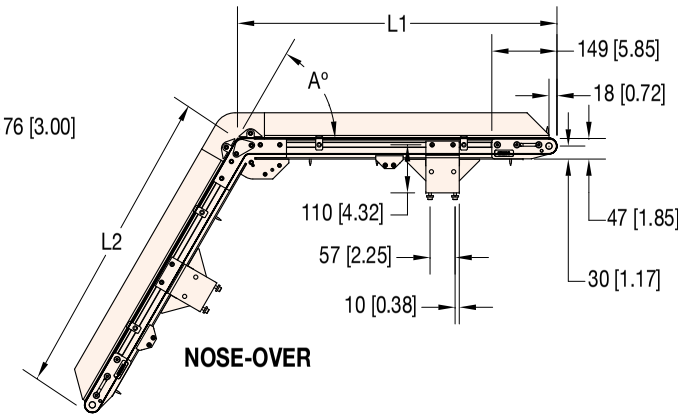


NOSE-OVER

**W** = Conveyor Belt Width **Dim** = mm (in)
**Note:** Belt direction is not reversible

| STANDARD SIZES | | | | | | | | | | |
|---|---|---|---|---|---|---|---|---|---|---|
| **Conveyor Width Reference** | 06 | 08 | 10 | 12 | 14 | 16 | 18 | 20 | 22 | 24 |
| **Conveyor Belt Width (W)*** | 152 mm (6 in) | 203 mm (8 in) | 254 mm (10 in) | 305 mm (12 in) | 356 mm (14 in) | 406 mm (16 in) | 457mm (18 in) | 508 mm (20 in) | 559 mm (22 in) | 610 mm (24 in) |
| **Pocket Width** | 102 mm (4 in) | 152 mm (6 in) | 203 mm (8 in) | 254 mm (10 in) | 305 mm (12 in) | 356 mm (14 in) | 406 mm (16 in) | 457mm (18 in) | 508 mm (20 in) | 559 mm (22 in) |
| **Conveyor Length Reference** | 0200 | | 0001 increments **up to...** | | | | | | 1000 | |
| **Section Length (L1, L2, or L3)** | 610 mm (2 in) | | 3 mm (0.12 in) increments **up to...** | | | | | | 3048 mm (10 ft)** | |
| **L1 + L2 + L3 Maximum Conveyor Length** | 5486 mm (18 ft) | | | | | | | | | |

***Note:** 30 deg knuckles available for 152 - 406 mm (6 - 16 in) belt widths only
****NOTE:** Max length varies based on tail section.

**DRIVE SHAFT POSITION**

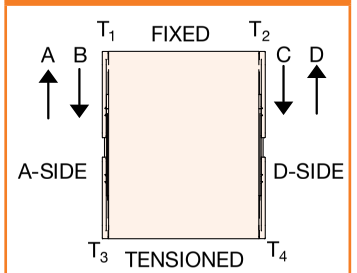


Since belts are being pulled, positions A & D are preferred. Pushing belts (B & C) reduce conveyor load capacity by approximately 66%.

## IDrive2 CONTINUOUS DUTY 24VDC MOTORS

THE MOST COMPACT CONVEYOR DRIVE PACKAGE. INTERNAL GEARMOTOR ALLOWS THE CONVEYOR TO FIT IN TIGHT SPACES

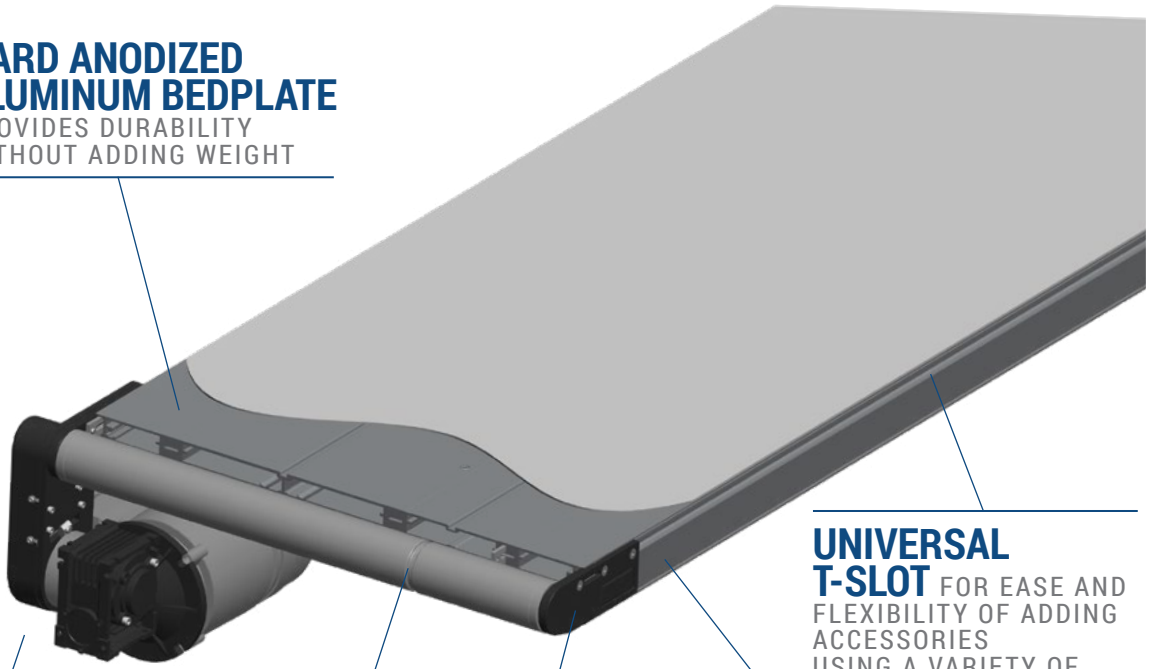

## HARD ANODIZED ALUMINUM BEDPLATE

PROVIDES DURABILITY WITHOUT ADDING WEIGHT

## UNIVERSAL T-SLOT

FOR EASE AND FLEXIBILITY OF ADDING ACCESSORIES USING A VARIETY OF INDUSTRY AVAILABLE HARDWARE

## MOTOR MOUNT PACKAGES

VARIETY OF CONFIGURATIONS PROVIDES THE FLEXIBILITY TO SELECT THE EXACT PRODUCT FOR THE APPLICATION

## STANDARD PRECISE CAM TRACKING

FOR FINE ADJUSTMENTS OF NON V-GUIDED BELTS

## SMALL CONVEYOR FRAME HEIGHT WITH LARGE BEARINGS

MAKING THIS CONVEYOR COMPACT WHILE ABLE TO HANDLE LARGE LOADS

## V-GROOVED BEDPLATE AND V-GUIDED BELTS

PROVIDE MAINTENANCE-FREE BELT TRACKING AND ALLOW CONVEYOR TO BE WIDER THAN LONG FOR AGV/ARM APPLICATIONS

## AUXILIARY SHAFT

ADDITIONAL SHAFTS ON ANY CORNER OF THE CONVEYOR FOR EASY INTEGRATION OF SENSORS OR ATTACHMENTS

## MID DRIVE OPTION
FREES UP SPACE ON BOTH ENDS OF THE CONVEYOR

## PATENTED RACK AND PINION BELT TENSIONING
LOCATED IN CONVEYOR TAIL FOR EASY ACCESSIBILITY AND QUICK, ACCURATE BELT CHANGES

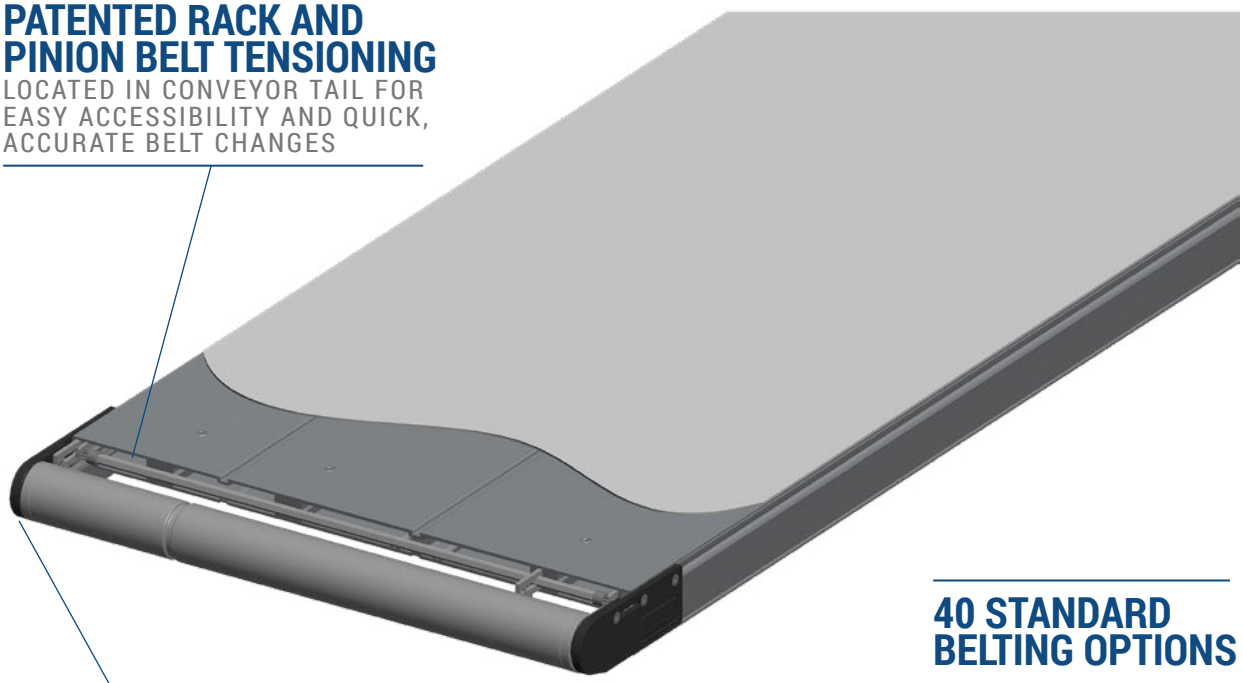

## 40 STANDARD BELTING OPTIONS

## LARGE CAPACITY, SEALED BALL BEARINGS
FOR LONG, MAINTENANCE FREE LIFE

## TAIL PLATES
MINIMAL LENGTH TAIL PLATES FOR MAXIMUM T-SLOT EXPOSURE

## VARIETY OF GUIDING OPTIONS

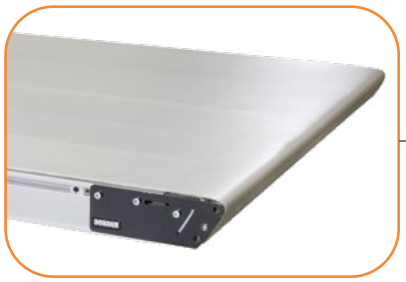

## 5/8" NOSEBAR TAIL OPTIONS
FOR PRECISE SMALL PART TRANSFER

## Specifications

- Loads up to 68 kg (150 lbs)*
- Belt speeds up to 122 m/min (400 ft/min)
- Belt widths: 203 to 914 mm (8 to 36 in)
- Conveyor lengths: 508 to 7315 mm (20 in to 24 ft)
- 60 mm (2.4 in) diameter drive and idler pulleys turn approximately 189 mm (7.4 in) of belt per revolution
- V-groove bedplate with guided belt provides belt tracking, even under demanding side load applications
  - Cam tracking standard on Non V-Guided belt conveyors
- 15 mm diameter integral drive shaft with auxiliary shaft location options

**OPTIONAL:**
**16 mm (5/8 in) High Speed Nose Bar Transfer Tail**

Available at non-driven end.
V-guide supported.
Speeds up to 61 m/min (200 ft/min)

**OPTIONAL:**
**15 mm diameter integrated auxiliary shaft**

Available on any corner of the conveyor

**STANDARD FEATURE:**
**Rack and Pinion**

Allows the tail section to be easily slid back for quick belt adjustments and removal

**2700 Series Flat Belt End Drive Conveyor**

2 L E D M W W - L L L L 1 0 A P P P P B B - X $T^1$ $T^2$ $T^3$ $T^4$

- **Conveyor Tail Options X** (if required) **O** = No Shaft, **K** = Keyed Auxiliary Shaft
- **Belt Type See Note**
- **Profile (D side)**
- **Profile (A side) See Pages 34-37**
- **Drive Shaft Position: A, B, C or D**
- **Idler Tail Type: 0** = Standard 60 mm (2.4 in), **5** = Nose Bar 16 mm (5/8 in)
- **V-Guide & Mounting Bracket Options:**
  - **1** = Non V-Guide belt, conveyor to include mounting brackets & return roller
  - **2** = V-Guide belt, conveyor to include mounting brackets & return rollers
  - **3** = Non V-Guide belt, conveyor NOT to include mounting brackets & no return rollers
  - **4** = V-Guide belt, conveyor NOT to include mounting brackets & no return rollers
  - **5** = Non V-Guide belt, conveyor NOT to include mounting brackets, with return rollers
  - **6** = V-Guide belt, conveyor NOT to include mounting brackets, with return rollers
- **Conveyor Length Reference:** 0170 to 2400 in 0001 foot increments
- **Conveyor Width Reference:** 8 to 36 in inches
- **Documentation Language: M** = US English, **U** = Europe English, **D** = German, **F** = French, **S** = Spanish
- **Prefix: 2L** = 2700 Series Belted, **ED** = End Drive Flat Belt

* Conveyor load capacity depends on conveyor size, incline, motor position, accumulated loads and other factors.

Order gearmotor mounting packages and gearmotors separately, see pages 73-78
For support stands and accessories, see pages 90-95

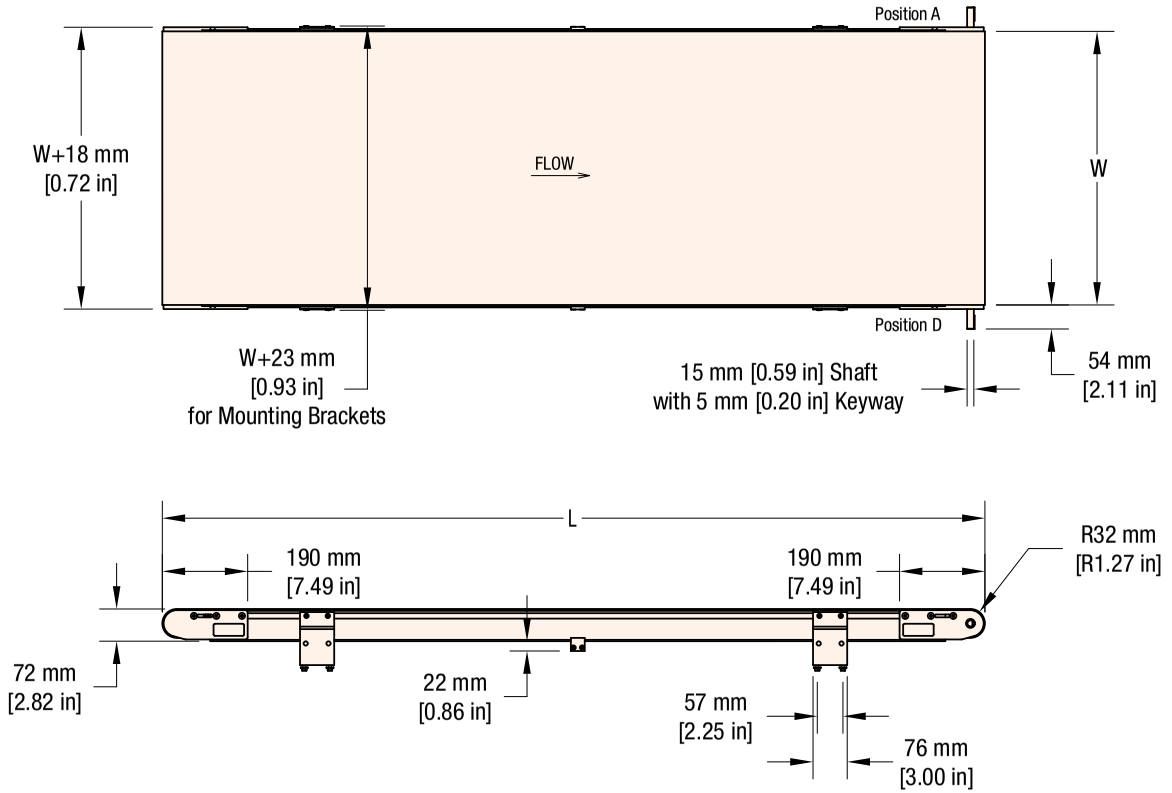


## DRIVE SHAFT POSITION

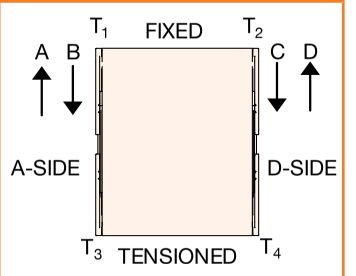


Since belts are being pulled, positions A & D are preferred. Pushing belts (B & C) reduce conveyor load capacity by approximately 66%.

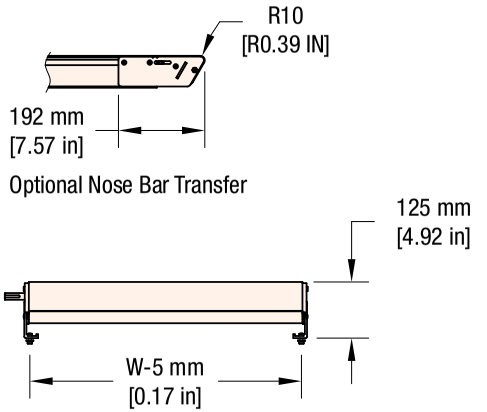


**W** = Conveyor Belt Width **Dim** = mm (in)

| STANDARD SIZES | | | | | | | | | | | | | | | |
|---|---|---|---|---|---|---|---|---|---|---|---|---|---|---|---|
| **Conveyor Width Reference** | 08 | 10 | 12 | 14 | 16 | 18 | 20 | 22 | 24 | 26 | 28 | 30 | 32 | 34 | 36 |
| **Conveyor Belt Width (W)** | 203 mm (8 in) | 254 mm (10 in) | 305 mm (12 in) | 356 mm (14 in) | 406 mm (16 in) | 457 mm (18 in) | 508 mm (20 in) | 559 mm (22 in) | 610 mm (24 in) | 660 mm (26 in) | 711 mm (28 in) | 762 mm (30 in) | 813 mm (32 in) | 864 mm (34 in) | 914 mm (36 in) |
| **Conveyor Length Reference** | 0170 | | 0001 increments **up to...** | | | | | | | | | | | 2400 | |
| **Conveyor Length (L)** | 508 mm (1.7 ft) | | 3 mm (0.12 in) increments **up to...** | | | | | | | | | | | 7,315 mm (24 ft) | |

**NOTE:** Conveyor longer than 3,658 mm (12 ft) will be constructed using two equal length frames.
***NOTE:** Max length varies based on tail section.

## Specifications

- Loads up to 68 kg (150 lbs)*
- Belt speeds up to 122 m/min (400 ft/min)
- Belt widths: 203 to 914 mm (8 to 36 in)
- Conveyor lengths: 610 to 7315 mm (24 in to 24 ft)
- 60 mm (2.4 in) diameter drive and idler pulleys turn approximately 189 mm (7.4 in) of belt per revolution
- V-groove bedplate with guided belt provides belt tracking, even under demanding side load applications
  - Cam tracking standard on Non V-Guided belt conveyors
- 15 mm diameter integral drive shaft with auxiliary shaft location options

**OPTIONAL:**
**16 mm (5/8 in) High Speed Nose Bar Transfer Tail**

Available at non-driven end.
V-guide supported.
Speeds up to 61 m/min (200 ft/min)

**STANDARD FEATURE:**
**Rack and Pinion**

Allows the tail section to be easily slid back for quick belt adjustments and removal

**2700 Series Flat Belt Mid Drive Conveyor**

2 L M D M W W - L L L L 1 0 0 A P P P P B B - X T[1] T[2] T[3] T[4]

- **Conveyor Tail Options X** (if required) **O** = No Shaft, **K** = Keyed Auxiliary Shaft
- **Belt Type See Note**
- **Profile (D side)**
- **Profile (A side) See Pages 34-37**
- **Shaft Position: A** = A side, **D** = D side, **E** = Both sides
- **Tension Tail Type: 0** = Standard 60 mm (2.4 in), **5** = Nose Bar 16 mm (5/8 in)
- **Fixed Tail Type: 0** = Standard 60 mm (2.4 in), **5** = Nose Bar 16 mm (5/8 in)
- **V-Guide & Mounting Bracket Options:**
  - **1** = Non V-Guide belt, conveyor to include mounting brackets & return roller
  - **2** = V-Guide belt, conveyor to include mounting brackets & return rollers
  - **3** = Non V-Guide belt, conveyor NOT to include mounting brackets & no return rollers
  - **4** = V-Guide belt, conveyor NOT to include mounting brackets & no return rollers
  - **5** = Non V-Guide belt, conveyor NOT to include mounting brackets, with return rollers
  - **6** = V-Guide belt, conveyor NOT to include mounting brackets, with return rollers
- **Conveyor Length Reference:** 0200 to 2400 in 0001 ft increments
- **Conveyor Width Reference:** 8 to 36 in inches
- **Documentation Language: M** = US English, **U** = Europe English, **D** = German, **F** = French, **S** = Spanish
- **Prefix: 2L** = 2700 Series Belted, **MD** = Mid Drive Flat Belt

* Conveyor load capacity depends on conveyor size, incline, motor position, accumulated loads and other factors.

Order gearmotor mounting packages and gearmotors separately, see pages 73-78
For support stands and accessories, see pages 90-95

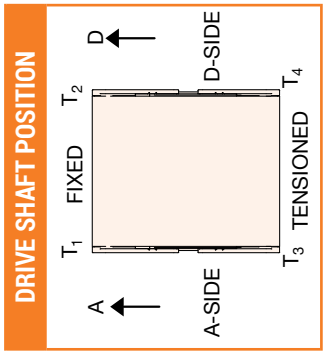


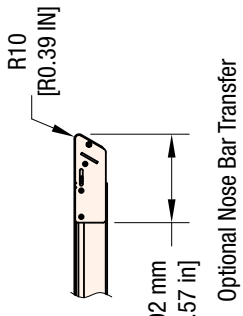


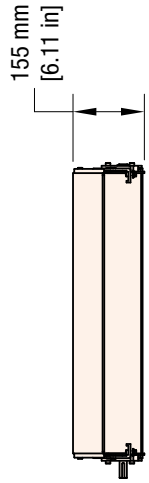


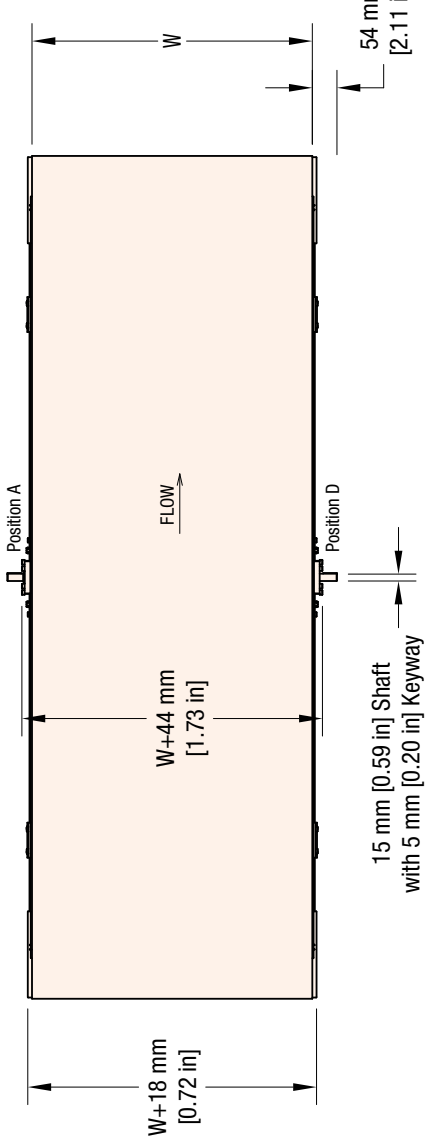


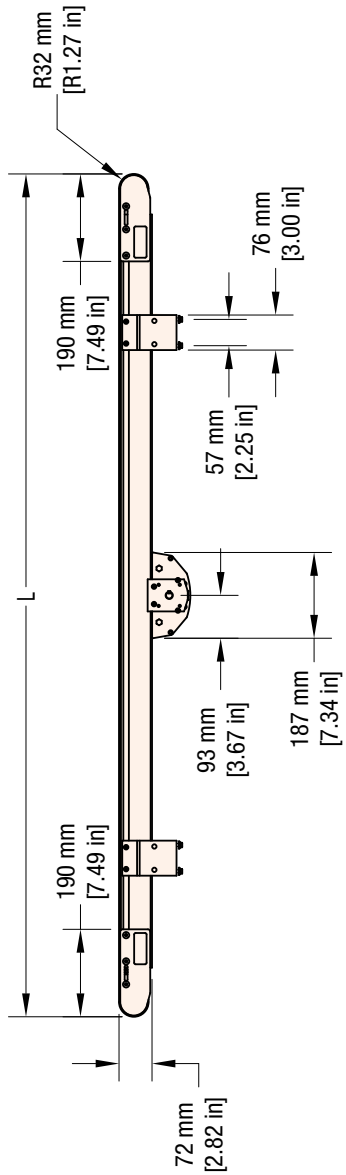


**W** = Conveyor Belt Width **Dim** = mm (in)

| STANDARD SIZES | | | | | | | | | | | | | | | |
|---|---|---|---|---|---|---|---|---|---|---|---|---|---|---|---|
| **Conveyor Width Reference** | 08 | 10 | 12 | 14 | 16 | 18 | 20 | 22 | 24 | 26 | 28 | 30 | 32 | 34 | 36 |
| **Conveyor Belt Width (W)** | 203 mm (8 in) | 254 mm (10 in) | 305 mm (12 in) | 356 mm (14 in) | 406 mm (16 in) | 457 mm (18 in) | 508 mm (20 in) | 559 mm (22 in) | 610 mm (24 in) | 660 mm (26 in) | 711 mm (28 in) | 762 mm (30 in) | 813 mm (32 in) | 864 mm (34 in) | 914 mm (36 in) |
| **Conveyor Length Reference** | 0200 | | | | | | 0001 increments **up to...** | | | | | | | 2400 | |
| **Conveyor Length (L)** | 610 mm (2.0 ft) | | | | | | | | | | | | | 7,315 mm (24 ft) | |

***NOTE:** Max length varies based on tail section.

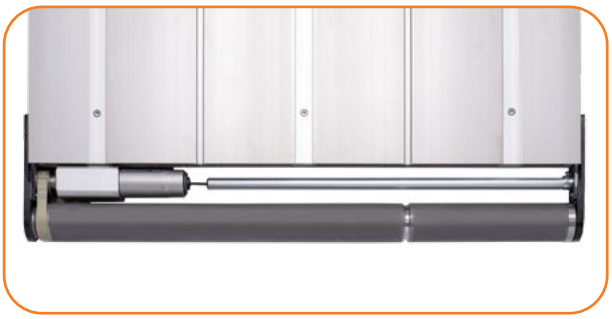

## Specifications

- Conveyor Load Capacity (non-accumulated, distributed load):
  - 10 m/min (33 ft/min) – Up to 75 kg (165 lbs)
  - 15 m/min (49 ft/min) – Up to 49 kg (108 lbs)
  - 20 m/min (66 ft/min) – Up to 34 kg (75 lbs)
  - 25 m/min (82 ft/min) – Up to 27 kg (59 lbs)
  - 45 m/min (148 ft/min) – Up to 12 kg (26 lbs)
  - 61 m/min (200 ft/min) – Up to 7 kg (15 lbs)
- Belt Speeds: Variable Speed, (6) Speed Options
  - 1 to 10 m/min (3.3 to 33 ft/min)
  - 1.5 to 15 m/min (4.9 to 49 ft/min)
  - 2 to 20 m/min (6.6 to 66 ft/min)
  - 2.5 to 25 m/min (8.2 to 82 ft/min)
  - 4.5 to 45 m/min (14.8 to 148 ft/min)
  - 6.1 to 61 m/min (20 to 200 ft/min)
- Belt Widths: 245 to 914 mm (10 to 36 in)
- Conveyor Lengths: 508 to 2940 mm (20 in to 10 ft)
- V-groove bedplate with guided belt provides belt tracking, even under demanding side load applications
  - Cam tracking standard on Non V-Guided belt conveyors
- Indexing Capable – Up to 30 indexes per minute
- iDrive2 Controls: 3 control options available
  - **Keypad Control:** Includes electrical box with speed and direction control switches, compact NEMA1 control box can be mounted directly on to conveyor via T-Slot, 115VAC power supply is optional.
  - **Remote Switch Control:** Includes electrical box with cable grip for control wiring, compact NEMA1 control box can be mounted directly on to conveyor via T-Slot, 115VAC power supply is optional.
  - **Drive Controller only:** Includes motor controller to be mounted by others in centralized control box, no power supply is available for this option

**2700 Series Flat Belt End Drive iDrive2Conveyor**

2 L E D M W W - L L L L 1 0 A P P P P B B - F D F P B

- **Speed Range:** **A** = 201 FPM, **B** = 147 FPM, **C** = 120 FPM, **D** = 82 FPM, **E** = 67 FPM, **F** = 49 FPM, **G** = 33 FPM
- **Power Supply:** **P** = Power Supply (115V) included, **N** = No power supply included
- **Control Type:** **F** = Two speed & on/off conveyor mounted control
  **R** = Mounted controller with remote switched control **C** = Controller onlu for customer mounting and switching
- **Integrated Frame Drive:** **FD** = Integrated Frame Drive
- **Belt Type See Note**
- **Profile (D side)**
- **Profile (A side)** **See Pages 34-37**
- **Drive Shaft Position:** **A, B, C or D**
- **Idler Tail Type:** **0** = Standard 60 mm (2.4 in), **5** = Nose Bar 16 mm (5/8 in)
- **V-Guide & Mounting Bracket Options:**
  **1** = Non V-Guide belt, conveyor to include mounting brackets & return roller **4** = V-Guide belt, conveyor NOT to include mounting brackets & no return rollers
  **2** = V-Guide belt, conveyor to include mounting brackets & return rollers **5** = Non V-Guide belt, conveyor NOT to include mounting brackets, with return rollers
  **3** = Non V-Guide belt, conveyor NOT to include mounting brackets & no return rollers **6** = V-Guide belt, conveyor NOT to include mounting brackets, with return rollers
- **Conveyor Length Reference:** 0170 to 1000 in 0001 foot increments
- **Conveyor Width Reference:** 10 to 36 in inches
- **Documentation Language:** **M** = US English, **U** = Europe English, **D** = German, **F** = French, **S** = Spanish
- **Prefix:** **2L** = 2700 Series Belted, **ED** = End Drive Flat Belt

* Conveyor load capacity depends on conveyor size, incline, motor position, accumulated loads and other factors.

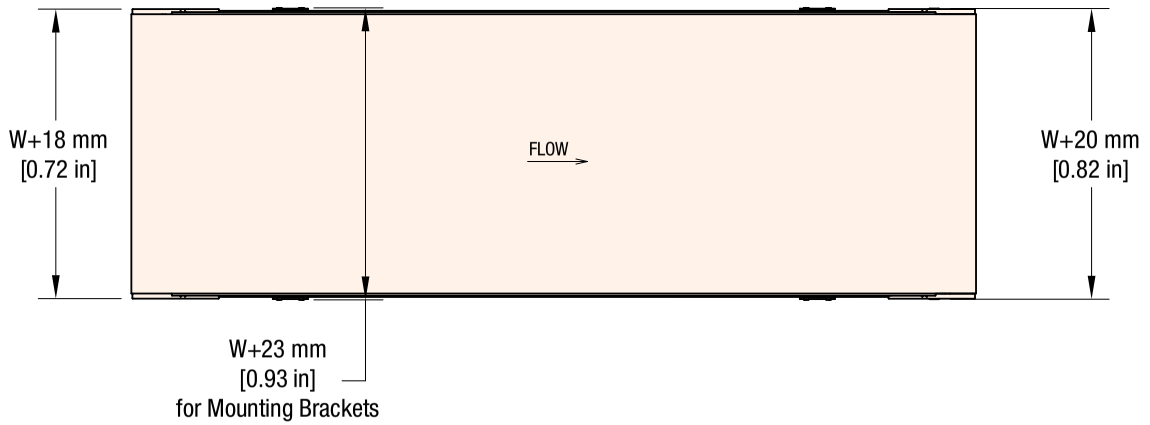


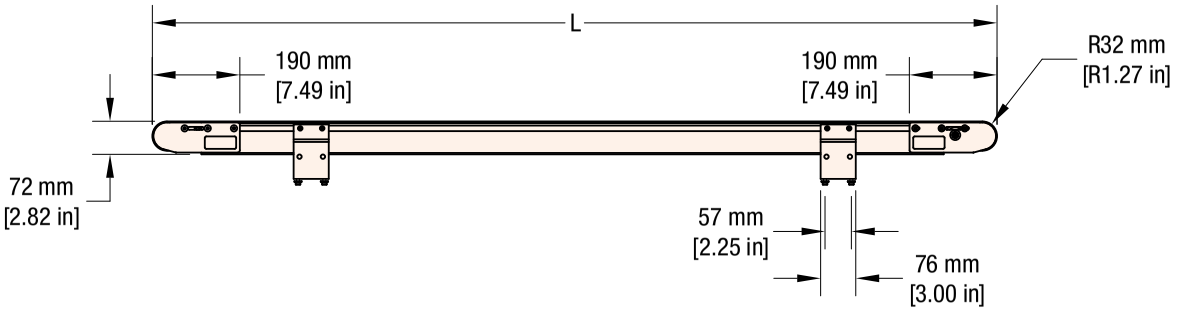


**DRIVE SHAFT POSITION**

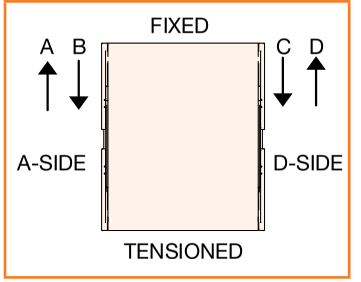


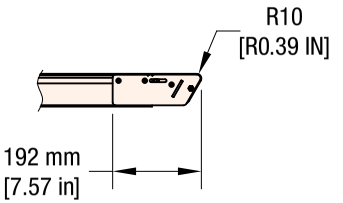


Optional Nose Bar Transfer

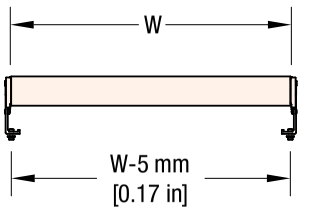


**W** = Conveyor Belt Width **Dim** = mm (in)

| STANDARD SIZES | | | | | | | | | | | | | | |
|---|---|---|---|---|---|---|---|---|---|---|---|---|---|---|
| **Conveyor Width Reference** | 10 | 12 | 14 | 16 | 18 | 20 | 22 | 24 | 26 | 28 | 30 | 32 | 34 | 36 |
| **Conveyor Belt Width (W)** | 254 mm (10 in) | 305 mm (12 in) | 356 mm (14 in) | 406 mm (16 in) | 457 mm (18 in) | 508 mm (20 in) | 559 mm (22 in) | 610 mm (24 in) | 660 mm (26 in) | 711 mm (28 in) | 762 mm (30 in) | 813 mm (32 in) | 864 mm (34 in) | 914 mm (36 in) |
| **Conveyor Length Reference** | 0170 | | 0001 increments **up to...** | | | | | | | | | | 1000 | |
| **Conveyor Length (L)** | 508 mm (1.7 ft) | | 3 mm (0.12 in) increments **up to...** | | | | | | | | | | 3,048 mm (10 ft) | |

**NOTE:** Conveyor longer than 3,658 mm (12 ft) will be constructed using two equal length frames.
***NOTE:** Max length varies based on tail section.

# 2200 SERIES PRECISION MOVE FLAT & CLEATED BELT END DRIVE

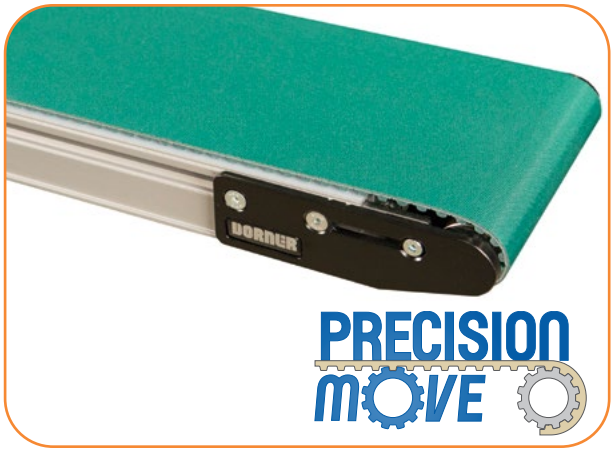


## Specifications

- Loads up to 91 kg (200 lbs)*
- Belt speeds up to 113 m/min (370 ft/min)
- Belt widths: 25 to 610 mm (1 to 24 in)
- Conveyor lengths: 457 to 9,144 mm (18 in to 30 ft)
- 38 mm (1.5 in) pitch diameter drive pulley turns approximately 121 mm (4.7 in) of belt per revolution
- T10 profile cogged belt with 12 tooth drive pulley
- Conveyor mechanical accuracy ±.5 mm (± 0.02 in)
- Conveyor package w/servo motor index accuracy ±1 mm (±0.04 in)
- 12 mm diameter integral drive shaft
- Reverse V-Guide provides positive belt tracking, even under demanding side load applications

**STANDARD FEATURE:**
**Reverse V-Guide**

Provides positive tracking along the entire length of the conveyor

**Positive Drive Belting**

Positivity driven belt ensures belt does not slip and allows for higher load capacity

**OPTIONAL:**
**3 Cleat Heights Available**

(20 mm, 36 mm, or 52 mm)

**2200 Series Precision Move Flat Belt End Drive Conveyor**

22 PM M WW - LLLL 1 A PP PP BB - X $T^1$ $T^2$ $T^3$ $T^4$

- **Conveyor Tail Options X** (if required)
  - **A or B** = Drive Shaft ($T^1$ only) **C or D** = Drive Shaft ($T^2$ only) **S** = Stub Shaft
  - **O** = No Shaft **K** = Keyed Auxiliary Shaft
- **Belt Type**
- **Profile (D side)**
- **Profile (A side)**
- **Flow/Drive Shaft Position: A, B, C or D**
- **Return Roller & Mounting Bracket Options: 2** = V-Guided Belt, includes mounting brackets and return rollers **4** = V-Guided Belt, without mounting brackets and return rollers
  **6** = V-Guided Belt, without mounting brackets, includes return rollers
- **Conveyor Length Reference:** LL.LL in feet
- **Conveyor Width Reference**
- **Documentation Language: M** = US, **U** = Europe

**2200 Series Precision Move Cleated Belt End Drive Conveyor**

22 PM M WW - LLLL 1 A PP A 3 SSSS - X $T^1$ $T^2$ $T^3$ $T^4$

- **Conveyor Tail Options X** (if required) *See Drive Shaft Position Chart on next page
  - **A or B** = Drive Shaft ($T^1$ only) **C or D** = Drive Shaft ($T^2$ only) **S** = Stub Shaft
  - **O** = No Shaft **K** = Keyed Auxiliary Shaft
- **Cleat Spacing:** SS.SS in inches
- **Base Belt: 3** = High Friction
- **Cleat Height: A** = 19 mm (.75 in), **B** = 35.6 mm (1.4 in), **C** = 50 mm (2 in)
- **Profile: 01** = Low Side, **02** = 25 mm (1 in) Cleated, **03** = 50 mm (2 in) Cleated
- **Flow/Drive Shaft Position: A, B, C or D**
- **Return Roller & Mounting Bracket Options: 2** = V-Guided Belt, includes mounting brackets and return rollers **4** = V-Guided Belt, without mounting brackets and return rollers
  **6** = V-Guided Belt, without mounting brackets, includes return rollers
- **Conveyor Length Reference:** LL.LL in feet
- **Conveyor Width Reference**
- **Documentation Language: M** = US, **U** = Europe

* Conveyor load capacity depends on conveyor size, incline, motor position, accumulated loads and other factors.

Order gearmotor mounting packages and gearmotors separately, see pages 73-78
For support stands and accessories, see pages 90-95

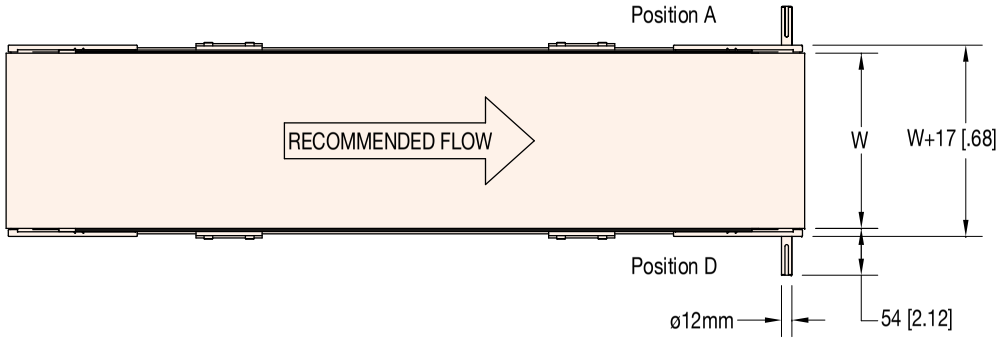


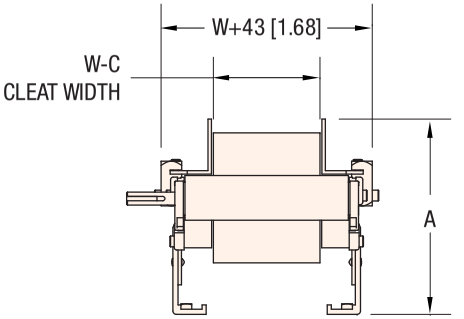


**CLEATED BELT**

A = 155 [6.10] for 25 [1"] HIGH SIDES
180 [7.10] for 50 [2"] HIGH SIDES
C = 29 [1.12] for conveyors up to 203 [8"] widths
54 [2.12] for conveyors in 305 - 607 [12 - 24"] widths

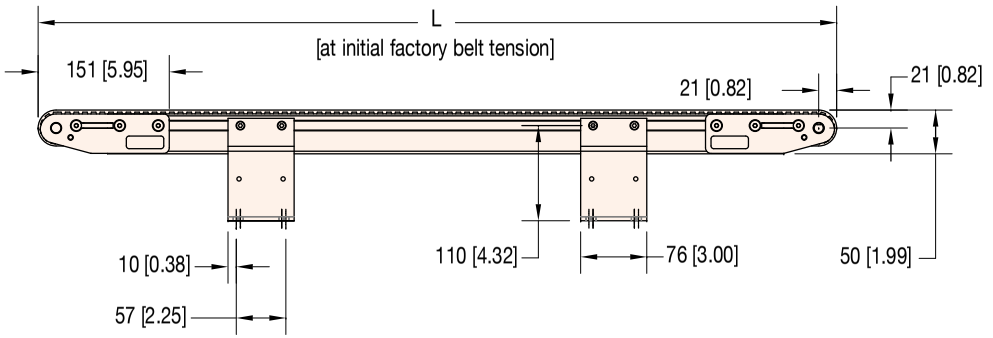


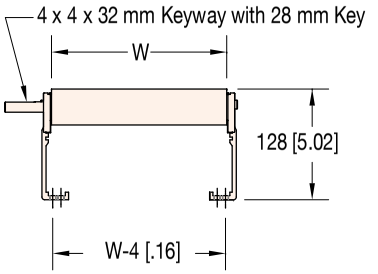


**W** = Conveyor Belt Width **Dim** = mm (in)

| STANDARD SIZES | | | | | | | | | |
|---|---|---|---|---|---|---|---|---|---|
| **Conveyor Width Reference** | 01 | 02 | 03 | 04 | 06 | 08 | 12 | 18 | 24 |
| **Conveyor Belt Width (W)** | 25 mm (1 in)* | 45 mm (1.75 in) | 70 mm 2.75 in) | 95 mm (3.75 in) | 152 mm (6.0 in) | 203 mm (8.0 in) | 305 mm (12.0 in) | 457 mm (18.0 in) | 607 mm (24.0 in) |
| **Conveyor Length Reference** | 0150 | | 0001 increments **up to...** | | | | | 3000 | |
| **Conveyor Length** | 457 mm (1.5 ft) | | 2.54 mm (0.1 in) increments **up to...** | | | | | 9,144 mm (30 ft) | |

**NOTE:** Actual conveyor length may need to be adjusted to match belt pitch.
Conveyors longer than 305 to 457 mm (12.01 to 18.00 ft) will be constructed using two equal length frame sections.
Conveyors 5486 to 8229 mm (18.01 to 27.00 ft) in length will be constructed using three equal length frame sections.
Conveyors 8229 to 9144 (27.01 to 30.00 ft) in length will be constructed using four equal length frame sections.
*Cleats not available for 25 mm (1 in) wide Precision Move Conveyors.

**DRIVE SHAFT POSITION**

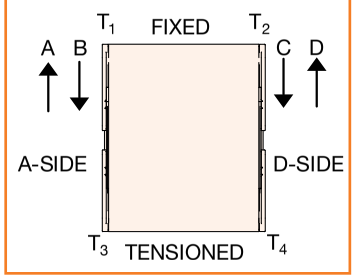

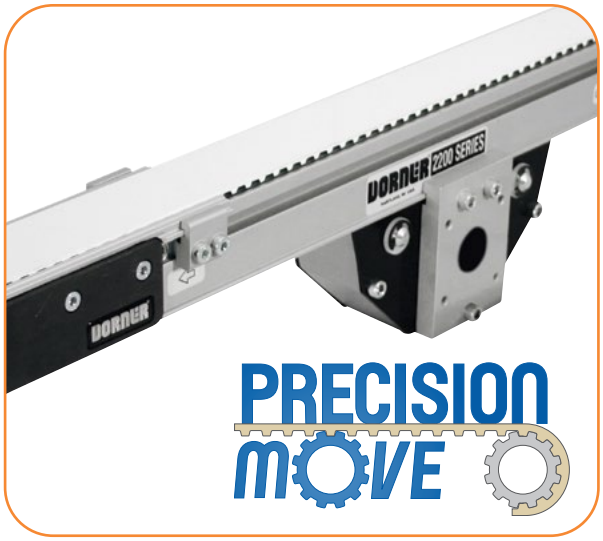


## Specifications

- Loads up to 91 kg (200 lbs)*
- Belt speeds up to 113 m/min (370 ft/min)
- Belt widths: 25 to 610 mm to (1 to 24 in)
- Conveyor lengths: 18" (457 mm) to 30' (9,144 mm)
- 51 mm (2 in) pitch diameter drive pulley turns approximately 160 mm (6.3 in) of belt per revolution
- T10 profile cogged belt with 16 tooth drive pulley
- Conveyor mechanical accuracy ±.5 mm (± 0.02 in)
- Drive shaft options:
  - 12 mm diameter integral drive shaft
  - 16 tooth 13 mm (0.5 in) diameter hollow spline drive
- Reverse V-Guide provides positive belt tracking, even under demanding side load applications

**STANDARD FEATURE:**
**Reverse V-Guide**

Provides positive tracking along the entire length of the conveyor

**Positive Drive Belting**

Positively driven belt ensures belt does not slip and allows for higher load capacity

**2200 Series Precision Move Flat Belt Mid Drive Conveyor**

22 PD M WW - LLLL 1 A PP PP BB - X $T^1$ $T^2$ $T^3$ $T^4$

- **Conveyor Tail Options X** (if required) *See Drive Shaft Position Chart on next page
  - **O** = No Shaft
  - **K** = Keyed Auxiliary Shaft
  - **S** = Stub Shaft
- **Belt Type**
- **Profile (D side)**
- **Profile (A side)**
- **Mid Drive Shaft Position:** **A** = A side, **D** = D side, **E** = Both side, **G** = Gang
- **V-guide & Mounting Bracket Options:**
  - **2** = V-Guided Belt, includes mounting brackets and return rollers
  - **4** = V-Guided Belt, without mounting brackets and return rollers
  - **6** = V-Guided Belt, without mounting brackets, includes return rollers
- **Conveyor Length Reference:** LL.LL in feet
- **Conveyor Width Reference**
- **Documentation Language:** **M** = US, **U** = Europe

* Conveyor load capacity depends on conveyor size, incline, motor position, accumulated loads and other factors.

Order gearmotor mounting packages and gearmotors separately, see pages 73-78
For support stands and accessories, see pages 90-95

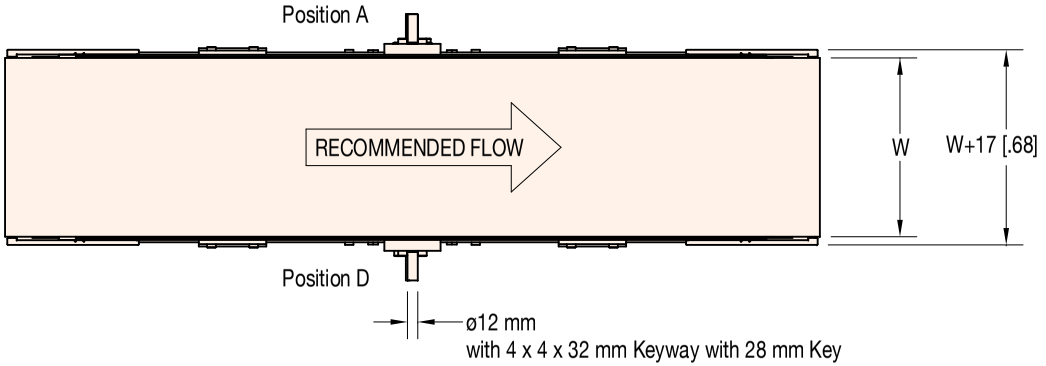


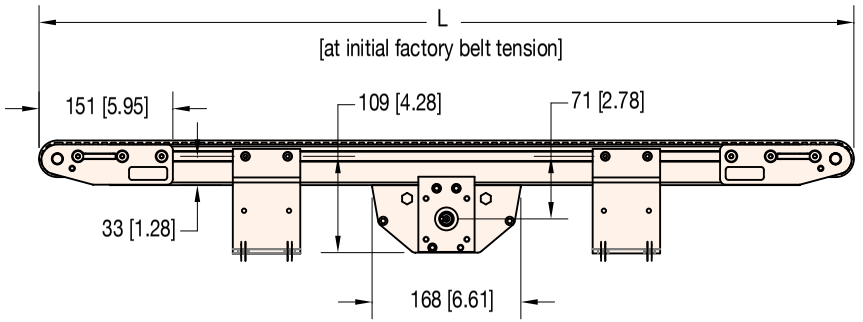


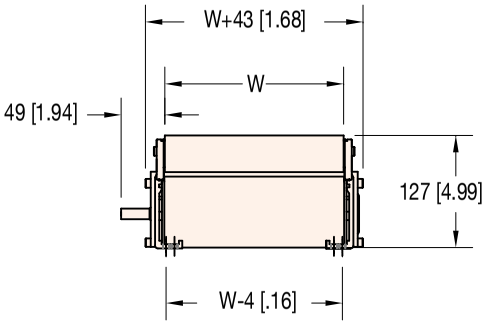


**W** = Conveyor Belt Width **Dim** = mm (in)

| STANDARD SIZES | | | | | | | | | |
|---|---|---|---|---|---|---|---|---|---|
| **Conveyor Width Reference** | 01 | 02 | 03 | 04 | 06 | 08 | 12 | 18 | 24 |
| **Conveyor Belt Width (W)** | 25 mm (1 in) | 45 mm 1.75 in) | 70 mm 2.75 in) | 95 mm (3.75 in) | 152 mm (6.0 in) | 203 mm (8.0 in) | 305 mm (12.0 in) | 457 mm (18.0 in) | 607 mm (24.0 in) |
| **Conveyor Length Reference** | 0150 | | 0001 increments **up to...** | | | | | 3000 | |
| **Conveyor Length** | 457 mm (1.5 ft) | | 2.54mm (0.1 in) increments **up to...** | | | | | 9,144mm (30 ft) | |

**NOTE:** Actual conveyor length may need to be adjusted to match belt pitch.
Conveyors longer than 305 to 457 mm (12.01 to 18.00 ft) will be constructed using two equal length frame sections.
Conveyors 5486 to 8229 mm (18.01 to 27.00 ft) in length will be constructed using three equal length frame sections.
Conveyors 8229 to 9144 (27.01 to 30.00 ft) in length will be constructed using four equal length frame sections.

**DRIVE SHAFT POSITION**

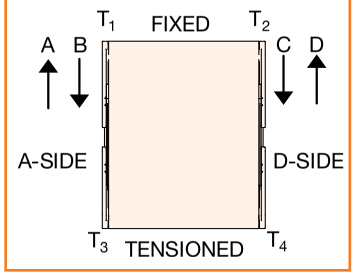

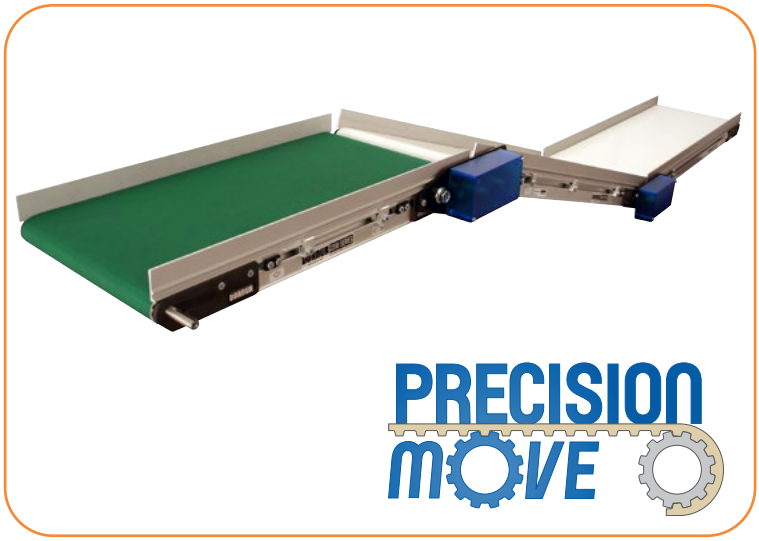


## Specifications

- Link multiple conveyors with 1 drive
- Adjustable angle from 0° to 25°
- Variety of timing belt ratios available
  - 1:1, 1.27:1, 1.75:1, 2:1 can be used to speed or slow down the conveyor
- Maximum number of conveyors = 3
- Pull or close gaps between product
- Change belt types on each conveyor
- Includes tie plates, pulley kit, tension adjustment and guard
- Utilize low, high friction belts, and/or multiple speeds in a single configuration
- Can not be used with cleated belt applications

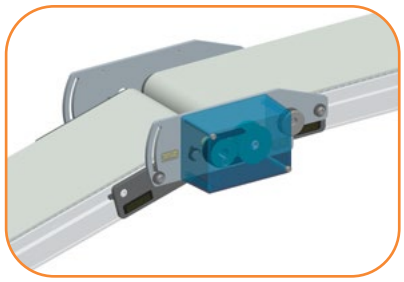

**STANDARD FEATURE:**
**Series Drive Kit**

Includes tie plates for both sides of conveyor and timing belt / pulleys and guard

| Part Number | Drive Teeth | Driven Teeth | Infeed Conveyor Speed Condition |
|---|---|---|---|
| 202363-1632 | 16 | 32 | 2X Speed Up |
| 202363-1628 | 16 | 28 | 1.75X Speed Up |
| 202363-2228 | 22 | 28 | 1.27X Speed Up |
| 202363-2222 | 22 | 22 | Same Speed |
| 202363-2822 | 28 | 22 | 0.78X Slow Down |
| 202363-2816 | 28 | 16 | 0.57X Slow Down |
| 202363-3216 | 32 | 16 | 2X Slow Down |

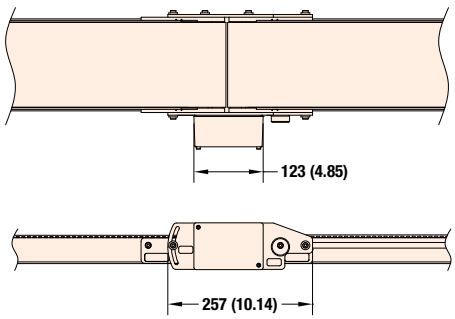


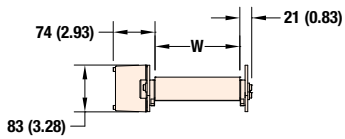


**Dim** = mm (in)

*Due to the wide variety of drive set ups and applications, point of installation guarding is the responsibility of the end user.*

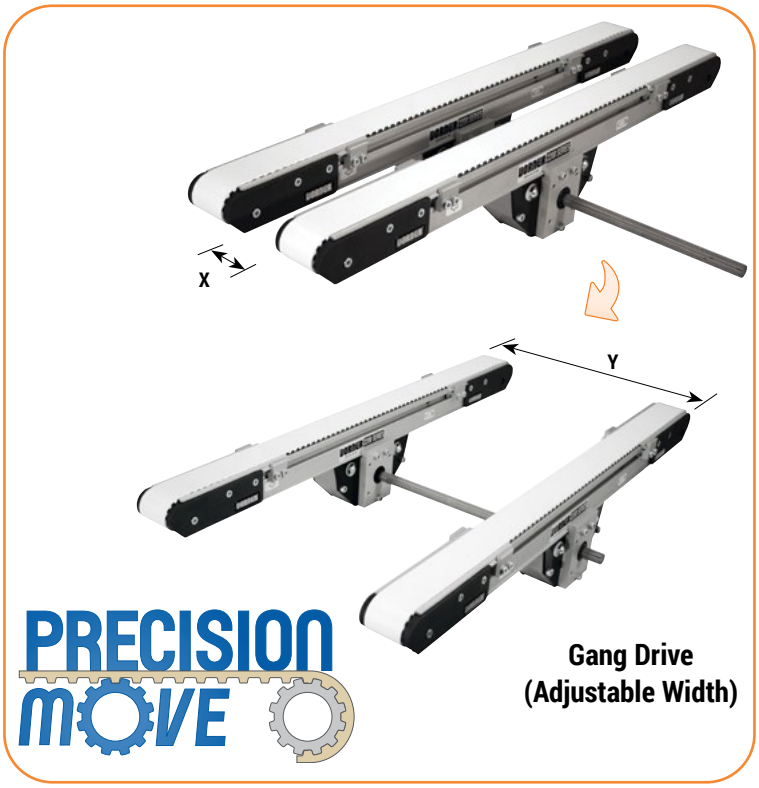


Gang Drive
(Adjustable Width)

## Mid Drive Gang Driven Conveyors

### Specifications

- Adjustable for various product widths
- Drive moveable between tails
- Frees up ends of conveyor
- Conveyor center distances can be moved while conveyor is running
- Minimum width (x) = 101 mm (4 in) belt to belt (with std. guarding)
- Minimum width (x) = 45 mm (1.75 in) belt to belt without guarding (end user responsible for point of installation guarding)
- Maximum width (y) = 1,219 mm (48 in) belt to belt
- Maximum total torque = 9.0 Nm (80 in-lbs)
- Compatible with side mount gearmotor package
- Requires 13 mm (½ in) diameter 16 tooth spline drive shaft

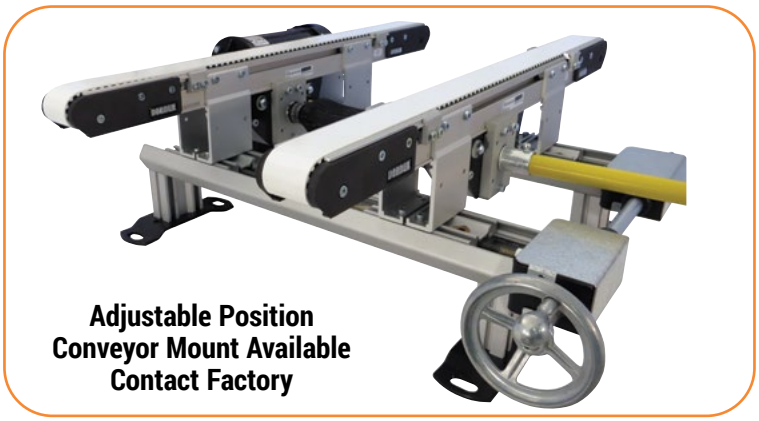

Adjustable Position
Conveyor Mount Available
Contact Factory

## Gang Driven Side Mount Package

### Specifications

- Compatible with all standard load and heavy load 90° gearmotors
- Conveyor position is adjustable along length of spline drive shaft
- Includes shafts, couplings, and expandable shaft guarding
- Mount package is attached to the first conveyor
- Maximum number of conveyors = 3
- Maximum total torque = 9.0 Nm (80 in-lbs)

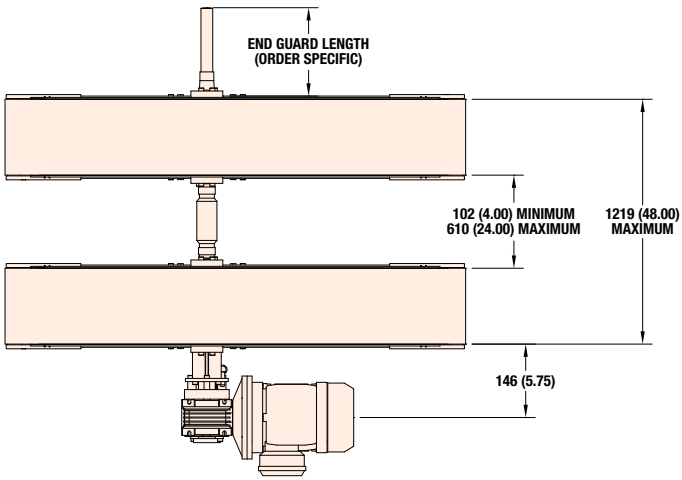


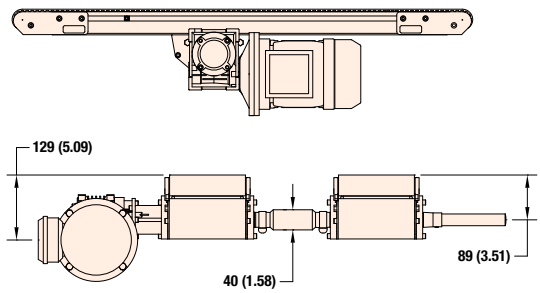


**Refer to page 55 for belt speed options.**

*Due to the wide variety of drive set ups and applications, point of installation guarding is the responsibility of the end user.*

**Dim** = mm (in)

## Precision Move Servo Gearmotor

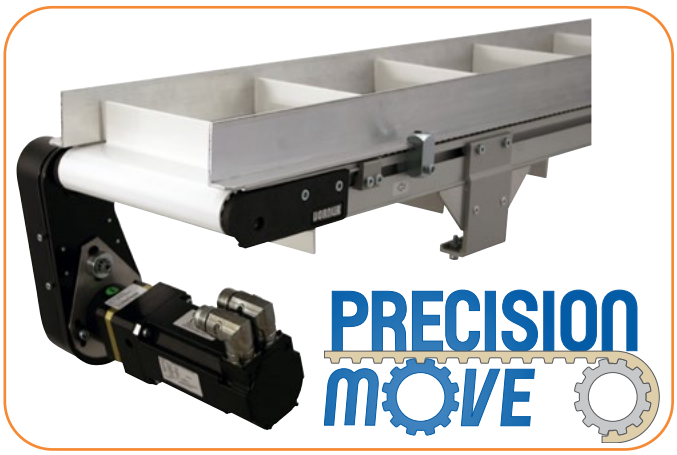


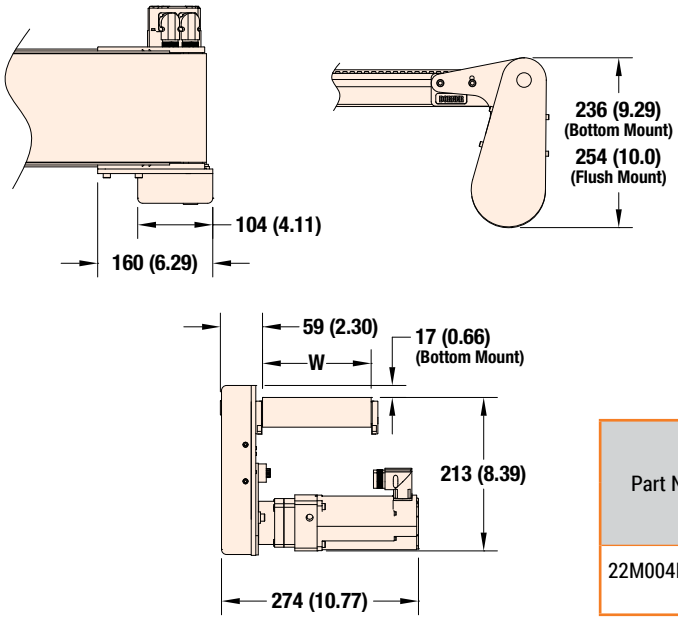


### Specifications

- Standard bottom and flush mount bottom drive configurations
- Indexes per minute rating = 100 per minute
- Conveyor/Drive Package Index accuracy = ± 0.040

### Motor:

- Kollmorgen AKM Series Motor
- Brushless DC Servo motor with encoder
- 80 mm Frame
- 1.02 kW
- Up to 640 VDC input
- Up to 2.62 amps
- Quick disconnect power and communication fittings
- UL, CE, RoHS Compliant

### Gearbox:

- Inline Planetary Reducer
- 4:1 Ratio
- 93% efficient
- 13 arc-minute backlash
- 20,000 hr rated
- RoHS compliant

| Part Number | Controller Voltage | Max Belt Speed (Ft/min) | | Min Belt Speed (Ft/min) | Torque (in-lb) | RPM |
|---|---|---|---|---|---|---|
| | | Bottom Mount | Flush Mount | | | |
| 22M004PR2B1KW | 115V input | 166 | 253 | 10 | 79 | 325 |
| | 230V input | 276 | 420 | 10 | 79 | 625 |

## Precision Move Servo Bottom and Flush Mount Package

### Specifications

- Capable of standard bottom mount position and flush mount for wide product handling
- Includes rack and pinion timing belt tension system allowing reversing capability
- Includes high strength timing belt drive pulleys

| Servo Gearmotor or Reducer Only | | | |
|---|---|---|---|
| Description | Part Number | Gearmotor Pulley | Conveyor Pulley |
| Bottom Mount | 202436-A* | 36 tooth | 32 tooth |
| Flush Mount | 202437-A* | 36 tooth | 21 tooth |

*A = Mount position (A, B, C, D)

**Dim** = mm (in)

*Due to the wide variety of drive set ups and applications, point of installation guarding is the responsibility of the end user.*

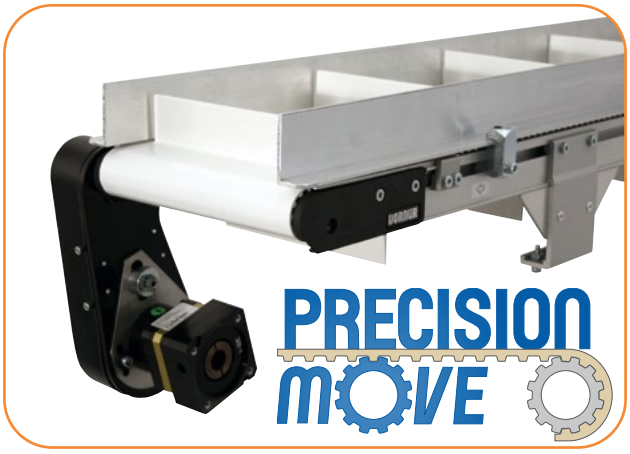


## Precision Move Servo Gearhead Only

### Specifications

- Offered as mount package and gearhead only
- Inline planetary reducer
- 3:1, 4:1, 5:1, 7:1, and 10:1 ratios available
- 93% efficient
- 13 arc-minute backlash
- 20,000 hr rated
- RoHS compliant

## Gear Reducer for Customer Specified Motor

| Generalized Sizes | | | | | | |
|---|---|---|---|---|---|---|
| Shaft Diameter | | Shaft Length | | Bolt Circle | | Pilot Diameter |
| Min | Max | Min | Max | Min | Max | Max |
| 6 (0.24) | 14 (0.55) | 17 (0.67) | 39 (1.54) | 60 (2.36) | 105 (4.13) | 80 (3.15) |

**Dim:** mm (in)
**NOTE:** These are generalized guidelines for mating adapters. Consult DTools or customer service to identify proper adapter for given motor.

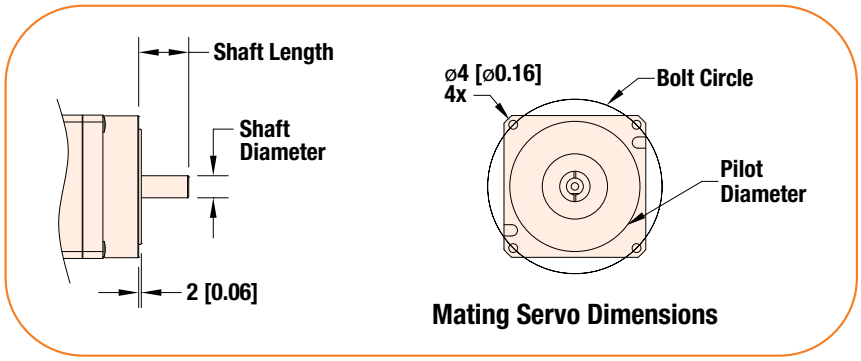


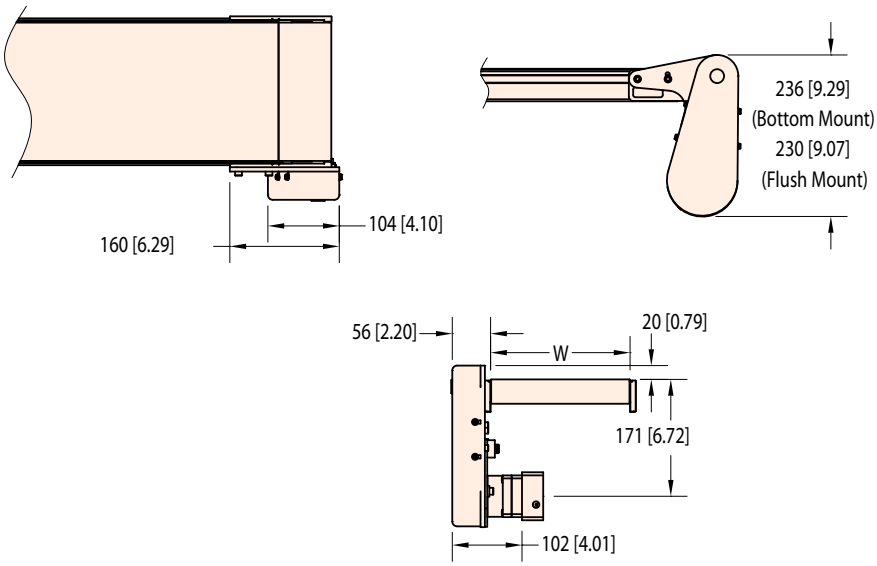


**Dim** = mm (in)

*Due to the wide variety of drive set ups and applications, point of installation guarding is the responsibility of the end user.*

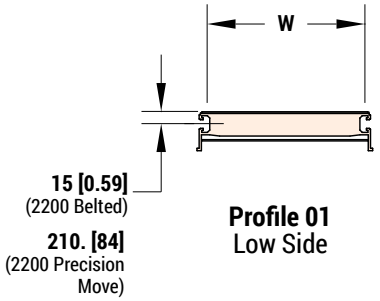


**Profile 01**
Low Side

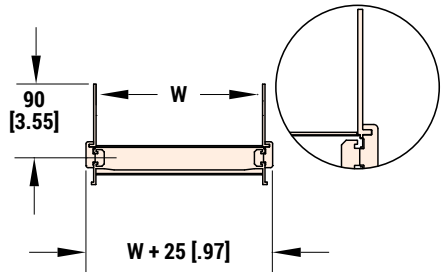


**Profile 04**
76 mm (3 in) Aluminum Side

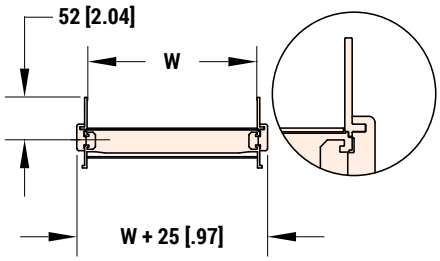


**Profile 05**
38 mm (1.5 in) Aluminum Side

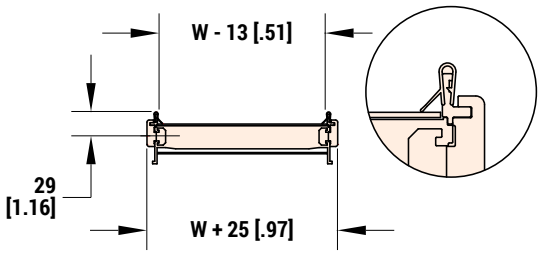


**Profile 07***
13 mm (0.5 in) Low to Side Wiper
*(Not available on Precision Move)*

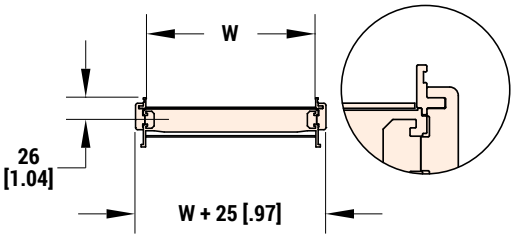


**Profile 09**
13 mm (0.5 in) Aluminum Side

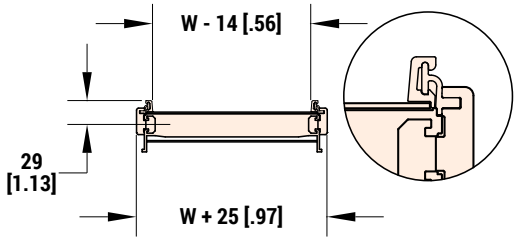


**Profile 10**
13 mm (0.5 in) Extruded Plastic
*(Do not use with belt #64)*
*(Not available on Precision Move)*

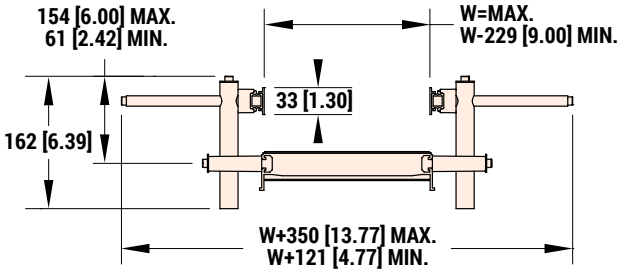


**Profile 13**
Adjustable Guiding
33 mm (1.3 in) HDPE Face

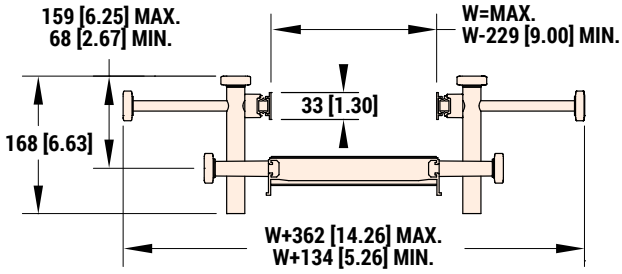


**Profile 14**
Tool-less Adjustable Guiding
33 mm (1.3 in) HDPE Face

** = Not available on Gravity Roller Conveyors and do not use with high friction belts*

**W** = Conveyor Belt Width **Dim** = mm (in)
*Due to the wide variety of drive set ups and applications, point of installation guarding is the responsibility of the end user.*

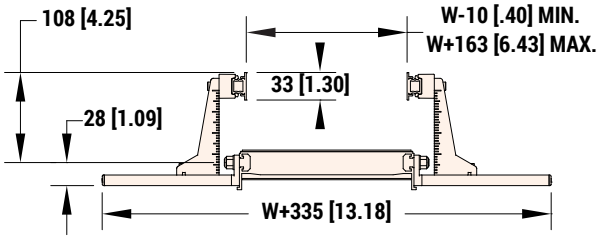


**Profile 16**
Outboard Adjustable Guiding
33 mm (1.3 in) HDPE Face

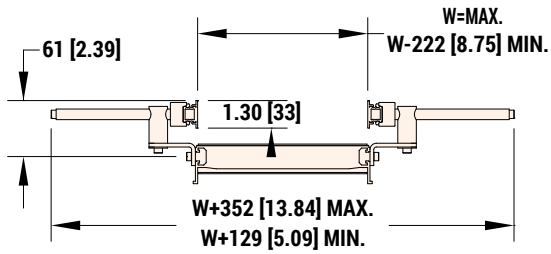


**Profile 19**
Horizontal Adjustable Guiding
33 mm (1.3 in) HDPE Face

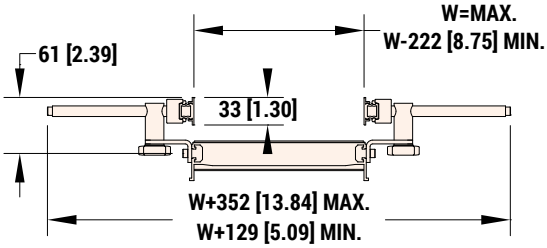


**Profile 20**
Tool-less Horizontal Adjustable Guiding
33 mm (1.3 in) HDPE Face

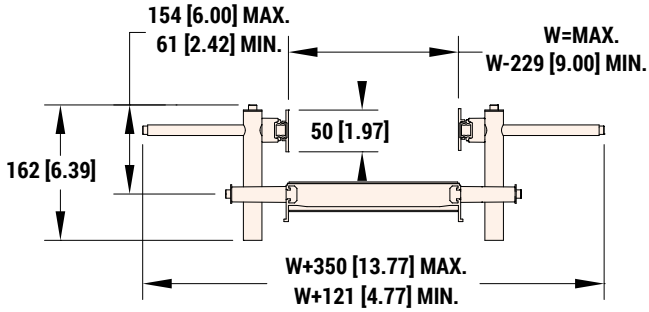


**Profile 33**
Adjustable Guiding
50 mm (2 in) HDPE Face

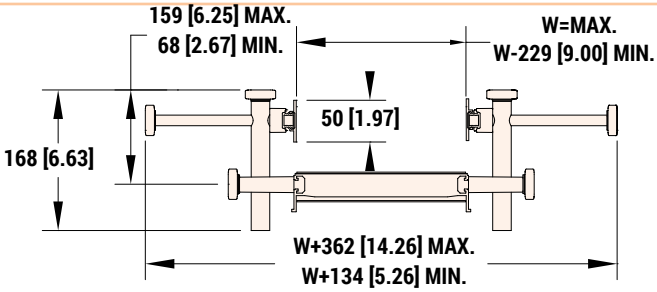


**Profile 34**
Tool-less Adjustable Guiding
50 mm (2 in) HDPE Face

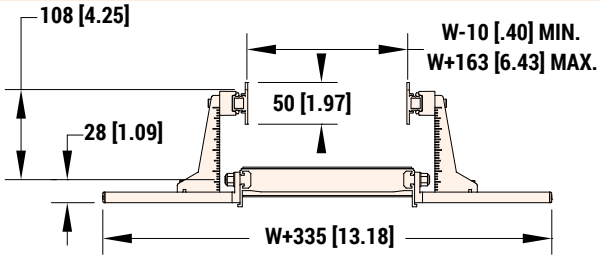


**Profile 36**
Outboard Adjustable Guiding
50 mm (2 in) HDPE Face

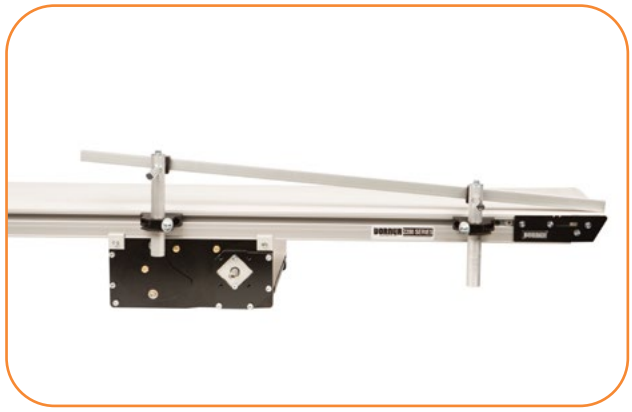

**Profile 13 Flat Belt - Adjustable Guiding**

**W** = Conveyor Belt Width **Dim** = mm (in)

*Due to the wide variety of drive set ups and applications, point of installation guarding is the responsibility of the end user.*

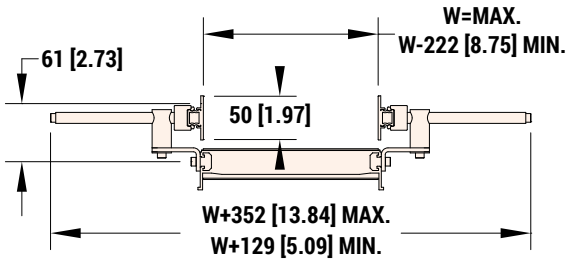


**Profile 39**
Horizontal Adjustable Guiding
50 mm (2 in) HDPE Face

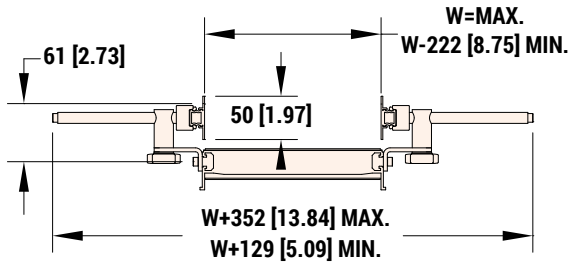


**Profile 40**
Tool-less Horizontal Adjustable Guiding
50 mm (2 in) HDPE Face

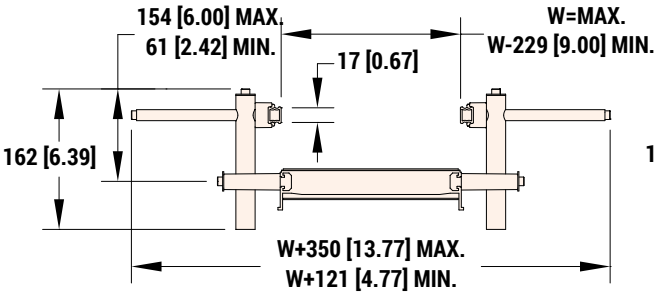


**Profile 43**
Adjustable Guiding
Aluminum Face

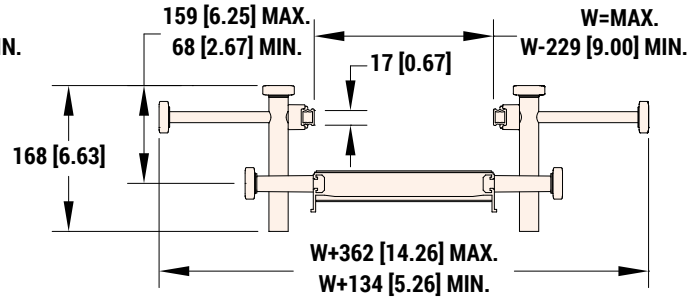


**Profile 44**
Tool-less Adjustable Guiding
Aluminum Face

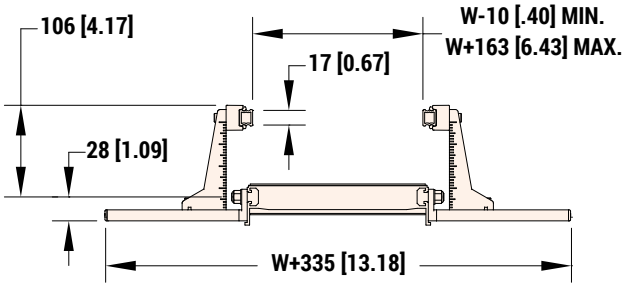


**Profile 46**
Outboard Adjustable Guiding
Aluminum Face

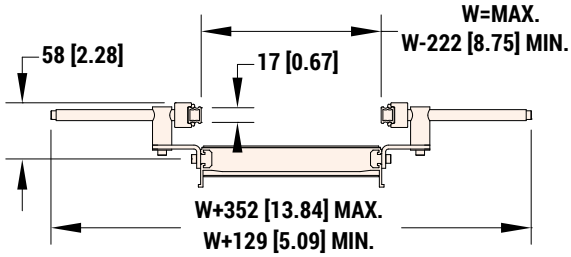


**Profile 49**
Horizontal Adjustable Guiding
Aluminum Face

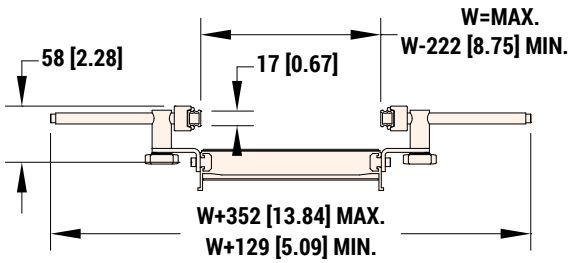


**Profile 50**
Tool-less Horizontal Adjustable Guiding
Aluminum Face

**W** = Conveyor Belt Width **Dim** = mm (in)

*Due to the wide variety of drive set ups and applications, point of installation guarding is the responsibility of the end user.*

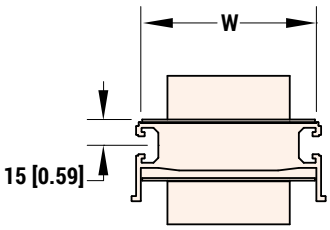


**Cleated Profile 0**
Low Side Cleated

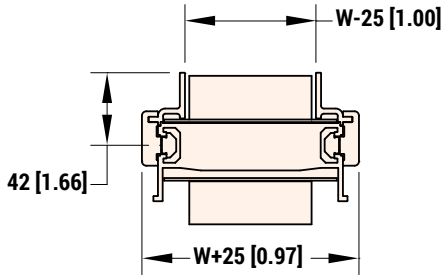


**Cleated Profile 2/4**
25 mm (1 in) Aluminum Side
**Note:** Profile 2 is cut 45 degree on both end - for reversing applications
Profile 4 is cut 45 degree on infeed end, 90 degree on discharge

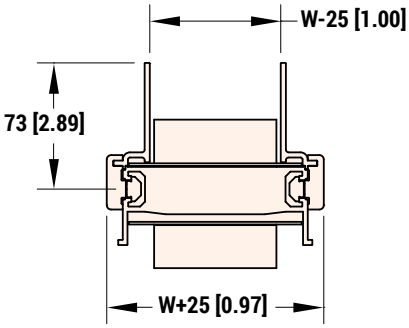


**Cleated Profile 3/5**
64 mm (2.5 in) Aluminum Side
**Note:** Profile 3 is cut 45 degree on both end - for reversing applications
Profile 5 is cut 45 degree on infeed end, 90 degree on discharge

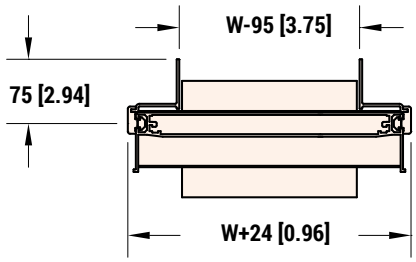


**Cleated LPZ Profile 3**
64 mm (2.5 in) Aluminum Side

**Profile 04 Flat Belt - Aluminum Side**

**Profile 3 Cleated LPZ - Aluminum Side**

**W** = Conveyor Belt Width **Dim** = mm (in)
*Due to the wide variety of drive set ups and applications, point of installation guarding is the responsibility of the end user.*

# 2200/2700 SERIES

## Standard Belt Selection Guide

***Standard belt material is stocked at Dorner, then cut & spliced at the factory for fast conveyor shipment.***

| Belt Type - Finger Splice | Belt Type - Plastic Clipper | Belt Type - Metal Clipper | Belt Specifications | V-Guidable | 8 mm (5/16 in) Nose Bar | 16 mm (5/8 in) Nose Bar | Belt Thickness | Surface Material | Maximum Part Temperature | Coefficient of Friction | FDA Approved | Anti-Static | ESD | Chemical Resistance | Special Characteristics or Applications |
|---|---|---|---|---|---|---|---|---|---|---|---|---|---|---|---|
| 01 | A1 | 1A | FDA Accumulation | x | | | 1.7 (0.067) | Urethane | 212˚F (100˚C) | Low | x | x | | Good | Packaging, clean room and inspection |
| 02 | A2 | 2A | General Purpose | x | | | 1.8 (0.071) | Urethane | 212˚F (100˚C) | Med | x | x | | Good | Most versatile belt offering |
| 03 | A3 | 3A | FDA High Friction | x | | | 1.7 (0.067) | Urethane | 212˚F (100˚C) | High | x | x | | Good | Packaging, clean room and inspection |
| 05 | A5 | 5A | Accumulation | x | | x | 1.2 (0.047) | Urethane | 212˚F (100˚C) | V-Low | x | x | | Good | Accumulation of products |
| 06 | A6 | 6A | Static Dissipative | x | | | 1.6 (0.063) | Urethane | 176˚F (80˚C) | V-Low | | x | x | Good | Electronics Handling |
| 08 | A8 | 8A | High Friction | x | | | 2.1 (0.083) | PVC | 158˚F (70˚C) | V-High | | x | | Poor | Conveys up to 35˚ inclines* |
| 09 | | | iDrive General Purpose | x | | x | 1.5 (0.059) | Urethane | 212˚F (100˚C) | High | x | | | Good | Lower No Load Torque |

Dim = mm (in)

**Note:** See below for splice details. Plastic Clipper splice requires longer lead times. Clipper splice not available on Z-Frame Series Conveyors.

**Note:** Belts with V-Guiding may have a slight high spot or rib on the top surface. This rib would run longitudinally along the center of the belt. Consult factory with applications for which this may cause interference.

*Incline varies due to factors like dust, fluids and part material.

## BELT SPLICING

### Finger Splice

All belts are available with a standard Thermoformed finger splice. This splice makes the belt continuous and is virtually undetectable. Splice bonding methods vary by belt type. Consult factory for details.

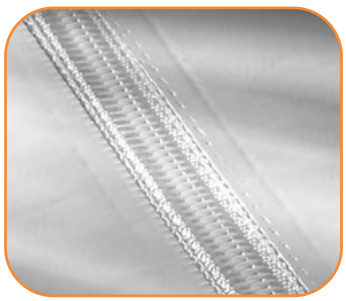

### Plastic Clipper**

An optional plastic clipper splice is available for quick removal of belts or when conveyors are installed in tight spaces.

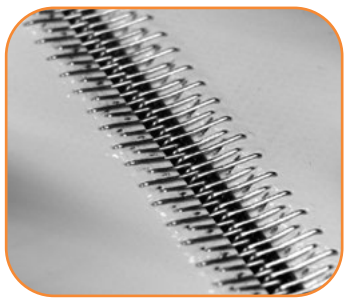

### Metal Clipper**

An optional metal clipper splice is also available for quick removal of belts or when conveyors are installed in tight spaces.

*** See belt charts for compatibility. Not for use with 2200 Series Nose Bar Transfers. Plastic and Metal Clippers are slightly thicker than base belt. Contact factory for details.*

## Specialty Belt Selection Guide

*Specialty belt material is not stocked at Dorner and needs to be custom ordered for your special conveyor needs.*

| Belt Type - Finger Splice | Belt Type - Plastic Clipper | Belt Type - Metal Clipper | Belt Specifications | V-Guideable | 8 mm (5/16 in) Nose Bar | 16 mm (5/8 in) Nose Bar | Belt Thickness | Surface Material | Maximum Part Temperature | Coefficient of Friction | FDA Approved | Anti-Static | Static Conductive | Chemical Resistance | Special Characteristics or Applications |
|---|---|---|---|---|---|---|---|---|---|---|---|---|---|---|---|
| 19 | | | Nose bar High friction | | x | x | 0.7 (0.03) | Urethane | 212˚F (100˚C) | High | x | x | | Good | 8 mm (5/16 in) Nose bar, high friction |
| 50 | | | Heat Resistant | | | | 1.3 (0.05) | Silicone | 356˚F (180˚C) | Low | | x | | V-Good | High temperature |
| 53 | | | Translucent | | x | x | 0.02 (0.5) | Urethane | 212˚F (100˚C) | V-Low | x | | | Good | Back lit inspection |
| 54 | F4 | 4F | FDA Sealed Edge** | x | | | 1.6 (0.06) | Urethane | 176˚F (80˚C) | Low | x | x | | Good | Packaging, clean room and inspection |
| 55 | F5 | 5F | FDA Sealed Edge** | x | | | 1.6 (0.06) | Urethane | 176˚F (80˚C) | High | x | x | | Good | Packaging, clean room and inspection |
| 56 | | 6F | Cut Resistant | x | | | 2.1 (0.08) | Urethane | 212˚F (100˚C) | Med. | | x | | Good | Oily product release, metal stamping |
| 57 | | 7F | Cut Resistant | x | | | 2.5 (0.10) | Nitrile | 176˚F (80˚C) | Med. | | x | | Poor | Felt-like, dry metal stamping, glass and ceramic |
| 58 | | 8F | Cut Resistant | x | | | 1.6 (0.06) | Urethane | 194˚F (90˚C) | Low | | x | | Good | Surface gold colored |
| 59 | F9 | 9F | Color Contrasting | x | | | 1.6 (0.06) | PVC | 158˚F (70˚C) | Med. | | x | | Poor | Black colored, hides overspray from ink jet |
| 60 | G0 | 0G | Color Contrasting | x | | x | 0.05 (1.3) | Urethane | 212˚F (100˚C) | Low | x | x | | Good | Green colored |
| 61 | G1 | 1G | Color Contrasting | x | | x | 0.05 (1.3) | Urethane | 212˚F (100˚C) | Low | x | | | Good | Blue colored |
| 63 | | 3G | Electrically Conductive | x | | | 0.05 (1.2) | Urethane | 176˚F (80˚C) | Low | | x | x | Good | Static conductive, electronics handling |
| 64 | | 4G | High Friction | x | | | 4.4 (0.17) | PVC | 176˚F (80˚C) | V-High | | x | | Poor | Dark Green colored, rough top surface, product cushioning, incline/decline apps |
| 66 | | 6G | Chemical Resistant | x | | | 1.7 (0.07) | Polyester | 212˚F (100˚C) | Med. | x | x | | V-Good | Good cut resistance, metal stamping apps |
| 67 | | | Low Friction Cleated (Do not use with Z-Frame) | x | | | 1.6 (0.06) | Polyester | 212˚F (100˚C) | n/a | x | | | Good | Excellent product release, consult factory for part number and how to specify low friction |
| 68 | G8 | | FDA Encased** | x | | | 1.5 (0.06) | Urethane | 176˚F (80˚C) | Low | x | x | | Good | Urethane enclosed for added sanitary protection |
| 69 | G9 | | FDA Encased** | x | | | 2.2 (0.09) | Urethane | 176˚F (80˚C) | Med. | x | x | | Good | Urethane enclosed for added sanitary protection |
| 71 | | | FDA High Release | x | | | 1.8 (0.07) | Urethane | 212˚F (100˚C) | Low | x | | | Good | High release cover |
| 72 | | | Nose bar | x | | x | 1.2 (0.05) | Urethane | 212˚F (100˚C) | Med. | x | x | | Good | 16 mm (5/8 in) Nose bar, medium friction |
| 73 | | | Nose bar Low friction | | x | x | 0.9 (0.03) | Urethane | 212˚F (100˚C) | Low | x | x | | Good | 8 mm (5/16 in) Nose bar, low friction |
| 75 | | | Black Urethane | x | | | 1.5 (0.06) | Urethane | 176˚F (80˚C) | Low | | x | | Good | |
| 76 | | | Black Nose bar | x | | x | 1.2 (0.05) | Urethane | 176˚F (80˚C) | Med. | | x | | Good | Black Color, 8 mm (5/16 in) nose bar |
| 77 | | | High Friction, green | x | | | 2.2 (0.09) | Urethane | 212˚F (100˚C) | High | | x | | Good | Green color, high friction, urethane, grooved |
| 78 | | | Chemical, Polyolefin, HF | | | | 1.4 (0.05) | Polyolefin | 140˚F (60˚C) | High | x | | | V-Good | Chemical resistant, food grade |
| 79 | | | Chemical, Polyolefin, LF | | | | 1.3 (0.05) | Polyolefin | 140˚F (60˚C) | Med. | x | x | | V-Good | Chemical resistant, food grade |
| 80 | | | High Friction, silicone | x | | x | 1 (0.04) | Silicone | 176˚F (80˚C) | High | x | | | Good | Silicone material, high friction |
| 81 | | | Low Friction, silicone | x | | x | 1 (0.04) | Silicone | 212˚F (100˚C) | Med. | x | | | Good | Silicone material, low to medium friction |

**Dim** = mm (in)
**Note:** Clipper Splices not available on Z-Frame Series Conveyors.
**Note:** Conveyors wider than 1,016 mm (40 in) require V-Guide belt tracking

**Note:** Belts with V-Guiding may have a slight high spot or rib on the top surface. This rib would run longitudinally along the center of the belt. Consult factory with applications for which this may cause interference.
** Not available in 51 mm (2 in) widths

## Cleated Belt Profiles

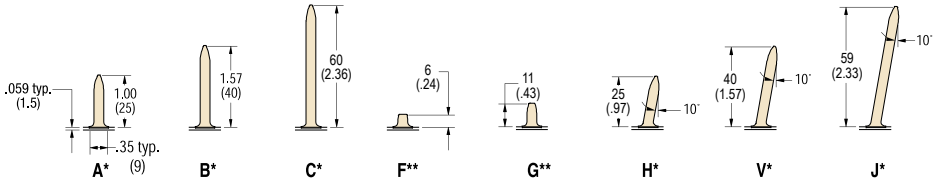


## Cleated Belt Selection Guide

| Cleat Type | Base Belt | Belt Thickness | Surface Material | Color | Coefficient of Friction | V-Guidable | Maximum Part Temperature | FDA Approved | Chemical Resistance |
|---|---|---|---|---|---|---|---|---|---|
| A,B,C,F,G,H,V,J | Standard Base Belt | 1.4 (.055) | Urethane | White | High | X | 212˚F (100˚C) | Yes | Good |
| A,B,C,F,G,H,V,J | Low Friction Base Belt | 1.5 (0.06) | Urethane | Natural | Low | X | 212˚F (100˚C) | Yes | Good |
| A,B,C | Wide Cleated Base | 1.5 (0.06) | Urethane | White | Medium | X | 212˚F (100˚C) | Yes | Good |

## Cleated Belt Spacing

- Minimum cleat spacing = 29 mm (1.13 in) - Cleat Selection could impact the minimum spacing. Contact the factory for details.

*Maximum cleat spacing for 457 mm (18 in) and wider conveyors = 508 mm (20 in)
**Maximum cleat spacing for 2 m (7 ft) and longer conveyors = 508 mm (20 in)
18" and wider conveyors are limited to 2 m (7 ft) long

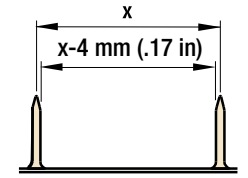


Tolerance ± 2 mm (.08 in)

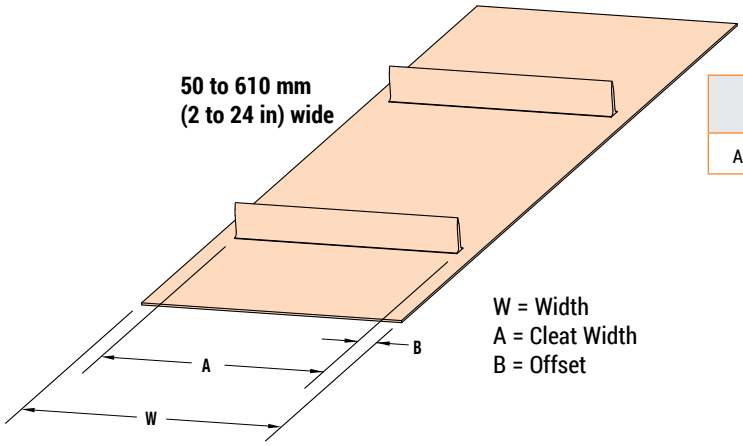


W = Width
A = Cleat Width
B = Offset

| Cleat Type | Cleat Width (A) | Offset (B) |
|---|---|---|
| A,B,C,F, G,H,V,J | W- 30 mm (1.20 in) | 15 mm (0.60 in) |

**Dim** = mm (in)

## Precision Move Belting

### Precision Move Belt Selection Guide

| Part Number Reference | Belt Specifications | Tooth Pitch | Thickness | Material | Top Surface | Color | Maximum Part Temperature | Coefficient of Friction | Durometer | FDA Approved | Chemical Resistance | Max Width |
|---|---|---|---|---|---|---|---|---|---|---|---|---|
| 1P | Low Friction | 10 mm | 4.5 (0.175) | Urethane with nylon top | Carcass | Green | 195˚F (91˚C) | V-Low | N/A | | Good | 610 (24) |
| 3P | High Friction | 10 mm | 4.5 (0.175) | Urethane | Smooth | White | 195˚F (91˚C) | High | 85A | x | Good | 610 (24) |
| 2T | High Strength | 10 mm | 4.6 (0.180) | Urethane with Kevlar cords | Smooth | Natural | 160˚F (71˚C) | Med | 88A | | Good | 152 (6) |

Dim = mm (in)

## Precision Move Cleat Profiles

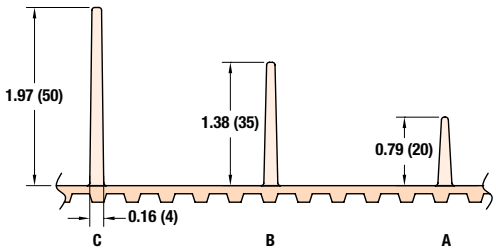


### Specifications

- Base Belt Material: Belt 3P, 4.5 mm (0.175 in) thick, high friction FDA approved urethane, 195°F (91°C) maximum part temperature
- Cleat spacing in 10 mm increments
- Cleats are centered over tooth
- Minimum cleat spacing is approximately 50 mm (1.97 in) Consult Factory.

**NOTE:** 2200 Precision Move cleated belt widths 457 mm (18 in) and over will have a 20 mm (3/4 in) gap in the center cleats and use a return assembly that has a center support bearing.

**Dim** = mm (in)

## ALL BELTS FULLY CONTAINED IN UHMW GUIDING

FOR MAINTENANCE FREE TRACKING

## OPEN FRAME CONSTRUCTION

FOR WATER AND CHEMICAL DRAINAGE AND AIR COOLING

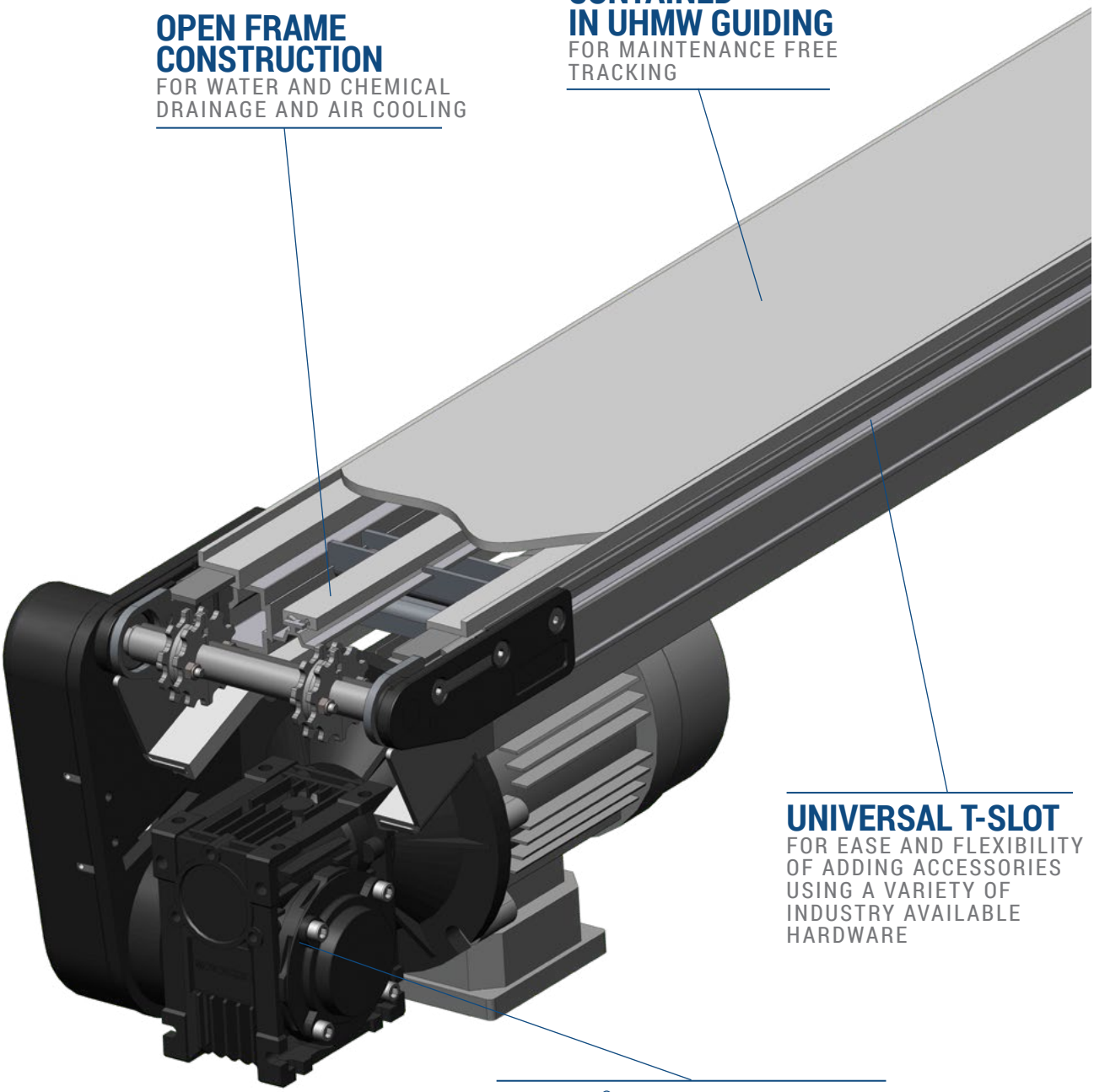

## UNIVERSAL T-SLOT

FOR EASE AND FLEXIBILITY OF ADDING ACCESSORIES USING A VARIETY OF INDUSTRY AVAILABLE HARDWARE

## eDRIVE®

LOW INERTIA ROTOR ALUMINUM BODY MOTORS PROVIDE LOWER TEMPERATURES IN SMALLER PACKAGE

## UNIVERSAL DRIVE

SINGLE PART NUMBER MOTOR/MOUNT/DRIVE PACKAGE COVERS ALL SPEED, LOAD AND MOUNTING POSITIONS FOR END DRIVE CONVEYORS

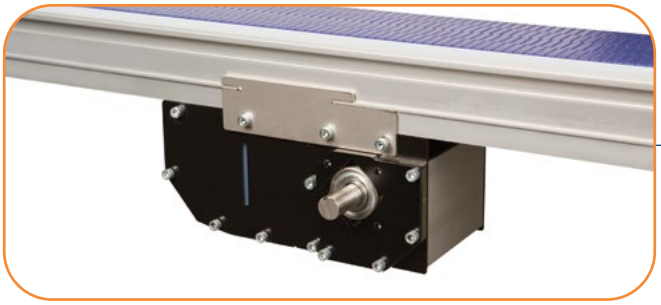

## CENTER DRIVE OPTION

FREES UP SPACE ON BOTH ENDS OF THE CONVEYOR

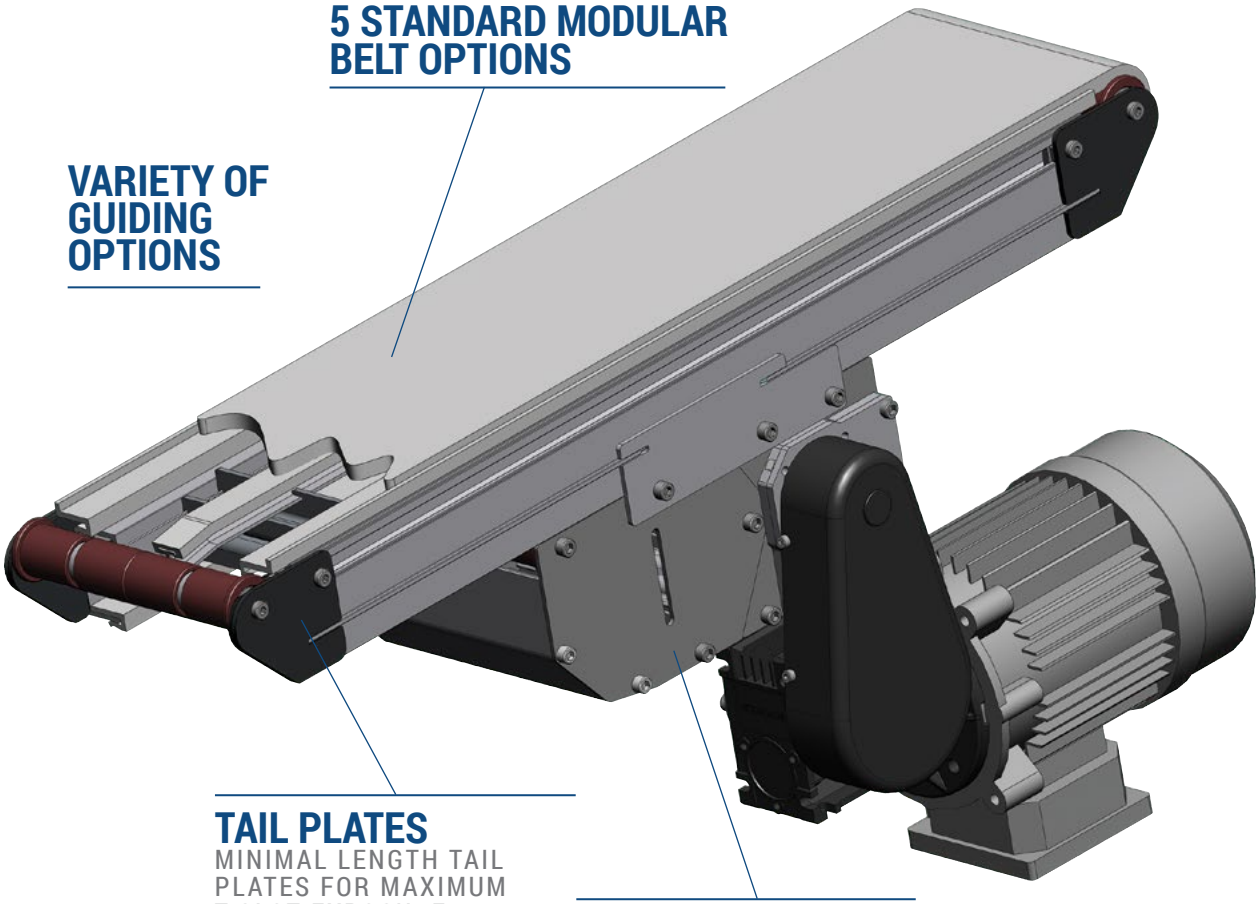

## 7.9 MM (0.31 IN) NOSEBAR TAIL OPTION

FOR SMALL PART TRANSFERS

Micropitch Belt

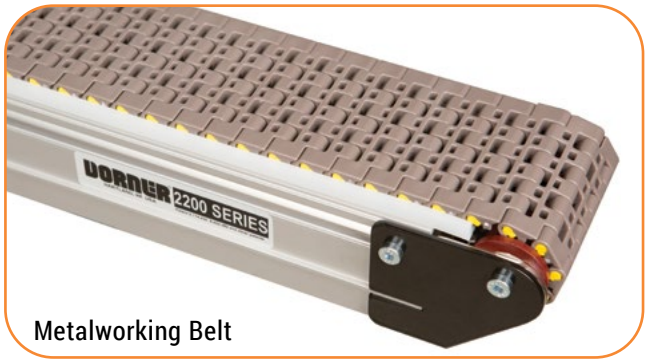

Metalworking Belt

## Specifications

- Loads up to 68 kg (150 lbs)*
- Belt speeds up to 76 m/min (250 ft/min)
- Belt widths: 76 to 610 mm (3 to 24 in)**
- Conveyor lengths: 457 to 9,144 mm (18 in to 30 ft)
- Belt options:

  Micropitch (General Purpose) Belts
  - 8 mm (0.33 in) micropitch modular belt
  - 43.2 mm (1.70 in) pitch diameter 17 tooth drive pulley turns approximately 136 mm (5.35 in) of belt per revolution

  Metalworking Belts
  - 15 mm (0.60 in) pitch modular belt
  - 47.8 mm (1.88 in) pitch diameter 10 tooth drive pulley turns approximately 150 mm (5.91 in) of belt per revolution
- 12 mm diameter integral drive shaft
- Fully encapsulated in frame belt return

**STANDARD FEATURE:**
**Open Frame Design**
for water and chemical drainage and air cooling

**OPTIONAL: 7.9 mm (0.31 in)**
**Nose Bar Transfer**
Belt Speed up to 53.3 m/min (175 ft/min) (Micropitch Modular Belt only)

**2200 Series Modular Belt End Drive Conveyor**

22 MT E M WW - LLLL 1 1 A PP PP BB - X $T^1$ $T^2$ $T^3$ $T^4$

- **Conveyor Tail Options X** (if required) *See Drive Shaft Position Chart on next page
  - **A** = Drive Shaft ($T^1$ only)
  - **D** = Drive Shaft ($T^2$ only)
  - **O** = No Shaft
  - **K** = Keyed Auxiliary Shaft ($T^1$ and $T^2$ only)
  - **S** = Stub Shaft ($T^1$ and $T^2$ only)
- **Belt Type**
- **Profile (D side)**
- **Profile (A side)**
- **Flow/Drive Shaft Position: A or D**
- **Infeed Tail Code: 0** = Standard idler, **1** = Nose Bar
- **Mounting Bracket Options: 1** = Conveyor to include mounting brackets, **3** = Conveyor not to include mounting brackets
- **Conveyor Length Reference:** LL.LL in feet
- **Conveyor Width Reference**
- **Documentation Language: M** = US, **U** = Europe

* Conveyor load capacity depends on conveyor size, incline, motor position, accumulated loads and other factors.
** Belt selection limits width options

Order gearmotor mounting packages and gearmotors separately, see pages 73-78
For support stands and accessories, see pages 90-95

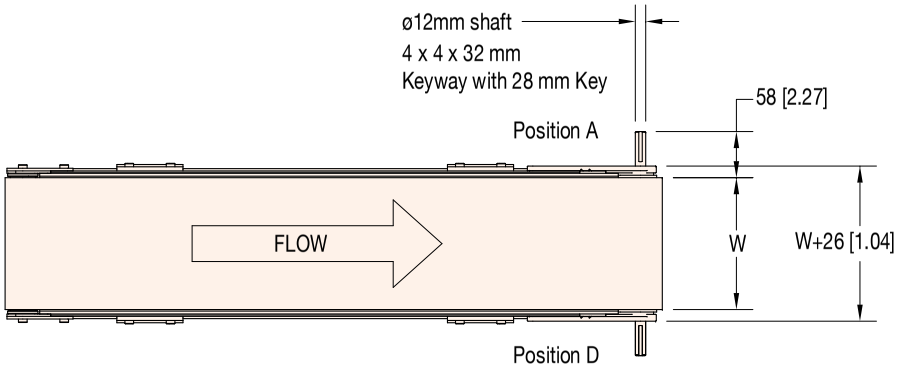


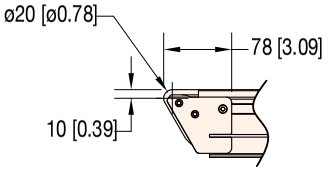


**OPTIONAL NOSE BAR TRANSFER**

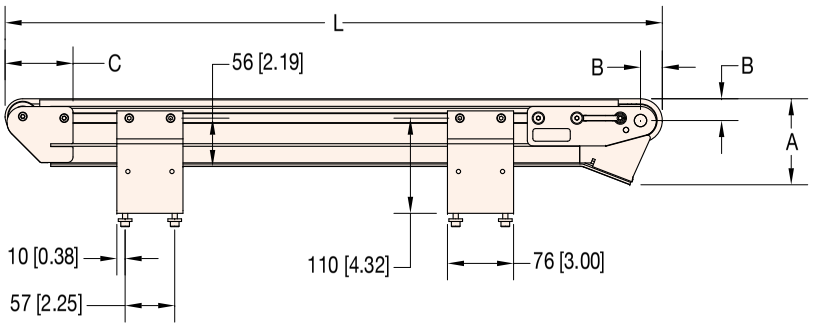


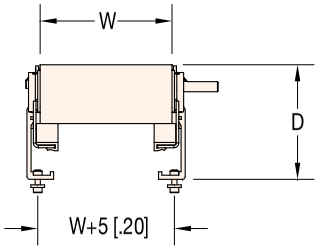


A=99 [3.90] FOR MICROPITCH BELT
102 [4.00] FOR METALWORKING BELT
B=25 [.99] FOR MICROPITCH BELT
28 [1.09] FOR METALWORKING BELT

C=78 [3.08] FOR MICROPITCH BELT
81 [3.18] FOR METALWORKING BELT
D=132 [5.20] FOR MICROPITCH BELT
135 [5.32] FOR METALWORKING BELT

**W** = Conveyor Belt Width **Dim** = mm (in)

| Standard Micropitch Sizes | | | | | | |
|---|---|---|---|---|---|---|
| **Conveyor Width Reference** | 04 | 06 | 08 | 12 | 18 | 24 |
| **Conveyor Belt Width (W)** | 102 mm (4 in) | 152 mm (6 in) | 203 mm (8 in) | 305 mm (12 in) | 457 mm (18 in) | 610 mm (24 in) |
| **Conveyor Length Reference** | 0150 | 0001 increments **up to...** | | | | 3000 |
| **Conveyor Length (L)** | 457 mm (1.5 ft) | 3 mm (0.1 in) increments **up to...** | | | | 9144 mm (30 ft) |
| **Standard Metalworking Sizes** | | | | | | |
| **Conveyor Width Reference** | 03 | 06 | 09 | 12 | 18 | 24 |
| **Conveyor Belt Width (W)** | 76 mm (3 in) | 152 mm (6 in) | 229 mm (9 in) | 305 mm (12 in) | 457 mm (18 in) | 610 mm (24 in) |
| **Conveyor Length Reference** | 0150 | | 0001 increments **up to...** | | 3000 | |
| **Conveyor Length (L)** | 457 mm (1.5 ft) | | 3 mm (0.1 in) increments **up to...** | | 9144 mm (30 ft) | |

**DRIVE SHAFT POSITION**

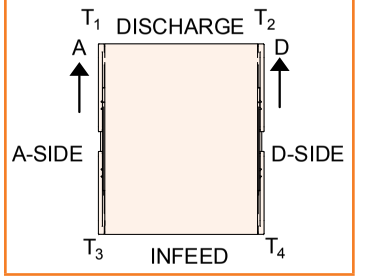

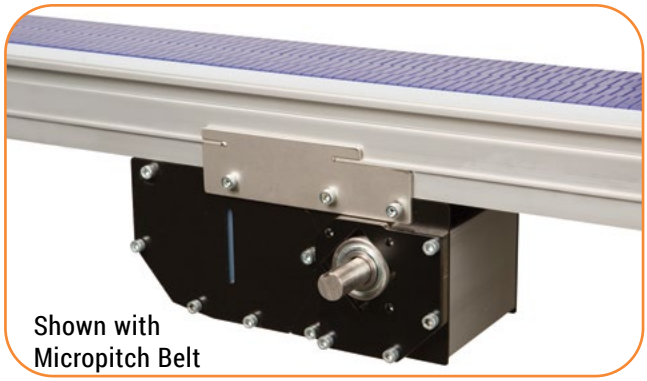

Shown with Micropitch Belt

## Specifications

- Loads up to 68 kg (150 lbs)*
- Belt speeds up to 76 m/min (250 ft/min)
- Belt widths: 76 to 610 mm (3 to 24 in)**
- Conveyor lengths: 813 to 9,144 mm (32 in to 30 ft)
- Belt options:

  Micropitch (General Purpose) Belts
  - 8 mm (0.33 in) micropitch modular belt
  - 43.2 mm (1.70 in) pitch diameter 17 tooth drive pulley turns approximately 136 mm (5.35 in) of belt per revolution

  Metalworking Belts
  - 15 mm (0.60 in) pitch modular belt
  - 47.8 mm (1.88 in) pitch diameter 10 tooth drive pulley turns approximately 150 mm (5.91 in) of belt per revolution
- 20 mm (3/4 in) diameter integral drive shaft
- Fully encapsulated in frame belt return

**STANDARD FEATURE:**
**Open Frame Design**
for water and chemical drainage and air cooling

**OPTIONAL: 7.9 mm (0.31 in)**
**Nose Bar Transfer**
Belt Speed up to 1 53.3 m/min (75 ft/min)(Micropitch Modular Belt only)

**2200 Series Modular Belt Center Drive Conveyor**

22 MT D M WW - LLLL 1 1 1 A PP PP BB - LL

- **Length from Discharge End to Drive Module** (LL in inches)
- **Belt Type**
- **Profile (D side)**
- **Profile (A side)**
- **Drive Shaft Position: A or D**
- **Infeed Tail Code: 0** = Standard idler, **1** = Nose Bar
- **Discharge Tail Code: 0** = Standard idler, **1** = Nose Bar
- **Mounting Bracket Options: 1** = Conveyor to include mounting brackets, **3** = Conveyor not to include mounting brackets
- **Conveyor Length Reference:** LL.LL in feet
- **Conveyor Width Reference**
- **Documentation Language: M** = US, **U** = Europe

* Conveyor load capacity depends on conveyor size, incline, motor position, accumulated loads and other factors.
** Belt selection limits width options

Order gearmotor mounting packages and gearmotors separately, see pages 73-78
For support stands and accessories, see pages 90-95

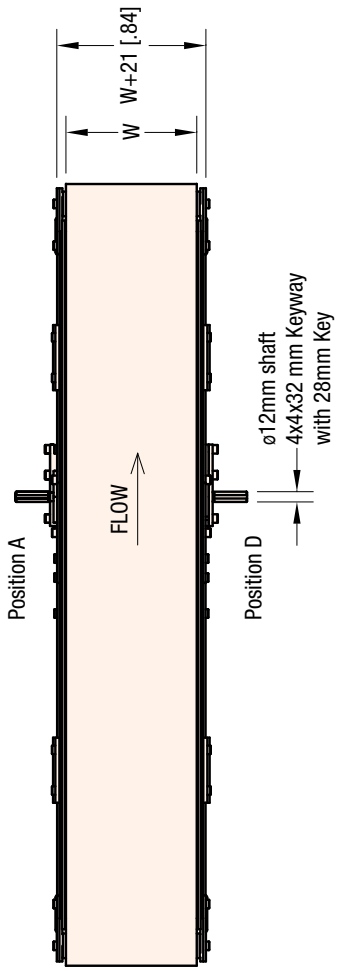


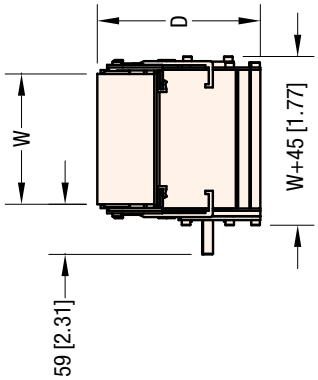


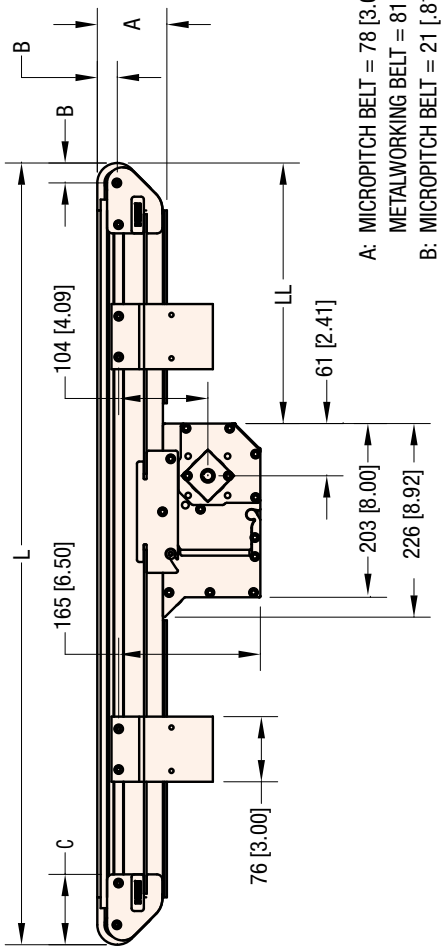


A: MICROPITCH BELT = 78 [3.09]
METALWORKING BELT = 81 [3.19]
B: MICROPITCH BELT = 21 [.81]
METALWORKING BELT = 23 [.92]

C: MICROPITCH BELT = 80 [3.14]
METALWORKING BELT = 82 [3.24]
D: MICROPITCH BELT = 187 [7.37]
METALWORKING BELT = 190 [7.48]

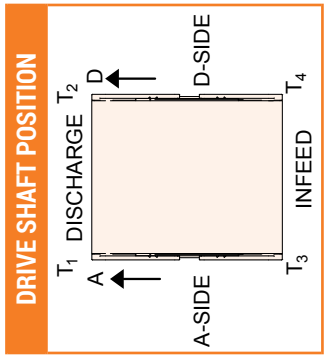


**LL** (Min = 10, MAX = 60) **W** = Conveyor Belt Width **Dim** = mm (in)

| Standard Microptich Sizes | | | | | | | |
|---|---|---|---|---|---|---|---|
| **Conveyor Width Reference** | 04 | 06 | 08 | 12 | 18 | 24 |
| **Conveyor Belt Width (W)** | 102 mm (4 in) | 152 mm (6 in) | 203 mm (8 in) | 305 mm (12 in) | 457 mm (18 in) | 610 mm (24 in) |
| **Conveyor Length Reference** | 0150 | 0001 increments **up to...** | | | | 3000 |
| **Conveyor Length (L)** | 813 mm (2.67 ft) | 3 mm (0.1 in) increments **up to...** | | | | 9144 mm (30 ft) |
| **Standard Metalworking Sizes** | | | | | | |
| **Conveyor Width Reference** | 03 | 06 | 09 | 12 | 18 | 24 |
| **Conveyor Belt Width (W)** | 76 mm (3 in) | 152 mm (6 in) | 229 mm (9 in) | 305 mm (12 in) | 457 mm (18 in) | 610 mm (24 in) |
| **Conveyor Length Reference** | 0150 | 0001 increments **up to...** | | | 3000 | |
| **Conveyor Length (L)** | 813 mm (2.67 ft) | 3 mm (0.1 in) increments **up to...** | | | 9144 mm (30 ft) | |

Shown with Micropitch Belt

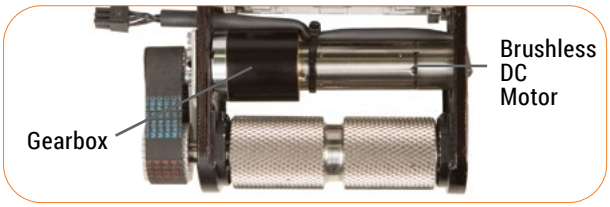


## Specifications

- Conveyor Load Capacity (non-accumulated, evenly distributed)
  - 2 to 20 ft/min up to 75lbs
  - 3 to 28 ft/min up to 50 lbs
  - 7 to 69 ft/min up to 30 lbs
- Belt speeds: Variable Speed (4) Speed Options
  - 0.6 to 6.1 m/min (2 to 20 ft/min)
  - 0.9 to 8.5 m/min (3 to 28 ft/min)
  - 2.1 to 21 m/min (7 to 69 ft/min)
- Belt widths: 76 to 610 mm (3 to 24 in)**
- Conveyor lengths: 457 to 3,048 mm (18 in to 10 ft)
- Indexing capable – Up to 30 indexes per minute
- Belt options:
  Micropitch (General Purpose) Belts
  - 8 mm (0.33 in) micropitch modular belt
  - 43.2 mm (1.70 in) pitch diameter 17 tooth drive pulley turns approximately 136 mm (5.35 in) of belt per revolution

  Metalworking Belts
  - 15 mm (0.60 in) pitch modular belt
  - 47.8 mm (1.88 in) pitch diameter 10 tooth drive pulley turns approximately 150 mm (5.91 in) of belt per revolution
- Fully encapsulated in frame belt return

**STANDARD FEATURE:**
**Open Frame Design**
for water and chemical drainage and air cooling

**OPTIONAL: 7.9 mm (0.31 in)**
**Nose Bar Transfer**
Belt Speed up to 1 53.3 m/min (75 ft/min)
(Micropitch Modular Belt only)

**2200 Series Modular Belt iDrive Conveyor**

22 MT E M WW - LLLL 1 1 A PP PP BB - FD C P S

- **Speed Range:** **B** = 7-69 FPM, **C** = 3-28 FPM, **D** = 2-20 FPM
- **Power Supply:** **P** = Power Supply Included, **N** = No power supply
- **Control Type:** **M** = Mounted Full Control, **Q** = Remote Start/Stop w/6' cord, **R** = Remote Start/Stop w/30' cord
- **Integrated Frame Drive**
- **Belt Type**
- **Profile (D side)**
- **Profile (A side)**
- **Flow/Drive Shaft Position:** **A or D** *See Drive Shaft Position Chart on next page
- **Infeed Tail Code:** **0** = Standard idler, **1** = Nose Bar
- **Mounting Bracket Options:** **1** = Conveyor to include mounting brackets, **3** = Conveyor not to include mounting brackets
- **Conveyor Length Reference:** LL.LL in feet
- **Conveyor Width Reference**
- **Documentation Language:** **M** = US, **U** = Europe

* Conveyor load capacity depends on conveyor size, incline, motor position, accumulated loads and other factors.
** Belt selection limits width options

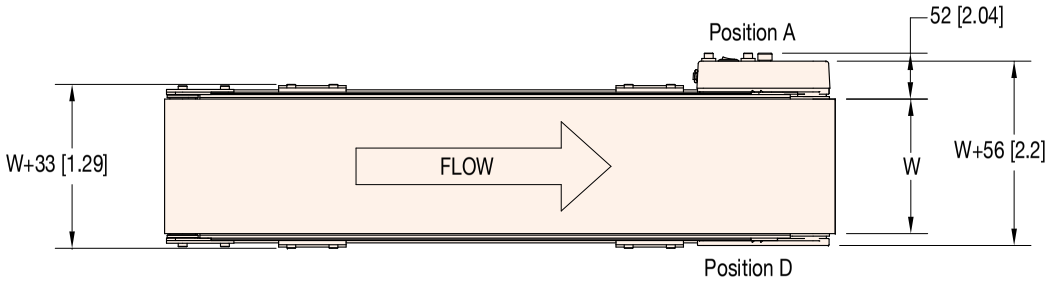


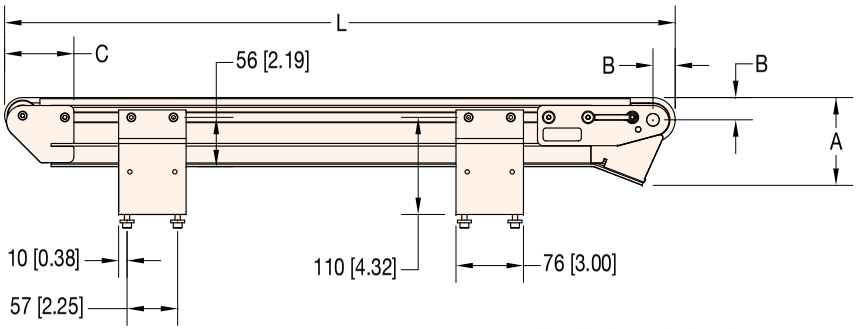


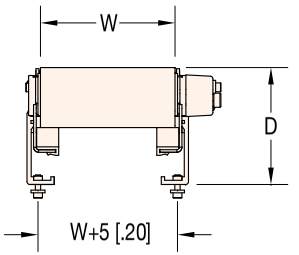


A=99 [3.90] FOR MICROPITCH BELT
102 [4.00] FOR METALWORKING BELT
B=25 [.99] FOR MICROPITCH BELT
28 [1.09] FOR METALWORKING BELT

C=78 [3.08] FOR MICROPITCH BELT
81 [3.18] FOR METALWORKING BELT
D=132 [5.20] FOR MICROPITCH BELT
135 [5.32] FOR METALWORKING BELT

**W** = Conveyor Belt Width **Dim** = mm (in)

| Standard Micropitch Sizes | | | | | | |
|---|---|---|---|---|---|---|
| **Conveyor Width Reference** | 04 | 06 | 08 | 12 | 18 | 24 |
| **Conveyor Belt Width (W)** | 102 mm (4 in) | 152 mm (6 in) | 203 mm (8 in) | 305 mm (12 in) | 457 mm (18 in) | 610 mm (24 in) |
| **Conveyor Length Reference** | 0150 | 0001 increments **up to...** | | | | 3000 |
| **Conveyor Length (L)** | 457 mm (1.5 ft) | 3 mm (0.1 in) increments **up to...** | | | | 9144 mm (30 ft) |
| **Standard Metalworking Sizes** | | | | | | |
| **Conveyor Width Reference** | 03 | 06 | 09 | 12 | 18 | 24 |
| **Conveyor Belt Width (W)** | 76 mm (3 in) | 152 mm (6 in) | 229 mm (9 in) | 305 mm (12 in) | 457 mm (18 in) | 610 mm (24 in) |
| **Conveyor Length Reference** | 0150 | | 0001 increments **up to...** | | 1000 | |
| **Conveyor Length (L)** | 457 mm (1.5 ft) | | 3 mm (0.1 in) increments **up to...** | | 3048 mm (10 ft) | |

**DRIVE SHAFT POSITION**

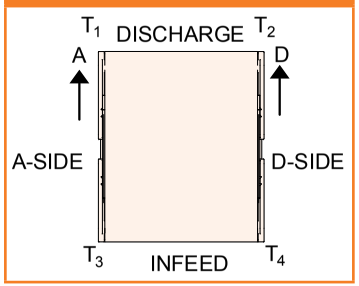

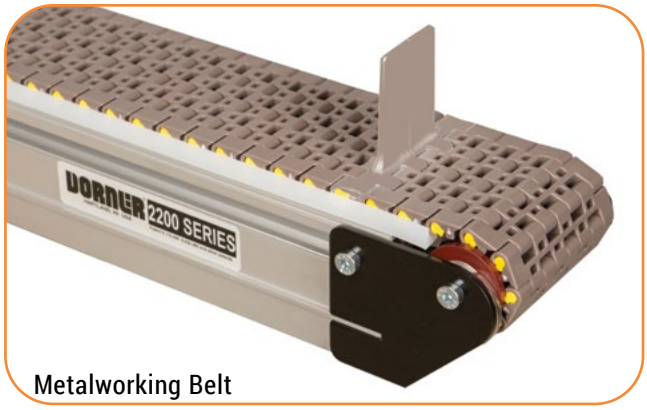

Metalworking Belt

## Specifications

- Loads up to 68 kg (150 lbs)*
- Belt speeds up to 76 m/min (250 ft/min)
- Belt widths: 76 to 610 mm (3 to 24 in)**
- Conveyor lengths: 457 to 9,144 mm (18 in to 30 ft)
- Belt options:

  Metalworking Belt
  - 47.8 mm (1.88 in) pitch diameter 10 tooth drive pulley turns approximately 150 mm (5.91 in) of belt per revolution
- 12 mm diameter integral drive shaft
- Fully encapsulate in frame belt return

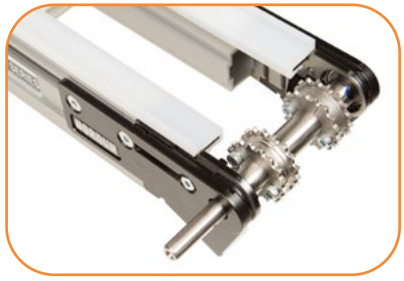

**STANDARD FEATURE: OPEN FRAME DESIGN**

for water and chemical drainage and air cooling

**2200 Series Modular Cleated Belt Conveyor**

22 MT C M WW - LLLL 1 A P A BB SSSS - X $T^1$ $T^2$ $T^3$ $T^4$

- **Conveyor Tail Options X** (if required) *See Drive Shaft Position Chart on next page
  - **A** = Drive Shaft ($T^1$ only)
  - **C** = Drive Shaft ($T^2$ only)
  - **O** = No Shaft
  - **K** = Keyed Auxiliary Shaft
  - **S** = Stub Shaft
  - **M** = Mag Location ($T^3$ or $T^4$ only)
- **Cleat Spacing: SS.SS in inches**
- **Belt Type**
- **Cleat Height**
- **Profile: 0** = Low Side, **2** = 25 mm (1 in) Cleated, **3** = 50 mm (2 in) Cleated
- **Flow/Drive Shaft Position: A or D**
- **Mounting Bracket Options: 1** = Conveyor to include mounting brackets, **3** = Conveyor not to include mounting brackets
- **Conveyor Length Reference:** LL.LL in feet
- **Conveyor Width Reference**
- **Documentation Language: M** = US, **U** = Europe

* Conveyor load capacity depends on conveyor size, incline, motor position, accumulated loads and other factors.
** Belt selection limits width options

Order gearmotor mounting packages and gearmotors separately, see pages 73-78
For support stands and accessories, see pages 90-95

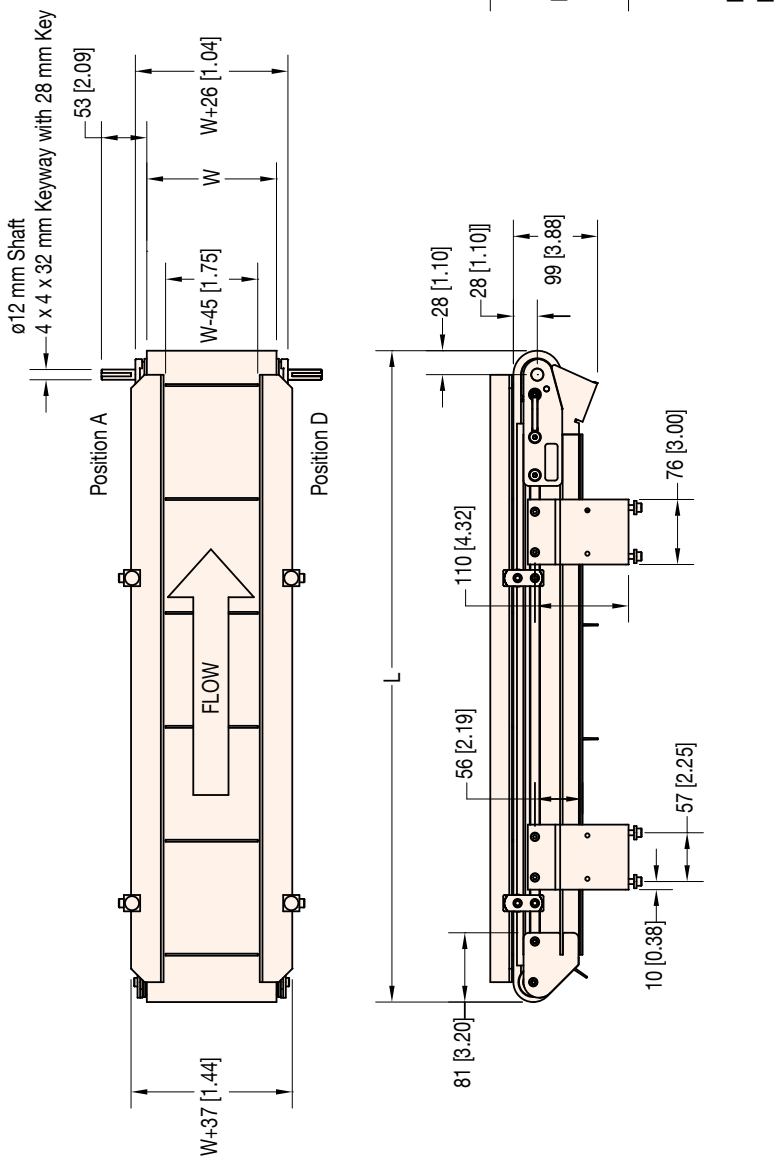


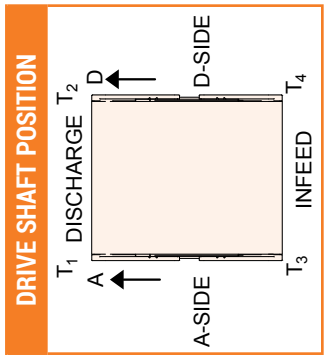


**W** = Conveyor Belt Width **Dim** = mm (in)

| Standard Metalworking Sizes | | | | | | | |
|---|---|---|---|---|---|---|---|
| **Conveyor Width Reference** | 03 | 06 | 09 | 12 | 18 | 24 |
| **Conveyor Belt Width (W)** | 76 mm (3 in) | 152 mm (6 in) | 229 mm (9 in) | 305 mm (12 in) | 457 mm (18 in) | 610 mm (24 in) |
| **Conveyor Length Reference** | 0150 | | 0001 increments **up to...** | | 3000 | |
| **Conveyor Length (L)** | 457 mm (1.5 ft) | | 3 mm (0.1 in) increments **up to...** | | 9144 mm (30 ft) | |

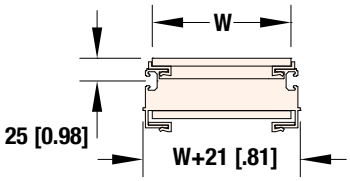


**Profile 01**
Low Side

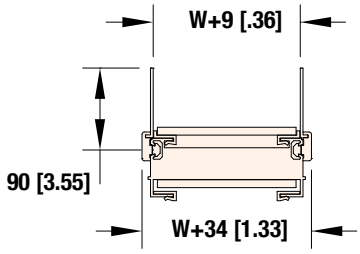


**Profile 04**
76 mm (3 in) Aluminum Side

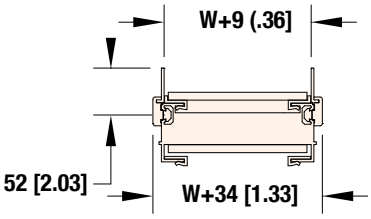


**Profile 05**
38 mm (1.5 in) Aluminum Side

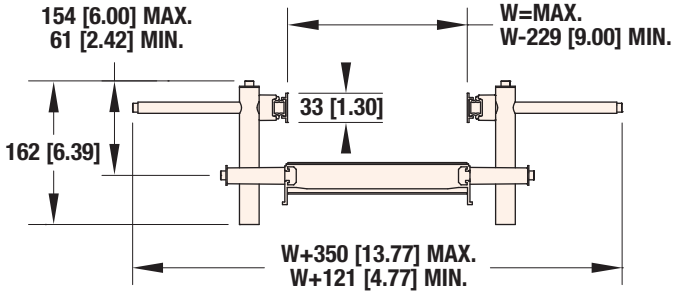


**Profile 13**
Adjustable Guiding
33 mm (1.3 in) HDPE Face

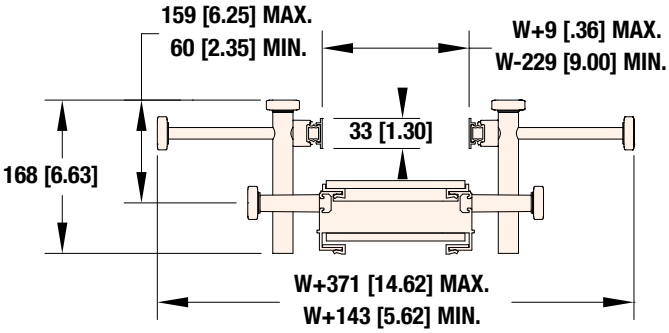


**Profile 14**
Tool-less Adjustable Guiding
33 mm (1.3 in) HDPE Face

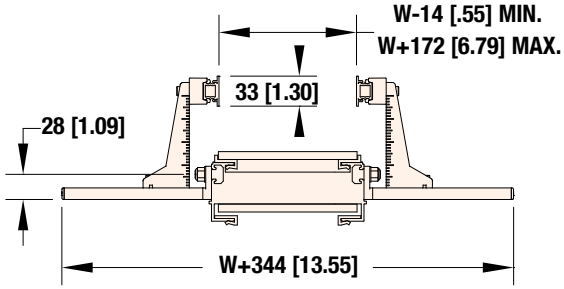


**Profile 16**
Outboard Adjustable Guiding
33 mm (1.3 in) HDPE Face

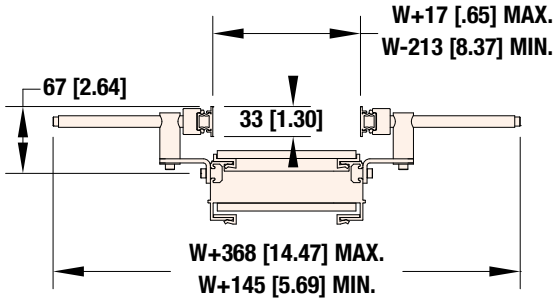


**Profile 19**
Horizontal Adjustable Guiding
33 mm (1.3 in) HDPE Face

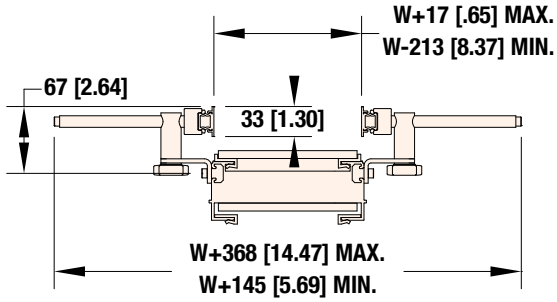


**Profile 20**
Tool-less Horizontal Adjustable Guiding
33 mm (1.3 in) HDPE Face

**W** = Conveyor Belt Width **Dim** = mm (in)

*Due to the wide variety of drive set ups and applications, point of installation guarding is the responsibility of the end user.*

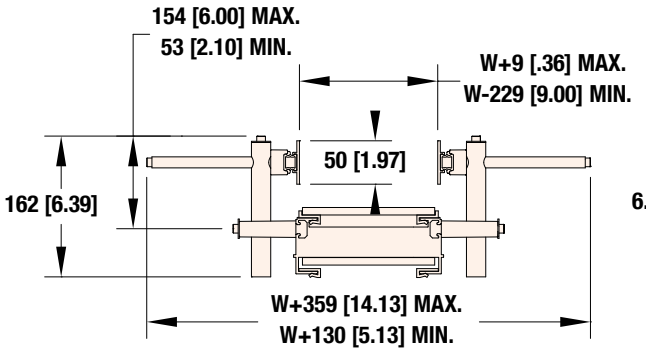


**Profile 33**
Adjustable Guiding
50 mm (2 in) HDPE Face

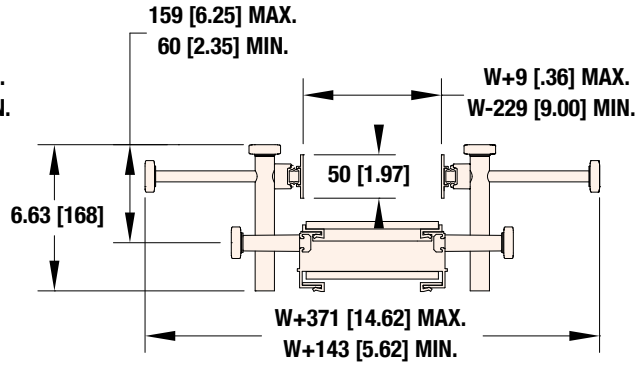


**Profile 34**
Tool-less Adjustable Guiding
50 mm (2 in) HDPE Face

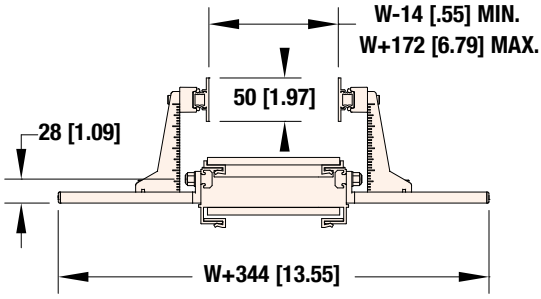


**Profile 36**
Outboard Adjustable Guiding
50 mm (2 in) HDPE Face

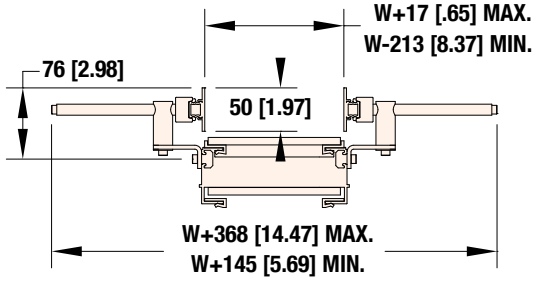


**Profile 39**
Horizontal Adjustable Guiding
50 mm (2 in) HDPE Face

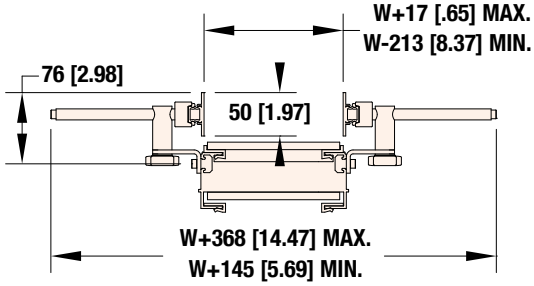


**Profile 40**
Tool-less Horizontal Adjustable Guiding
50 mm (2 in) HDPE Face

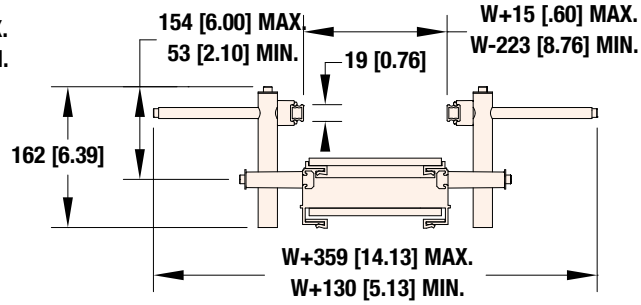


**Profile 43**
Adjustable Guiding
Aluminum Face

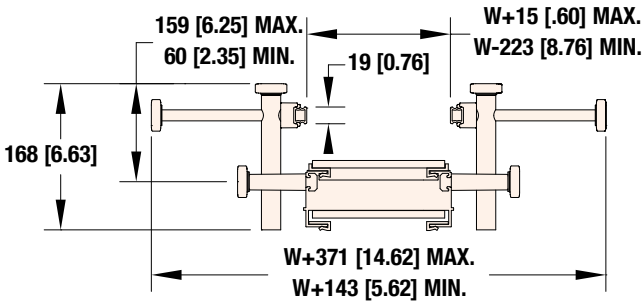


**Profile 44**
Tool-less Adjustable Guiding
Aluminum Face

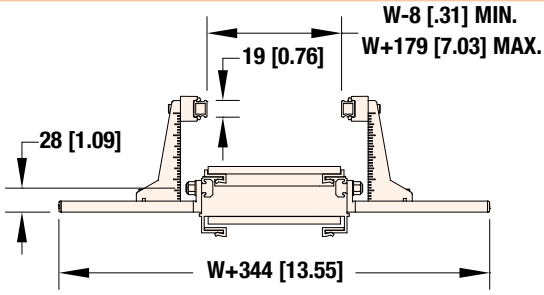


**Profile 46**
Outboard Adjustable Guiding
Aluminum Face

**W** = Conveyor Belt Width **Dim** = mm (in)

*Due to the wide variety of drive set ups and applications, point of installation guarding is the responsibility of the end user.*

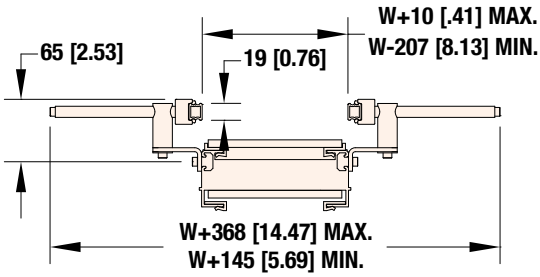


**Profile 49**
Horizontal Adjustable Guiding
Aluminum Face

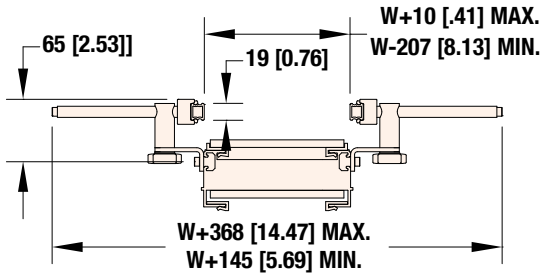


**Profile 50**
Tool-less Horizontal Adjustable Guiding
Aluminum Face

## Standard Modular Belt Selection Guide

| Belt Type | Description | Percent Open | Tooth Pitch | Thickness | Material | Color | Maximum Part Temperature | Coefficient of Friction | FDA Approved | Nose Bar | Cleated | Chemical Resistance |
|---|---|---|---|---|---|---|---|---|---|---|---|---|
| 01 | Micropitch, Closed Mesh | N/A | 8.1 (0.32) | 6 (0.236) | Acetal | Blue | 200 deg F (93 deg C) | 0.25 | X | X | | Good |
| 30 | Metalworking Accumulation, Open Mesh | 26% | 15 (0.59) | 8.7 (0.34) | Acetal | Brown | 180 deg F (82 deg C) | 0.22 | X | | X | Good |
| 31 | Metalworking Chemical Resistant, Open Mesh | 26% | 15 (0.59) | 8.7 (0.34) | Polypropylene | White | 220 deg F (104 deg C) | 0.33 | X | | X | Excellent |
| 40 | Metalworking Accumulation, Closed Mesh | N/A | 15 (0.59) | 8.7 (0.34) | Acetal | Brown | 180 deg F (82 deg C) | 0.22 | X | | X | Good |
| 41 | Metalworking Chemical Resistant, Closed Mesh | N/A | 15 (0.59) | 8.7 (0.34) | Polypropylene | White | 220 deg F (104 deg C) | 0.33 | X | | X | Excellent |

**Note:** White belt is available, contact factory for details.

## Specialty Modular Belt Selection Guide

| Belt Type | Description | Percent Open | Tooth Pitch | Thickness | Material | Color | Maximum Part Temperature | Coefficient of Friction | FDA Approved | Nose Bar | Cleated | Chemical Resistance |
|---|---|---|---|---|---|---|---|---|---|---|---|---|
| 02 | Micropitch, Open Mesh | 34% | 8.1 (0.32) | 6 (0.236) | Acetal | Blue | 200 deg F (93 deg C) | 0.3 | X | X | | Good |
| 32 | Metalworking Heat Resistant, Open Mesh* | 26% | 15 (0.59) | 8.7 (0.34) | Nylon | Black | 375 deg F (190 deg C) | 0.3 | | | | Good |
| 42 | Metalworking Heat Resistant, Closed Mesh* | N/A | 15 (0.59) | 8.7 (0.34) | Nylon | Black | 375 deg F (190 deg C) | 0.3 | | | | Good |

**Note:** White belt is available, contact factory for details.
* Although the belt material can handle temperatures up to 375˚F, the core temperature of belt must not exceed 220˚F. Please consult the factory for details. Also note: the conveyor wearstrip material located under the belt is designed for temperatures up to 175˚F. For applications exceeding these temperatures contact the factory.

## Cleated Belt Profiles

- Metalworking belt conveyors only. See page 42 & 43 for more details.

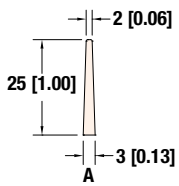


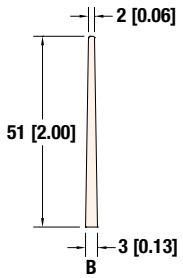


**Dim** = mm (in)

## Gearmotors Mounting Package & Gearmotor Selection Steps

**Step 1:** Select a **Gearmotor Mounting Package.** For End Drive conveyors, select a side, bottom, top, flush or bolster drive mount (pages 48-55). If a Center Drive or Mid Drive conveyor is being outfitted, refer to the Center Drive section on pages 56-57. Be sure to note if it is for a **90˚** or **Parallel Shaft Gearmotor.**

**Step 2:** Using **Belt Speed and Load** Requirements, determine the required **Gearmotor Type** (Light, Heavy or Standard) for your application using the chart below.

**Step 3:** Find the appropriate set of Belt Speed Charts (pages 51, 52, 54, 55, 57 and 58) for the Mounting Package you selected and choose between the **Fixed** or **Variable Speed** chart.

**Step 4:** Go down the first column of the Belt Speed Chart and locate the required **Belt Speed** for your application. If the desired belt speed is not listed, round up to the next higher speed. (Dorner offers much more than just the belt speeds listed in the tables, contact the factory for complete details)

**Step 5:** From the row containing your required **Belt Speed,** check to be sure that speed is available for the **Mount Package** you chose. (End Drive Only - Top, Bottom or Side)

**Step 6:** Use the Drive / Driven Pulley Kit combination to complete your Mounting Package Part Number

**Step 7:** Note the **RPM from Gearmotor,** it will be needed to select the correct Gearmotor from the Gearmotor Chart.

**Step 8:** Reference the **Gearmotor Chart #** to locate a compatible Gearmotor Chart on pages 59-64. Be sure to select a Gearmotor Chart to match your **Gearmotor Type** (Light, Standard or Heavy) and your **Mounting Package** while meeting your electrical requirements. (Red = Parallel Shaft or Blue = 90˚)

**Step 9:** Using the **RPM from Gearmotor** (Step 6), locate the **Part Number** for your Gearmotor from the Gearmotor Table.

| GEARMOTOR TYPE: Light Load / Standard Load / Heavy Load | Conveyor Load - Kg )Lbs) | | | | | | | | | | | |
|---|---|---|---|---|---|---|---|---|---|---|---|---|
| Belt Speed - m/min (Ft/min) | (4.5 (10) | 9.1 (20) | 13.6 (30) | 18.2 (40) | 22.7 (50) | 27.3 (60) | 31.8 (70) | 36.4 (80) | 40.9 (90) | 45.5 (100) | 50 (110) | 54.5 (120) |
| 0-4.6 (0-15) | | | | | | | | | | | | |
| 4.9-9.1 (16-30) | | | | | | | | | | | | |
| 9.5-13.7 (31-45) | | | | | | | | | | | | |
| 14-18.3 (46-60) | | | | | | | | | | | | |
| 18.6-22.9 (61-75) | | | | | | | | | | | | |
| 23.2-27.4 (76-90) | | | | | | | | | | | | |
| 27.7-33.5 (91-110) | | | | | | | | | | | | |
| 33.8-39.6 (111-130) | | | | | | | | | | | | |
| 39.9-45.7 (131-150) | | | | | | | | | | | | |
| 46-53.4 (151-175) | | | | | | | | | | | | |
| 53.7-61 (176-200) | | | | | | | | | | | | |
| 61.3-68.6 (201-225) | | | | | | | | | | | | |
| 68.9-76.2 (226-250) | | | | | | | | | | | | |
| 76.5-83.8 (251-275) | | | | | | | | | | | | |

**Gearmotor Mounting Package Selection Guide**

Use this guide as a reference when selecting Gearmotor Mounting Packages

| MOUNT PACKAGE | APPLICATION: Wet Products / Environments | 76 (3 in) and taller products | Manual / Automated Assembly | Table top mounting | Tight machine interface | Aesthetics | Driving multiple conveyors | Clearance at discharge | Operator Ergonomics | Test and Inspect | Metal Forming |
|---|---|---|---|---|---|---|---|---|---|---|---|
| Side Mount Package | X | X | | X | | | | X | | | |
| Top Mount Package | X | | | X | | | | X | | | |
| Bottom Mount Package | | X | X | | | X | | | X | X | |
| Center Drive Conveyor | | | | | X | | | X | X | | |
| Flush Mount | | | | | | | | X | X | | |
| Bolster Mount Package | | | | | | | X | | | | X |
| Common Drive Package | | | | | | | X | | | | |

## Specifications

- Complete package including motor, mount package, and controller
- Compatible with all 2200 Series End Drive Conveyors including Belted, Modular Belt, and Precision Move
- 21 unique mounting positions including 12 outboard positions and 9 inboard positions
- Belt speed = Variable 1.5 to 70.1 m/min (5-230 ft/min)
- Load Capacity:
  - Up to 36.3 kg (80 lbs) for belt speeds to 45.7 m/min (150 ft/min)
  - Up to 18.1 kg (40 lbs) for belt speeds to 70.1 m/min (230 ft/min)

## Motor:

- Transverse Flux Motor technology
  - Small form factor motor eliminates gearbox
  - High torque at low speeds
- Provides constant output torque from 10 to 300 rpm
- 300 Watt
- Totally Enclosed Non-ventilated
- IP 54
- 89% efficient
- CE Certified
- UL Listed
- RoHS Compliant

**STANDARD FEATURE:**

Mounts in Multiple Positions

## Variable Speed Controller:

- Nema 1 / IP 20 Enclosure
- Input Voltage
- 115V, 1 Phase, 60 Hz
- 200-240V, 1 or 3 Phase, 47 to 63 Hz
- Includes membrane keypad for start/stop and speed control
- Multi-setting parameter menu
- Discrete I/O control capable
- Includes digital readout for speed and parameter setting
- 115 V , 1 Phase unit includes power cord
- 200-240 V units, input power wiring by others
- CE Certified (EMI Filter by others)
- UL Listed
- RoHS Compliant

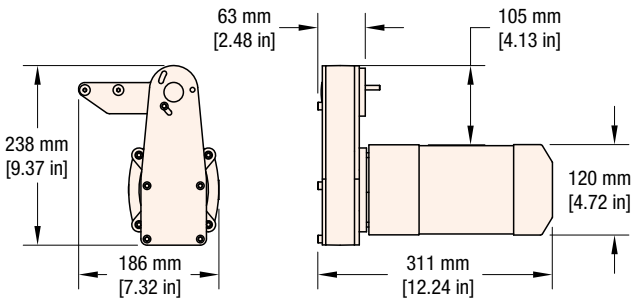


Standard Load Parallel Shaft Gearmotor

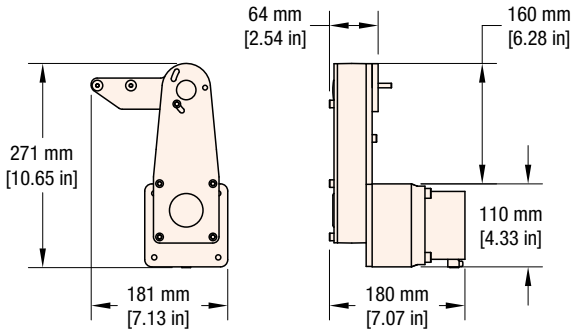


Brushless DC Parallel Shaft Gearmotor

| Part Number | Input voltage | Input phase | Input Hz | Peak Input Amps | Motor Power | Motor Face | Reversing | Motor RPM* | In-Lbs | N-m |
|---|---|---|---|---|---|---|---|---|---|---|
| 22UM1 | 115 | 1 | 47-63 | 10 | 0.5 Hp (3.7 Kw) | NEMA 100 | Yes | 10 - 300/500 | 49/44 | 5.5/4.9 |
| 22UM2 | 208/230 | 1 or 3 | 47-63 | 5 | 0.5 Hp (3.7 Kw) | NEMA 100 | Yes | 10 - 300/500 | 49/44 | 5.5/4.9 |

**Dim** = mm (in)

## Side Mount Package, 90° Gearmotor

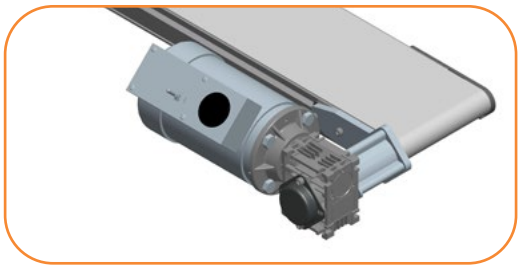

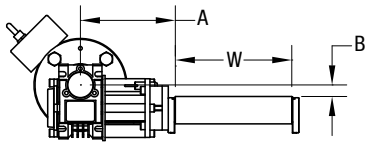


| | | |
|---|---|---|
| **A:** | 2200 = 123 [4.85] | 2700 = 145 [5.71] |
| **B:** | 2200 = 15 [0.59] | 2700 = 6 [0.23] |
| **C:** | 2200 = 27 [1.05] | 2700 = 12 [0.48] |

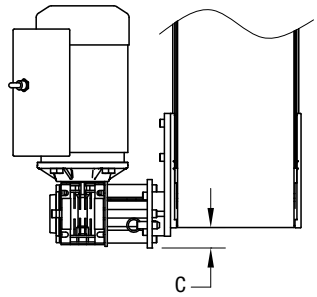


• Includes gearmotor mounting bracket, coupling, coupling guard and mounting hardware

## Bottom Mount Package, 90° Gearmotor (2200 only*)

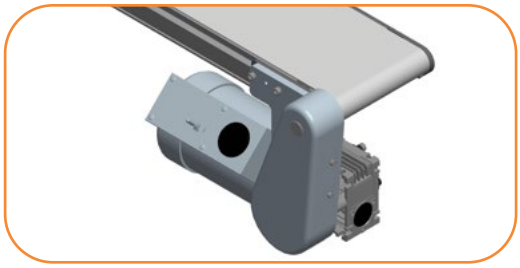

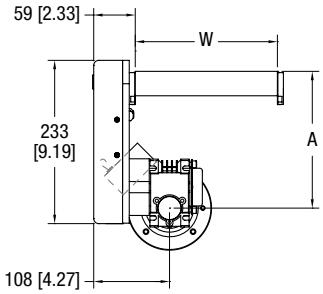


**A:** Standard Load Flat Belt = 138 (5.43)
Standard Load Cleated Belt = 198 (7.89)

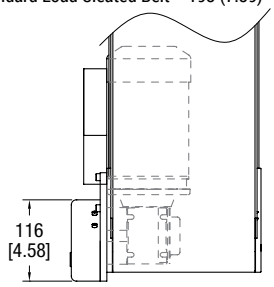


• Includes gearmotor mounting bracket, timing belt and pulleys, guard cover and mounting hardware

*for 2700 see flush bottom mount

## Top Mount Package, 90° Gearmotor

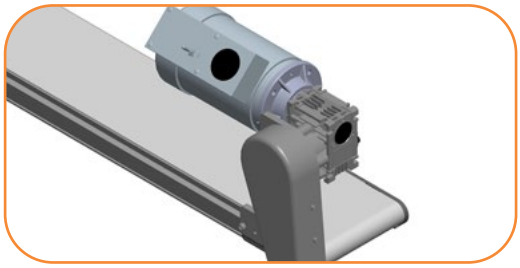

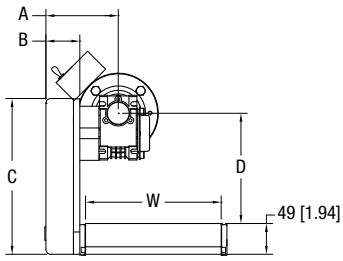


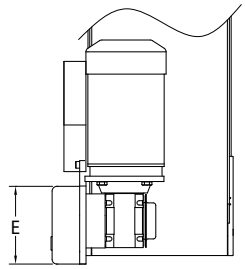


• Includes gearmotor mounting bracket, timing belt and pulleys, guard cover and mounting hardware

| | | |
|---|---|---|
| **A:** | 2200 = 108 [4.27] | 2700 = 105 [4.12] |
| **B:** | 2200 = 51 [2.00] | 2700 = 49 [1.94] |
| **C:** | 2200 = 233 [9.19] | 2700 = 235 [9.25] |
| **D:** | 2200 = 162 [6.40] | 2700 = 160 [6.31] |
| **E:** | 2200 = 116 [4.58] | 2700 = 103 [4.06] |

## 90° Gearmotor Location Options

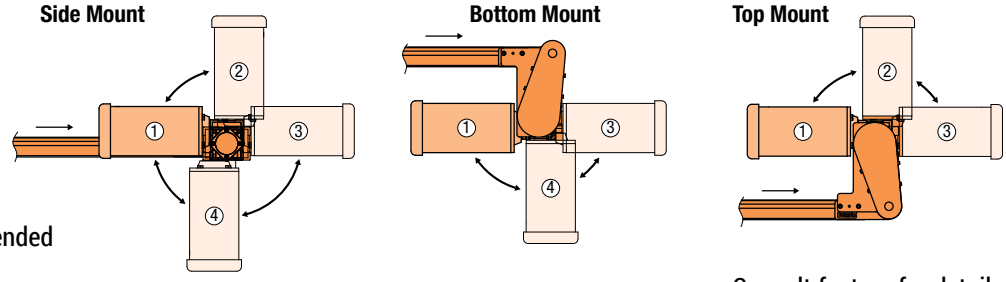


**Note:** Position 1 recommended

Consult factory for details

Note: Conveyor and gearmotor are not included in the mounting package and must be ordered separately. **W** = Conveyor Belt Width **Dim** = mm (in)

For ordering information, see page 66

## Side Mount Package, Parallel Shaft Gearmotor (2200 only)

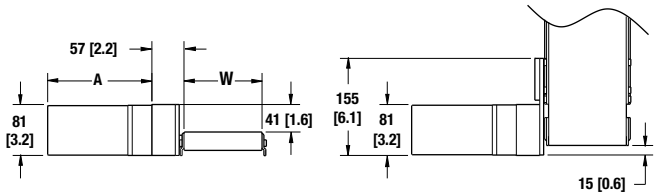


A: Light Load, Fixed Speed and VFD Variable Speed = 117 (4.6)
Light Load, DC Variable = 170 (6.7)
Light Load CE Fixed Speed = 183 (7.2)

**Light load gearmotors only**

- Includes gearmotor mounting bracket, coupling, coupling guard and mounting hardware

## Bottom Mount Package, Parallel Shaft Gearmotor (2200 only*)

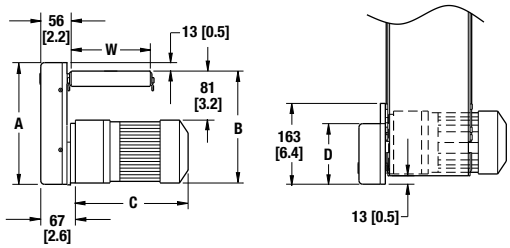


A: Light Load Flat Belt = 175 (6.9)
Light Load Cleated Belt = 226 (8.9)
Standard Load Flat Belt = 234 (9.2)
Standard Load Cleated Belt = 234 (9.2)
B: Light Load Flat Belt = 158 (6.2)
Light Load Cleated Belt = 211 (8.3)
Standard Load Flat Belt = 216 (8.5)
Standard Load Cleated Belt = 262 (10.3)

C: Light Load, Fixed Speed and VFD Variable Speed = 117 (4.6)
Light Load, DC Variable Speed = 170 (6.7)
Standard Load = 267 (10.5)
D: Light Load Flat Belt = 155 (6.1)
Light Load Cleated Belt = 142 (5.6)
Standard Load Flat Belt = 116 (4.6)
Standard Load Cleated Belt = 116 (4.6))

- Includes gearmotor mounting bracket, timing belt and pulleys, guard cover and mounting

*for 2700 see flush bottom mount hardware

## Top Mount Package, Parallel Shaft Gearmotor

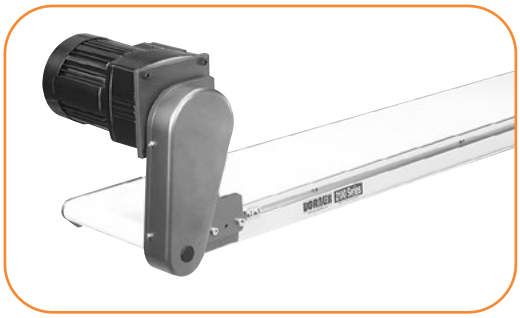

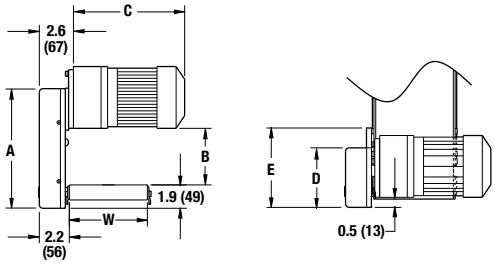


- Includes gearmotor mounting bracket, timing belt and pulleys, guard cover and mounting hardware

A: Light Load = 226 (8.9)
Standard Load = 234 (9.2)

B: Light Load = 100 (3.9)
Standard Load 2200 = 96 (3.8)
Standard Load 2700 = 83 (3.3)

C: Light Load, Fixed Speed and VFD Variable Speed = 117 (4.6)
Light Load, DC Variable Speed = 170 (6.7)
Standard Load = 267 (10.5)
D: Light Load = 142 (5.6)
Standard Load 2200 = 116 (4.6)
Standard Load 2700 = 103 (4.1)
E: 2200 = 155 (6.1)
2700 = 189 (7.4)

Note: Conveyor and gearmotor are not included in the mounting package and must be ordered separately. **W** = Conveyor Belt Width **Dim** = mm (in)

For ordering information, see page 66

## 2200 End Drive Belt Speed

**Fixed Speed**

| 2200 Belt | | 2200 Precision Move | | 2200 Modular Belt | | | | RPM From Gearmotor | Mount Package | | Pulley Kit | | Gearmotor Chart | | |
|---|---|---|---|---|---|---|---|---|---|---|---|---|---|---|---|
| | | | | Micropitch Belts 01 and 02 | | Metalworking Belts 30 thru 42 | | | | | | | | | |
| m/min | ft/min | m/min | ft/min | m/min | ft/min | m/min | ft/min | | Top & Bottom | Side | Drive Pulley | Driven Pulley | Light Load | Standard Load | Heavy Load |
| 0.6 | 2 | 0.7 | 2.3 | 0.8 | 2.6 | 0.9 | 2.9 | 10 | x | | 22 | 32 | | 5 | |
| 0.9 | 3 | 1.1 | 3.5 | 1.2 | 3.9 | 1.3 | 4.3 | 10 | x | | 28 | 28 | | 5 | |
| 1.5 | 5 | 1.8 | 5.8 | 2.0 | 6.5 | 2.2 | 7.2 | 10 | x | | 44 | 22 | | 5 | |
| 1.8 | 6 | 2.1 | 6.9 | 2.4 | 7.8 | 2.6 | 8.6 | 29 | x | | 19 | 32 | | 4 | 12, 13 |
| 3.1 | 10 | 3.5 | 12 | 4.0 | 13.0 | 4.4 | 14.3 | 29 | x | x | 28 | 28 | | 4, 5 | 12, 13 |
| 4.0 | 13 | 4.6 | 15 | 5.2 | 17 | 5.7 | 19 | 42 | x | | 28 | 32 | 1 | | |
| 4.6 | 15 | 5.3 | 17 | 5.9 | 20 | 6.5 | 21 | 42 | x | x | 28 | 28 | 1 | | |
| 4.6 | 15 | 5.3 | 17 | 5.9 | 20 | 6.5 | 21 | 43 | x | x | 28 | 28 | | 4, 19 | 12, 13 |
| 4.9 | 16 | 5.6 | 18 | 6.3 | 21 | 7.0 | 23 | 29 | x | | 44 | 28 | | 4, 5 | 12, 13 |
| 6.4 | 21 | 7.4 | 24 | 8.3 | 27 | 9.2 | 30 | 42 | x | | 32 | 22 | 1 | | |
| 7.3 | 24 | 8.4 | 28 | 9.5 | 31 | 10.5 | 34 | 43 | x | | 44 | 28 | | 4 | 12, 13 |
| 8.8 | 29 | 10.2 | 33 | 11.5 | 38 | 12.6 | 41 | 42 | x | | 44 | 22 | 1 | | |
| 9.2 | 30 | 10.5 | 35 | 11.9 | 39 | 13.1 | 43 | 86 | x | x | 28 | 28 | | 4, 5 | 12, 13 |
| 10.7 | 35 | 12.3 | 40 | 13.9 | 46 | 15.3 | 50 | 100 | x | x | 28 | 28 | 1 | 19 | |
| 14.6 | 48 | 16.8 | 55 | 19.0 | 62 | 20.9 | 69 | 86 | x | | 44 | 28 | | 4, 5 | 12, 13 |
| 16.8 | 55 | 19.3 | 63 | 21.8 | 72 | 24.0 | 79 | 100 | x | | 44 | 28 | 1 | | |
| 18.6 | 61 | 21.4 | 70 | 24.2 | 79 | 26.6 | 87 | 173 | x | x | 28 | 28 | | 4, 5 | 12, 13 |
| 29.0 | 95 | 33.3 | 109 | 37.7 | 124 | 41.4 | 136 | 173 | x | | 44 | 28 | | 4, 5 | 12, 13 |
| 31.7 | 104 | 36.5 | 120 | 41.2 | 135 | 45.4 | 149 | 173 | x | | 48 | 28 | | 4, 5 | 12, 13 |
| 36.9 | 121 | 42.4 | 139 | 48.0 | 157 | 52.8 | 173 | 345 | x | x | 28 | 28 | | 4, 5 | 12, 13 |
| 42.1 | 138 | 48.4 | 159 | 54.7 | 179 | 60.2 | 197 | 345 | x | | 32 | 28 | | 4, 5 | 12, 13 |
| 53.7 | 176 | 61.7 | 202 | 69.8 | 229 | 76.8 | 252 | 345 | x | | 32 | 22 | | 4, 5 | 12, 13 |
| 63.4 | 208 | 73.0 | 239 | 82.5 | 270 | | | 345 | x | | 48 | 28 | | 4, 5 | 12, 13 |
| 73.8 | 242 | 84.9 | 278 | | | | | 345 | x | | 44 | 22 | | 4, 5 | 12, 13 |
| 80.5 | 264 | 92.6 | 304 | | | | | 345 | x | | 48 | 22 | | 4, 5 | 12, 13 |
| CE Gearmotor RPM at 50 Hz. | | | | | | | | | | | | | | | |
| 1.5 | 5 | 1.8 | 5.8 | 2.0 | 6.5 | 2.2 | 7.2 | 23* | x | | 19 | 32 | | 6 | |
| 2.4 | 8 | 2.8 | 9.2 | 3.2 | 10.4 | 3.5 | 11.4 | 23* | x | x | 28 | 28 | | 6 | |
| 3.7 | 12 | 4.2 | 13.8 | 4.8 | 15.6 | 5.2 | 17.2 | 35* | x | x | 28 | 28 | | 6 | |
| 5.8 | 19 | 6.7 | 22 | 7.5 | 25 | 8.3 | 27 | 35* | x | | 44 | 28 | | | |
| 6.4 | 21 | 7.4 | 24 | 8.3 | 27 | 9.2 | 30 | 41* | x | | 32 | 22 | 2 | | |
| 7.6 | 25 | 8.8 | 29 | 9.9 | 33 | 10.9 | 36 | 70* | x | x | 28 | 28 | | 6 | |
| 11.9 | 39 | 13.7 | 45 | 15.5 | 51 | 17.0 | 56 | 70* | x | | 44 | 28 | | 6 | |
| 14.9 | 49 | 17.2 | 56 | 19.4 | 64 | 21.4 | 70 | 140* | x | x | 28 | 28 | | 6 | |
| 15.3 | 50 | 17.5 | 58 | 19.8 | 65 | 21.8 | 72 | 144* | x | x | 28 | 28 | 2 | | |
| 23.5 | 77 | 27.0 | 89 | 30.5 | 100 | 33.6 | 110 | 140* | x | | 44 | 28 | | 6 | |
| 29.3 | 96 | 33.7 | 110 | 38.1 | 125 | 41.9 | 137 | 280* | x | x | 28 | 28 | | 6 | |
| 34.2 | 112 | 39.3 | 129 | 44.4 | 146 | 48.8 | 160 | 280* | x | | 32 | 28 | | 6 | |
| 43.6 | 143 | 50.2 | 164 | 56.7 | 186 | 62.4 | 204 | 280* | x | | 32 | 22 | | 6 | |
| 51.5 | 169 | 59.3 | 194 | 67.0 | 220 | 73.7 | 242 | 280* | x | | 48 | 28 | | 6 | |
| 60.1 | 197 | 69.1 | 227 | 78.1 | 256 | | | 280* | x | | 44 | 22 | | 6 | |
| 65.3 | 214 | 75.1 | 246 | | | | | 280* | x | | 48 | 22 | | 6 | |
| 81.7 | 268 | 94.0 | 308 | | | | | 280* | x | | 60 | 22 | | 6 | |

Cleated Belts operate at maximum 280 ft/min (86 m/min)
Red = Parallel Shaft, Blue = 90˚

Other speeds available. See www.dorner.com and run the DTools program for a full list of belt speeds.

Refer to the Gearmotor Selection Steps on page 55 for instructions on using Belt Speed Charts

## 2700 End Drive Belt Speed

| Fixed Speed | | | | | | | | |
|---|---|---|---|---|---|---|---|---|
| 2700 Belt | | RPM From Gearmotor | Mount Package | | Pulley Kit | | Gearmotor Chart | |
| m/min | ft/min | | Top & Bottom | Side | Drive Pulley | Driven Pulley | Standard Load | Heavy Load |
| 1.9 | 6.2 | 10 | x | x | 28 | 28 | 5 | |
| 2.1 | 6.9 | 10 | x | | 32 | 28 | 5 | |
| 2.8 | 9.2 | 10 | x | | 48 | 32 | 5 | |
| 3.2 | 11 | 10 | x | | 48 | 28 | 5 | |
| 5.5 | 18 | 29 | x | x | 28 | 28 | 4, 5 | 12 |
| 6.2 | 20 | 29 | x | | 32 | 28 | 4, 5 | 12 |
| 8.1 | 27 | 43 | x | x | 28 | 28 | 4 | 12 |
| 8.2 | 27 | 29 | x | | 48 | 32 | 4, 5 | 12 |
| 8.7 | 29 | 46 | x | x | 28 | 28 | 19 | |
| 9.3 | 31 | 43 | x | | 32 | 28 | 4 | 12 |
| 9.4 | 31 | 29 | x | | 48 | 28 | 4, 5 | 12 |
| 9.9 | 33 | 46 | x | | 32 | 28 | 19 | |
| 11 | 36 | 58 | x | x | 28 | 28 | 5 | |
| 12 | 40 | 43 | x | | 48 | 32 | 4, 5 | 12 |
| 13 | 41 | 58 | x | | 32 | 28 | 5 | |
| 13 | 43 | 46 | x | | 48 | 32 | 19 | |
| 14 | 46 | 43 | x | | 48 | 28 | 4 | 12 |
| 15 | 49 | 46 | x | | 48 | 28 | 19 | |
| 16 | 53 | 86 | x | x | 28 | 28 | 4, 5 | 12 |
| 16 | 54 | 58 | x | | 48 | 32 | 5 | |
| 19 | 61 | 86 | x | | 32 | 28 | 4, 5 | 12 |
| 19 | 61 | 58 | x | | 48 | 28 | 5 | |
| 21 | 67 | 109 | x | x | 28 | 28 | 19 | |
| 24 | 77 | 109 | x | | 32 | 28 | 19 | |
| 24 | 80 | 86 | x | | 48 | 32 | 4, 5 | 12 |
| 28 | 91 | 86 | x | | 48 | 28 | 4, 5 | 12 |
| 31 | 101 | 109 | x | | 48 | 32 | 19 | |
| 33 | 107 | 173 | x | x | 28 | 28 | 4, 5 | 12 |
| 35 | 116 | 109 | x | | 48 | 28 | 19 | |
| 37 | 122 | 173 | x | | 32 | 28 | 4, 5 | 12 |
| 41 | 136 | 219 | x | x | 28 | 28 | 19 | |
| 47 | 155 | 219 | x | | 32 | 28 | 19 | |
| 49 | 160 | 173 | x | | 48 | 32 | 4, 5 | 12 |
| 56 | 183 | 173 | x | | 48 | 28 | 4, 5 | 12 |
| 62 | 203 | 219 | x | | 48 | 32 | 19 | |
| 65 | 213 | 345 | x | x | 28 | 28 | 4, 5 | 12 |
| 71 | 232 | 219 | x | | 48 | 28 | 19 | |
| 74 | 244 | 345 | x | | 32 | 28 | 4, 5 | 12 |
| 98 | 320 | 345 | x | | 48 | 32 | 4, 5 | 12 |
| 111 | 366 | 345 | x | | 48 | 28 | 4, 5 | 12 |
| 127 | 415 | 672 | x | x | 28 | 28 | | 12 |
| 145 | 475 | 672 | x | | 32 | 28 | | 12 |
| 190 | 623 | 672 | x | | 48 | 32 | | 12 |
| 217 | 712 | 672 | x | | 48 | 28 | | 12 |
| CE Gearmotor RPM at 50 Hz. | | | | | | | | |
| 2.5 | 8.2 | 23 | x | | 48 | 28 | 6 | |
| 2.9 | 9.5 | 23 | x | | 48 | 32 | 6 | |
| 3.8 | 13 | 35 | x | | 48 | 28 | 6 | |
| 3.8 | 13 | 23 | x | | 32 | 28 | 6 | |
| 4.3 | 14 | 23 | x | x | 28 | 28 | 6 | |
| 4.4 | 14 | 35 | x | | 48 | 32 | 6 | |
| 5.8 | 19 | 35 | x | | 32 | 28 | 6 | |
| 6.6 | 22 | 35 | x | x | 28 | 28 | 6 | |
| 7.7 | 25 | 70 | x | | 48 | 28 | 6 | |
| 8.8 | 29 | 70 | x | | 48 | 32 | 6 | |
| 12 | 38 | 70 | x | | 32 | 28 | 6 | |
| 13 | 43 | 70 | x | x | 28 | 28 | 6 | |
| 15 | 51 | 140 | x | | 48 | 28 | 6 | |
| 18 | 58 | 140 | x | | 48 | 32 | 6 | |
| 23 | 76 | 140 | x | | 32 | 28 | 6 | |
| 26 | 87 | 140 | x | x | 28 | 28 | 6 | |
| 31 | 101 | 280 | x | | 48 | 28 | 6 | |
| 35 | 116 | 280 | x | | 48 | 32 | 6 | |
| 46 | 152 | 280 | x | | 32 | 28 | 6 | |
| 53 | 173 | 280 | x | x | 28 | 28 | 6 | |

Cleated Belts operate at maximum 280 ft/min (86 m/min)
Red = Parallel Shaft, Blue = 90˚

Other speeds available. See www.dorner.com and run the DTools program for a full list of belt speeds.

Refer to the Gearmotor Selection Steps on page 55 for instructions on using Belt Speed Charts

## 2200 End Drive Belt Speed

**Variable Speed**

| 2200 Belt | | 2200 Precision Move | | 2200 Modular Belt: Micropitch Belts 01 and 02 | | 2200 Modular Belt: Metalworking Belts 30 thru 42 | | RPM From Gearmotor | Mount Package | | Pulley Kit | | Gearmotor Chart | | |
|---|---|---|---|---|---|---|---|---|---|---|---|---|---|---|---|
| m/min | Ft/min | m/min | Ft/min | m/min | Ft/min | m/min | Ft/min | | Top & Bottom | Side | Drive Pulley | Driven Pulley | Light Load | Standard Load | Heavy Load |
| 0.1 - 1 | 0.4 - 3.4 | 0.1 - 1.2 | 0.5 - 3.9 | 0.5 - 4.4 | 0.2 - 1.3 | 0.2 - 1.5 | 0.6 - 4.9 | 14 | x | | 22 | 32 | | 10 | |
| 0.2 - 1.5 | 0.6 - 5 | 0.2 - 1.8 | 0.7 - 5.8 | 0.8 - 6.5 | 0.2 - 2 | 0.3 - 2.2 | 0.9 - 7.2 | 14 | x | | 28 | 28 | | 10 | |
| 0.2 - 1.8 | 0.6 - 6 | 0.2 - 2.1 | 0.7 - 6.9 | 0.8 - 7.8 | 0.2 - 2.4 | 0.3 - 2.6 | 0.9 - 8.6 | 29 | x | | 19 | 32 | | 8 | 15, 16 |
| 0.3 - 3.1 | 1 - 10 | 0.4 - 3.5 | 1.2 - 11.5 | 1.3 - 13 | 0.4 - 4 | 0.4 - 4.4 | 1.4 - 14.3 | 29 | x | | 28 | 28 | | 8, 11 | 15, 16 |
| 0.5 - 4.3 | 1.8 - 14 | 0.6 - 4.9 | 2 - 16 | 2 - 18 | 0.7 - 5.6 | 0.8 - 6.1 | 2.6 - 20 | 42 | x | x | 28 | 28 | 3 | 7, 10, 20 | 14 |
| 0.5 - 4.6 | 1.5 - 15 | 0.5 - 5.3 | 2 - 17 | 2 - 20 | 0.6 - 5.9 | 0.7 - 6.5 | 2.1 - 21 | 43 | x | | 28 | 28 | | 9 | 15, 16 |
| 0.8 - 6.7 | 2.6 - 22 | 0.9 - 7.7 | 3 - 25 | 3 - 29 | 1 - 8.7 | 1.1 - 9.6 | 3.7 - 31 | 63 | x | x | 28 | 28 | | 8 | 14 |
| 0.9 - 7 | 2.8 - 23 | 1 - 8 | 3 - 26 | 4 - 30 | 1.1 - 9.1 | 1.2 - 10 | 4 - 33 | 42 | x | | 44 | 28 | 3 | 8 | 14 |
| 1.1 - 9 | 3.5 - 29 | 1.2 - 10 | 4 - 33 | 5 - 38 | 1.4 - 11.5 | 1.5 - 12.6 | 5 - 41 | 83 | x | | 28 | 28 | | 11 | |
| 0.9 - 9 | 3 - 30 | 1.1 - 11 | 3 - 35 | 4 - 39 | 1.2 - 11.9 | 1.3 - 13.1 | 4.3 - 43 | 86 | x | | 28 | 28 | | 8, 11 | 15, 16 |
| 1.6 - 13 | 5.3 - 44 | 1.9 - 15 | 6 - 51 | 7 - 57 | 2.1 - 17.4 | 2.3 - 19.2 | 7.6 - 63 | 125 | x | x | 28 | 28 | | 7, 10, 20 | 14 |
| 1.8 - 15 | 6 - 49 | 2.1 - 17 | 7 - 56 | 8 - 64 | 2.4 - 19.4 | 2.6 - 21.4 | 8.6 - 70 | 139 | x | x | 28 | 28 | 3 | | |
| 1.8 - 18 | 6 - 60 | 2.1 - 21 | 7 - 69 | 8 - 78 | 2.4 - 23.8 | 2.6 - 26.2 | 8.6 - 86 | 173 | x | | 28 | 28 | | 8, 11 | 15, 16 |
| 2.7 - 23 | 9 - 77 | 3.2 - 27 | 10 - 89 | 12 - 100 | 3.6 - 30.5 | 3.9 - 33.6 | 12.9 - 110 | 139 | x | | 44 | 28 | 3 | | |
| 3.1 - 27 | 10 - 88 | 3.5 - 31 | 12 - 101 | 13 - 114 | 4 - 34.9 | 4.4 - 38.4 | 14.3 - 126 | 250 | x | x | 28 | 28 | | 7, 10 | 14 |
| 3.1 - 32 | 10 - 104 | 3.5 - 36 | 12 - 120 | 13 - 135 | 4 - 41.2 | 4.4 - 45.4 | 14.3 - 149 | 173 | x | | 48 | 28 | | 8, 11 | 15, 16 |
| 3.7 - 37 | 12 - 121 | 4.2 - 42 | 14 - 139 | 16 - 157 | 4.8 - 48 | 5.2 - 52.8 | 17.2 - 173 | 345 | x | | 28 | 28 | | 8, 11 | 15, 16 |
| 5.2 - 42 | 17 - 138 | 6 - 48 | 20 - 159 | 22 - 179 | 6.7 - 54.7 | 7.4 - 60.2 | 24.3 - 197 | 250 | x | | 44 | 28 | | 7, 10 | 14 |
| 6.4 - 54 | 21 - 176 | 7.4 - 62 | 24 - 202 | 27 - 229 | 8.3 - 69.8 | 9.2 - 76.8 | 30 - 252 | 500 | x | x | 28 | 28 | | 7, 10 | 14 |
| 7.9 - 81 | 26 - 264 | 9.1 - 93 | 30 - 304 | | | | | 345 | x | | 48 | 22 | | 8, 11 | 15, 16 |
| 10.1 - 84 | 33 - 276 | 11.6 - 97 | 38 - 317 | | | | | 500 | x | | 44 | 28 | | 7, 10 | 14 |
| CE Gearmotor | | | | | | | | | | | | | | | |
| 0.7 - 1.8 | 2.4 - 6 | 0.8 - 2.1 | 2.8 - 6.9 | 1 - 2.4 | 3.1 - 7.8 | 1 - 2.6 | 3.4 - 8.6 | 39 | x | | 19 | 32 | | 9 | |
| 1.3 - 3.1 | 4.1 - 10 | 1.4 - 3.5 | 4.7 - 11.5 | 1.6 - 4 | 5.3 - 13 | 1.8 - 4.4 | 5.9 - 14.3 | 29 | x | x | 28 | 28 | | 9 | |
| 1.8 - 4.6 | 6 - 15 | 2.1 - 5.3 | 6.9 - 17.3 | 2.4 - 5.9 | 7.8 - 19.5 | 2.6 - 6.5 | 8.6 - 21.5 | 44 | x | x | 28 | 28 | | 9 | |
| 3.7 - 9.5 | 12 - 31 | 4.2 - 10.9 | 14 - 36 | 4.8 - 12 | 16 - 40 | 5 - 14 | 17 - 44 | 88 | x | x | 28 | 28 | | 9 | |
| 7.6 - 18.9 | 25 - 62 | 8.8 - 21.7 | 29 - 71 | 9.9 - 25 | 33 - 81 | 11 - 27 | 36 - 89 | 176 | x | x | 28 | 28 | | 9 | |
| 12 - 30 | 39 - 97 | 14 - 34 | 45 - 112 | 15.5 - 38 | 51 - 126 | 17 - 42 | 56 - 139 | 176 | x | | 44 | 28 | | 9 | |
| 15 - 38 | 49 - 124 | 17 - 43 | 56 - 143 | 19.4 - 49 | 64 - 161 | 21 - 54 | 70 - 177 | 353 | x | x | 28 | 28 | | 9 | |
| 23 - 59 | 77 - 195 | 27 - 68 | 89 - 224 | 30.5 - 77 | 100 - 254 | 34 - 85 | 110 - 279 | 353 | x | | 44 | 28 | | 9 | |
| 33 - 82 | 107 - 270 | 38 - 95 | 123 - 311 | | | | | 353 | x | | 48 | 22 | | 9 | |

**Note:** Nose Bar transfers operate at maximum 23.5 m/min (77 ft/min) belt speed
Red = Parallel Shaft, Blue = 90˚
Other speeds available. See www.dorner.com and run the DTools program for a full list of belt speeds.

Refer to the Gearmotor Selection Steps on page 55 for instructions on using Belt Speed Charts

## 2700 End Drive Belt Speed

**Variable Speed**

| 2700 Belt | | RPM From Gearmotor | Mount Package | | Pulley Kit | | Gearmotor Chart | |
|---|---|---|---|---|---|---|---|---|
| m/min | Ft/min | | Top & Bottom | Side | Drive Pulley | Driven Pulley | Standard Load | Heavy Load |
| 0.2 - 1.9 | 0.6 - 6.2 | 10 | x | x | 28 | 28 | 11 | |
| 0.2 - 2.1 | 0.7 - 6.9 | 10 | x | | 32 | 28 | 11 | |
| 0.3 - 2.8 | 0.9 - 9.2 | 10 | x | | 48 | 32 | 11 | |
| 0.3 - 3.2 | 1 - 11 | 10 | x | | 48 | 28 | 11 | |
| 0.6 - 5.5 | 2 - 18 | 29 | x | x | 28 | 28 | 8, 11, 28 | 15, 29 |
| 0.6 - 6.2 | 2 - 20 | 29 | x | | 32 | 28 | 8, 11, 28 | 15, 29 |
| 0.8 - 8.1 | 3 - 27 | 43 | x | x | 28 | 28 | 8, 28 | 15, 29 |
| 0.8 - 8.2 | 3 - 27 | 29 | x | | 48 | 32 | 8, 11, 28 | 15, 29 |
| 0.9 - 8.7 | 3 - 29 | 46 | x | x | 28 | 28 | 20 | |
| 0.9 - 9.3 | 3 - 31 | 43 | x | | 32 | 28 | 8, 28 | 15, 29 |
| 0.9 - 9.4 | 3 - 31 | 29 | x | | 48 | 28 | 8, 11, 28 | 15, 29 |
| 1 - 9.9 | 3 - 33 | 46 | x | | 32 | 28 | 20 | |
| 1 - 11 | 4 - 36 | 58 | x | x | 28 | 28 | 11 | |
| 1 - 11 | 4 - 37 | 60 | x | x | 28 | 28 | 26 | |
| 1 - 12 | 4 - 40 | 43 | x | | 48 | 32 | 8, 28 | 15, 29 |
| 1 - 13 | 4 - 41 | 58 | x | | 32 | 28 | 11 | |
| 1 - 13 | 4 - 42 | 60 | x | | 32 | 28 | 26 | |
| 1 - 13 | 4 - 43 | 46 | x | | 48 | 32 | 20 | |
| 1 - 14 | 5 - 46 | 43 | x | | 48 | 28 | 8, 28 | 15, 29 |
| 2 - 15 | 5 - 49 | 46 | x | | 48 | 28 | 20 | |
| 2 - 16 | 5 - 53 | 86 | x | x | 28 | 28 | 8, 11, 28 | 15, 29 |
| 2 - 16 | 5 - 54 | 58 | x | | 48 | 32 | 11 | |
| 2 - 17 | 6 - 56 | 60 | x | | 48 | 32 | 26 | |
| 2 - 19 | 6 - 61 | 86 | x | | 32 | 28 | 8, 11, 28 | 15, 29 |
| 2 - 19 | 6 - 61 | 58 | x | | 48 | 28 | 11 | |
| 2 - 19 | 6 - 64 | 60 | x | | 48 | 28 | 26 | |
| 2 - 21 | 7 - 67 | 109 | x | x | 28 | 28 | 20 | |
| 2 - 24 | 8 - 77 | 109 | x | | 32 | 28 | 20 | |
| 2 - 24 | 8 - 80 | 86 | x | | 48 | 32 | 8, 11, 28 | 15, 29 |
| 3 - 28 | 9 - 91 | 86 | x | | 48 | 28 | 8, 11, 28 | 15, 29 |
| 3 - 28 | 9 - 93 | 150 | x | x | 28 | 28 | 26 | |
| 3 - 31 | 10 - 101 | 109 | x | | 48 | 32 | 20 | |
| 3 - 32 | 11 - 106 | 150 | x | | 32 | 28 | 26 | |
| 3 - 33 | 11 - 107 | 173 | x | | 32 | 32 | 8, 11, 28 | 15, 29 |
| 4 - 35 | 12 - 116 | 109 | x | | 48 | 28 | 20 | |
| 4 - 37 | 12 - 122 | 173 | x | | 32 | 28 | 8, 11, 28 | 15, 29 |
| 4 - 38 | 12 - 124 | 200 | x | x | 28 | 28 | 26 | |
| 4 - 41 | 14 - 136 | 219 | x | x | 28 | 28 | 20 | |
| 4 - 42 | 14 - 139 | 150 | x | | 48 | 32 | 26 | |
| 4 - 43 | 14 - 141 | 200 | x | | 32 | 28 | 26 | |
| 5 - 47 | 15 - 155 | 219 | x | | 32 | 28 | 20 | |
| 5 - 48 | 16 - 159 | 150 | x | | 48 | 28 | 26 | |
| 5 - 49 | 16 - 160 | 173 | x | | 48 | 32 | 8, 11, 28 | 15, 29 |
| 6 - 56 | 18 - 183 | 173 | x | | 48 | 28 | 8, 11, 28 | 15, 29 |
| 6 - 57 | 19 - 185 | 200 | x | | 48 | 32 | 26 | |
| 6 - 62 | 20 - 203 | 219 | x | | 48 | 32 | 20 | |
| 7 - 65 | 21 - 212 | 200 | x | | 48 | 28 | 26 | |
| 7 - 65 | 21 - 213 | 345 | x | x | 28 | 28 | 8, 11, 28 | 15, 29 |
| 7 - 71 | 23 - 232 | 219 | x | | 48 | 28 | 20 | |
| 7 - 74 | 24 - 244 | 345 | x | | 32 | 28 | 8, 11, 28 | 15, 29 |
| 10 - 98 | 32 - 320 | 345 | x | | 48 | 32 | 8, 11, 28 | 15, 29 |
| 11 - 111 | 37 - 366 | 345 | x | | 48 | 28 | 8, 11, 28 | 15, 29 |
| 13 - 127 | 42 - 415 | 672 | x | x | 28 | 28 | | 15 |
| 14 - 145 | 47 - 475 | 672 | x | | 32 | 28 | | 15 |
| 19 - 190 | 62 - 623 | 672 | x | | 48 | 32 | | 15 |
| 22 - 217 | 71 - 712 | 672 | x | | 48 | 28 | | 15 |

**Variable Speed**

| 2700 Belt | | RPM From Gearmotor | Mount Package | | Pulley Kit | | Gearmotor Chart | |
|---|---|---|---|---|---|---|---|---|
| m/min | Ft/min | | Top & Bottom | Side | Drive Pulley | Driven Pulley | Standard Load | Heavy Load |
| CE Gearmotor RPM at 50Hz. | | | | | | | | |
| 0.6 - 5.5 | 2 - 18 | 29 | x | | 28 | 28 | 9 | |
| 0.6 - 6.2 | 2 - 20 | 29 | x | | 32 | 28 | 9 | |
| 0.8 - 8.2 | 3 - 27 | 29 | x | | 48 | 32 | 9 | |
| 0.8 - 8.3 | 3 - 27 | 44 | x | | 28 | 28 | 9 | |
| 0.9 - 9.4 | 3 - 31 | 29 | x | | 48 | 28 | 9 | |
| 1 - 9.5 | 3 - 31 | 44 | x | | 32 | 28 | 9 | |
| 1 - 12 | 4 - 41 | 44 | x | | 48 | 32 | 9 | |
| 1 - 14 | 5 - 47 | 44 | x | | 48 | 28 | 9 | |
| 2 - 17 | 6 - 55 | 88 | x | | 28 | 28 | 9 | |
| 2 - 19 | 6 - 62 | 88 | x | | 32 | 28 | 9 | |
| 3 - 25 | 8 - 82 | 88 | x | | 48 | 32 | 9 | |
| 3 - 28 | 9 - 93 | 88 | x | | 48 | 28 | 9 | |
| 3 - 33 | 11 - 109 | 176 | x | | 28 | 28 | 9 | |
| 4 - 38 | 12 - 124 | 176 | x | | 32 | 28 | 9 | |
| 5 - 50 | 16 - 163 | 176 | x | | 48 | 32 | 9 | |
| 6 - 57 | 19 - 186 | 176 | x | | 48 | 28 | 9 | |
| 7 - 67 | 22 - 218 | 353 | x | | 28 | 28 | 9 | |
| 8 - 76 | 25 - 249 | 353 | x | | 32 | 28 | 9 | |
| 10 - 100 | 33 - 327 | 353 | x | | 48 | 32 | 9 | |
| 11 - 114 | 37 - 374 | 353 | x | | 48 | 28 | 9 | |

**Note:** Nose Bar transfers operate at maximum 23.5 m/min (77 ft/min) belt speed
Red = Parallel Shaft, Blue = 90˚

Other speeds available. See www.dorner.com and run the DTools program for a full list of belt speeds.

Refer to the Gearmotor Selection Steps on page 55 for instructions on using Belt Speed Charts

**Product Applications/Uses:**

- Wide product transfers
- Product stops/escapements
- Product detection
- Lift stations
- Sheet handling

## Flush Bottom Mount Package, Parallel Shaft Gearmotor

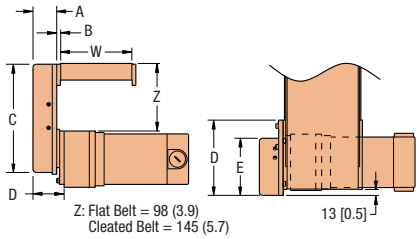


| | | |
|---|---|---|
| **A:** | 2200 = 51 [2.0] | 2700 = 41 [1.65] |
| **B:** | 2200 = 9 [0.3] | 2700 = 17 [0.67] |
| **C:** | 2200 = 232 [9.1] | 2700 = 235[9.25] |
| **D:** | 2200 = 161 [6.3] | 2700 = 189 [7.44] |
| **E:** | 2200 = 122[4.8] | 2700 = 103 [4.06] |

**Standard Load**

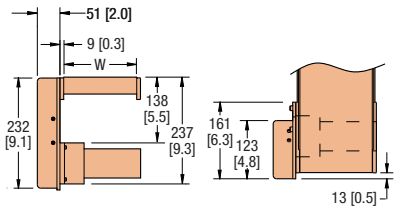


**Light Load** (2200 only)

## Flush Bottom Mount Package, 90º Gearmotor

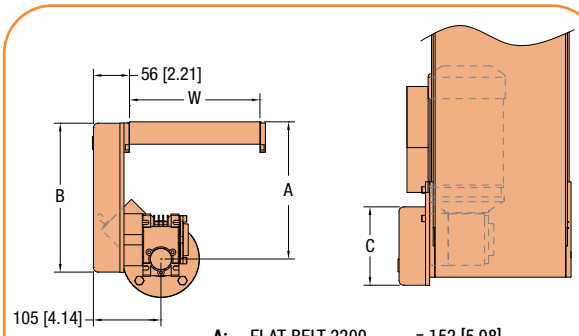


| | | |
|---|---|---|
| **A:** | FLAT BELT 2200 | = 152 [5.98] |
| | FLAT BELT 2700 | = 225 [8.85] |
| | CLEATED BELT 2200 | = 214 [8.41] |
| **B:** | 2200 | = 232 [9.13] |
| | 2700 | = 235 [9.25] |
| **C:** | 2200 | = 103 [4.06] |
| | 2700 | = 122 [4.81] |

**Standard Load**

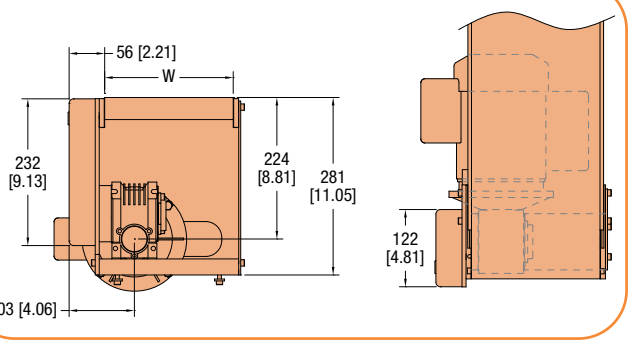


**Heavy Load** (2200 only)

**Dim** = mm (in)

Refer to the Gearmotor Selection Steps on page 55 for instructions on using Belt Speed Charts

## 2200 Flush Bottom Belt Speed

### Fixed Speed

| 2200 Belt | | 2200 Precision Move | | 2200 Modular Belt | | | | RPM From Gearmotor | Pulley Kit | | Gearmotor Chart | | |
|---|---|---|---|---|---|---|---|---|---|---|---|---|---|
| | | | | Microptich Belts 01 and 02 | | Metalworking Belts 30 thru 42 | | | | | | | |
| m/min | ft/min | m/min | ft/min | m/min | ft/min | m/min | ft/min | | Drive Pulley | Driven Pulley | Light Load | Standard Load | Heavy Load |
| 1.8 | 5.9 | 2.1 | 6.8 | 2.3 | 7.7 | 2.6 | 8.4 | 10 | 28 | 16 | | 5 | |
| 3.1 | 10.1 | 3.7 | 12 | 4.0 | 13.1 | 4.4 | 14.4 | 10 | 48 | 16 | | 5 | |
| 5.5 | 18 | 6.4 | 21 | 7.1 | 23 | 7.9 | 26 | 29 | 28 | 16 | | 4, 5 | 12, 13 |
| 8.5 | 28 | 9.8 | 32 | 11.1 | 36 | 12.2 | 40 | 29 | 44 | 16 | | 4, 5 | 12, 13 |
| 7.6 | 25 | 8.8 | 29 | 9.9 | 33 | 10.9 | 36 | 42 | 28 | 16 | 1 | | |
| 12.2 | 40 | 14 | 46 | 16 | 52 | 17.4 | 57 | 42 | 44 | 16 | 1 | | |
| 12.5 | 41 | 14.3 | 47 | 16.3 | 53 | 17.9 | 59 | 43 | 44 | 16 | | 4, 19 | 12, 13 |
| 16.8 | 55 | 19.2 | 63 | 21.8 | 72 | 24.0 | 79 | 58 | 44 | 16 | | 5 | |
| 25.3 | 83 | 29.0 | 95 | 32.9 | 108 | 36.2 | 119 | 86 | 44 | 16 | | 4, 5 | 12, 13 |
| 32.3 | 106 | 37.2 | 122 | 42.0 | 138 | 46.2 | 152 | 173 | 28 | 16 | 1 | 4, 5 | 12, 13 |
| 50.9 | 167 | 58.6 | 192 | 66.2 | 217 | 72.8 | 239 | 173 | 44 | 16 | | 4, 5 | 12, 13 |
| 64.7 | 212 | 74.4 | 244 | | | | | 345 | 28 | 16 | 1 | 4, 5 | 12, 13 |
| CE Gearmotor RPM at 50 Hz. | | | | | | | | | | | | | |
| 4.3 | 14 | 4.9 | 16 | 5.6 | 18 | 5.6 | 18 | 23 | 28 | 16 | | 6 | |
| 7.0 | 23 | 8.1 | 26 | 9.1 | 30 | 9.1 | 30 | 23 | 44 | 16 | | 6 | |
| 10.4 | 34 | 11.9 | 39 | 13.5 | 44 | 13.5 | 44 | 35 | 44 | 16 | | 6 | |
| 7.6 | 25 | 8.8 | 29 | 9.9 | 33 | 9.9 | 33 | 41 | 28 | 16 | 2 | | |
| 11.9 | 39 | 13.7 | 45 | 15.5 | 51 | 15.5 | 51 | 41 | 44 | 16 | 2 | | |
| 13.1 | 43 | 15.1 | 49 | 17.0 | 56 | 17.0 | 56 | 70 | 28 | 16 | | 6 | |
| 20.4 | 67 | 23.5 | 77 | 26.6 | 87 | 26.6 | 87 | 70 | 44 | 16 | | 6 | |
| 26.2 | 86 | 30.2 | 99 | 34.1 | 112 | 34.1 | 112 | 140 | 28 | 16 | | 6 | |
| 41.2 | 135 | 47.4 | 155 | 53.5 | 176 | 53.5 | 176 | 140 | 44 | 16 | | 6 | |
| 52.5 | 172 | 60.3 | 198 | 68.2 | 224 | 68.2 | 224 | 280 | 28 | 16 | | 6 | |
| 82.4 | 270 | 94.7 | 311 | | | | | 280 | 44 | 16 | | 6 | |

### Variable Speed

| 2200 Belt | | 2200 Precision Move | | 2200 Modular Belt | | | | RPM From Gearmotor | Pulley Kit | | Gearmotor Chart | | |
|---|---|---|---|---|---|---|---|---|---|---|---|---|---|
| | | | | Microptich Belts 01 and 02 | | Metalworking Belts 30 thru 42 | | | | | | | |
| m/min | ft/min | m/min | ft/min | m/min | ft/min | m/min | ft/min | | Drive Pulley | Driven Pulley | Light Load | Standard Load | Heavy Load |
| 0.5 - 4 | 1.6 - 13 | 0.6 - 4.6 | 1.8 - 15 | 1 - 5 | 2 - 17 | 1 - 6 | 2 - 19 | 14 | 44 | 16 | | 10 | |
| 0.9 - 8.5 | 2.8 - 28 | 1 - 9.8 | 3.2 - 32.2 | 1 - 11 | 4 - 36 | 1 - 12 | 4 - 40 | 29 | 44 | 16 | | 8, 11 | 15, 16 |
| 1 - 8 | 3.1 - 26 | 1 - 9 | 4 - 30 | 1 - 10 | 4 - 34 | 1 - 11 | 4 - 37 | 42 | 28 | 16 | 3 | 7, 10 | 14 |
| 1 - 12 | 4.8 - 40 | 2 - 14 | 6 - 46 | 2 - 16 | 6 - 52 | 2 - 17 | 7 - 57 | 42 | 44 | 16 | 3 | 7, 10 | 14 |
| 1 - 13 | 4.2 - 42 | 1 - 15 | 5 - 48 | 2 - 17 | 5 - 55 | 2 - 18 | 6 - 60 | 43 | 44 | 16 | | 8, 20 | 15, 16 |
| 2 - 18 | 7 - 60 | 2 - 21 | 8 - 69 | 3 - 24 | 9 - 78 | 3 - 26 | 10 - 86 | 63 | 44 | 16 | | 7 | 14 |
| 3 - 25 | 10 - 81 | 4 - 28 | 12 - 93 | 4 - 32 | 13 - 105 | 4 - 35 | 14 - 116 | 83 | 44 | 16 | | 10 | |
| 2 - 25 | 8 - 83 | 3 - 29 | 9 - 95 | 3 - 33 | 10 - 108 | 3 - 36 | 11 - 119 | 86 | 44 | 16 | | 8, 11 | 15, 16 |
| 4 - 37 | 14 - 121 | 5 - 42 | 16 - 139 | 6 - 48 | 18 - 157 | 6 - 53 | 20 - 173 | 125 | 44 | 16 | | 7, 10 | 14 |
| 3 - 26 | 10 - 85 | 4 - 30 | 12 - 98 | 4 - 34 | 13 - 111 | 4 - 37 | 14 - 122 | 139 | 28 | 16 | 3 | | |
| 5 - 54 | 17 - 177 | 6 - 62 | 20 - 204 | 7 - 70 | 22 - 230 | 7 - 77 | 24 - 253 | 173 | 44 | 16 | | 8, 11 | 15, 16 |
| 6 - 65 | 21 - 212 | 7 - 74 | 24 - 244 | | | | | 345 | 28 | 16 | | 8, 11 | 15, 16 |
| 9 - 74 | 29 - 241 | 10 - 85 | 33 - 277 | | | | | 250 | 44 | 16 | | 7, 10 | 14 |
| CE Gearmotor | | | | | | | | | | | | | |
| 2.1 - 5.5 | 7 - 18 | 2.5 - 6.3 | 8.1 - 20.7 | 3 - 7 | 9 - 23 | 3 - 8 | 10 - 26 | 29 | 28 | 16 | | 9 | |
| 3.4 - 8.5 | 11 - 28 | 3.9 - 9.8 | 12.7 - 32.2 | 4 - 11 | 14 - 36 | 5 - 12 | 16 - 40 | 29 | 44 | 16 | | 6 | |
| 5 - 13 | 17 - 43 | 6 - 15 | 20 - 49 | 7 - 17 | 22 - 56 | 7 - 19 | 24 - 61 | 44 | 44 | 16 | | 6 | |
| 10 - 26 | 34 - 85 | 12 - 30 | 39 - 98 | 13 - 34 | 44 - 111 | 15 - 37 | 49 - 122 | 88 | 44 | 16 | | 9 | |
| 13 - 33 | 43 - 108 | 15 - 38 | 49 - 124 | 17 - 43 | 56 - 140 | 19 - 47 | 61 - 154 | 176 | 28 | 16 | | 9 | |
| 21 - 52 | 68 - 170 | 24 - 60 | 78 - 196 | 27 - 67 | 88 - 221 | 30 - 74 | 97 - 243 | 176 | 44 | 16 | | 6 | |
| 26 - 66 | 86 - 216 | 30 - 76 | 99 - 248 | | | | | 353 | 28 | 16 | | 6 | |

Red = Parallel Shaft, Blue = 90˚

Refer to the Gearmotor Selection Steps on page 55 for instructions on using Belt Speed Charts

Other speeds available. See www.dorner.com and run the DTools program for a full list of belt speeds.

## Gang Mid Drive Belt Speed Charts

**Fixed Speed**

| 2200 Precision Move | | RPM From Gearmotor | Gearmotor Chart | |
|---|---|---|---|---|
| m/min | Ft/min | | Standard Load | Heavy Load |
| 4.6 | 15 | 29 | 4 | 12 |
| 7.0 | 23 | 43 | 4 | 12 |
| 13.7 | 45 | 86 | 4 | 12 |
| 27.8 | 91 | 173 | 4 | 12 |
| 55.2 | 181 | 345 | 4 | 12 |
| CE Gearmotor RPM at 50 Hz. | | | | |
| 3.7 | 12 | 23 | 6 | |
| 5.5 | 18 | 35 | 6 | |
| 11.3 | 37 | 70 | 6 | |
| 22.3 | 73 | 140 | 6 | |
| 44.8 | 147 | 280 | 6 | |

**Variable Speed**

| 2200 Precision Move | | RPM From Gearmotor | Gearmotor Chart | |
|---|---|---|---|---|
| m/min | Ft/min | | Standard Load | Heavy Load |
| 0.6 - 4.6 | 2 - 15 | 29 | 8 | 15 |
| 0.9 - 6.7 | 3 - 22 | 42 | 7 | 14 |
| 0.9 - 7 | 3 - 23 | 43 | 8 | 15 |
| 1.2 - 10.1 | 4 - 33 | 63 | 7 | 14 |
| 1.5 - 13.7 | 5 - 45 | 86 | 8 | 15 |
| 2.1 - 20.1 | 7 - 66 | 125 | 7 | 14 |
| 2.7 - 27.8 | 9 - 91 | 173 | 8 | 15 |
| 4 - 40 | 13 - 131 | 250 | 7 | 14 |
| 5.5 - 55.2 | 18 - 181 | 345 | 8 | 15 |
| 7.9 - 79.9 | 26 - 262 | 500 | 7 | 14 |
| CE RPM from CE/50 Hz gearmotors VFD drive at 63 Max. Hz. output | | | | |
| 1.8 - 4.6 | 6 - 15 | 29 | 9 | |
| 2.7 - 7 | 9 - 23 | 44 | 9 | |
| 5.8 - 14.3 | 19 - 47 | 88 | 9 | |
| 11.3 - 28.1 | 37 - 92 | 176 | 9 | |
| 22.6 - 56.4 | 74 - 185 | 353 | 9 | |

Red = Parallel Shaft, Blue = 90˚

## 2200 Series Bottom, Top & Flush Mount End Drive Mounting Package

2 2 M B P S 06 A - 2828

- **Drive / Driven Pulley Combination** (Top and Bottom mounts only)
- **Belt Style:** "-" = Flat Belt or add Cleat Type: **A, B, C, F, G, H, J, V**
- **Gearmotor Mounting Position: A, B, C, D**
- **Conveyor Width Reference**
- **Gearmotor Type: L, A, V, S, B, H, K**
- **Gearmotor Output Shaft: P** = Parallel Shaft **E** = eDrive® 90° **W** = Sew 90°
- **Mount Style: B** = Bottom Mount **T** = Top Mount **F** = Flush Bottom Mount
- **Documentation Language: M** = US, **U** = Europe

## 2200 Series Side Mount End Drive Motor Mounting Package

2 2 M S E S A T

- **T** = High Torque (not available for L or V)
- **Position: A, B, C, D**
- **Gearmotor Type: L, V, S, H, K**
- **Gearmotor Output Shaft:** **P** = Parallel Shaft **E** = eDrive® 90° **W** = Sew 90°
- **Mount Style: S** = Side
- **Documentation Language:** **M** = US, **U** = Europe

## BELT DRIVE SHAFT POSITION

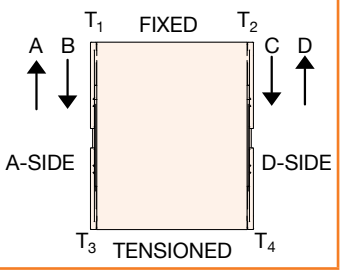


Since belts are being pulled, positions A & D are preferred. Pushing belts (B & C) reduce conveyor load capacity by approximately 66%.

## MODULAR BELT DRIVE SHAFT POSITION

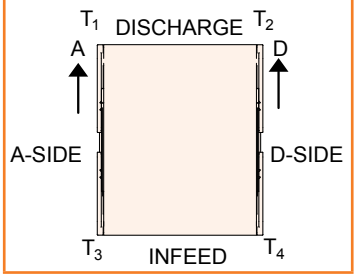


## 2200 Precision Move Gang Drive Side Mounting Package

2 2 M G E S - WW O G G A

- **Position: A or D**
- **End Guard Length:** (00 to 20)
- **Conveyor Quantity: D** = Double **T** = Triple
- **Distance Between Outer Conveyor Edges** (05 to 48)
- **Load Type: S** = Standard **H** = Heavy **K** = Standard VFD
- **Shaft Type: E** = eDrive®
- **Documentation Language: M** = US, **U** = Europe

## 2700 Series Drive Mount Packages

2 L M B P S A - 3 2 3 2

- **Drive / Driven Pulley Combination** pulley options see note
- **Controls/Flow/Drive Shaft Position: A, B, C or D A or D only for MID drive**
- **Gearmotor Type: S** = Standard Load, **H** = Heavy Load
- **Gearmotor Output Shaft: P** = Parallel, **E** = eDrive 90, **W** = Sew 90
- **Mount Style: B** = Bottom Mount, **T** = Top Mount, **S** = Side Mount, **N** = MID drive Side Mount, **M** = MID drive Bottom Mount
- **Documentation Language: M** = US, **U** = Europe
- **Prefix: 2L** = End drive mount packages for 2700 Product

For Universal Drive, see page 56

## Center Drive (2200 Series ONLY)

**TYPE 1 - Vertical Mount**

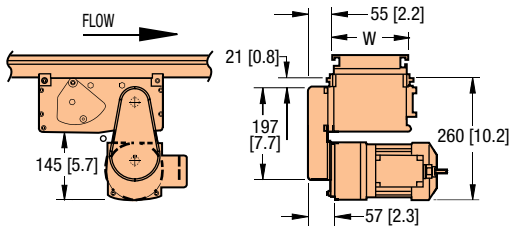


Shown in "D" Position

**Parallel Shaft Gearmotor**

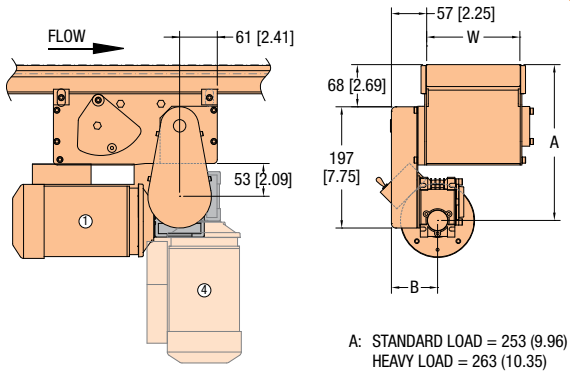


Shown in "D" Position

**90° Gearmotor**

**TYPE 2 - Horizontal Mount**

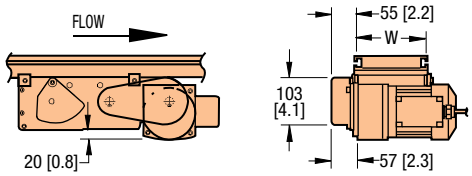


Shown in "D" Position

**Parallel Shaft Gearmotor**

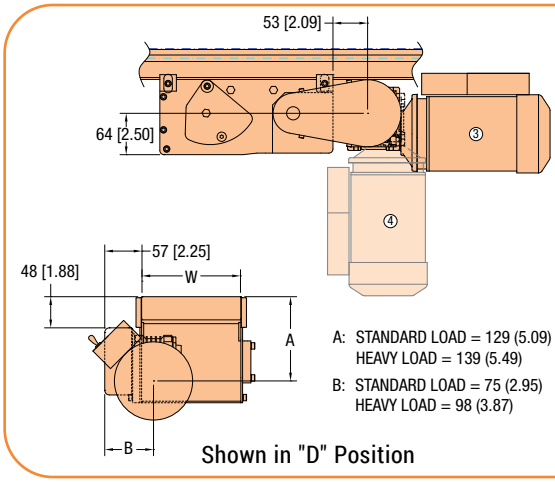


Shown in "D" Position

**90° Gearmotor**

Standard position shown, can be reconfigured to alternative phantom position.

TYPE 2 recommended for tight spaces and allows for easy access to the drive module.

* Gearmotor not included in mounting package, see page 47 for gearmotor ordering information.

## Mid Drive, Bottom Mount

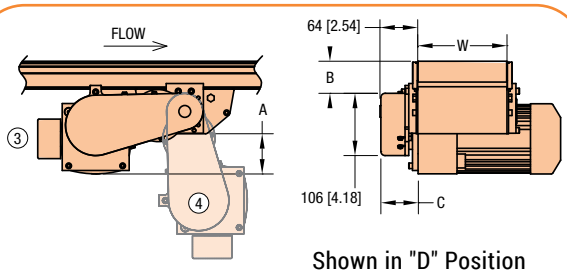


Shown in "D" Position

**A:** 2200 = 69 [2.70] 2700 = 61 [2.42]
**B:** 2200 = 55 [2.16] 2700 = 78 [3.08]
**C:** 2200 = 64 [2.52] 2700 = 59 [2.31]

**Parallel Shaft Gearmotor**

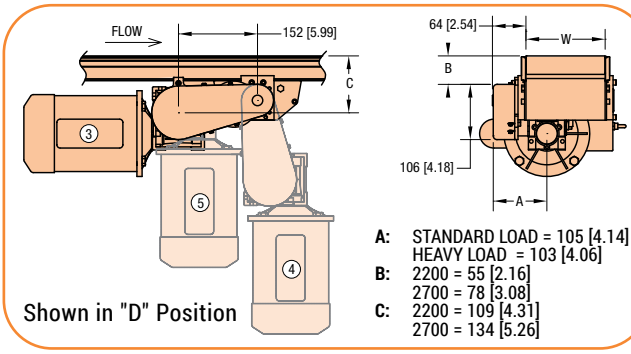


Shown in "D" Position

**A:** STANDARD LOAD = 105 [4.14]
HEAVY LOAD = 103 [4.06]
**B:** 2200 = 55 [2.16]
2700 = 78 [3.08]
**C:** 2200 = 109 [4.31]
2700 = 134 [5.26]

**90° Gearmotor**

Standard position shown, can be reconfigured to alternative phantom position.

**Dim** = mm (in)

For ordering information, see page 72
Refer to the Gearmotor Selection Steps on page 55 for instructions on using Belt Speed Charts

## Mid Drive, Side Mount

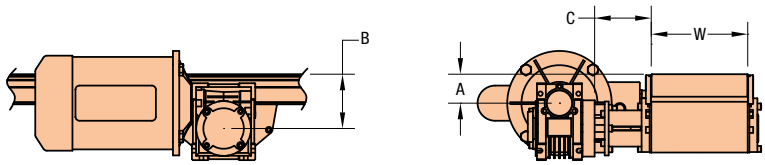


Shown in "D" Position

**A:** STANDARD LOAD 2200 = 56 [2.19]
2700 = 69 [2.72]
HEAVY LOAD = 46 [1.80]
**B:** 2200 = 86 [3.38]
2700 = 109 [4.30]
**C:** 2200 = 89 [3.52]
2700 = 90 [3.55]

**90° Gearmotor**

## 2200 Center & Mid Drive Belt Speed

**Fixed Speed**

| 2200 Belt | | 2200 Precision Move | | 2200 Modular Belt: Micropitch Belts 01 and 02 | | 2200 Modular Belt: Metalworking Belts 30 thru 42 | | RPM From Gearmotor | Side Drive | Pulley Kit | | Gearmotor Chart | |
|---|---|---|---|---|---|---|---|---|---|---|---|---|---|
| m/min | ft/min | m/min | ft/min | m/min | ft/min | m/min | ft/min | | | Drive Pulley | Driven Pulley | Standard Load | Heavy Load |
| 0.6 | 2 | 0.9 | 3.1 | 0.8 | 2.6 | 0.9 | 2.9 | 10 | | 22 | 32 | 5 | |
| 0.9 | 3 | 1.4 | 4.6 | 1.2 | 3.9 | 1.3 | 4.3 | 10 | x | 32 | 32 | 5 | |
| 1.8 | 6 | 2.8 | 9.2 | 2.4 | 7.8 | 2.6 | 8.6 | 29 | | 19 | 32 | 4 | 11, 12 |
| 3.1 | 10 | 4.7 | 15.3 | 4.0 | 13.0 | 4.4 | 14.3 | 29 | x | 32 | 32 | 4, 5 | 11, 12 |
| 4.6 | 15 | 7.0 | 23 | 5.9 | 20 | 6.5 | 21 | 43 | x | 32 | 32 | 4, 19 | 11, 12 |
| 6.1 | 20 | 9.3 | 31 | 7.9 | 26 | 8.7 | 29 | 58 | x | 32 | 32 | 5 | |
| 7.0 | 23 | 10.7 | 35 | 9.1 | 30 | 10.0 | 33 | 43 | | 48 | 32 | 4 | 11, 12 |
| 9.2 | 30 | 14.0 | 46 | 11.9 | 39 | 13.1 | 43 | 86 | x | 32 | 32 | 4, 5 | 11, 12 |
| 18.6 | 61 | 28.5 | 93 | 24.2 | 79 | 26.6 | 87 | 173 | x | 32 | 32 | 4, 5 | 11, 12 |
| 27.8 | 91 | 42.5 | 139 | 36.1 | 118 | 39.7 | 130 | 173 | | 48 | 32 | 4, 5 | 11, 12 |
| 36.9 | 121 | 56.5 | 185 | 48.0 | 157 | 52.8 | 173 | 345 | x | 32 | 32 | 4, 5 | 11, 12 |
| 47.0 | 154 | 71.9 | 236 | 61.1 | 200 | 67.2 | 220 | 345 | | 28 | 22 | 4, 5 | 11, 12 |
| 55.2 | 181 | 84.5 | 277 | 71.8 | 235 | 78.9 | 259 | 345 | | 48 | 28 | 4, 5 | 11, 12 |
| 63.4 | 208 | 97.1 | 318 | | | | | 345 | | 48 | 28 | 4, 5 | 11, 12 |
| 80.5 | 264 | 123.2 | 404 | | | | | 345 | | 48 | 22 | 4, 5 | 11, 12 |
| CE Gearmotor RPM at 50 Hz. | | | | | | | | | | | | | |
| 1.5 | 5 | 2.3 | 7.7 | 2.0 | 6.5 | 2.2 | 7.2 | 23 | | 19 | 32 | 6 | |
| 2.4 | 8 | 3.7 | 12.2 | 3.2 | 10.4 | 3.5 | 11.4 | 23 | x | 32 | 32 | 6 | |
| 3.7 | 12 | 5.6 | 18.4 | 4.8 | 15.6 | 5.2 | 17.2 | 35 | x | 32 | 32 | 6 | |
| 5.5 | 18 | 8.4 | 27.5 | 7.1 | 23 | 7.9 | 26 | 35 | | 48 | 32 | 6 | |
| 7.6 | 25 | 11.7 | 38 | 9.9 | 33 | 10.9 | 36 | 70 | x | 32 | 32 | 6 | |
| 11.3 | 37 | 17.3 | 57 | 14.7 | 48 | 16.1 | 53 | 70 | | 48 | 32 | 6 | |
| 14.9 | 49 | 22.9 | 75 | 19.4 | 64 | 21.4 | 70 | 140 | x | 32 | 32 | 6 | |
| 22.6 | 74 | 34.5 | 113 | 29.3 | 96 | 32.3 | 106 | 140 | | 48 | 32 | 6 | |
| 29.9 | 98 | 45.7 | 150 | 38.9 | 127 | 42.7 | 140 | 280 | x | 32 | 32 | 6 | |
| 45.1 | 148 | 69.1 | 226 | 58.7 | 192 | 64.6 | 212 | 280 | | 48 | 32 | 6 | |
| 51.5 | 169 | 78.9 | 259 | 67.0 | 220 | 73.7 | 242 | 280 | | 48 | 28 | 6 | |
| 65.3 | 214 | 99.9 | 327 | | | | | 280 | | 48 | 22 | 6 | |
| 75.6 | 248 | 115.7 | 379 | | | | | 280 | | 48 | 19 | 6 | |

**Note:** Nose Bar transfers operate at maximum 23.5 m/min (77 ft/min) belt speed
Red = Parallel Shaft, Blue = 90˚

**Dim** = mm (in)

## 2200 Center & Mid Drive Belt Speed

**Variable Speed**

| 2200 Belt | | 2700 Belt | | 2200 Precision Move | | 2200 Modular Belt | | | | RPM From Gearmotor | Side Drive | Pulley Kit | | Gearmotor Chart | |
|---|---|---|---|---|---|---|---|---|---|---|---|---|---|---|---|
| | | | | | | Microptich Belts 01 and 02 | | Metalworking Belts 30 thru 42 | | | | | | | |
| m/min | ft/min | m/min | ft/min | m/min | ft/min | m/min | ft/min | m/min | ft/min | | | Drive Pulley | Driven Pulley | Standard Load | Heavy Load |
| 0.1 - 1 | 0.4 - 3.4 | 0.1 - 1 | 0.4 - 3.4 | 0.2 - 1.6 | 0.6 - 5.2 | 0.2 - 1.3 | 0.5 - 4.4 | 0.2 - 1.5 | 0.6 - 4.9 | 14 | | 22 | 32 | 10 | |
| 0.2 - 1.5 | 0.6 - 4.9 | 0.2 - 1.5 | 0.6 - 4.9 | 0.3 - 2.3 | 0.9 - 7.5 | 0.2 - 1.9 | 0.8 - 6.4 | 0.3 - 2.1 | 0.9 - 7 | 14 | x | 32 | 32 | 10 | |
| 0.2 - 1.8 | 0.7 - 6 | 0.2 - 1.8 | 0.7 - 6 | 0.3 - 2.8 | 1.1 - 9.2 | 0.3 - 2.4 | 0.9 - 7.8 | 0.3 - 2.6 | 1 - 8.6 | 29 | | 19 | 32 | 8 | 15, 16 |
| 0.3 - 2.7 | 1 - 9 | 0.3 - 2.7 | 1 - 9 | 0.5 - 4.2 | 1.5 - 13.8 | 0.4 - 3.6 | 1.3 - 11.7 | 0.4 - 3.9 | 1.4 - 12.9 | 42 | | 19 | 32 | 7, 10 | 14 |
| 0.4 - 3.1 | 1.2 - 10 | 0.4 - 3.1 | 1.2 - 10 | 0.6 - 4.7 | 1.8 - 15.3 | 0.5 - 4 | 1.6 - 13 | 0.5 - 4.4 | 1.7 - 14.3 | 29 | x | 32 | 32 | 8, 11 | 15, 16 |
| 0.5 - 4.6 | 1.8 - 15 | 0.5 - 4.6 | 1.8 - 15 | 0.8 - 7 | 2.8 - 23 | 1 - 6 | 2 - 20 | 1 - 7 | 3 - 21 | 42 | x | 32 | 32 | 7, 10 | 14 |
| 0.5 - 4.6 | 1.8 - 15 | 0.5 - 4.6 | 1.8 - 15 | 0.8 - 7 | 2.8 - 23 | 1 - 6 | 2 - 20 | 1 - 7 | 3 - 21 | 43 | x | 32 | 32 | 8, 20 | 15, 16 |
| 0.8 - 6.7 | 2.6 - 22 | 0.8 - 6.7 | 2.6 - 22 | 1.2 - 10.3 | 4 - 33.7 | 1 - 9 | 3 - 29 | 1 - 10 | 4 - 31 | 63 | x | 32 | 32 | 7 | 14 |
| 1.1 - 9 | 3.5 - 29 | 1.1 - 9 | 3.5 - 29 | 2 - 14 | 5 - 44 | 1 - 11 | 5 - 38 | 2 - 13 | 5 - 41 | 83 | x | 32 | 32 | 10 | |
| 1.1 - 9 | 3.6 - 30 | 1.1 - 9 | 3.6 - 30 | 2 - 14 | 6 - 46 | 1 - 12 | 5 - 39 | 2 - 13 | 5 - 43 | 86 | x | 32 | 32 | 8, 11 | 15, 16 |
| 1.6 - 13 | 5.3 - 44 | 1.6 - 13 | 5.3 - 44 | 2 - 21 | 8 - 67 | 2 - 17 | 7 - 57 | 2 - 19 | 8 - 63 | 125 | x | 32 | 32 | 7, 10 | 14 |
| 2.1 - 19 | 7 - 61 | 2.1 - 19 | 7 - 61 | 3 - 28 | 11 - 93 | 3 - 24 | 9 - 79 | 3 - 27 | 10 - 87 | 173 | x | 32 | 32 | 8, 11 | 15, 16 |
| 3.1 - 27 | 10 - 88 | 3.1 - 27 | 10 - 88 | 5 - 41 | 15 - 135 | 4 - 35 | 13 - 114 | 4 - 38 | 14 - 126 | 250 | x | 32 | 32 | 7, 10 | 14 |
| 3.7 - 32 | 12 - 104 | 3.7 - 32 | 12 - 104 | 6 - 49 | 18 - 159 | 5 - 41 | 16 - 135 | 5 - 45 | 17 - 149 | 173 | | 48 | 28 | 8, 11 | 15, 16 |
| 4.3 - 37 | 14 - 121 | 4.3 - 37 | 14 - 121 | 7 - 56 | 21 - 185 | 6 - 48 | 18 - 157 | 6 - 53 | 20 - 173 | 345 | x | 32 | 32 | 8, 11 | 15, 16 |
| 5.5 - 46 | 18 - 150 | 5.5 - 46 | 18 - 150 | 8 - 70 | 28 - 230 | 7 - 59 | 23 - 195 | 8 - 65 | 26 - 215 | 250 | | 48 | 28 | 7, 10 | 14 |
| 6.4 - 54 | 21 - 176 | 6.4 - 54 | 21 - 176 | 10 - 82 | 32 - 269 | 8 - 70 | 27 - 229 | 9 - 77 | 30 - 252 | 500 | x | 32 | 32 | 7, 10 | 14 |
| 7 - 58 | 23 - 190 | 7 - 58 | 23 - 190 | 11 - 89 | 35 - 291 | 9 - 75 | 30 - 247 | | | 345 | | 44 | 28 | 8, 11 | 15, 16 |
| 8.2 - 68 | 27 - 224 | 8.2 - 68 | 27 - 224 | 13 - 105 | 41 - 343 | | | | | 500 | | 28 | 22 | 7, 10 | 14 |
| 8.8 - 74 | 29 - 242 | 8.8 - 74 | 29 - 242 | 14 - 113 | 44 - 370 | | | | | 345 | | 44 | 22 | 8, 11 | 15, 16 |
| 9.5 - 78 | 31 - 255 | 9.5 - 78 | 31 - 255 | 14 - 119 | 47 - 390 | | | | | 500 | | 32 | 22 | 7, 10 | 14 |
| CE gearmotors, VFD drive at 63 max. Hz. output. | | | | | | | | | | | | | | | |
| 0.7 - 1.8 | 2.4 - 6 | 0.7 - 1.8 | 2.4 - 6 | 1.1 - 2.8 | 3.7 - 9.2 | 1 - 2.4 | 3.1 - 7.8 | 1 - 2.6 | 3.4 - 8.6 | 29 | | 19 | 32 | 9 | |
| 1.3 - 3.1 | 4.1 - 10 | 1.3 - 3.1 | 4.1 - 10 | 1.9 - 4.7 | 6.3 - 15.3 | 1.6 - 4 | 5.3 - 13 | 1.8 - 4.4 | 5.9 - 14.3 | 29 | x | 32 | 32 | 9 | |
| 1.8 - 4.9 | 6 - 16 | 1.8 - 4.9 | 6 - 16 | 2.8 - 7.5 | 9.2 - 24.5 | 2.4 - 6.3 | 8 - 21 | 2.6 - 7 | 8.6 - 22.9 | 44 | x | 32 | 32 | 9 | |
| 3.7 - 9 | 12 - 31 | 3.7 - 9 | 12 - 31 | 6 - 14 | 18 - 47 | 5 - 12 | 16 - 40 | 5 - 14 | 17 - 44 | 88 | x | 32 | 32 | 9 | |
| 7.3 - 19 | 24 - 62 | 7.3 - 19 | 24 - 62 | 11 - 29 | 37 - 95 | 10 - 25 | 31 - 81 | 10 - 27 | 34 - 89 | 176 | x | 32 | 32 | 9 | |
| 11.3 - 28 | 37 - 93 | 11.3 - 28 | 37 - 93 | 17 - 43 | 57 - 142 | 15 - 37 | 48 - 121 | 16 - 41 | 53 - 133 | 176 | | 48 | 32 | 9 | |
| 14.9 - 38 | 49 - 124 | 14.9 - 38 | 49 - 124 | 23 - 58 | 75 - 190 | 19 - 49 | 64 - 161 | 21 - 54 | 70 - 177 | 353 | x | 32 | 32 | 9 | |
| 22.6 - 57 | 74 - 186 | 22.6 - 57 | 74 - 186 | 35 - 87 | 113 - 285 | 29 - 74 | 96 - 242 | 32 - 81 | 106 - 266 | 355 | | 48 | 32 | 9 | |
| 29.9 - 76 | 98 - 248 | 29.9 - 76 | 98 - 248 | 46 - 116 | 150 - 379 | | | | | 353 | | 44 | 22 | 9 | |

**Note:** Nose Bar transfers operate at maximum 23.5 m/min (77 ft/min) belt speed
Red = Parallel Shaft, Blue = 90˚

Refer to the Gearmotor Selection Steps on page 55 for instructions on using Belt Speed Charts

## 2700 Mid Drive Belt Speed

| Fixed Speed | | | | | | | | |
|---|---|---|---|---|---|---|---|---|
| 2700 Belt | | RPM From Gearmotor | Mount Package | | Pulley Kit | | Gearmotor Chart | |
| m/min | ft/min | | Top & Bottom | Side | Drive Pulley | Driven Pulley | Standard Load | Heavy Load |
| 1.9 | 6.2 | 10 | x | x | 28 | 28 | 5 | |
| 2.1 | 6.9 | 10 | x | | 32 | 28 | 5 | |
| 2.8 | 9.2 | 10 | x | | 48 | 32 | 5 | |
| 3.2 | 11 | 10 | x | | 48 | 28 | 5 | |
| 5.5 | 18 | 29 | x | x | 28 | 28 | 4, 5 | 12 |
| 6.2 | 20 | 29 | x | | 32 | 28 | 4, 5 | 12 |
| 8.1 | 27 | 43 | x | x | 28 | 28 | 4 | 12 |
| 8.2 | 27 | 29 | x | | 48 | 32 | 4, 5 | 12 |
| 8.7 | 29 | 46 | x | x | 28 | 28 | 19 | |
| 9.3 | 31 | 43 | x | | 32 | 28 | 4 | 12 |
| 9.4 | 31 | 29 | x | | 48 | 28 | 4, 5 | 12 |
| 9.9 | 33 | 46 | x | | 32 | 28 | 19 | |
| 11 | 36 | 58 | x | x | 28 | 28 | 5 | |
| 12 | 40 | 43 | x | | 48 | 32 | 4, 5 | 12 |
| 13 | 41 | 58 | x | | 32 | 28 | 5 | |
| 13 | 43 | 46 | x | | 48 | 32 | 19 | |
| 14 | 46 | 43 | x | | 48 | 28 | 4 | 12 |
| 15 | 49 | 46 | x | | 48 | 28 | 19 | |
| 16 | 53 | 86 | x | x | 28 | 28 | 4, 5 | 12 |
| 16 | 54 | 58 | x | | 48 | 32 | 5 | |
| 19 | 61 | 86 | x | | 32 | 28 | 4, 5 | 12 |
| 19 | 61 | 58 | x | | 48 | 28 | 5 | |
| 21 | 67 | 109 | x | x | 28 | 28 | 19 | |
| 24 | 77 | 109 | x | | 32 | 28 | 19 | |
| 24 | 80 | 86 | x | | 48 | 32 | 4, 5 | 12 |
| 28 | 91 | 86 | x | | 48 | 28 | 4, 5 | 12 |
| 31 | 101 | 109 | x | | 48 | 32 | 19 | |
| 33 | 107 | 173 | x | x | 28 | 28 | 4, 5 | 12 |
| 35 | 116 | 109 | x | | 48 | 28 | 19 | |
| 37 | 122 | 173 | x | | 32 | 28 | 4, 5 | 12 |
| 41 | 136 | 219 | x | x | 28 | 28 | 19 | |
| 47 | 155 | 219 | x | | 32 | 28 | 19 | |
| 49 | 160 | 173 | x | | 48 | 32 | 4, 5 | 12 |
| 56 | 183 | 173 | x | | 48 | 28 | 4, 5 | 12 |
| 62 | 203 | 219 | x | | 48 | 32 | 19 | |
| 65 | 213 | 345 | x | x | 28 | 28 | 4, 5 | 12 |
| 71 | 232 | 219 | x | | 48 | 28 | 19 | |
| 74 | 244 | 345 | x | | 32 | 28 | 4, 5 | 12 |
| 98 | 320 | 345 | x | | 48 | 32 | 4, 5 | 12 |
| 111 | 366 | 345 | x | | 48 | 28 | 4, 5 | 12 |
| 127 | 415 | 672 | x | x | 28 | 28 | | 12 |
| 145 | 475 | 672 | x | | 32 | 28 | | 12 |
| 190 | 623 | 672 | x | | 48 | 32 | | 12 |
| 217 | 712 | 672 | x | | 48 | 28 | | 12 |
| CE Gearmotor RPM at 50 Hz. | | | | | | | | |
| 2.5 | 8.2 | 23 | x | | 48 | 28 | 6 | |
| 2.9 | 9.5 | 23 | x | | 48 | 32 | 6 | |
| 3.8 | 13 | 35 | x | | 48 | 28 | 6 | |
| 3.8 | 13 | 23 | x | | 32 | 28 | 6 | |
| 4.3 | 14 | 23 | x | x | 28 | 28 | 6 | |
| 4.4 | 14 | 35 | x | | 48 | 32 | 6 | |
| 5.8 | 19 | 35 | x | | 32 | 28 | 6 | |
| 6.6 | 22 | 35 | x | x | 28 | 28 | 6 | |
| 7.7 | 25 | 70 | x | | 48 | 28 | 6 | |
| 8.8 | 29 | 70 | x | | 48 | 32 | 6 | |
| 12 | 38 | 70 | x | | 32 | 28 | 6 | |
| 13 | 43 | 70 | x | x | 28 | 28 | 6 | |
| 15 | 51 | 140 | x | | 48 | 28 | 6 | |
| 18 | 58 | 140 | x | | 48 | 32 | 6 | |
| 23 | 76 | 140 | x | | 32 | 28 | 6 | |
| 26 | 87 | 140 | x | x | 28 | 28 | 6 | |
| 31 | 101 | 280 | x | | 48 | 28 | 6 | |
| 35 | 116 | 280 | x | | 48 | 32 | 6 | |
| 46 | 152 | 280 | x | | 32 | 28 | 6 | |
| 53 | 173 | 280 | x | x | 28 | 28 | 6 | |

Cleated Belts operate at maximum 280 ft/min (86 m/min)
Red = Parallel Shaft, Blue = 90˚

Other speeds available. See www.dorner.com and run the DTools program for a full list of belt speeds.

Refer to the Gearmotor Selection Steps on page 55 for instructions on using Belt Speed Charts

## 2700 Mid Drive Belt Speed

**Variable Speed**

| 2700 Belt | | RPM From Gearmotor | Mount Package | | Pulley Kit | | Gearmotor Chart | |
|---|---|---|---|---|---|---|---|---|
| m/min | Ft/min | | Top & Bottom | Side | Drive Pulley | Driven Pulley | Standard Load | Heavy Load |
| 0.2 - 1.9 | 0.6 - 6.2 | 10 | x | x | 28 | 28 | 11 | |
| 0.2 - 2.1 | 0.7 - 6.9 | 10 | x | | 32 | 28 | 11 | |
| 0.3 - 2.8 | 0.9 - 9.2 | 10 | x | | 48 | 32 | 11 | |
| 0.3 - 3.2 | 1 - 11 | 10 | x | | 48 | 28 | 11 | |
| 0.6 - 5.5 | 2 - 18 | 29 | x | x | 28 | 28 | 8, 11, 28 | 15, 29 |
| 0.6 - 6.2 | 2 - 20 | 29 | x | | 32 | 28 | 8, 11, 28 | 15, 29 |
| 0.8 - 8.1 | 3 - 27 | 43 | x | x | 28 | 28 | 8, 28 | 15, 29 |
| 0.8 - 8.2 | 3 - 27 | 29 | x | | 48 | 32 | 8, 11, 28 | 15, 29 |
| 0.9 - 8.7 | 3 - 29 | 46 | x | x | 28 | 28 | 20 | |
| 0.9 - 9.3 | 3 - 31 | 43 | x | | 32 | 28 | 8, 28 | 15, 29 |
| 0.9 - 9.4 | 3 - 31 | 29 | x | | 48 | 28 | 8, 11, 28 | 15, 29 |
| 1 - 9.9 | 3 - 33 | 46 | x | | 32 | 28 | 20 | |
| 1 - 11 | 4 - 36 | 58 | x | x | 28 | 28 | 11 | |
| 1 - 11 | 4 - 37 | 60 | x | x | 28 | 28 | 26 | |
| 1 - 12 | 4 - 40 | 43 | x | | 48 | 32 | 8, 28 | 15, 29 |
| 1 - 13 | 4 - 41 | 58 | x | | 32 | 28 | 11 | |
| 1 - 13 | 4 - 42 | 60 | x | | 32 | 28 | 26 | |
| 1 - 13 | 4 - 43 | 46 | x | | 48 | 32 | 20 | |
| 1 - 14 | 5 - 46 | 43 | x | | 48 | 28 | 8, 28 | 15, 29 |
| 2 - 15 | 5 - 49 | 46 | x | | 48 | 28 | 20 | |
| 2 - 16 | 5 - 53 | 86 | x | x | 28 | 28 | 8, 11, 28 | 15, 29 |
| 2 - 16 | 5 - 54 | 58 | x | | 48 | 32 | 11 | |
| 2 - 17 | 6 - 56 | 60 | x | | 48 | 32 | 26 | |
| 2 - 19 | 6 - 61 | 86 | x | | 32 | 28 | 8, 11, 28 | 15, 29 |
| 2 - 19 | 6 - 61 | 58 | x | | 48 | 28 | 11 | |
| 2 - 19 | 6 - 64 | 60 | x | | 48 | 28 | 26 | |
| 2 - 21 | 7 - 67 | 109 | x | x | 28 | 28 | 20 | |
| 2 - 24 | 8 - 77 | 109 | x | | 32 | 28 | 20 | |
| 2 - 24 | 8 - 80 | 86 | x | | 48 | 32 | 8, 11, 28 | 15, 29 |
| 3 - 28 | 9 - 91 | 86 | x | | 48 | 28 | 8, 11, 28 | 15, 29 |
| 3 - 28 | 9 - 93 | 150 | x | x | 28 | 28 | 26 | |
| 3 - 31 | 10 - 101 | 109 | x | | 48 | 32 | 20 | |
| 3 - 32 | 11 - 106 | 150 | x | | 32 | 28 | 26 | |
| 3 - 33 | 11 - 107 | 173 | x | | 32 | 32 | 8, 11, 28 | 15, 29 |
| 4 - 35 | 12 - 116 | 109 | x | | 48 | 28 | 20 | |
| 4 - 37 | 12 - 122 | 173 | x | | 32 | 28 | 8, 11, 28 | 15, 29 |
| 4 - 38 | 12 - 124 | 200 | x | x | 28 | 28 | 26 | |
| 4 - 41 | 14 - 136 | 219 | x | x | 28 | 28 | 20 | |
| 4 - 42 | 14 - 139 | 150 | x | | 48 | 32 | 26 | |
| 4 - 43 | 14 - 141 | 200 | x | | 32 | 28 | 26 | |
| 5 - 47 | 15 - 155 | 219 | x | | 32 | 28 | 20 | |
| 5 - 48 | 16 - 159 | 150 | x | | 48 | 28 | 26 | |
| 5 - 49 | 16 - 160 | 173 | x | | 48 | 32 | 8, 11, 28 | 15, 29 |
| 6 - 56 | 18 - 183 | 173 | x | | 48 | 28 | 8, 11, 28 | 15, 29 |
| 6 - 57 | 19 - 185 | 200 | x | | 48 | 32 | 26 | |
| 6 - 62 | 20 - 203 | 219 | x | | 48 | 32 | 20 | |
| 7 - 65 | 21 - 212 | 200 | x | | 48 | 28 | 26 | |
| 7 - 65 | 21 - 213 | 345 | x | x | 28 | 28 | 8, 11, 28 | 15, 29 |
| 7 - 71 | 23 - 232 | 219 | x | | 48 | 28 | 20 | |
| 7 - 74 | 24 - 244 | 345 | x | | 32 | 28 | 8, 11, 28 | 15, 29 |
| 10 - 98 | 32 - 320 | 345 | x | | 48 | 32 | 8, 11, 28 | 15, 29 |
| 11 - 111 | 37 - 366 | 345 | x | | 48 | 28 | 8, 11, 28 | 15, 29 |
| 13 - 127 | 42 - 415 | 672 | x | x | 28 | 28 | | 15 |
| 14 - 145 | 47 - 475 | 672 | x | | 32 | 28 | | 15 |
| 19 - 190 | 62 - 623 | 672 | x | | 48 | 32 | | 15 |
| 22 - 217 | 71 - 712 | 672 | x | | 48 | 28 | | 15 |

**Variable Speed**

| 2700 Belt | | RPM From Gearmotor | Mount Package | | Pulley Kit | | Gearmotor Chart | |
|---|---|---|---|---|---|---|---|---|
| m/min | Ft/min | | Top & Bottom | Side | Drive Pulley | Driven Pulley | Standard Load | Heavy Load |
| CE Gearmotor RPM at 50Hz. | | | | | | | | |
| 0.6 - 5.5 | 2 - 18 | 29 | x | | 28 | 28 | 9 | |
| 0.6 - 6.2 | 2 - 20 | 29 | x | | 32 | 28 | 9 | |
| 0.8 - 8.2 | 3 - 27 | 29 | x | | 48 | 32 | 9 | |
| 0.8 - 8.3 | 3 - 27 | 44 | x | | 28 | 28 | 9 | |
| 0.9 - 9.4 | 3 - 31 | 29 | x | | 48 | 28 | 9 | |
| 1 - 9.5 | 3 - 31 | 44 | x | | 32 | 28 | 9 | |
| 1 - 12 | 4 - 41 | 44 | x | | 48 | 32 | 9 | |
| 1 - 14 | 5 - 47 | 44 | x | | 48 | 28 | 9 | |
| 2 - 17 | 6 - 55 | 88 | x | | 28 | 28 | 9 | |
| 2 - 19 | 6 - 62 | 88 | x | | 32 | 28 | 9 | |
| 3 - 25 | 8 - 82 | 88 | x | | 48 | 32 | 9 | |
| 3 - 28 | 9 - 93 | 88 | x | | 48 | 28 | 9 | |
| 3 - 33 | 11 - 109 | 176 | x | | 28 | 28 | 9 | |
| 4 - 38 | 12 - 124 | 176 | x | | 32 | 28 | 9 | |
| 5 - 50 | 16 - 163 | 176 | x | | 48 | 32 | 9 | |
| 6 - 57 | 19 - 186 | 176 | x | | 48 | 28 | 9 | |
| 7 - 67 | 22 - 218 | 353 | x | | 28 | 28 | 9 | |
| 8 - 76 | 25 - 249 | 353 | x | | 32 | 28 | 9 | |
| 10 - 100 | 33 - 327 | 353 | x | | 48 | 32 | 9 | |
| 11 - 114 | 37 - 374 | 353 | x | | 48 | 28 | 9 | |

**Note:** Nose Bar transfers operate at maximum 23.5 m/min (77 ft/min) belt speed
Red = Parallel Shaft, Blue = 90˚

Other speeds available. See www.dorner.com and run the DTools program for a full list of belt speeds.

Refer to the Gearmotor Selection Steps on page 55 for instructions on using Belt Speed Charts

## 2200 Series Belted & Modular Belt Center Drive Mounting Package

2 2 M 2 P S 06 A - 3232

- **Drive / Driven Pulley Combination** (Type 1 & 2 only)
- **"-"** = Belted, **C** = Modular Belt
- **Gearmotor Mounting Position: A** or **D**
- **Conveyor Width Reference**
- **Gearmotor Type: S, H** or **W**
- **Gearmotor Output Shaft: P** = Parallel Shaft or **E** = eDrive®
- **Mount Style: 1** = Type 1, Vertical Mount **2** = Type 2, Horizontal Mount **S** = Side
- **Documentation Language: M** = US, **U** = Europe

## 2200 Belted and Precision Move Mid Drive Mounting Package

2 2 M 6 P E S A - 2828

- **Pulley Kit** (Drive/Driven) (Bottom only)
- **Position: A or D**
- **Load Type: S** = Standard **H** = Heavy **K** = Standard VFD
- **Shaft Type: E** = eDrive® **P** = Parallel **W** = SEW
- **Position: B** = Bottom **S** = Side
- **Documentation Language: M** = US, **U** = Europe

## 2700 Series Drive Mount Packages

2 L M B P S A - 3 2 3 2

- **Drive / Driven Pulley Combination** pulley options see note
- **Controls/Flow/Drive Shaft Position: A, B, C or D A or D only for MID drive**
- **Gearmotor Type: S** = Standard Load, **H** = Heavy Load
- **Gearmotor Output Shaft: P** = Parallel, **E** = eDrive 90, **W** = Sew 90
- **Mount Style: B** = Bottom Mount, **T** = Top Mount, **S** = Side Mount, **N** = MID drive Side Mount, **M** = MID drive Bottom Mount
- **Documentation Language: M** = US, **U** = Europe
- **Prefix: 2L** = End drive mount packages for 2700 Product

## Light Load, Fixed Speed

**Chart 1** Parallel Shaft

- Sealed gearmotor
- Totally enclosed, non-ventilated
- Includes switch, cord and overload protection on 1 Phase unit
- 115V, 1 Phase
- 230V, 3 Phase
- 60 Hz

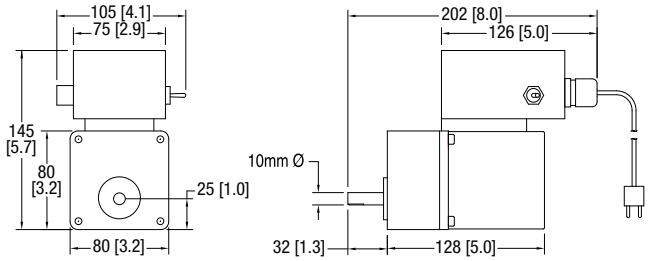


Regulatory Approvals

| Part Number | RPM | Gearmotor Type | Hp | kW | 1 Phase | | | 3 Phase | | | Starter Chart |
|---|---|---|---|---|---|---|---|---|---|---|---|
| | | | | | FLA | in.-lbs. | Nm | FLA | in.-lbs. | Nm | |
| 62M036PL4(vp)F(N) | 42 | L | 0.03 | 0.025 | 0.46 | 26 | 2.9 | 0.22 | 37 | 4.2 | H |
| 62M015PL4(vp)F(N) | 100 | L | 0.03 | 0.025 | 0.46 | 12 | 1.4 | 0.22 | 16.8 | 1.9 | H |

(vp) = Voltage and Phase 11 = 115V, 1 phase 23 = 230V, 3 phase (n) = Reversing capability **N** = No reversing switch **R** = With reversing switch

## Light Load, Variable Speed

**Chart 18** Parallel Shaft VFD Rated

- VFD Variable Speed
- 230V, 3 Phase, 10 to 60 Hz
- Totally enclosed, non-ventilated
- Order controller separately, see page 65-67

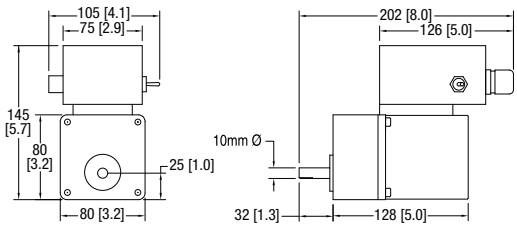


Regulatory Approvals

| Part Number | MAX RPM | MIN RPM | Gearmotor Type | Hp | kW | FLA | in.-lbs. | Nm | Vari - Speed Control Chart |
|---|---|---|---|---|---|---|---|---|---|
| 62M036PL423EN | 42 | 7 | L | 0.03 | 0.025 | 0.22 | 37 | 4.2 | E |
| 62M015PL423EN | 100 | 17 | L | 0.03 | 0.025 | 0.22 | 16.8 | 1.9 | E |

**Chart 25** Parallel Shaft Brushless DC

- Closed loop brushless DC with hall effect feedback
- Sealed gearbox
- IP65 totally enclosed non-ventilated motor
- 100 to 3000 rpm motor
- Includes motor cord with quick disconnect
- Order controller separately, see page 65-67

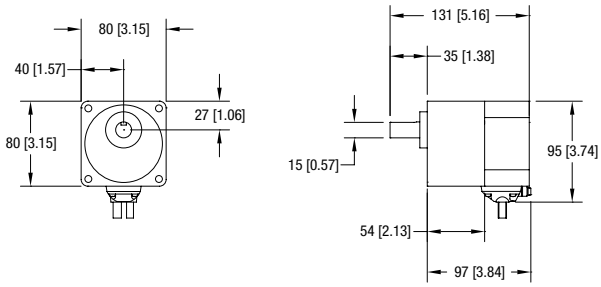


Regulatory Approvals

| Part Number | MAX RPM | MIN RPM | Gearmotor Type | Hp | kW | FLA | in.-lbs. | Nm | Vari-Speed Control Chart |
|---|---|---|---|---|---|---|---|---|---|
| 62M050PLBDDENB | 60 | 2 | A | 0.083 | 0.06 | see control | 70 | 7.7 | F |
| 62M020PLBDDENB | 150 | 5 | A | 0.083 | 0.06 | see control | 25 | 2.8 | F |
| 62M015PLBDDENB | 200 | 7 | A | 0.083 | 0.06 | see control | 18 | 2 | F |

**FLA** = Full Load Amperes

Some motors and gear reducers may normally operate hot to the touch. Consult factory for specific operating temperatures. **Dim = mm** (in)

## Standard Load, Fixed Speed

### Chart 4 — 90°

- Sealed gearmotor
- NEMA 42 CZ C Face
- Totally enclosed, fan cooled
- 115V 1 phase includes switch, cord and overload protection
- 208-230/460 Volts, 3 phase wiring by others
- 60 Hz
- Order 3 phase starter separately, see page 68

eDrive®

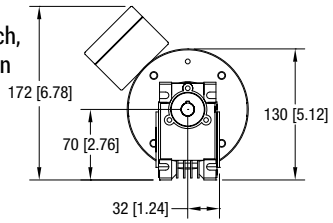


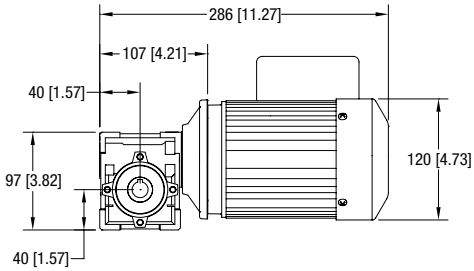


Regulatory Approvals

| Part Number | RPM | Gearmotor Type | 1 Phase | | | 3 Phase | | | in.-lbs. | Nm | 3 Phase Starter Chart |
|---|---|---|---|---|---|---|---|---|---|---|---|
| | | | Hp | kW | FLA | Hp | kW | FLA | | | |
| 62M060ES4(vp)FN | 29 | S | 0.25 | 0.19 | 3.1 | 0.38 | 0.29 | 1.9 / 0.95 | 134/134 | 15.1/15.1 | M |
| 62M040ES4(vp)FN | 43 | S | 0.25 | 0.19 | 3.1 | 0.38 | 0.29 | 1.9 / 0.95 | 160/160 | 18.1/18.1 | M |
| 62M020ES4(vp)FN | 86 | S | 0.25 | 0.19 | 3.1 | 0.38 | 0.29 | 1.9 / 0.95 | 133/151 | 15/17.1 | M |
| 62M010ES4(vp)FN | 173 | S | 0.25 | 0.19 | 3.1 | 0.38 | 0.29 | 1.9 / 0.95 | 75/114 | 8.5/12.9 | M |
| 62M005ES4(vp)FN | 345 | S | 0.25 | 0.19 | 3.1 | 0.38 | 0.29 | 1.9 / 0.95 | 39/60 | 4.4/6.8 | M |

(vp) = Voltage and Phase 11 = 115V, 1 phase 23 = 208 - 230 / 460V, 3 phase

### Chart 5 — Parallel Shaft

- Sealed gearmotor
- Totally enclosed, fan cooled
- 115V 1 phase includes switch, cord and overload protection
- 230/460 Volts, 3 phase wiring by others
- 60 Hz
- Order 3 phase starter separately, see page 68

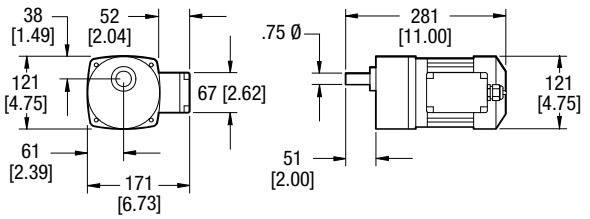


Regulatory Approvals

| Part Number | RPM | Gearmotor Type | 1 Phase | | | | 3 Phase | | | | Nm | 3 Phase Starter Chart |
|---|---|---|---|---|---|---|---|---|---|---|---|---|
| | | | Hp | kW | FLA | in.-lbs. | Hp | kW | FLA | in.-lbs. | | |
| 62M180PS4(vp)F(n) | 10 | S | 0.17 | 0.13 | 1.9 | 341 | 0.17 | 0.13 | 1.0 / 0.5 | 341 | 38.5 | L |
| 62M060PS4(vp)F(n) | 29 | S | 0.17 | 0.13 | 1.9 | 270 | 0.17 | 0.13 | 1.0 / 0.5 | 270 | 30.5 | L |
| 62M030PS4(vp)F(n) | 58 | S | 0.17 | 0.13 | 1.9 | 135 | 0.38 | 0.28 | 1.9 / 0.95 | 250 | 15.3 | M |
| 62M020PS4(vp)F(n) | 86 | S | 0.17 | 0.13 | 1.9 | 90 | 0.38 | 0.28 | 1.9 / 0.95 | 167 | 10.2 | M |
| 62M010PS4(vp)F(n) | 173 | S | 0.17 | 0.13 | 1.9 | 45 | 0.38 | 0.28 | 1.9 / 0.95 | 115 | 5.1 | M |
| 62M005PS4(vp)F(n) | 345 | S | 0.17 | 0.13 | 1.9 | 25 | 0.38 | 0.28 | 1.9 / 0.95 | 58 | 2.8 | M |

(vp) = Voltage and Phase 11 = 115V, 1 phase 23 = 230/460V, 3 phase
(n) = Reversing Capability N = No reversing switch R = With reversing switch (115V, 1 phase only)

## Standard Load, Fixed Speed (continued)

**Chart 6** CE 90°

- Sealed gearmotor
- IEC 63 B5 C Face
- IP 55 protection rating
- Totally enclosed, fan cooled
- Non-reversing
- 50 Hz
- Order starter separately, see page 68

eDrive®

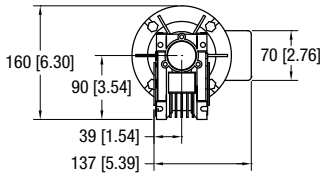


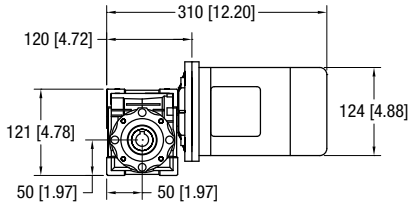


| Part Number | RPM | Gearmotor Type | 1Ph | | 3 Ph | | Nm | Starter Chart |
|---|---|---|---|---|---|---|---|---|
| | | | kW | FLA | kW | FLA | | |
| 62Z060ES4(vp)FN | 23 | S | 0.18 | 1.6 | 0.25 | 1.56/0.9 | 36/36 | I |
| 62Z040ES4(vp)FN | 35 | S | 0.18 | 1.6 | 0.25 | 1.56/0.9 | 26.9/35.5 | I |
| 62Z020ES4(vp)FN | 70 | S | 0.18 | 1.6 | 0.25 | 1.56/0.9 | 16/21.2 | I |
| 62Z010ES4(vp)FN | 140 | S | 0.18 | 1.6 | 0.25 | 1.56/0.9 | 8.7/11.4 | I |
| 62Z005ES4(vp)FN | 280 | S | 0.18 | 1.6 | 0.25 | 1.56/0.9 | 4.5/5.9 | I |

(vp) = Voltage and Phase 21 = 230V, 1 phase
23 = 230V, 3 phase 43 = 400V, 3 phase

CE **Note:** When buying a gearmotor only without the starter, the customer must supply their own on/off switch and motor overload protection to comply with the CE Safety Directive.

**Chart 19** 90° SEW

- SEW WA20 Gearmotor
- Bottom, Center and Side mount packages available
- 230 / 460 V 3 Phase
- VFD Compatible with constant torque from 10 to 60 Hz
- Sealed gear head, totally enclosed fan cooled motor

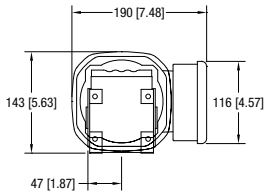


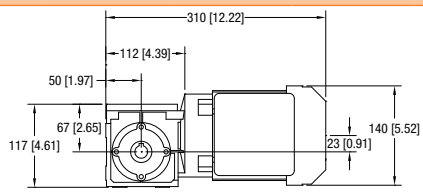


| Part Number | RPM | Gearmotor Output Shaft | Gearmotor Type | Hp | kW | FLA | in-lbs | Nm | 3 Phase Starter Chart |
|---|---|---|---|---|---|---|---|---|---|
| 22M039WS423EN | 46 | W | S | 0.25 | 0.19 | 0.89 / 0.44 | 203 | 22.9 | L |
| 22M017WS423EN | 109 | W | S | 0.33 | 0.25 | 1.24 / 0.62 | 159 | 18.0 | L |
| 22M008WS423EN | 219 | W | S | 0.50 | 0.37 | 1.84 / 0.92 | 132 | 14.9 | M |

**FLA** = Full Load Amperes
Some motors and gear reducers may normally operate hot to the touch. Consult factory for specific operating temperatures. **Dim = mm** (in)

## Standard Load, Variable Speed

### Chart 28 — 90° VFD Rated

- Variable frequency drive, 10 to 60 Hz
- Sealed gearbox
- Nema 42CZ C face
- Totally enclosed, fan cooled
- 230/460Volts, 3 Phase
- Order controller separately
- UL and CSA Listed, RoHS compliant

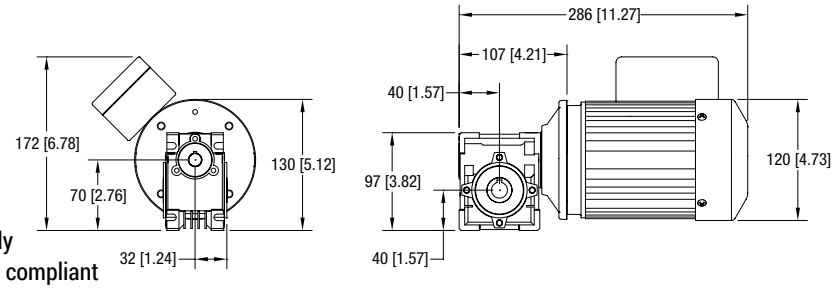


Regulatory Approvals

| Part Number | MAX RPM | MIN RPM | Gearmotor Type | Hp | kW | FLA | in-lbs | Nm | Vari - Speed Control Chart |
|---|---|---|---|---|---|---|---|---|---|
| 62M060ES423EN | 29 | 5 | S | 0.38 | 0.28 | 1.9 / 0.95 | 134 | 15.1 | D and E |
| 62M040ES423EN | 43 | 7 | S | 0.38 | 0.28 | 1.9 / 0.95 | 160 | 18.1 | D and E |
| 62M020ES423EN | 86 | 14 | S | 0.38 | 0.28 | 1.9 / 0.95 | 151 | 17.1 | D and E |
| 62M010ES423EN | 173 | 29 | S | 0.38 | 0.28 | 1.9 / 0.95 | 114 | 12.9 | D and E |
| 62M005ES423EN | 345 | 58 | S | 0.38 | 0.28 | 1.9 / 0.95 | 60 | 6.8 | D and E |

### Chart 8 — 90° VFD Rated

eDrive®

- Variable frequency drive, 6 - 60 Hz
- Sealed gearmotor
- NEMA 56C C Face
- Totally enclosed, fan cooled
- 208-230/460 Volts, 3 phase
- Order controller separately, see page 65-67

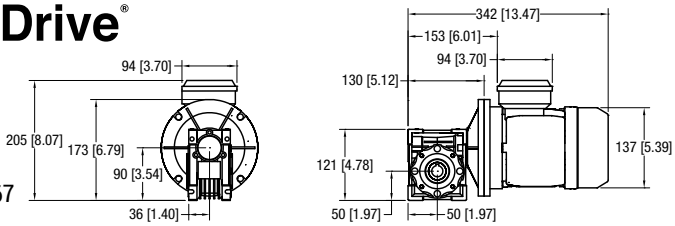


Regulatory Approvals

| Part Number | MAX RPM | MIN RPM | Gearmotor Type | Hp | kW | FLA | in.-lbs. | Nm* | Vari-Speed Control Chart |
|---|---|---|---|---|---|---|---|---|---|
| 32M060EL423EN | 29 | 3 | K | 0.5** | 0.37 | 1.76-1.71 / 1.14 | 319 | 36 | D and E |
| 32M040EL423EN | 43 | 4 | K | 0.5** | 0.37 | 1.76-1.71 / 1.14 | 238 | 26.9 | D and E |
| 32M020EL423EN | 86 | 9 | K | 0.5** | 0.37 | 1.76-1.71 / 1.14 | 142 | 16.0 | D and E |
| 32M010EL423EN | 173 | 17 | K | 0.5** | 0.37 | 1.76-1.71 / 1.14 | 77 | 8.7 | D and E |
| 32M005EL423EN | 345 | 35 | K | 0.5** | 0.37 | 1.76-1.71 / 1.14 | 40 | 4.5 | D and E |

* = At 60 Hz ** = Motor de-rated to 0.25 Hp for full torque throughout speed range.

### Chart 9 — CE 90°

eDrive®

- Variable frequency drive, 25-63 Hz
- Sealed gearmotor
- IEC 63 B5 C Face
- IP 55 protection rating
- Totally enclosed, fan cooled
- 230/400 Volts, 3 phase
- Order controller separately, see page 65-67

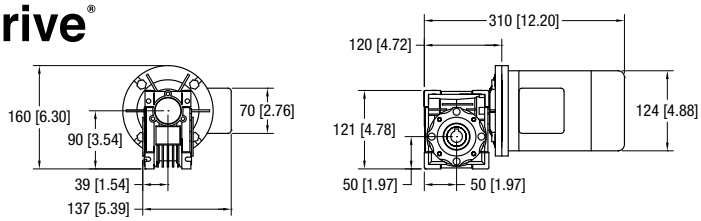


| Part Number | MAX RPM | MIN RPM | Gearmotor Type | 3 Ph kW | 3 Ph FLA | Nm* | Vari-Speed Control Chart |
|---|---|---|---|---|---|---|---|
| 62Z060ES423EN | 29 | 12 | S | 0.25 | 1.56 / 0.9 | 36 | B |
| 62Z040ES423EN | 44 | 18 | S | 0.25 | 1.56 / 0.9 | 35.5 | B |
| 62Z020ES423EN | 88 | 35 | S | 0.25 | 1.56 / 0.9 | 21.2 | B |
| 62Z010ES423EN | 176 | 70 | S | 0.25 | 1.56 / 0.9 | 11.4 | B |
| 62Z005ES423EN | 353 | 140 | S | 0.25 | 1.56 / 0.9 | 5.9 | B |

* = At 50 Hz

CE **Note:** When buying a gearmotor only without the starter, the customer must supply their own on/off switch and motor overload protection to comply with the CE Safety Directive.

**FLA =** Full Load Amperes

Some motors and gear reducers may normally operate hot to the touch. Consult factory for specific operating temperatures. **Dim = mm** (in)

## Standard Load, Variable Speed (continued)

### Chart 11 — Parallel Shaft VFD Rated

- Variable frequency drive, 10 to 60 Hz
- Sealed gearmotor
- Totally enclosed, fan cooled
- 230/460 Volts / 3 Phase, VFD duty
- Order controller separately, see page 65-67

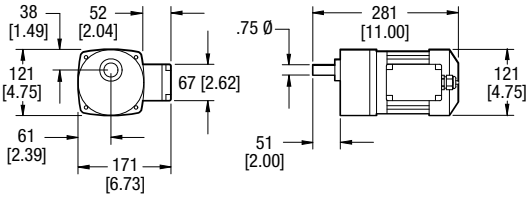


Regulatory Approvals

| Part Number | MAX RPM | MIN RPM | Gearmotor Type | Hp | kW | FLA | in.-lbs. | Nm | Vari - Speed Control Chart |
|---|---|---|---|---|---|---|---|---|---|
| 62M180PS423EN | 10 | 2 | S | 0.17 | 0.13 | 1.0 / 0.5 | 341 | 38.5 | D and E |
| 62M060PS423EN | 29 | 5 | S | 0.17 | 0.13 | 1.0 / 0.5 | 270 | 30.5 | D and E |
| 62M030PS423EN | 58 | 10 | S | 0.38 | 0.28 | 1.9 / 0.95 | 250 | 28.3 | D and E |
| 62M020PS423EN | 86 | 14 | S | 0.38 | 0.28 | 1.9 / 0.95 | 167 | 18.9 | D and E |
| 62M010PS423EN | 173 | 29 | S | 0.38 | 0.28 | 1.9 / 0.95 | 115 | 13.0 | D and E |
| 62M005PS423EN | 345 | 58 | S | 0.38 | 0.28 | 1.9 / 0.95 | 58 | 6.5 | D and E |

### Chart 26 — Parallel Shaft Brushless DC

- Closed loop brushless DC with hall effect feedback
- Sealed gearbox
- IP65 totally enclosed non-ventilated motor
- 100 to 3000 rpm motor
- Includes motor cord with quick disconnect
- Order controller separately, see page 65-67

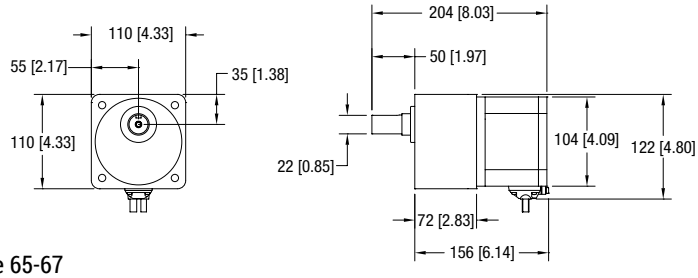


Regulatory Approvals

RoHS

| Part Number | MAX RPM | MIN RPM | Gearmotor Type | Hp | kW | FLA | in.-lbs. | Nm | Vari-Speed Control Chart |
|---|---|---|---|---|---|---|---|---|---|
| 62M050PSBDDENB | 60 | 2 | B | 0.25 | 0.2 | see control | 240 | 27.1 | F |
| 62M020PSBDDENB | 150 | 5 | B | 0.25 | 0.2 | see control | 101 | 11.4 | F |
| 62M010PSBDDENB | 300 | 10 | B | 0.25 | 0.2 | see control | 50 | 5.6 | F |

### Chart 20 — 90° SEW

- SEW WA20 Gearmotor
- Bottom, Center and Side mount packages available
- 230 / 460 V 3 Phase
- VFD Compatible with constant torque from 10 to 60 Hz
- Sealed gear head, totally enclosed fan cooled motor

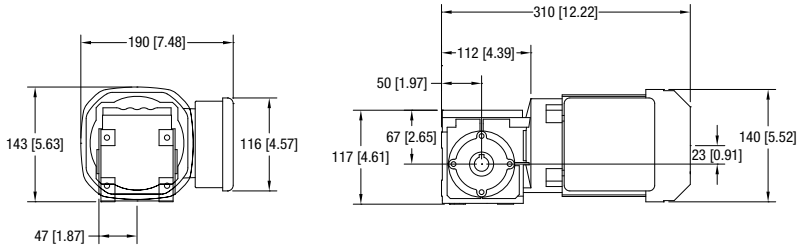


| Part Number | MAX RPM | MIN RPM | Gearmotor Output Shaft | Gearmotor Type | Hp | kW | FLA | in-lbs | Nm | Vari - Speed Control Chart |
|---|---|---|---|---|---|---|---|---|---|---|
| 22M039WS423EN | 46 | 8 | W | S | 0.25 | 0.19 | 0.89 / 0.44 | 203 | 22.9 | D and E |
| 22M017WS423EN | 109 | 18 | W | S | 0.33 | 0.25 | 1.24 / 0.62 | 159 | 18.0 | D and E |
| 22M008WS423EN | 219 | 37 | W | S | 0.50 | 0.37 | 1.84 / 0.92 | 132 | 14.9 | D and E |

**FLA** = Full Load Amperes
Some motors and gear reducers may normally operate hot to the touch. Consult factory for specific operating temperatures. **Dim = mm** (in)

## Heavy Load, Fixed Speed

**Chart 12** 90°

- Sealed gearmotor
- NEMA 56 C Face
- Totally enclosed, fan cooled
- 115V 1 phase includes switch, cord and overload protection
- 208-230/460 Volts, 3 phase wiring by others
- 60 Hz
- Order 3 phase starter separately, see page 68

eDrive®

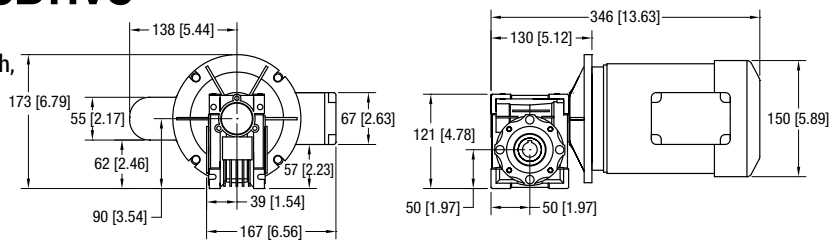


Regulatory Approvals

| Part Number | RPM | Gearmotor Type | 1 Phase | | | 3 Phase | | | in.-lbs. | Nm | 3 Phase Starter Chart |
|---|---|---|---|---|---|---|---|---|---|---|---|
| | | | Hp | kW | FLA | Hp | kW | FLA | | | |
| 32M060ES4(vp)FN | 29 | H | 0.5 | 0.37 | 5.7 | 0.5 | 0.37 | 1.76-1.71 / 1.14 | 319 | 36 | M |
| 32M040ES4(vp)FN | 43 | H | 0.5 | 0.37 | 5.7 | 0.5 | 0.37 | 1.76-1.71 / 1.14 | 378 | 42.7 | M |
| 32M020ES4(vp)FN | 86 | H | 0.5 | 0.37 | 5.7 | 0.5 | 0.37 | 1.76-1.71 / 1.14 | 285 | 32.2 | M |
| 32M010ES4(vp)FN | 173 | H | 0.5 | 0.37 | 5.7 | 0.5 | 0.37 | 1.76-1.71 / 1.14 | 153 | 17.3 | M |
| 32M005ES4(vp)FN | 345 | H | 0.5 | 0.37 | 5.7 | 0.5 | 0.37 | 1.76-1.71 / 1.14 | 80 | 9 | M |
| 32M005ES223FN | 672 | H | – | – | – | 0.75 | 0.55 | 2.15 / 1.37 | 33 | 3.7 | M |

(vp) = Voltage and Phase 11 = 115V, 1 phase 23 = 208 - 230 / 460V, 3 phase

## Heavy Load, Variable Speed

**Chart 15** 90° VFD Rated

- Variable frequency drive, 6 - 60 Hz
- Sealed gearmotor
- NEMA 56 C Face
- Totally enclosed, fan cooled
- 230/460 Volts, 3 Phase
- Order controller separately, see page 65-67

eDrive®

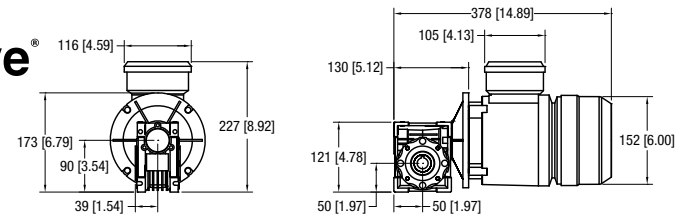


Regulatory Approvals

| Part Number | MAX RPM | MIN RPM | Gearmotor Type | 3 Ph Hp | 3 Ph kW | 3 Ph FLA | in.-lbs.* | Nm* |
|---|---|---|---|---|---|---|---|---|
| 32M060ES423EN | 29 | 3 | H | 0.75** | 0.55 | 2.6 / 1.3 | 319 | 36 |
| 32M040ES423EN | 43 | 4 | H | 0.75** | 0.55 | 2.6 / 1.3 | 378 | 42.7 |
| 32M020ES423EN | 86 | 9 | H | 0.75** | 0.55 | 2.6 / 1.3 | 285 | 32.2 |
| 32M010ES423EN | 173 | 17 | H | 0.75** | 0.55 | 2.6 / 1.3 | 153 | 17.3 |
| 32M005ES423EN | 345 | 35 | H | 0.75** | 0.55 | 2.6 / 1.3 | 80 | 9 |
| 32M005ES223EN | 672 | 67 | H | 0.75** | 0.55 | 2.15 / 1.37 | 33 | 3.7 |

* = At 60 Hz ** = Motor de-rated to 0.5 Hp for full torque throughout speed range

**Chart 29** 90° VFD Rated

- Variable frequency drive, 6 - 60 Hz
- Sealed gearmotor
- NEMA 56 C Face
- Totally enclosed, fan cooled
- 575 Volts, 3 Phase

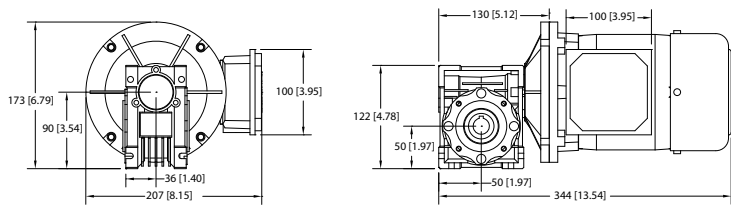


Regulatory Approvals

| Part Number | MAX RPM | MIN RPM | Gearmotor Type | 3 Ph Hp | 3 Ph kW | 3 Ph FLA | in.-lbs.* | Nm* | Vari Speed Control Chart |
|---|---|---|---|---|---|---|---|---|---|
| 32M060ES453EN | 29 | 3 | H | 0.5 | 0.37 | 0.76 | 319 | | Customer Supplied |
| 32M040ES453EN | 43 | 4 | H | 0.5 | 0.37 | 0.76 | 378 | | Customer Supplied |
| 32M020ES453EN | 86 | 9 | H | 0.5 | 0.37 | 0.76 | 285 | | Customer Supplied |
| 32M010ES453EN | 173 | 17 | H | 0.5 | 0.37 | 0.76 | 153 | | Customer Supplied |
| 32M005ES453EN | 345 | 34 | H | 0.5 | 0.37 | 0.76 | 80 | | Customer Supplied |

* = At 60 Hz

**FLA** = Full Load Amperes

Some motors and gear reducers may normally operate hot to the touch. Consult factory for specific operating temperatures. **Dim = mm** (in)

## Control Product Family

### 2700 iDrive2 Controls

**(see page 24)**

Brushless DC Controls, 24VDC with preset speeds programed ready to use package

### Basic VFD Control

**(see page 81)**

Simple on/off, direction, and speed control right at the side of the conveyor

### Full Feature VFD Control

**(see page 80)**

All the features of a Basic VFD with options to control remotely from a Dorner accessory, discrete I/O, or using a variety of industrial network protocols

### Full Feature VFD with Accessory

**(see page 80, 85-86)**

Full feature control with M12 Accessory port for a variety of applications

### Brushless DC Control

**(see page 81)**

Provides a compact alternative to other solutions while providing indexing capabilities of 60 indexes per minute with accuracy less than 3.2 mm (1/16 in)

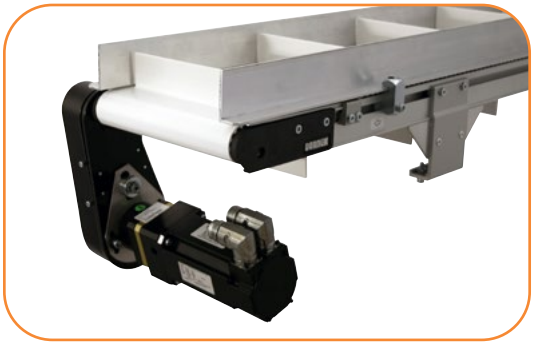

### Servo Motor Control

**(see page 83-84)**

Provides programmable move profiles and indexing control up to 100 per minute at accuracies of 1 mm (0.040 in)

## Variable Speed Controllers

### Chart B — VFD Controller, Full CE Compliance

- VFD control
- IP 65 enclosure
- EMC filter
- Variable speed
- Mounting hardware
- Line cord and motor cord
- Motor cord only on 460V

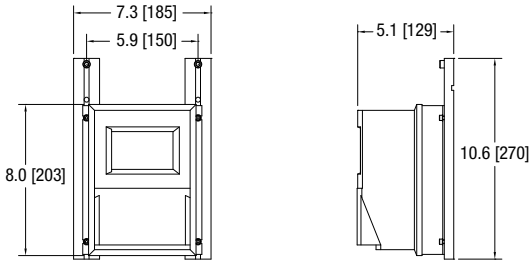


Regulatory Approvals

| Part Number | Input Volts | Input Phase | Input Hz | Output Volts | Output Phase | Max Kw* | Max Amps | Reversing |
|---|---|---|---|---|---|---|---|---|
| 62UV2121(O) | 230 | 1 | 50 | 230 | 3 | 0.75 | 4.2 | Yes |
| 62UV4341(O) | 400 | 3 | 50 | 400 | 3 | 0.75 | 2.1 | Yes |
| 62UV2127(O) | 230 | 1 | 50 | 230 | 3 | 1.50 | 6.8 | Yes |
| 62UV4347 (O) | 400 | 3 | 50 | 400 | 3 | 1.50 | 3.4 | Yes |

(O) = Optional M12 Accessory Port No Option = No Accessory Port E = M12 Port wired for End Stop Photo Eye Application I = M12 port wired for Index Photo Eye Application
Note: E or I options will work with Dorner Control Stop or Jog Button Accessories

### Chart D — Full Feature VFD Controller

- Full feature VFD control
- NEMA 4 enclosure
- Digital display
- Keypad with Start/Stop, Forward/Reverse and speed variations
- Includes cord to motor
- Power to controller by others
- 62MV1122 includes line cord to controller
- Mounting hardware

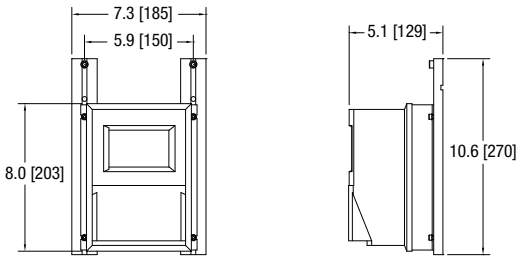


Regulatory Approvals

| Part Number | Input Volts | Input Phase | Input Hz | Output Volts | Output Phase | Max Hp | Output Amps* | Reversing |
|---|---|---|---|---|---|---|---|---|
| 32MV1122(O) | 115 | 1 | 60 | 230 | 3 | 0.5 | 2.2 | Yes |
| 32MV2122(O) | 230 | 1 | 60 | 230 | 3 | 0.5 | 2.2 | Yes |
| 32MV1121(O) | 115 | 1 | 60 | 230 | 3 | 1.0 | 4.0 | Yes |
| 32MV2121(O) | 230 | 1 | 60 | 230 | 3 | 1.0 | 4.0 | Yes |
| 32MV2127(O) | 230 | 1 | 60 | 230 | 3 | 2.0 | 6.8 | Yes |
| 32MV2322(O) | 230 | 3 | 60 | 230 | 3 | 0.5 | 2.2 | Yes |
| 32MV2327(O) | 230 | 3 | 60 | 230 | 3 | 2.0 | 6.8 | Yes |
| 32MV4341(O) | 460 | 3 | 60 | 460 | 3 | 1.0 | 2.0 | Yes |
| 32MV4347(O) | 460 | 3 | 60 | 460 | 3 | 2.0 | 3.4 | Yes |

In order for this drive to meet full CE requirements for European application a separate CE approve RFI filter must be installed. Product shown in chart B above have this filter pre-installed and are recommended for use in the European Union.

(O) = Optional M12 Accessory Port No Option = No Accessory Port E = M12 Port wired for End Stop Photo Eye Application
I = M12 port wired for Index Photo Eye Application
Note: E or I options will work with Dorner Control Stop or Jog Button Accessories

* = See FLA from motor charts **Dim = mm** (in)

## Variable Speed Controllers (continued)

### Chart E — Basic VFD Controller

- Variable Speed Drive
- On/off buttons and knob for speed on keypad
- Direction setting via parameter change
- Includes mounting bracket that can mount drive to vertical or horizontal T-slot
- Includes 10ft input power cord with three prong standard 120V outlet plug
- Includes 10ft motor output cord for 3 phase motor connection with flying leads
- IP 20 rating with electrical finger safe connections
- Pre-programed to match motor parameters and locked parameter settings for ease of uses
- cULus and CE compliant

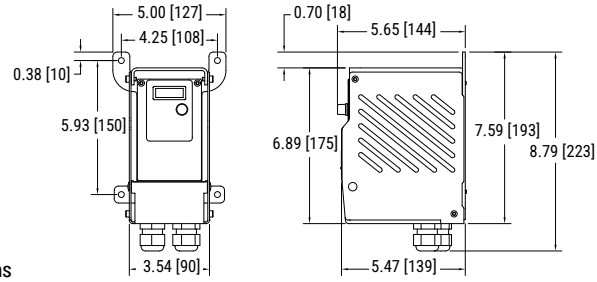


Regulatory Approvals

| Part Number | Input Volts | Input Phase | Input Hz | Output Volts | Output Phase | Max Hp | Max Amps | Reversing |
|---|---|---|---|---|---|---|---|---|
| 22MV1126T | 115 | 1 | 60 | 230 | 3 | 0.125-0.5 | 2.6 | Yes* |

*Reversing is controlled by parameter change

### Chart F — Brushless DC Controller

- Closed loop brushless DC with hall effect feedback
- Nema 1 plastic enclosure
- Digital keypad and display
- Programmable speed, acceleration and deceleration
- Remote on / off and speed capable with wire access hole in enclosure provided
- Includes motor cord with quick disconnect and power cord (single phase only)
- Includes mounting brackets and hardware

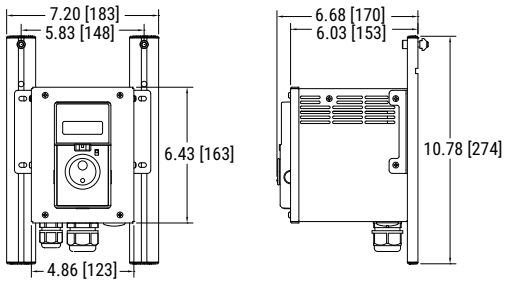


Regulatory Approvals

| Part Number | Input Volts | Input Phase | Input Hz | Max Input Amps | Output | Max Watts | Reversing |
|---|---|---|---|---|---|---|---|
| 63MBD11B60B | 115 | 1 | 60 | 4.5 | BDC | 60 | Yes |
| 63MBD23B60B | 230 | 3 | 60 | 1.5 | BDC | 60 | Yes |
| 63MBD11B200B | 115 | 1 | 60 | 8.8 | BDC | 200 | Yes |
| 63MBD23B200B | 230 | 3 | 60 | 3.4 | BDC | 200 | Yes |

* = See FLA from motor charts **Dim = mm** (in)

## Manual Motor Starters

Manual motor starts are manual electronic disconnects that provide motor overload protection and are required by the National Electric Code (NEC) for safe motor operation.

- IP 55 Enclosure
- Push button Start / Stop
- Includes mounting hardware

**Regulatory Approvals**

Illustration **A**

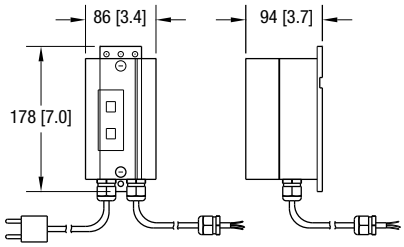


Illustration **B**

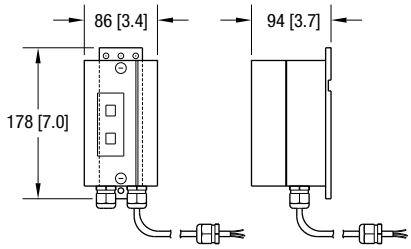


### Chart H

- 230V, 1 phase includes cord, plug & starter
- 230/400 Volts, 3 phase wiring to starter by others
- Wiring between motor and starter provided when ordered together
- 50 Hz

| Part Number | In Volts | In Phase | Amp Range | Illustration |
|---|---|---|---|---|
| 62UM21H | 230 | 1 | 0.25 - 0.4 | A |
| 62UM23H | 230 | 3 | 0.16 - 0.25 | B |
| 62UM43H | 400 | 3 | 0.1 - 0.16 | B |

### Chart I — 230/400V 50Hz to 2.5 amp

- 230 Volts, 1 phase includes cord, plug and starter
- 230/400 Volts, 3 phase wiring to starter by others
- Wiring between motor and starter provided when ordered together
- 50 Hz

| Part Number | In Volts | In Phase | Amp Range | Illustration |
|---|---|---|---|---|
| 62UM21T | 230 | 1 | 1.6 - 2.5 | A |
| 62UM23T | 230 | 3 | 1.0 - 1.6 | B |
| 62UM43T | 400 | 3 | 0.63 - 1.0 | B |

### Chart L — 230/460V 60 Hz to 1.6 amp

- 230/460 Volts, 3 phase wiring to starter by others
- Wiring between motor and starter provided when ordered together
- 60 Hz

| Part Number | In Volts | In Phase | Amp Range | Illustration |
|---|---|---|---|---|
| 62MM23L | 230 | 3 | 1.0 - 1.6 | B |
| 62MM43L | 460 | 3 | 0.4 - .63 | B |

### Chart M — 230/460V 60Hz to 2.5 amp

- 230/460 Volts, 3 phase wiring to starter by others
- Wiring between motor and starter provided when ordered together
- 60 Hz

| Part Number | In Volts | In Phase | Amp Range | Illustration |
|---|---|---|---|---|
| 62MM23M | 208 - 230 | 3 | 1.6 - 2.5 | B |
| 62MM43M | 460 | 3 | 1.0 - 1.6 | B |

**Note:** When buying a gearmotor only without the starter, the customer must supply their own on/off switch and motor overload protection to comply with NEC and CE safety directive.

**Dim** = mm (in)

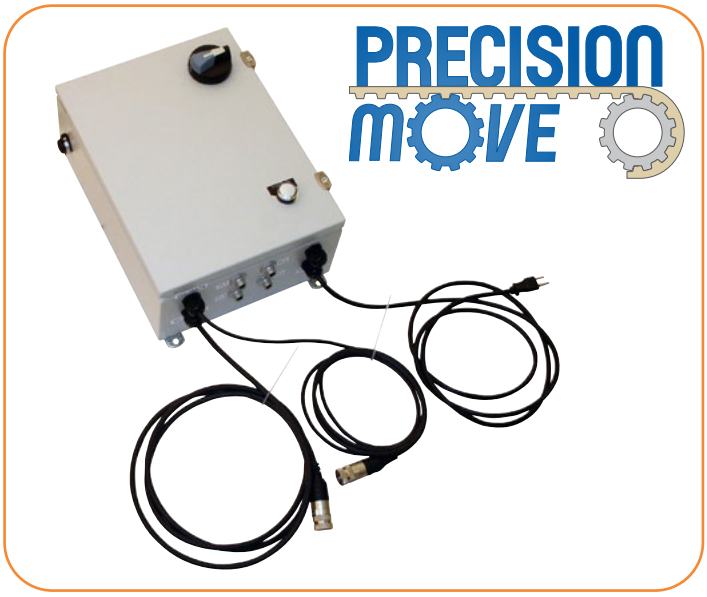


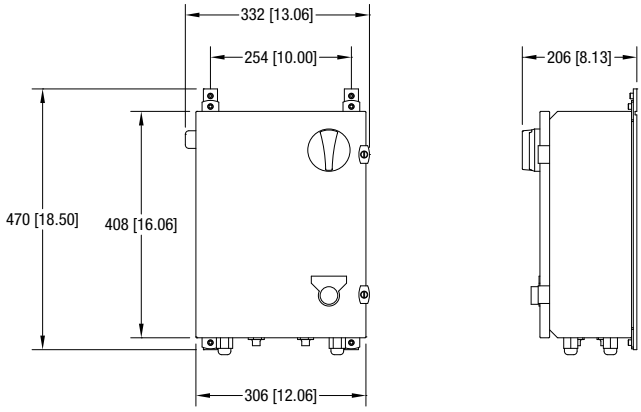


## Specifications

- Quick disconnect cables compatible with Dorner Servo Gearmotors
- Graphical user interface and icons make programming easy
- Spreadsheet-like position programming
- Real time performance feedback software
- Click of a button auto-tuning and wizard tuning per application
- Multiple homing options
- Kollmorgen AKD Series Control
- 1100 watts capacity
- (2) Input voltage options:
  - 115 Volt Single Phase input
  - 230 Volt Single Phase input
- UL listed, CE marked and RoHS compliant drive and components
- UL Labeled Controller Package
- Housed in a Nema 12 enclosure
- Includes high voltage fusing and low voltage power supply
- Quick disconnect motor cabling
- Quick disconnect sensor locations

## Compatible Servo Motors Available

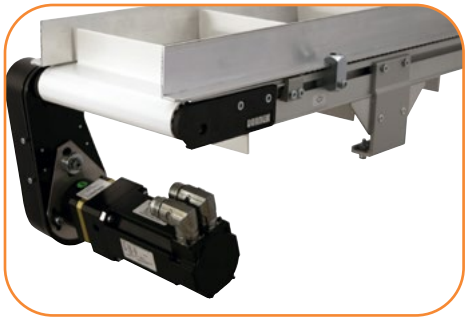

See pages 20 - 25 for more information.

**Gearmotor Compatibility**

| Part Number | Controller Voltage | Max Belt Speed (Ft/min) | | Min Belt Speed (Ft/min) | Torque (in-lb) | RPM |
|---|---|---|---|---|---|---|
| | | Bottom Mount | Flush Mount | | | |
| 22M004PR2B1KW | 115V input | 166 | 253 | 10 | 79 | 325 |
| | 230V input | 276 | 420 | 10 | 79 | 625 |

| Model | Part Number | Input Volts | Input Phase | Input Hz | Cont. Amps | Peak Amps | Cont. Watts |
|---|---|---|---|---|---|---|---|
| 115V Stand Alone* | 75M-S1-11-3 | 115 | 1 | 60 | 3 | 9 | 1100 |
| 115V External Control | 75M-S2-11-3 | 115 | 1 | 60 | 3 | 9 | 1100 |
| 230V Stand Alone* | 75M-S1-21-3 | 230 | 1 | 60 | 3 | 9 | 1100 |
| 230V External Control | 75M-S2-21-3 | 230 | 1 | 60 | 3 | 9 | 1100 |

** Note: For Stand Alone Control Applications, Enable / Index Kit (75M-EN-1) is recommended. See page 81 for details.*

*Due to the wide variety of conveyor and stand options along with possible configurations, stability of the final setup is the responsibility of the end user.*

**Dim** = mm (in)

For Accuracy and Repeatability Chart see page 120

## (2) Servo Control Methods

### Stand Alone Control:

Servo Package is self-contained and the control signal is provided by a connected sensor or push button.

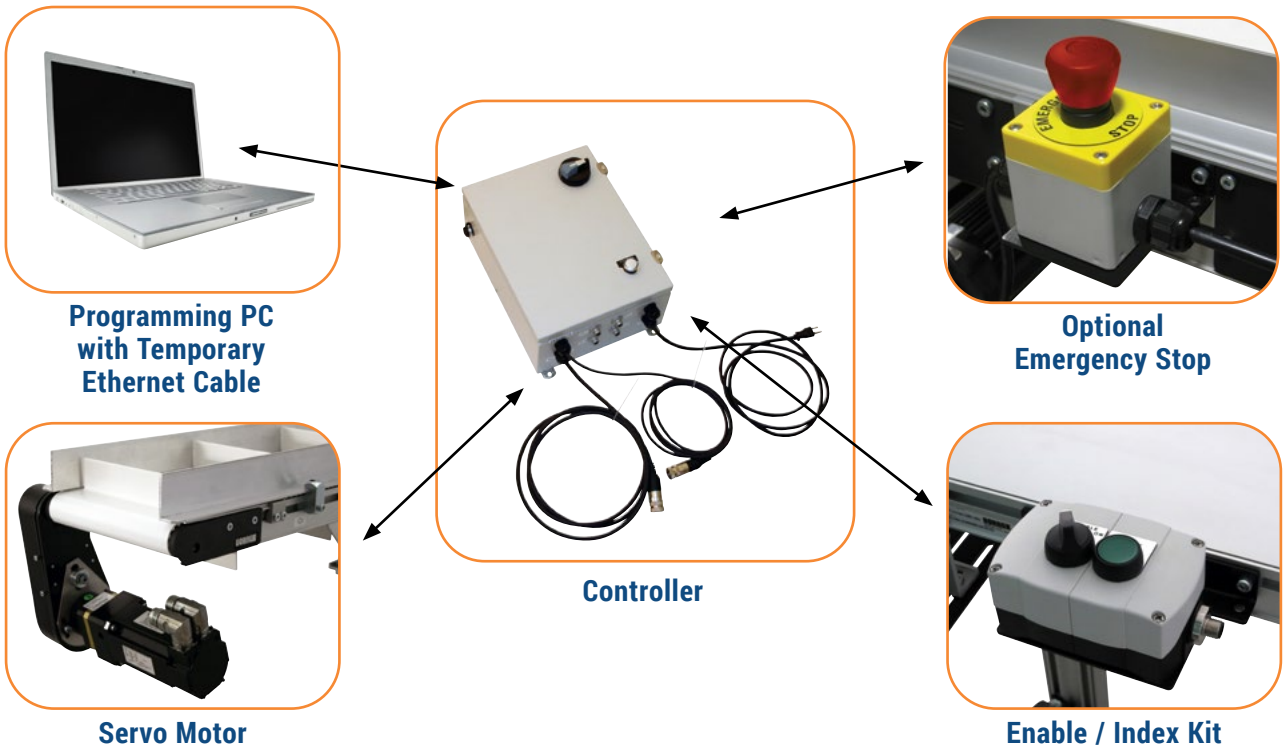


### External Control:

Servo control signal is controlled by an external source such as a PLC or PC.

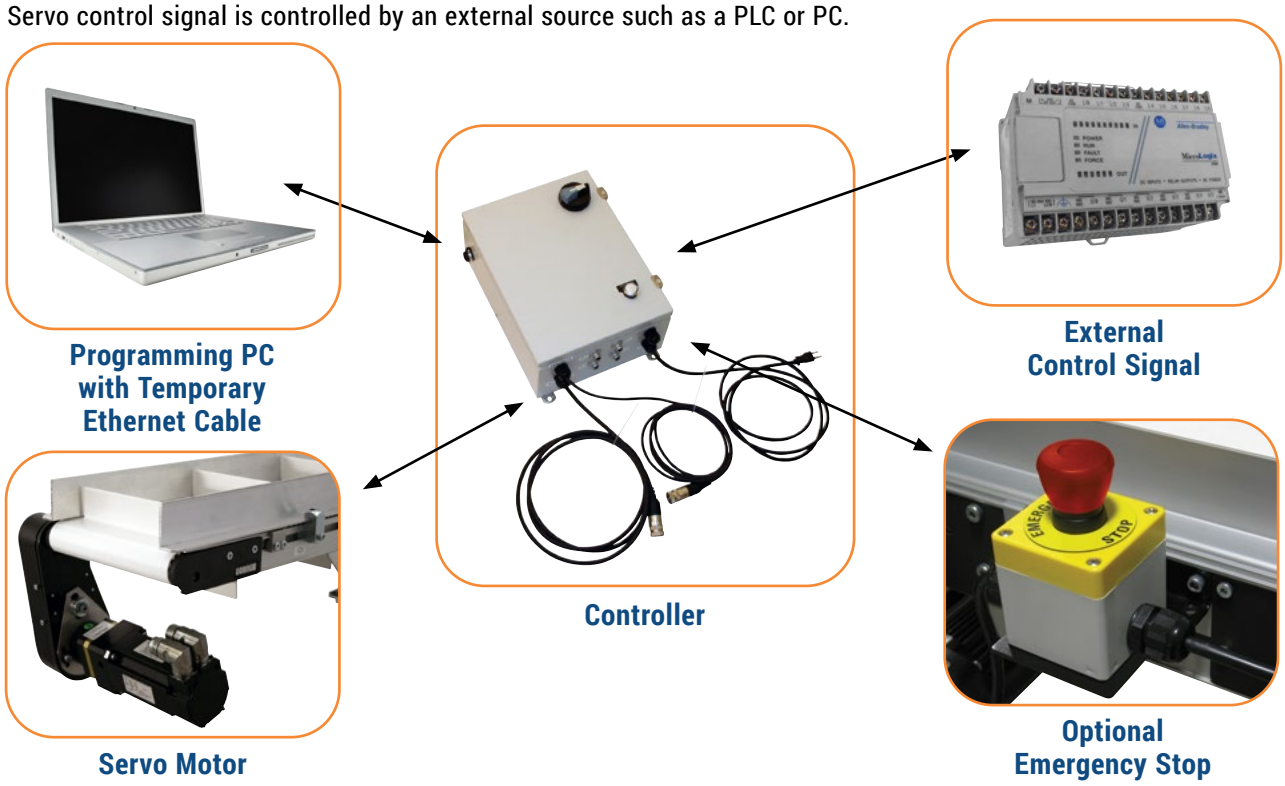

## Stand Alone Servo Control – Enable / Index Kit

### Specifications

- For use with stand alone servo motor controls
- Contains servo enable on/off and index initiate button
- Quick disconnect cable fittings
- Includes mounting bracket and hardware

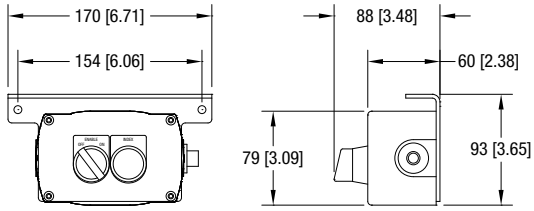


| Part Number | 75M-EN-1 |
|---|---|

## Servo Control – Emergency Stop Kit

### Specifications

- For use with both stand alone and external control servos motor controls
- Plastic Nema 12 Enclosure
- Quick disconnect cable fittings
- Horizontal or vertical mount
- Includes mounting bracket and hardware

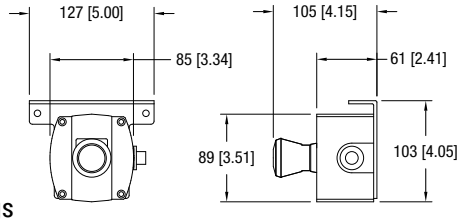


| Part Number | Description |
|---|---|
| 75M-ES-2 | Non-Lighted E-Stop Kit |

## In-Line Cord Emergency Stop Kit

### Specifications

- Push to stop/pull to start push button
- Plastic Nema 12 enclosure
- 115V single phase
- 1/2 hp (0.37 kW) and smaller motors
- Includes power and outlet cords
- Mounting for 2200/3200 and Support Stands
- Horizontal or vertical mount

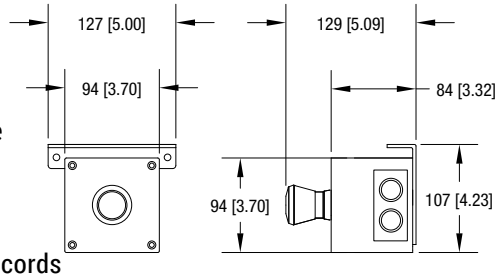


| Part Number | 75M-ES-1 |
|---|---|

## Photo Eye Kits

### Specifications

- 24V DC Retro Reflective Sensor
- Quick disconnect plug
- Includes reflector and mounting
- Fully adjustable mount for 2200/3200 Series conveyors
- 50 mm (2 in) and 127 mm (5 in) adjustment height ranges

| Part Number | Description |
|---|---|
| 75M-PE-1 | 50 mm (2 in) Height Adjustment |
| 75M-PE-2 | 127 mm (5 in) Height Adjustment |
| 75M-PM-1 | 50 mm (2 in) Height Adjustment, Bracket Only, Retroreflective |
| 75M-PM-2 | 127 mm (5 in) Height Adjustment, Bracket Only, Retroreflective |
| 75M-PM-3 | 50 mm (2 in) Height Adjustment, Bracket Only, Through Beam |
| 75M-PM-4 | 127 mm (5 in) Height Adjustment, Bracket Only, Through Beam |
| 75M-PM-5 | 50 mm (2 in) Height Adjustment, Bracket Only, Convergence |
| 75M-PM-6 | 127 mm (5 in) Height Adjustment, Bracket Only, Convergence |

Not compatible with Brushless DC Controllers

**Dim** = mm (in)

## Jog Push Button Kit

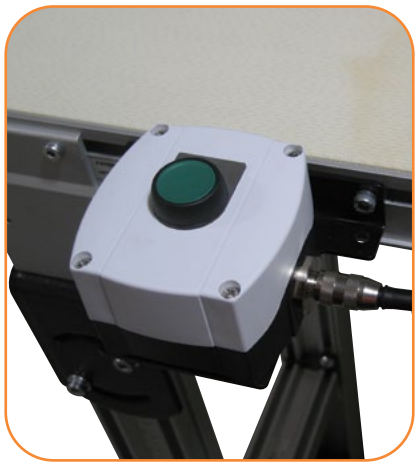

### Specifications

- Momentary contact push button
- Plastic Nema 12 enclosure
- Quick disconnect receptacle
- Mounting for 2200/3200 and Support Stands
- Horizontal or vertical mount

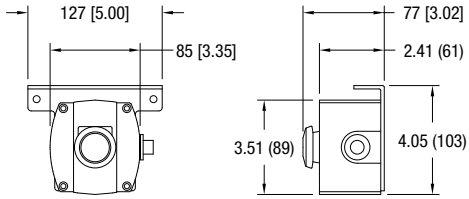


| Part Number | 75M-JG-1 |
|---|---|

Horizontal Mount

Not compatible with Brushless DC Controllers

## Control Stop Kit

### Specifications

- Push to stop/pull to start maintained push button
- Plastic Nema 12 enclosure
- Quick disconnect receptacle
- Mounting for 2200/3200 and Support Stands
- Horizontal or vertical mount

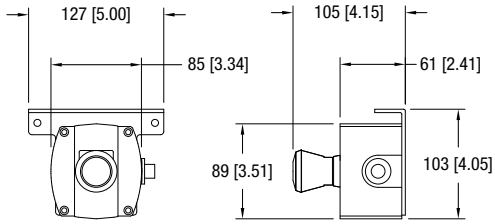


| Part Number | 75M-CS-1 |
|---|---|

Horizontal Mount

Not compatible with Brushless DC Controllers

## Linking Cable Kits (for VFD Indexers)

### Specifications

- Quick disconnect cable for all control devices
- 2 meter and 5 meter lengths
- Includes mounting hardware for T-slots

| Part Number | Description |
|---|---|
| 75M-LC-1 | 1.83 m (6 ft) cable |
| 75M-LC-2 | 4.57 m (15 ft) cable |

**Dim** = mm (in)

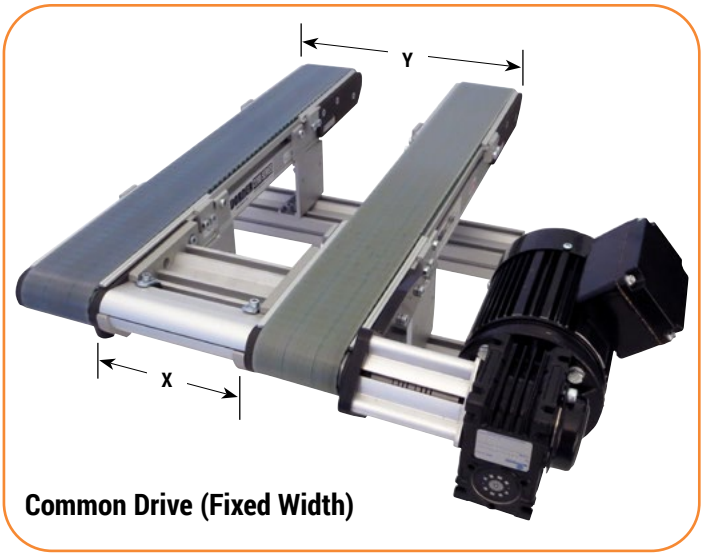


Common Drive (Fixed Width)

## Specifications

- Parts can be wider than conveyor
- Conveyors can be different widths & lengths
- Minimum width (x) = 69 mm (2.70 in)
- Maximum width (y) = 914 mm (36 in) belt to belt
- Maximum number of conveyors = 3
- Maximum total torque = 100 in-lbs
- Keyless coupling allows belt synchronization between conveyors
- Includes shafts, couplings and guards
- Order conveyor tie kits separately
- Requires stub output shafts between conveyors

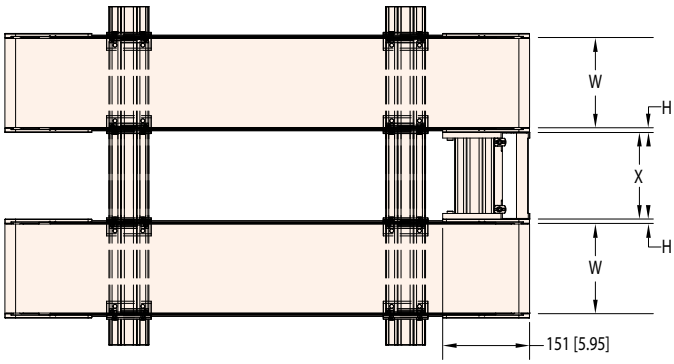


Headplate offset "H"
- Belted = 8.6 (.34)
- Precision Move = 8.6 (.34)
- Modular Belt = 13.2 (.52)

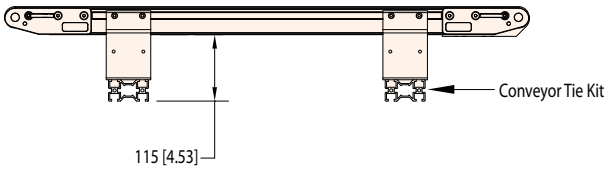


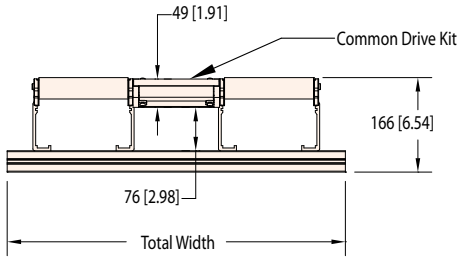


**2200 Series Common Drive Kit**

22CDMK GGGGG
- **00270** (68.9 mm[2.70 in]) to **03600** (914 mm [36.00 in])

**Note:** One kit must be ordered for each pair of conveyors

**Kit Includes:**
- Shafts, couplings and guards
- Rigid tie plate for alignment
- Conveyor must be ordered with stubshaft on fixed end

**2200 Series Common Drive Table Mount Tie Kit**

39MCT WW - Y
- **Number of Conveyors: 1** to **6**
- **Total Width: 02** to **48**

**Kit Includes:**
- Conveyor mounting brackets
- Support extrusion

**Dim = mm** (in)

*Due to the wide variety of drive set ups and applications, point of installation guarding is the responsibility of the end user.*

## Specifications

- Loads up to 119 kg/m (80 lbs/ft)*
- Conveyor widths: 152 mm (6 in), 305 mm (12 in), 457 mm (18 in) and 610 mm (24 in)
- Conveyor lengths: 610 mm (2 ft) to 3,658 mm (12 ft) in 152 mm (6 in) increments
- Single piece frame lengths to 12' long
- Rollers: 25 mm (1 in) diameter rollers on 31 mm (1.2 in), 61 mm (2.4 in) or 91 mm (3.6 in) centers
- Roller Material: Anodized aluminum tube with steel ball bearing
- Side T-slot fits Dorner drop in hardware
- T-slot fits standard M6 square nuts

**OPTIONAL: End Stop**

(See page 86 for more details)

### Load Capacity

| Length | Max. Load** | # of Support Stands |
|---|---|---|
| 610 (2) | 36 kg (80 lbs/ft)* | 2 |
| 914 (3) | 36 kg (80 lbs/ft)* | 2 |
| 1,219 (4) | 18 kg (40 lbs/ft)* | 2 |
| 1,524 (5) | 9 kg (20 lbs/ft)* | 2 |
| 1,829 (6) | 4.5 kg (10 lbs/ft)* | 2 |
| 2,134 (7) | 36 kg (80 lbs/ft)* | 3 |
| 2,438 (8) | 18 kg (40 lbs/ft)* | 3 |
| 2,743 (9) | 18 kg (40 lbs/ft)* | 3 |
| 3,048 (10) | 9 kg (20 lbs/ft)* | 3 |
| 3,353 (11) | 9 kg (20 lbs/ft)* | 3 |
| 3,658 (12) | 4.5 kg (10 lbs/ft)* | 3 |

**Dim** = mm (ft)
* Adding Supports increases capacity to 80lbs/ft.
** Evenly distributed loads

### Roller Quantity

| Length | Roller Centers | | |
|---|---|---|---|
| | 1.2 (31) | 2.4 (61) | 3.6 (91) |
| 610 (2) | 20 | 10 | 6 |
| 914 (3) | 30 | 15 | 10 |
| 1,219 (4) | 40 | 20 | 13 |
| 1,524 (5) | 50 | 25 | 16 |
| 1,829 (6) | 60 | 30 | 20 |
| 2,134 (7) | 70 | 35 | 23 |
| 2,438 (8) | 80 | 40 | 26 |
| 2,743 (9) | 90 | 45 | 30 |
| 3,048 (10) | 100 | 50 | 33 |
| 3,353 (11) | 110 | 55 | 36 |
| 3,658 (12) | 120 | 60 | 40 |

**Dim** = mm (ft)
It is recommended that 3 rollers be in contact with the product at all times.

### Connecting Assembly

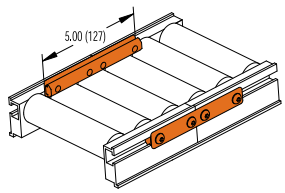


- Includes: Connecting Plates, T-Bars and Attaching Hardware

| Part Number | Description |
|---|---|
| 202596M | Model 2260 |

*For support stands and accessories, see pages 76-81.*

### 2200 Series Gravity Roller

2 2 6 0 M 0 6 - 0 4 5 0 0 1 / 1 2

- **Roller Center Reference**
- **Select Profile**
- **Conveyor Length Reference LLLL** = Length Reference
- **Conveyor Width Reference**
- **Documentation Language: M** = English

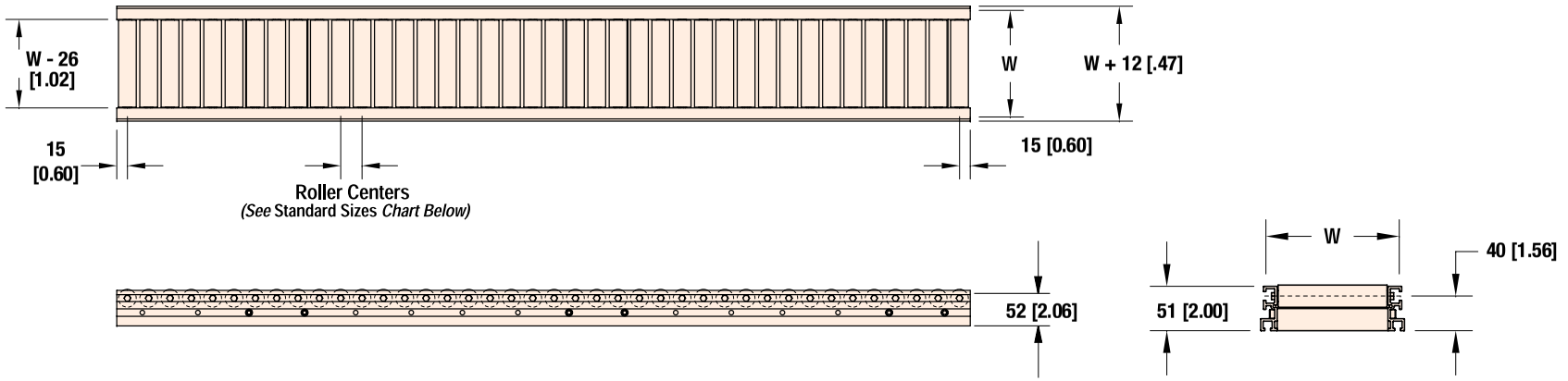


**All conveyors are shipped with a roller at each end. Depending on roller centers, one odd roller space may occur. All frames are punched for rollers 15 mm (.60 in) from each end on 31 mm (1.2 in) centers.**

| STANDARD SIZES | | | | |
|---|---|---|---|---|
| **Conveyor Width Reference** | 06 | 12 | 18 | 24 |
| **Conveyor Roller Width (W)** | 152 mm (6 in) | 305 mm (12 in) | 457 mm (18 in) | 610 mm (24 in) |
| **Conveyor Length Reference** | 0200 | 0050 increments **up to...** | | 1200 |
| **Conveyor Length (L)** | 610 mm (2 ft) | 152 mm (6 in) increments **up to...** | | 3,658 mm (12 ft) |
| **Roller Center Reference** | 12 | 24 | | 36 |
| **Roller Centers** | 31 mm (1.2 in) | 61 mm (2.4 in) | | 91 mm (3.6 in) |

**W** = Conveyor Belt Width **Dim** = mm (in)

## Fixed Height Supports Stands

| Fixed Foot Model | | | |
|---|---|---|---|
| Stand Width (WW) | 305 mm (12 in) | 51 mm (2 in) increments **up to...** | 1,219 mm (48 in) |
| Part # Reference | 12 | in 02 increments **up to...** | 48 |
| Stand Height (HH)* Belt | 381 - 483 mm (15 - 19 in) | in 25 mm (1 in) increments **up to...** | 2,413 - 2,515 mm (95 - 99 in) |
| Part # Reference Belt | 1519 | in 0101 increments **up to...** | 9599 |

| Swivel Locking Caster Model | | | |
|---|---|---|---|
| Stand Width (WW) | 305 mm (12 in) | 51 mm (2 in) increments **up to...** | 1,219 mm (48 in) |
| Part # Reference | 12 | in 02 increments **up to...** | 48 |
| Stand Height (HH)* Belt | 508 - 610 mm (20 - 24 in) | in 25 mm (1 in) increments **up to...** | 1,727 - 1,829 mm (68 - 72 in) |
| Part # Reference Belt | 2024 | in 0101 increments **up to...** | 6872 |

- 102 mm (4 in) Height Adjustment
- Provides most access to outside T-Slots
- Includes height indicator

* Dependent on stand width, stands over 1,067 mm (42 in) may include outriggers (see page 81)

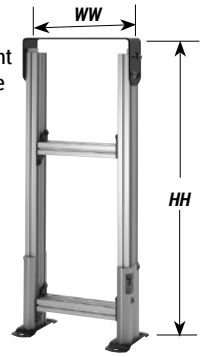


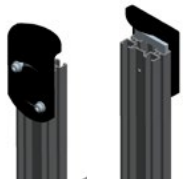

For both the Fixed and Adjustable height stands, width's 305 mm (12 in) and below have a full width plate. For widths larger than 305 mm (12 in) have split brackets.

## Adjustable Height Supports Stands

| Fixed Foot Model | | | | | | | | | | | |
|---|---|---|---|---|---|---|---|---|---|---|---|
| Stand Width (WW) | 305 mm (12 in) | | | 51 mm (2 in) increments **up to...** | | | | | | 1,219 mm (48 in) | |
| Part # Reference | 12 | | | in 02 increments **up to...** | | | | | | 48 | |
| Stand Height (HH) Belt | 12" - 13" (305-330mm) | 13" - 15" (330-381mm) | 14" - 17" (356-432mm) | 16" - 21" (406-660mm) | 19" - 26" (483-686mm) | 24" - 36" (610-914mm) | 30" - 48" (762-1,219mm) | 42" - 60"* (1,067-1,524mm) | 54" - 72"* (1,372-1,829mm) | 66" - 84"* (1,676-2,134mm) | 78" - 96"* (1,981-2,438mm) |
| Part # Reference Belt | 1213 | 1315 | 1417 | 1621 | 1926 | 2436 | 3048 | 4260 | 5472 | 6684 | 7896 |

| Swivel Locking Caster Model | | | | | | | | | |
|---|---|---|---|---|---|---|---|---|---|
| Stand Width (WW) | 305 mm (12 in) | | | 51 mm (2 in) increments **up to...** | | | 1,219 mm (48 in) | | |
| Part # Reference | 12 | | | in 02 increments **up to...** | | | 48 | | |
| Stand Height (HH) Belt | 432-457 mm (17 - 18 in) | 457-508 mm (18 - 20 in) | 483-559 mm (19 - 22 in) | 533-660 mm (21 - 26 in) | 610-787 mm (24 - 31 in) | 737-1,041 mm (29 - 41 in) | 762-1,346 mm (35 - 53 in) | 1,194-1,651 mm (47 - 65 in)* | 1,499-1,956 mm (59 - 77)* |
| Part # Reference Belt | 1718 | 1820 | 1922 | 2126 | 2431 | 2941 | 3553 | 4765 | 5977 |

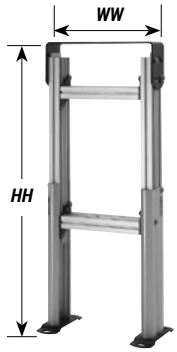


- Up to 457 mm (18 in) height adjustment range
- Includes height indicator

* Dependent on stand width, stands over 1,067 mm (42 in) may include outriggers (see page 81)

## Short Support Stands

| Fixed Foot Model | | | |
|---|---|---|---|
| Stand Width (WW) | 305 mm (12 in) | 51 mm (2 in) increments **up to...** | 1,219 mm (48 in) |
| Part # Reference | 12 | in 02 increments **up to...** | 48 |
| Stand Height (HH)* Belt | 152 - 203 mm (06 - 08 in) | in 25 mm (1 in) increments **up to...** | 305 - 356 mm (12 - 14 in) |
| Part # Reference Belt | 0608 | in 0101 increments **up to...** | 1214 |
| **Swivel Locking Caster Model** | | | |
| Stand Width (WW) | 305 mm (12 in) | 51 mm (2 in) increments **up to...** | 1,219 mm (48 in) |
| Part # Reference | 12 | in 02 increments **up to...** | 48 |
| Stand Height (HH)* Belt | 279 - 330 mm (11 - 13 in) | in 25 mm (1 in) increments **up to...** | 305 - 483 mm (17 - 19 in) |
| Part # Reference Belt | 1113 | in 0101 increments **up to...** | 1719 |

- For top belt heights below 508 mm (20 in)
- Full width is top plate on 305 mm (12 in) wide stands only

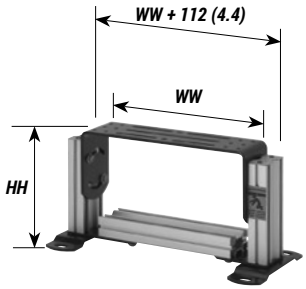


**Note:** Due to the wide variety of conveyor and stand options along with possible configurations, stability of the final setup is the responsibility of the end user.

For ordering information, see page 91

## Fully Adjustable Support Stands

| Fixed Foot Model | | | | | | | |
|---|---|---|---|---|---|---|---|
| Stand Width (WW) | 44 mm (1.75 in) | 70 mm (2.75 in) | 95 mm (3.75 in) | 127 mm (5 in) | 152 mm (6 in) | 51 mm (2 in) increments **up to...** | 1,219 mm (48 in) |
| Part # Reference | 02 | 03 | 04 | 05 | 06 | in 02 increments **up to...** | 48 |
| Top of Belt Range | 179 - 483 mm (7 - 19 in) | | 305 - 787 mm (12 - 31 in) | | 305 - 1,097 mm (12 - 43 in) | 305 - 1,397 mm (12 - 55 in) | 305 - 1,702 mm (12 - 67 in) |
| Stand Height Reference | 0719 | | 1231 | | 1243 | 1255 | 1267 |
| **Swivel Locking Caster Model** | | | | | | | |
| Stand Width (WW) | 44 mm (1.75 in) | 70 mm (2.75 in) | 3.75" (95 mm) | 127 mm (5 in) | 152 mm (6 in) | 51 mm (2 in) increments **up to...** | 1,219 mm (48 in) |
| Part # Reference | 02 | 03 | 04 | 05 | 06 | in 02 increments **up to...** | 48 |
| Top of Belt Range | 305 - 483 mm (12 - 19 in) | | 432 - 787 mm (17 - 31 in) | | 432 - 1,097 mm (17 - 43 in) | 432 - 1,397 mm (17 - 55 in) | 432 - 1,702 mm (17 - 67 in) |
| Stand Height Reference | 1219 | | 1731 | | 1743 | 1755 | 1767 |

- Provides maximum height adjustment range
- Conveyor is located between stand legs

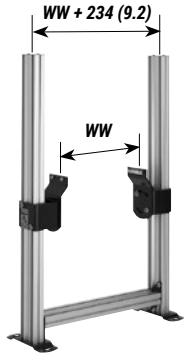


## Quick Adjust Stands

| Fixed Foot Model | | | |
|---|---|---|---|
| Stand Width (WW)* | 305 mm (12 in) | 5 1mm (2 in) increments **up to...** | 914 mm (36 in) |
| Part # Reference | 12 | in 02 increments **up to...** | 36 |
| Stand Height (HH)* Belt | 610 - 762 mm (24 - 30 in) | in 25 mm (1 in) increments **up to...** | 1,676 - 1,829 mm (66 - 72 in) |
| Part # Reference Belt | 2430 | in 0101 increments **up to...** | 6672 |
| **Swivel Locking Caster Model** | | | |
| Stand Width (WW)* | 305 mm (12 in) | 5 1mm (2 in) increments **up to...** | 914 mm (36 in) |
| Part # Reference | 12 | in 02 increments **up to...** | 36 |
| Stand Height (HH)* Belt | 686 - 838 mm (27 - 33 in) | in 25 mm (1 in) increments **up to...** | 1,524 - 1,676 mm (60 - 66 in) |
| Part # Reference Belt | 2733 | in 0101 increments **up to...** | 6066 |

* Under 305 mm (12 in) wide use full top plate option

- Metric fasteners
- +/- 76 mm (3 in) Height Adjustment
- Allows for Quick Height Adjustment
- Tool-less lock and adjustment handles

Fixed Foot Model

Swivel Locking Caster Model

**2200 & 2700 Series Support Stands**

3 9 M T T W W - HH(min) HH (max) F

- **Feet or Casters:** **F** = fixed foot pad **C** = total lock swivel caster
- **Height Reference**
- **Width Reference**
- **Stand Type:**
  - **LH** = short stand **FH** = fixed height **FA** = fully adjustable
  - **FT** = tall fixed* **AT** = tall adjustable*
  - **QA** = quick adjust **AH** = adjustable height
- **Documentation Language:** **M** = US

**EXAMPLE:** 39MAH12-2126CP

**Note:** Due to the wide variety of conveyor and stand options along with possible configurations, stability is final setup of the responsibility of the end user.
*Tall stands are required when the stand width is 3.5 times the stand height.

**Note:** Due to the wide variety of conveyor and stand options along with possible configurations, stability of the final setup is the responsibility of the end user.

## Support Post Stands

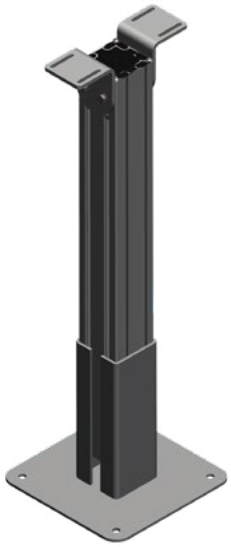

### Specifications

- ± 51 mm (2 in) height adjustment
- Compatible with 51 - 305 mm (2 – 12 in) wide conveyors
- Top of Belt Heights:
  - Minimum = 508 mm (20 in)
  - Maximum = 2,464 mm (97 in)
  - Available in 25 mm (1 in) height increments
- Mounting Configurations:
  - ± 30° angle mount
- Equipped with a steel base plate for floor mounting
- Stand must be lagged to the floor

**2200 Series: Support Post - Beam Type**

3 2 0 R P M W W - L H U H

- **Tallest Height to Top of Bracket** (in inches)
- **Lowest Height to Top of Bracket** (in inches)
- **Width Reference**
- **Documentation Language: M** = US
- **Width Range: 3** = 51 - 127 mm (2 - 5 in), **4** = 152 - 203 mm (6 - 8 in), **5** = 254 - 304 mm (10 - 12 in)

## Cantilever Stand Mount (Belted Conveyor Only)

Easy Access for Quick Belt Removal

### Specifications

- Widths: 51 mm (2 in) to 610 mm (24 in) available in 25 mm (1 in) increments
- Conveyors up to 152 mm (6 in) wide are supported with a single cantilever bracket only
- Conveyors 203 mm (8 in) and wider include a pivoting outboard support post
- Mounts the conveyor from one side only for quick maintenance of the conveyor belt
- Compatible with the 2200 and 3200 Series Conveyors
- (2) Models
  - Table Top Bracket
  - Support Stand Mount Bracket

**2200 Series Cantilever Stand Mount**

3 9 M C B W W - T

- **Mount Type: T** = Table Top Mount **S** = Support Stand Mount
- **Belt Width: 02** to **24**

152 mm (6 in) and narrower

203 mm (8 in) and wider

**Note:** Due to the wide variety of conveyor and stand options along with possible configurations, stability of the final setup is the responsibility of the end user.

## Quantity Charts

| Support Stands | |
|---|---|
| Conveyor Length | Number of Supports |
| 610 - 2743 mm (2 - 9 ft) | 2 |
| 2744 - 5486 mm(9.01 - 18 ft) | 3 |
| 5487 - 8230 mm (18.01 - 27 ft) | 4 |
| 8231 - 9144 mm (27.01 - 30 ft) | 5 |

**Required Return Roller Quantity Chart**

| Maximum Distance Between Rollers mm (in) | | | | | | | | | | | | | | | | | | | | |
|---|---|---|---|---|---|---|---|---|---|---|---|---|---|---|---|---|---|---|---|---|
| Conveyor Width mm (in) | 44 (1.75) | 70 (2.75) | 95 (3.75) | 127 (5) | 152 (6) | 203 (8) | 254 (10) | 305 (12) | 356 (14) | 406 (16) | 457 (18) | 508 (20) | 559 (22) | 610 (24) | 660 (26) | 711 (28) | 762 (30) | 813 (32) | 864 (34) | 914 (36) |
| Flat Belt | 2667 (105) | 2667 (105) | 2286 (90) | 2286 (90) | 2134 (84) | 2057 (81) | 1829 (72) | 1829 (72) | 1829 (72) | 1829 (72) | 1676 (66) | 1676 (66) | 1676 (66) | 1372 (54) | 1372 (54) | 1219 (48) | 1219 (48) | 1219 (48) | 1219 (48) | 1219 (48) |
| Cleated Belt | 1753 (69) | 1753 (69) | 1600 (63) | 1600 (63) | 1448 (57) | 1372 (54) | 1219 (48) | 1219 (48) | 1219 (48) | 1219 (48) | 1067 (42) | 1067 (42) | 1067 (42) | 914 (36) | n/a | n/a | n/a | n/a | n/a | n/a |

Quantity of return rollers required = whole number result of:

$$\frac{\text{conveyor length in mm}}{\text{max distance between return rollers in mm}}$$

**Example:** 2200 flat belt 203 mm wide x 4267 mm long $\frac{4267\text{ m}}{2057}$=2.07 **2 return rollers required**

**Example:** 2200 flat belt 8 in wide x 14 ft long $\frac{14\text{ ft}}{6.75}$ =2.07 **2 return rollers required**

## Mounting Brackets

### Cleated Belt Stand Mounting Bracket

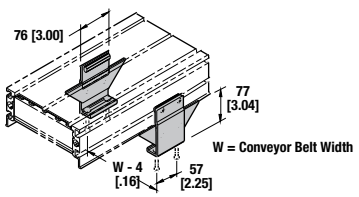


| Part Number | Description |
|---|---|
| 240838 | Cleated Belt Conveyor |

### Flat Belt & Modular Belt Stand Mounting Bracket

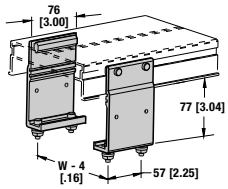


| Part Number | Description |
|---|---|
| 240839 | Belted Conveyor 2200 |
| 202389 | Modular Belt Conveyor |
| 208427 | Belted Conveyor 2700 |
| 208449 | Belted Conveyor 2700 (head plate mount) |

**Note:** Conveyors can be ordered with the required number of mounting brackets. If desired, order additional mounting brackets separately.

**Dim = mm** (in)

**Note:** Due to the wide variety of conveyor and stand options along with possible configurations, stability of the final setup is the responsibility of the end user.

## Return Rollers (Belted Conveyors Only)

### Cleated Belt Return Roller

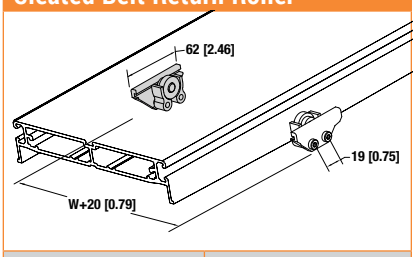


| Part Number | Description |
|---|---|
| 206521 | Return Roller for Cleated Belt Conveyors |

### Flat Belt Return Roller for 44 to 152 mm (2 to 6 in) Wide Conveyors

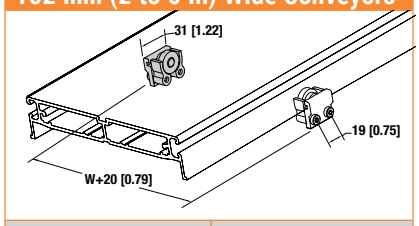


| Part Number | Description |
|---|---|
| 206522 | Return Roller for 44 mm - 152 mm (2 - 6 in) wide Flat Belt Conveyors |

### Flat Belt Return Roller for 203 to 1,219 mm (8 to 48 in) Wide Conveyors

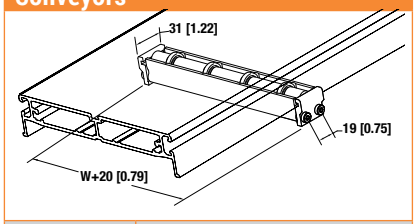


| Part Number | Description |
|---|---|
| 206523-WW | Return Roller for 203 - 1,219 mm (8 - 48 in) wide Flat Belt Conveyors |

## Stand Accessories

### Adjustable Tie Bracket

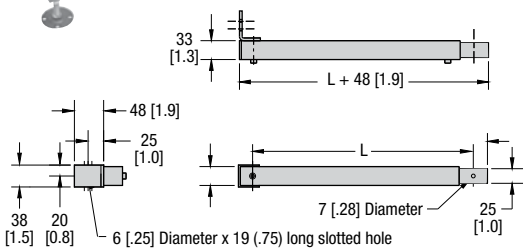


- Compatible with steel and aluminum support stands
- Secure critical stand and conveyor locations
- Length (L) adjusts + 0, - 286 mm (11.25 in)
- Includes metric mounting hardware

| Part Number | Description |
|---|---|
| 27M400-02 | Adjustable Tie Bracket, 610 mm (2 ft) |
| 27M400-03 | Adjustable Tie Bracket, 914 mm (3 ft) |
| 27M400-04 | Adjustable Tie Bracket, 1,219 mm (4 ft) |
| 27M400-05 | Adjustable Tie Bracket, 1,524 mm (5 ft) |
| 27M400-06 | Adjustable Tie Bracket, 1,829 mm (6 ft) |

### Diagonal Bracing

- For use on steel, aluminum and single post support stands with casters
- Metric fastener mounting hardware included
- For use on all stands with casters and any stands over 1829 mm (72 in) tall
- One brace per stand for conveyors up to 610 mm (24 in) wide
- Two braces per stand for conveyors over 610 mm (24 in) wide

| Part Number | Description |
|---|---|
| 39MB-TS | for two-legged H style stands up to 762 mm (30 in) tall |
| 39MB-TT | for two-legged H style stands over 762 mm (30 in) tall |

**Note:** Due to the wide variety of conveyor and stand options along with possible configurations, stability of the final setup is the responsibility of the end user.

**Dim** = mm (in)

## Stand Accessories

### Common Mount Kit

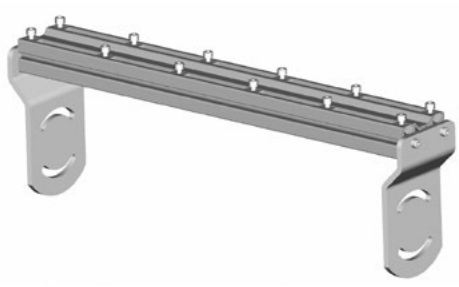

- Stand accessory for mounting multiple conveyors in parallel to one stand
- Adds 40 mm (1.58 in) to stand height
- Adds 71 mm (2.79 in) to overall stand width

**2200 Series: Common Mount Kit**

39MCM WW - #

- Number of Conveyors
- Width Stand

**Example:** 39MCM24-4

### Tall Support Stand Outriggers

**Outriggers**

Tall Stands are the Fixed Height and Adjustable Height Stands as shown with additional outrigger support for added stability. These outriggers are required when the height of the stand exceeds 3.5x its width, and they add 406 mm (16 in) to stand width. Tall stands over 1829 mm (6 ft) tall include diagonal bracing.

### Fine Adjustment Kit

- Provides fine height adjustment via a threaded bolt
- For use with Fixed Height Stands

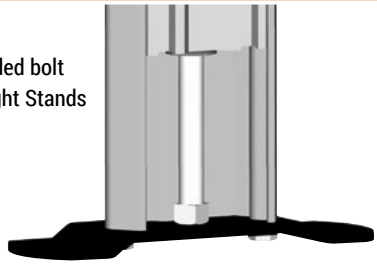

| Part Number | 710028 |
|---|---|

### Bottom Mount Stand Bracket (2200 only)

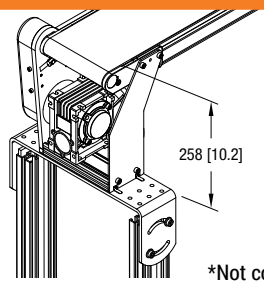


*Not compatible with Modular Belt Conveyors

- Bolts to 90˚ standard load gearmotor
- Includes metric mounting hardware
- Provides a 258 mm (10.2 in) T.O.B. Height

| Part Number | Description |
|---|---|
| 202306-02 | "L" Bracket only for 51 -127 mm (2 - 5 in) wide conveyors |
| 202306-WW | Bracket Assembly, 06 and wider 2200 conveyors |

**Dim** = mm (in)

## Adjustable Lane Guiding (2200 Belted Conveyors only)

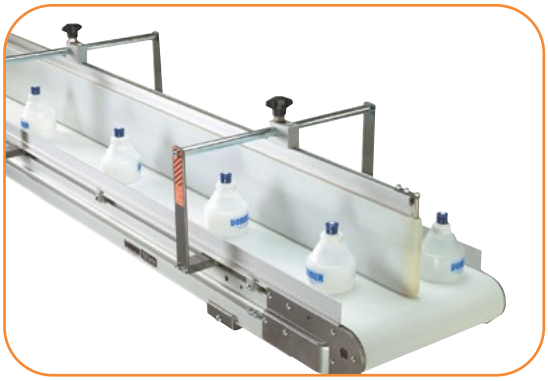

### Specifications

- UHMW guide surface on an anodized aluminum mounting rail
- Painted Steel mounting hardware
- Available in standard 305 mm (1 ft) increments or can be ordered to any length
- 127 mm (5 in) maximum, 7 mm (0.25 in) minimum part height
- 6 mm (0.25 in) minimum lane width
- Package includes one lane guide, mounting hardware and adjusting knobs
- For conveyors up to 610 mm (24 in) wide – Consult factory for wider lane guide availability
- Compatible with standard Dorner bolt-on profiles
- Easily adjusts for quick product change over
- Attach additional guides to create multiple lanes
- Create lanes, plows, merges and transfers
- Order additional lane kits separately

**2200 Series Adjustable Lane Guiding**

27M GGG - WW LL

- **Conveyor Length Reference**
- **Conveyor Width Reference**
- **Guide Type:**
  - **500** = 2200 Package (Belted)
  - **502** = Additional Lane Guide

**Example:** 27M500-0620

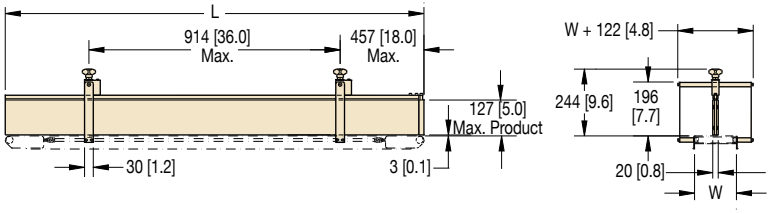


**Important:** Exceeding 127 mm (5 in) product height will produce a pinch point.

## Side Tables

### Specifications

- Provides a 152 mm (6 in) or 305 mm (12 in) wide working surface
- Adjusts in/out and up/down (7 mm [0.25 in] max above bedplate) for product transfer on/off conveyor belts
- Can be positioned anywhere along the conveyor
- Anodized aluminum work surface
- Max load: 6 kg/m (5 lbs/ft), use Adjustable Tie Brackets for added capacity
- Available in 305 mm (1 ft) increments from 305 mm (1 ft) to 30,175 mm (99 ft)

**2200 Series Side Tables**

27M TTT - 06 LLLL

- **Table Length**
  - ex. 0200 = 610 mm (2 ft)
- **Table Width:**
  - **06** = 152 mm (6 in)
  - **12** = 610 mm (12 in)
- **Conveyor / Table Type:**
  - **601** = one side
  - **602** = two sides

**Example:** 27M601-060200

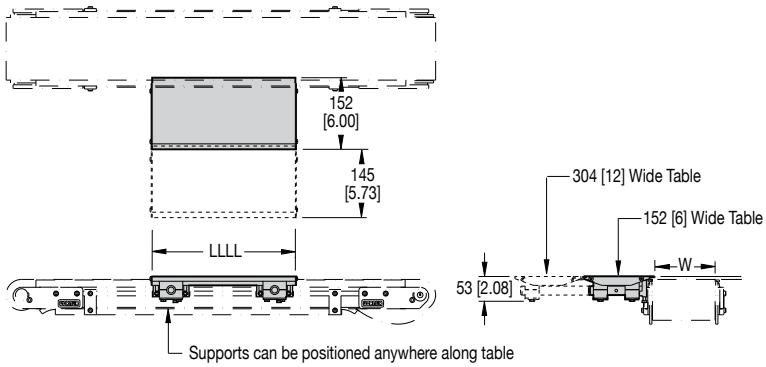


LLLL = 305 to 30,175 mm (1 to 99 ft); Maximum 2,438 mm (8 ft) length single piece

**Dim = mm** (in)

## 90° Adjustable Transfer (2200 Belted Conveyor Only)

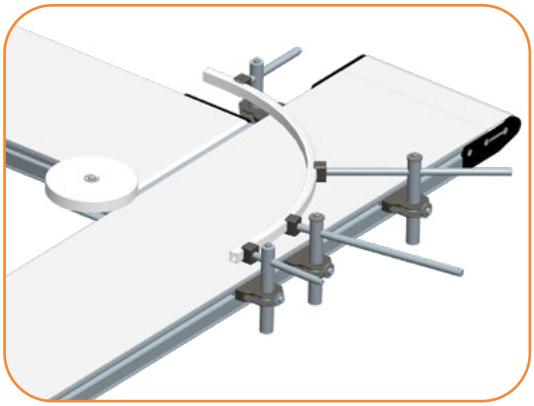

### Specifications

- For conveyors up to 305 mm (12 in) wide
- Requires low side conveyors
- 6 mm (0.25 in) minimum part thickness
- Hard coat anodized transfer plate
- Painted steel mounting hardware
- 1,219 mm (48 in) long UHMW outside turn guide, customer can trim to fit
- Maximum recommended part weight is 9 kg (20 lbs) at 15 m/min (50 ft/min) belt speed – Consult factory regarding applications for higher product weights or faster belt speeds.
- 22 mm (0.88 in) minimum product size for 2200 Series
- Package includes outside turn guide, guide wheel, adjustable mounting hardware and extruded aluminum transfer plate
- Pre-engineered guided turns adjust to a variety of products
- Accepts standard Dorner bolt-on profiles outside of transfer area
- Place adjusting rods where required
- Easily adjusts for quick product change-over

| Part Number | Description |
|---|---|
| 206524-WW* | 2200 Series 90° Adjustable Transfer |

*WW = Width in inches

**Note:** Due to the wide variety of drive setups and applications point of installation guarding is the responsibility of the end user.

**Important:** Do not use with 03, 08, 55, 62, or 64 High Friction Belts on Infeed conveyor

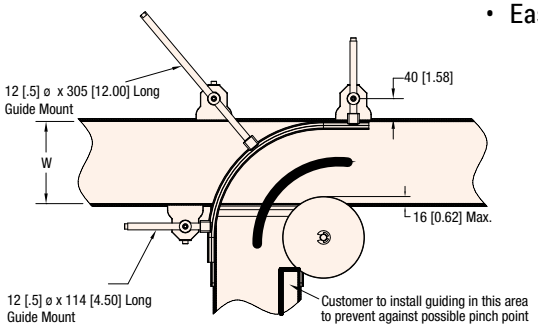


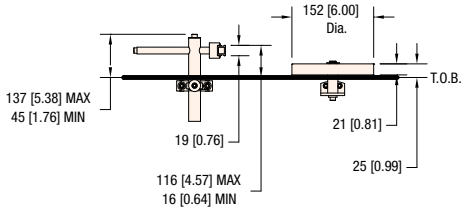


## Pulley Transfer Plate (2200 Belted Conveyor Only)

### Specifications

- 22 mm (0.88 in) diameter minimum product transfer
- 300 series stainless steel transfer plate

| Part Number | Description |
|---|---|
| 207218-WW | 2200 Series Pulley Transfer Plate |

**WW** = Conveyor Width Reference

Not compatible with clipper splice or high friction belts
Not compatible with cleated belt conveyors

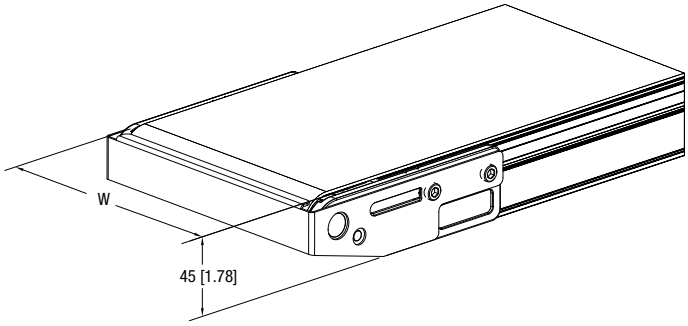


**Dim = mm** (in)

## T-Slot Hardware Accessories

### Spring T-Nut

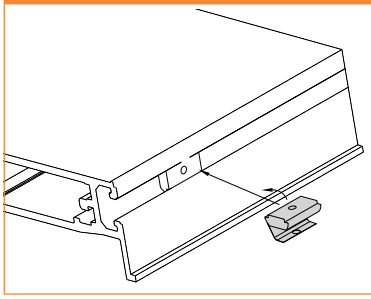

- Retains position in T-slot

| Part Number | Description |
|---|---|
| 205504 | M4 x 0.7 Spring Nut |
| 205505 | M5 x 0.8 Spring Nut |
| 205506 | M6 x 1.0 Spring Nut |
| 205508 | M8 x 1.25 Spring Nut |
| 207443 | 1/4 x 20 Spring Nut |

### T-Bars

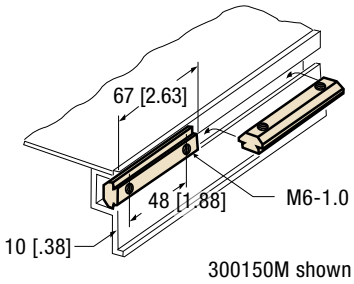


- Mounts in T-slots to attach heavy accessories

| Part Number | Description |
|---|---|
| 639971M | M6 x 1.0, T-bar, 1 hole, 19 mm (0.75 in) long |
| 202390M | M8 x 1.25, T-bar, 1 hole, 16 mm (0.63 in) long |
| 643874M | M6 x 1.0, T-bar, 2 hole, 19 mm (0.75 in) centers, 38 mm (1.5 in) long |
| 200626M | M6 x 1.0, T-bar, 2 hole, 22 mm (0.875 in) centers, 41 mm (1.62 in) long |
| 200830M | M6 x 1.0, T-bar, 2 hole, 25 mm (1.0 in) centers, 44 mm (1.75 in) long |
| 639717M | M6 x 1.0, T-bar, 2 hole, 32 mm (1.25 in) centers, 51 mm (2 in) long |
| 300150M | M6 x 1.0, T-bar, 2 hole, 48 mm (1.875 in) centers, 2.52" long |
| 300536M | M6 x 1.0, T-bar, 2 hole, 54 mm (2.125 in) centers, 73 mm (.88 in) long |
| 639971 | 1/4 x 20, T-bar, 1 hole, 19 mm (0.75 in) long |
| 300150 | 1/4 x 20, T-bar, 2 hole, 48 mm (1.875 in) centers, 67 mm (2.62 in) long |

### T-Bolts & T-Nuts

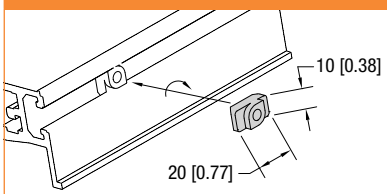


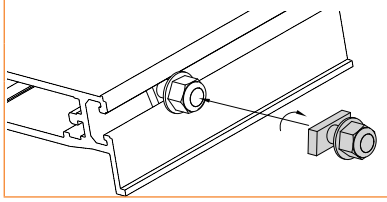

- Mounts in T-slots to attach accessories
- 1/2 turn install and remove
- T-nut requires thread lock screw

| Part Number | Description |
|---|---|
| 203446 | M8 x 20mm long Twist Bolt and Nut, Package of 5 |
| 203447 | M8 x 35mm long Twist Bolt and Nut, Package of 5 |
| 206685 | M6 Twist T-Nut |

### T-Slot Extenders

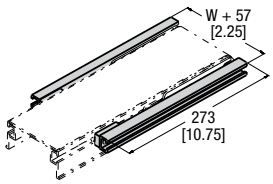


- Provides additional T-slots to the end of conveyor
- Includes mounting brackets and hardware
- Metric fasteners

| Part Number | Description |
|---|---|
| 307000M | T-Slot Extender, Pair |

### T-Slot Cover

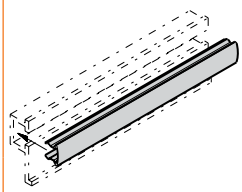

- Snaps into conveyor and aluminum stand T-slots
- Black plastic extrusion
- Can be trimmed to fit

| Part Number | Description |
|---|---|
| 645656P | T-Slot Cover, Per 1' (305 mm) of length |

**Dim = mm** (in)

*Due to the wide variety of drive set ups and applications, point of installation guarding is the responsibility of the end user.*

## Side Guides (2200 Belted Conveyor Only)

### Flared Side Guide

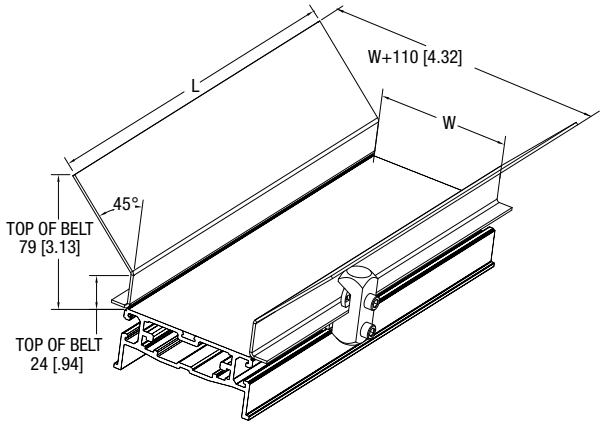


- Guides parts onto conveyor belt surface
- Includes metric mounting hardware

| Part Number | Description |
|---|---|
| 280802M | 610 mm (2 ft) Flared Side |
| 280803M | 914 mm (3 ft) Flared Side |
| 280804M | 1,219 mm (4 ft) Flared Side |
| 280805M | 1,524 mm (5 ft) Flared Side |
| 280806M | 1,829 mm (6 ft) Flared Side |

## Stops

### Adjustable Stop*

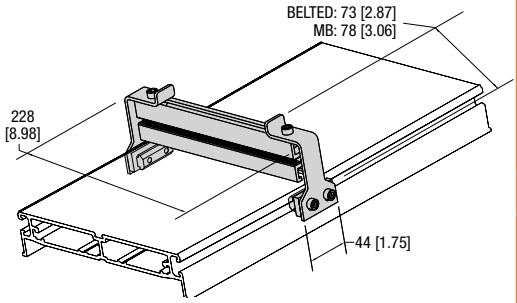


- Slides up and down T-slot length
- Includes metric mounting hardware

| Part Number | Description |
|---|---|
| 207133-WW | Adjustable Stop: Belted |
| 207137-WW | Adjustable Stop: Modular Belt and Precision Move |

**WW** = Conveyor Width Reference

* Not compatible with high friction belts

* Not compatible with cleated belt conveyors

### End Stop* (2200 only)

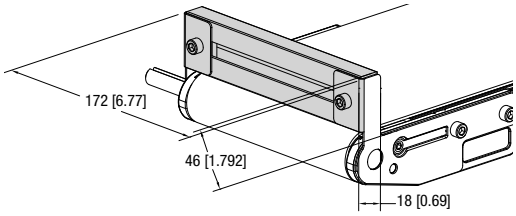


- Anodized aluminum stop
- Includes tail plates and mounting hardware

| Part Number | Description |
|---|---|
| 207213-WW | End Stop: Belted |
| 207214-WW | End Stop: Precision Move |
| 207215-WW | End Stop: Modular Belt |

**Note:** Not compatable with gang drive, nosebar, cleated belt, or modular belt center drive options

### Roller Conveyor End Stop

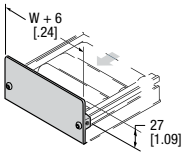


- Includes metric mounting hardware

| Part Number | Description |
|---|---|
| 202668-WW | Roller End Stop |

**Dim = mm** (in)

*Due to the wide variety of drive set ups and applications, point of installation guarding is the responsibility of the end user.*

## Brackets

### Adjustable Height Bracket ‡

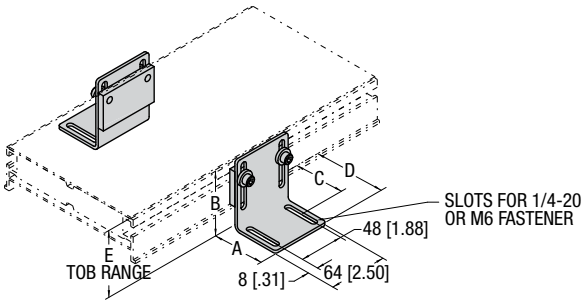


- Provides height adjustment
- (2) Height Ranges
- Includes mounting hardware

| Part Number | Description | A | B | C | D | E |
|---|---|---|---|---|---|---|
| 201557 | 51 x 76 mm (2 x 3 in) Bracket | 51 (2) | 76 (3) | 36 (1.4) | 61 (2.4) | 97 to 135 (3.83 to 5.33) |
| 201558 | 76 x 127 mm (3 x 5 in) Bracket | 76 (3) | 127 (5) | 51 (2) | 86 (3.4) | 133 to 184 (5.23 to 7.23) |

### Table Top Mounting Bracket ‡

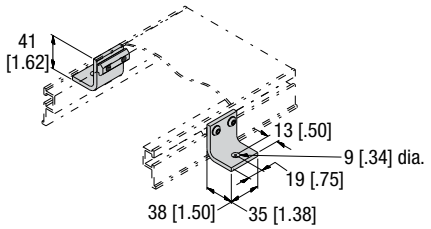


- Includes metric mounting hardware

| Part Number | Description |
|---|---|
| 200349M | Table top bracket |

‡ = If the discharge end of conveyor is mounted over a table or similar structure, the customer must provide guiding to prevent against possible pinch point.

### Frame Mount Casters (2200 Belted Conveyor Only)

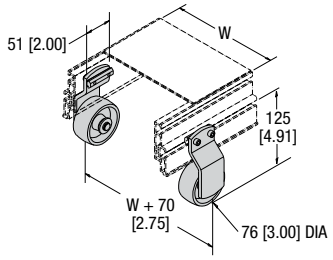


- Includes metric mounting hardware

*Provides floor to T-Slot height of: 125mm (4.94 in)

| Part Number | Description |
|---|---|
| 390207 | Frame mount casters, pair |

### Floor Mount Brackets

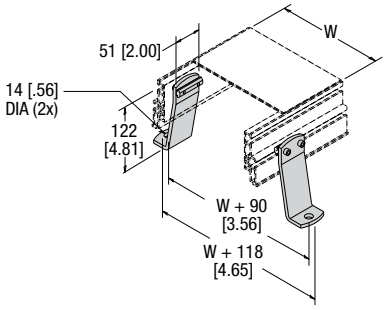


- Includes metric mounting hardware

*Provides floor to T-Slot height of: 122mm (4.81 in)

| Part Number | Description |
|---|---|
| 390217 | Floor mount brackets, pair |

**WW** = Conveyor Width Reference

**Dim = mm** (in)

*Due to the wide variety of drive set ups and applications, point of installation guarding is the responsibility of the end user.*

## Drive Shaft Accessories

### Clear Cover

• Fits 2200 light load top mount and standard and heavy load top and bottom mount packages

| Part Number | Description |
|---|---|
| 689499M | Clear cover, ordered separately |

### Spline Shaft

• Compatible with Precision Move Gang Mid Drive

| Part Number | Description |
|---|---|
| 202432-04800 | 13 mm (½ in) diameter x 16 tooth x 1219 mm (4 ft) long Spline Shaft |

### Flexible Coupling

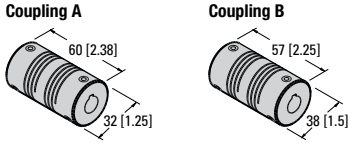


• (A) Includes SAE set screws, (B) metric set screws

| Part Number | Description | Coupling |
|---|---|---|
| 23M29 | Flexible Coupling, 12 mm bore x 10 mm (0.38 in) hex | A |
| 23M31 | Flexible Coupling, 12 mm bore x 12 mm bore | B |

**Dim = mm** (in)

*Due to the wide variety of drive set ups and applications, point of installation guarding is the responsibility of the end user.*

## Guide Mounts

### Guide Mount Brackets for Adjustable Profiles

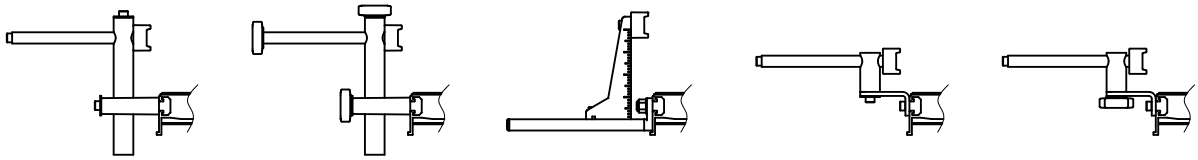

Profile 13 | Profile 14 | Profile 16 | Profile 19 | Profile 20

| Part Number | Description |
|---|---|
| 206686 | Fully adjustable guide mount assembly (Profiles 13, 33 & 43) |
| 206687 | Tool-less Fully adjustable guide mount assembly (Profiles 14, 34 - 44) |
| 206193 | Outboard guide mount assembly (Profiles 16, 36 & 46) |
| 207150 | Belted horizontal only guide mount assembly (Profiles 19, 39 & 49) |
| 207151 | Belted tool-less horizontal only guide mount assembly (Profiles 20, 40 & 50) |

**Note**: Order guide extrusion separately

### Overhead Guide Mounting Bracket

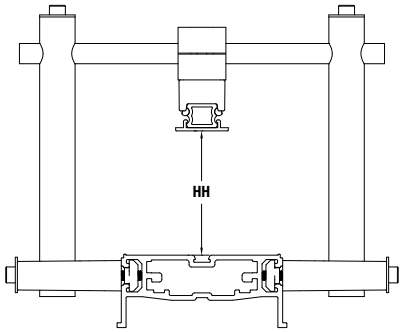


| Part Number | Description |
|---|---|
| 206185-WW-03 | Adjustable 0-76 mm (3 in) Overhead Guide Mount Bracket |
| 206185-WW-05 | Adjustable 0-127 (5 in) Overhead Guide Mount Bracket |
| 206185-WW-08 | Adjustable 0-203 mm (8 in) Overhead Guide Mount Bracket |

**Note**: Order guide extrusion separately

### Dual Guide Mounting Bracket

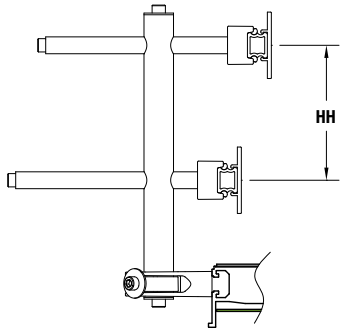


| Part Number | Description |
|---|---|
| 206186-02 | Dual Guide Bracket, 50 mm (2 in) Between Guides |
| 206186-03 | Dual Guide Bracket, 76 mm (3 in) Between Guides |
| 206186-04 | Dual Guide Bracket, 102 mm (4 in) Between Guides |

**Note**: Order guide extrusion separately

### Adjustable Guide Rail Extrusion

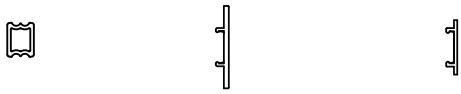

**Aluminum Extrusion** | **50 mm [2 in] HDPE Extrusion** | **33 mm [1.3 in] HDPE Extrusion**

| Part Number | Description |
|---|---|
| GTB13A04 | Adjustable guide aluminum extrusion, 1219 mm (4 ft) long |
| GTB13A08 | Adjustable guide aluminum extrusion, 2438 mm (8 ft) long |
| GTB13B04 | Adjustable guide 33 mm (1.3 in) HDPE Cover, 1219 mm (4 ft) long |
| GTB13B08 | Adjustable guide 33 mm (1.3 in) HDPE Cover, 2438 mm (8 ft) long |
| GTB13C04 | Adjustable guide 50 mm (2 in) HDPE Cover, 1219 mm (4 ft) long |
| GTB13C08 | Adjustable guide 50 mm (2 in) HDPE Cover, 2438 mm (8 ft) long |
| GTB13P04 | Adjustable guide HDPE extrusion, 1219 mm (4 ft) long |
| GTB13P08 | Adjustable guide HDPE extrusion, 2438 mm (8 ft) long |

**Note**: Order guide mount brackets separately

## Guide Mounts (continued)

### Adjustable Guide Rail Accessories

834-242

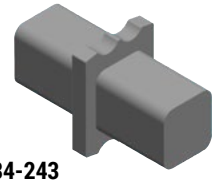
834-243

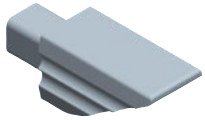
834-244

834-245

| Part Number | Description |
|---|---|
| 834-242 | End cap for aluminum guide extrusion, 10 pack |
| 834-243 | Plastic plug connecting piece for aluminum guide extrusion, 10 pack |
| 834-244 | Lead in for aluminum guide extrusions, 10 pack |
| 834-245 | Aluminum connection piece for aluminum guide extrusion, 10 pack |

**Note**: Order guide extrusion separately

### Bolt on Guide Clip Assembly

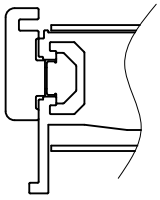

| Part Number | Description |
|---|---|
| 203661 | For use with all High Side Guide Profiles |

**Note**: Order guide extrusion separately

### High Side Guide Rails

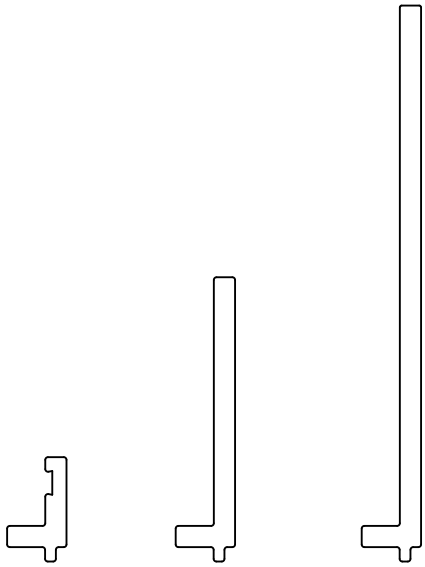


| Part Number | Description |
|---|---|
| GTB09A04 | 13 mm (0.5 in) Aluminum High Side guide extrusion 1219 mm (4 ft) long |
| GTB09A08 | 13 mm (0.5 in) Aluminum High Side guide extrusion 2438 mm (8 ft) long |
| GTB05A04 | 38 mm (1.5 in) Aluminum High Side guide extrusion 1219 mm (4 ft) long |
| GTB05A08 | 38 mm (1.5 in) Aluminum High Side guide extrusion 2438 mm (8 ft) long |
| GTB04A04 | 76 mm (3.0 in) Aluminum High Side guide extrusion 1219 mm (4 ft) long |
| GTB04A08 | 76 mm (3.0 in) Aluminum High Side guide extrusion 2438 mm (8 ft) long |

## Regulatory Approvals:

**Conveyors:**

All Dorner 2200 Series standard conveyors (not including gearmotors and controllers) are CE approved. CE approval follows the provisions of the following directives; Machine Directive 2006/42/EC, EU Low Voltage Directive 2006/95/EC, and EMC Directive 2004/108/EC. All conveyors are marked with the CE symbol on the Dorner serial number tag located on the conveyor frame. Contact the factory for the CE Declaration of Conformity.

All Dorner 2200 Series standard conveyors (not including gearmotors and controllers) are designed and manufactured in accordance with the restrictions defined in the "Restriction of Hazardous Substances" directive, citation 2002/95/EC, commonly known as RoHS. All conveyors are marked with the RoHS symbols on the Dorner serial number tag located on the conveyor frame.

**Gearmotors and Controllers:**

All Dorner 2200 Series gearmotors and controllers carry one or more of the following approvals. Products are not covered by each approval. Please see the appropriate part number on the Gearmotor and controller charts located in this manual. In addition, regulatory symbols are located on the product information tags located on the product.

| | |
|---|---|
| CE | CE Marking on a product is a manufacturer's declaration that the product complies with the essential requirements of the relevant European health, safety and environmental protection legislation, in practice by the Product Directives. CE Marking on a product ensures the free movement of the product within the European Union (EU). |
| RoHS | This directive restricts (with exceptions) the use of six hazardous materials in the manufacture of various types of electronic and electrical equipment. It is closely linked with the Waste Electrical and Electronic Equipment Directive (WEEE) 2002/96/EC which sets collection, recycling and recovery targets for electrical goods and is part of a legislative initiative to solve the problem of huge amounts of toxic e-waste. |
| | The UL Recognized Component mark is for products intended to be installed in another device, system or end product. This Recognized Component Mark is for the United States only. When a complete product or system containing UL Recognized Components is evaluated, the end-product evaluation process can be streamlined. |
| c US | The UL Recognized Component mark is for products intended to be installed in another device, system or end product. This Recognized Component Mark is for the United States and Canada. When a complete product or system containing UL Recognized Components is evaluated, the end-product evaluation process can be streamlined. |
| | CSA International (Canadian Standards Association), is a provider of product testing and certification services for electrical, mechanical, plumbing, gas and a variety of other products. Recognized in the U.S., Canada and around the world, CSA certification marks indicate that a product, process or service has been tested to a Canadian or U.S. standard and it meets the requirements of an applicable CSA standard or another recognized document used as a basis for certification. |
| c UL US | The UL Listing Mark means UL found that representative product samples met UL's safety requirements. These requirements are primarily based on UL's own published standards for safety. The C-UL-US Mark indicates compliance with both Canadian and U.S. requirements. The products with this type of Mark have been evaluated to Canadian safety requirements and U.S. safety requirements. |

## Clean Room Certifications:

The 2200 Series Conveyors are often used in clean room applications where the generation of particulates from the conveyor are a concern. In these applications the correct installation and application of the conveyor is critical to the proper running of the conveyor and minimizing the dust generated by the conveyor belt or modular belt. The end user must ensure that the conveyor belts are properly tracked and product accumulation is minimized to providing minimal dust generation.

All of the 2200 Series products are designed and constructed to be used in clean room environments. The following 2200 Series products have gone through third party testing and certification and are certified for use in ISO Standard 14644-1 Class 5 and Federal Standard 209 Class 100 Clean Room applications.

**2200 Series Belted Conveyor**

**2200 Series Precision Move Conveyor**

Contact the factory for copy of the certification.

## Materials and Chemical Resistance:

| Conveyor Frames, Plastics and Modular Belting | |
|---|---|
| The following is a list of base materials used in the 2200 Series conveyor: | |
| **Material** | **Conveyor Component** |
| Acetal Copolymer, POM | Modular Belts, molded bearing housings |
| Polypropylene, PP | Modular Belts |
| Polyamide, PA | Adjustable Guide Support Brackets |
| UHMW-PE | Modular Belt Slide Rail, Adjustable Guide Face |
| Thermoplastic Elastomer, TPE | Modular Belt Friction Insert |
| Aluminum, anodized (Note: cut ends of aluminum is not anodized) | Conveyor Frame, Support Legs, High Side Guiding, Adjustable Guide Horizontal Post, Adjustable Guide Rail |

The materials used in the 2200 & 2700 Series product can resist many chemicals, however some should be avoided. Avoid the following:

- Acids with PH less than 4
- Bases with PH higher than 9

**Resistance to Materials: Conveyor Frames, Plastics and Modular Belting**

The following table provides the resistance to materials used in the conveyor to several chemicals. Application testing is recommended to determine long term material durability.

**Legend:**
1 = Very good resistance | 2 = Good resistance | 3 = Moderate resistance | 4 = Not recommended | X = no data available

| Acids | Acetal POM | Polypropylene | Polyamide PA | UHMW-PE | Aluminum |
|---|---|---|---|---|---|
| Acetic acid | 3 | 1 | 4 | 1 | 2 |
| Benzoic acid | 3 | 1 | 4 | 1 | 4 |
| Boric acid | 3 | 1 | 2 | 1 | 2 |
| Citric acid | 3 | 1 | 2 | 1 | 2 |
| Chromic acid | 4 | 1 | 4 | 1 | 3 |
| Hydrofluoric acid | 4 | 1 | 4 | 1 | 4 |
| Hydrochloric acid | 4 | 1 | 4 | 1 | 3 |
| Hydro cyanic acid | 4 | X | 4 | 1 | 1 |
| Nitric acid | 4 | 1 | 4 | 1 | 3 |
| Oleic acid | 3 | 1 | 2 | 1 | 1 |
| Oxalic acid | 4 | 1 | 2 | 1 | 1 |
| Phosphoric acid | 4 | 1 | 4 | 1 | 3 |
| Sulphuric acid | 4 | 2 | 4 | 1 | 3 |
| Tartaric acid | 3 | 1 | 2 | 1 | 1 |
| **Basic Compounds** | **Acetal POM** | **Polypropylene** | **Polyamide PA** | **UHMW-PE** | **Aluminum** |
| Ammonia | 1 | 1 | 2 | 1 | 2 |
| Calcium hydroxide | 1 | X | 2 | 1 | 4 |
| Caustic soda | 1 | X | 2 | 1 | 3 |
| Potassium hydroxide | 1 | 1 | 2 | 1 | 4 |

**Resistance to Materials: Conveyor Frames, Plastics and Modular Belting** *(continued)*

**Legend:**
1 = Very good resistance | 2 = Good resistance | 3 = Moderate resistance |
4 = Not recommended | X = no data available

| Salts | Acetal POM | Polypropylene | Polyamide PA | UHMW-PE | Aluminum |
|---|---|---|---|---|---|
| Potassium bicarbonate | 2 | X | 2 | 1 | 1 |
| Potassium permanganate | 2 | 2 | 4 | 1 | 1 |
| Sodium cyanic | 2 | X | 2 | 1 | 4 |
| Sodium hydrochloride | 3 | X | 4 | 1 | 4 |
| Acid salt | 2 | X | 3 | 1 | X |
| Basic salt | 1 | X | 2 | 1 | X |
| Neutral salt | 1 | X | 2 | 1 | X |
| **Organic Compounds** | **Acetal POM** | **Polypropylene** | **Polyamide PA** | **UHMW-PE** | **Aluminum** |
| Acetone | 1 | 1 | 1 | 1 | 1 |
| Aniline | 2 | 1 | 3 | 1 | 1 |
| Benzene | 1 | 3 | 2 | 4 | 1 |
| Benzine | 2 | X | 2 | 3 | 1 |
| Butyl alcohol | 2 | X | 2 | 1 | 1 |
| Carbon disulphide | 1 | 3 | 2 | 3 | 1 |
| Carbon tetrachloride | 1 | 3 | 1 | 3 | 2 |
| Chloroform | 1 | 4 | 3 | 4 | X |
| Ethyl acetate | 1 | 1 | 2 | 1 | 1 |
| Ethyl alcohol | 1 | X | 2 | 1 | 1 |
| Heptane | 2 | 1 | 1 | 2 | X |
| Methyl alcohol | 1 | X | 2 | 1 | 2 |
| Methyl ethyl ketone | 1 | 2 | 1 | 2 | 2 |
| Nitrobenzene | 2 | 2 | 2 | 1 | 1 |
| Phenol | 3 | 1 | 4 | 1 | 1 |
| **Gases** | **Acetal POM** | **Polypropylene** | **Polyamide PA** | **UHMW-PE** | **Aluminum** |
| Carbon dioxide | 3 | 1 | 1 | 1 | 1 |
| Carbon monoxide | 2 | X | 1 | 1 | 1 |
| Chlorine | 2 | 4 | 4 | 3 | 1 |
| Hydrogen Sulfide | 3 | 1 | 1 | 1 | 1 |
| Sulphur dioxide | 2 | 1 | 3 | 1 | 1 |
| **Other** | **Acetal POM** | **Polypropylene** | **Polyamide PA** | **UHMW-PE** | **Aluminum** |
| Carbon tetrachloride | 1 | 3 | 1 | 3 | 2 |
| Beer | 1 | 1 | 2 | 1 | 1 |
| Fruit juice | 1 | 2 | 2 | 1 | 2 |
| Gasoline | 1 | 1 | 2 | 1 | 1 |
| Milk | 1 | 1 | 1 | 1 | 1 |
| Oil | 1 | 3 | 1 | 1 | 1 |
| Vinegar | 1 | 1 | 2 | 1 | 1 |

## Belting:

The following is a list of the top coat materials used in 2200 Series conveyor belting:

| Material | Belt Number |
|---|---|
| Urethane | 01, 02, 03, 05, 06, 09, 54, 55, 56, 53, 60, 61, 63, 68, 69, 72, 73, 75, 76, 77 |
| PVC (non FDA approved) | 08, 18, 59, 64 |
| Silicone | 50, 80, 81 |
| Polyester | 66 |
| Nitrile | 57 |
| Urethane (hard) | 58 |

## Resistance to Materials: Belting

The following table provides the resistance to belt materials used in the conveyor to several chemicals. Application testing is recommended to determine long term material durability.

**Legend:**
1 = Good resistance | 3 = Limited resistance | 4 = Not recommended

| Materials | Urethane | PVC (non FDA) | Silicone | Polyester | Urethane (hard) |
|---|---|---|---|---|---|
| **Chemicals** | | | | | |
| Acetic acid (glacial acetic acid) | 4 | 3 | 1 | 1 | 4 |
| Acetic acid 10 % | 3 | 1 | 1 | 3 | 1 |
| Acetic anhydride | 3 | 4 | 1 | 1 | 4 |
| Acetone | 4 | 4 | 1 | 3 | 4 |
| Aluminium salts | 1 | 1 | 1 | 1 | 1 |
| Alum | 1 | 1 | 1 | 1 | 1 |
| Ammonia, aqueous | 3 | 1 | 1 | 3 | 1 |
| Ammonia, gaseous | 1 | 1 | 3 | 1 | 1 |
| Ammonium acetate | 1 | 1 | 1 | 1 | 1 |
| Ammonium carbonate | 1 | 1 | 1 | 1 | 1 |
| Ammonium chloride | 1 | 1 | 1 | 1 | 1 |
| Ammonium nitrate | 1 | 1 | 1 | 1 | 1 |
| Ammonium phosphate | 1 | 1 | 1 | 1 | 1 |
| Ammonium sulphate | 1 | 1 | 1 | 1 | 1 |
| Amyl alcohol | 1 | 4 | 3 | 1 | 1 |
| Aniline | 3 | 3 | 3 | 4 | 4 |
| Barium salts | 1 | 1 | 1 | 1 | 1 |
| Benzaldehyde | 4 | 4 | 4 | 4 | 4 |
| Benzine (see also Motor fuels) | 1 | 3 | 3 | 1 | 1 |
| Benzoic acid | 1 | 1 | 1 | 1 | 1 |
| Benzol | 3 | 4 | 4 | 3 | 3 |
| Boric acid | 1 | 1 | 1 | 1 | 1 |
| Boric acid, solution | 1 | 1 | 1 | 1 | 1 |
| Bromine | 4 | 4 | 4 | 4 | 4 |
| Bromine water | 4 | 3 | 1 | 4 | 3 |
| Butane, gaseous | 1 | 1 | 1 | 1 | 1 |
| Butane, liquid | 1 | 1 | 1 | 1 | 1 |
| Butyl acetate | 4 | 4 | 4 | 3 | 4 |
| n-Butyl alcohol | 1 | 3 | 1 | 1 | 1 |
| Calcium chloride | 1 | 1 | 1 | 1 | 1 |
| Calcium nitrate | 1 | 1 | 1 | 1 | 1 |

**Resistance to Materials: Belting** *(continued)*

**Legend:**
1 = Good resistance | 3 = Limited resistance | 4 = Not recommended

| Materials | Urethane | PVC (non FDA) | Silicone | Polyester | Urethane (hard) |
|---|---|---|---|---|---|
| Calcium sulphate | 1 | 1 | 1 | 1 | 1 |
| Carbon disulphide | 4 | 4 | 3 | 4 | 4 |
| Carbon tetrachloride | 3 | 4 | 4 | 4 | 3 |
| Chlorine, liquid | 4 | 4 | 4 | 4 | 4 |
| Chlorine, gaseous, dry | 4 | 4 | 4 | 4 | 4 |
| Chlorine, gaseous, wet | 4 | 4 | 4 | 4 | 4 |
| Chlorine water | 4 | 1 | 3 | 4 | 3 |
| Chlorobenzene | 4 | 4 | 4 | 4 | 4 |
| Chloroform | 4 | 4 | 4 | 4 | 4 |
| Chlorosulphonic acid | 4 | 4 | 4 | 4 | 4 |
| Chromic acid | 4 | 4 | 4 | 4 | 4 |
| Chromium salts | 1 | 1 | 1 | 1 | 1 |
| Chromium trioxide | 1 | 1 | 1 | 1 | 1 |
| Citric acid | 4 | 1 | 1 | 1 | 4 |
| Copper salts | 1 | 1 | 1 | 1 | 3 |
| Cresols | 3 | 3 | 3 | 4 | 3 |
| Cresols, aqueous | 3 | 3 | 3 | 3 | 3 |
| Cyclohexane | 4 | 4 | 4 | 1 | 4 |
| Cyclohexanol | 4 | 4 | 4 | 4 | 4 |
| Cyclohexanone | 4 | 4 | 4 | 4 | 4 |
| Decahydronaphthalene | 4 | 4 | 4 | 4 | 4 |
| Dibutyl phthalate | 3 | 4 | 1 | 4 | 4 |
| Diethyl ether | 4 | 4 | 4 | 4 | 4 |
| Dimethyl formamide | 4 | 4 | 3 | 4 | 4 |
| 1.4 Dioxan | 4 | 4 | 3 | 4 | 4 |
| Ether | 4 | 4 | 4 | 4 | 4 |
| Ethyl acetate | 4 | 4 | 4 | 3 | 4 |
| Ethyl alcohol, non-denatured 100% | 1 | 3 | 3 | 1 | 1 |
| Ethyl alcohol, non-denatured 96% | 1 | 3 | 3 | 1 | 1 |
| Ethyl alcohol, non-denatured 50% | 1 | 3 | 3 | 1 | 1 |
| Ethyl alcohol, non-denatured 10% | 1 | 3 | 1 | 1 | 1 |
| Ethyl benzene | 4 | 4 | 4 | 4 | 4 |
| Ethyl chloride | 4 | 4 | 4 | 4 | 4 |
| Ethylene chloride | 4 | 4 | 4 | 4 | 4 |
| 2-Ethyl hexanol | 1 | 3 | 1 | 1 | 1 |
| Formaldehyde | 1 | 3 | 1 | 3 | 1 |
| Formic acid, dilute | 4 | 1 | 1 | 3 | 3 |
| Glycerine | 1 | 1 | 1 | 1 | 1 |
| Glycerine, aqueous | 1 | 1 | 1 | 1 | 1 |
| Glycol | 1 | 3 | 1 | 1 | 1 |
| Glycol, aqueous | 1 | 1 | 1 | 1 | 1 |
| Heptane | 1 | 3 | 3 | 1 | 1 |
| Hexane | 1 | 3 | 3 | 1 | 1 |
| Hydrochloric acid, conc. | 3 | 1 | 4 | 3 | 1 |

**Resistance to Materials: Belting** *(continued)*

**Legend:**
1 = Good resistance | 3 = Limited resistance | 4 = Not recommended

| Materials | Urethane | PVC (non FDA) | Silicone | Polyester | Urethane (hard) |
|---|---|---|---|---|---|
| Hydrochloric acid 10 % | 3 | 1 | 1 | 1 | 1 |
| Hydrofluoric acid 40 % | 4 | 4 | 4 | 4 | 4 |
| Hydrogen chloride, gaseous, dilute | 3 | 1 | 3 | 3 | 1 |
| Hydrogen chloride, gaseous, conc. | 3 | 3 | 3 | 4 | 3 |
| Hydrogen peroxide 10% | 3 | 1 | 1 | 3 | 1 |
| Hydrogen sulphide | 3 | 3 | 3 | 3 | 3 |
| Iron salts (sulphate) | 1 | 1 | 1 | 1 | 1 |
| Isooctane | 1 | 3 | 3 | 1 | 1 |
| Isopropyl alcohol | 1 | 3 | 1 | 1 | 1 |
| Lactic acid | 1 | 3 | 1 | 1 | 1 |
| Magnesium salts | 1 | 1 | 1 | 1 | 1 |
| Mercury | 1 | 1 | 1 | 1 | 1 |
| Mercury salts | 1 | 1 | 1 | 1 | 1 |
| Methyl alcohol, aqueous 50 % | 3 | 3 | 1 | 1 | 1 |
| Methyl alcohol (methanol) | 1 | 3 | 1 | 1 | 1 |
| Methyl ethyl ketone | 4 | 4 | 1 | 3 | 4 |
| Methylene chloride | 4 | 4 | 4 | 4 | 4 |
| Naphthalene | 3 | 4 | 4 | 3 | 4 |
| Nickel salts | 1 | 1 | 1 | 1 | 1 |
| Nitric acid | 4 | 3 | 4 | 4 | 4 |
| Nitrobenzene | 4 | 4 | 1 | 3 | 4 |
| Octane (see also isooctane) | 1 | 3 | 4 | 1 | 1 |
| Oleic acid | 1 | 3 | 4 | 1 | 1 |
| Oxalic acid | 1 | 1 | 1 | 1 | 1 |
| Ozone | 1 | 3 | 3 | 1 | 3 |
| Perchloroethylene | 4 | 4 | 4 | 4 | 4 |
| Phenol | 3 | 3 | 1 | 4 | 3 |
| Phenol, aqueous | 4 | 3 | 1 | 4 | 3 |
| Phosphoric acid 85 % | 4 | 1 | 1 | 3 | 1 |
| Phosphoric acid 50 % | 1 | 1 | 1 | 1 | 1 |
| Phosphoric acid 10 % | 1 | 1 | 1 | 1 | 1 |
| Phosphorus pentoxide | 1 | 1 | 1 | 1 | 1 |
| Potash lye 50 % | 4 | 1 | 4 | 3 | 4 |
| Potash lye 25 % | 4 | 1 | 4 | 1 | 4 |
| Potash lye 10 % | 4 | 1 | 3 | 1 | 4 |
| Potassium carbonate (potash) | 1 | 1 | 1 | 1 | 1 |
| Potassium chlorate | 1 | 1 | 1 | 1 | 1 |
| Potassium chloride | 1 | 1 | 1 | 1 | 1 |
| Potassium dichromate | 1 | 1 | 1 | 1 | 1 |
| Potassium iodide | 1 | 1 | 1 | 1 | 1 |
| Potassium nitrate | 1 | 1 | 1 | 1 | 1 |
| Potassium permanganate | 1 | 1 | 1 | 1 | 1 |
| Potassium persulphate | 1 | 1 | 1 | 1 | 1 |
| Potassium sulphate | 1 | 1 | 1 | 1 | 1 |
| Propane, gaseous | 1 | 1 | 1 | 1 | 1 |

**Resistance to Materials: Belting** *(continued)*

**Legend:**
1 = Good resistance | 3 = Limited resistance | 4 = Not recommended

| Materials | Urethane | PVC (non FDA) | Silicone | Polyester | Urethane (hard) |
|---|---|---|---|---|---|
| Propane, liquid | 1 | 1 | 1 | 1 | 1 |
| Pyridine | 4 | 4 | 3 | 4 | 4 |
| Silver salts | 1 | 1 | 1 | 1 | 1 |
| Soda lye 50% (see potash lye) | 4 | 1 | 4 | 4 | 4 |
| Soda lye 25% | 4 | 1 | 4 | 3 | 4 |
| Soda lye 10% | 4 | 1 | 3 | 1 | 4 |
| Sodium bisulphite | 1 | 1 | 1 | 1 | 1 |
| Sodium carbonate (natron) | 1 | 1 | 1 | 1 | 1 |
| Sodium carbonate (soda) | 1 | 1 | 1 | 1 | 1 |
| Sodium chlorate | 1 | 1 | 1 | 1 | 1 |
| Sodium chloride (common salt) | 1 | 1 | 1 | 1 | 1 |
| Sodium hydroxide (caustic soda) | 4 | 1 | 4 | 1 | 4 |
| Sodium hypochlorite | 1 | 1 | 1 | 3 | 1 |
| Sodium nitrate | 1 | 1 | 1 | 1 | 1 |
| Sodium nitrite | 1 | 1 | 1 | 1 | 1 |
| Sodium perborate | 1 | 1 | 1 | 1 | 1 |
| Sodium phosphate | 1 | 1 | 1 | 1 | 1 |
| Sodium sulphate (Glauber salt) | 1 | 1 | 1 | 1 | 1 |
| Sodium sulphide | 1 | 1 | 1 | 1 | 1 |
| Sodium sulphite | 1 | 1 | 1 | 1 | 1 |
| Sodium thiosulphate (fixing salt) | 1 | 1 | 1 | 1 | 1 |
| Stearic acid | 1 | 1 | 1 | 1 | 1 |
| Succinic acid | 1 | 1 | 1 | 1 | 1 |
| Sulphur | 1 | 1 | 1 | 1 | 1 |
| Sulphur dioxide | 3 | 3 | 3 | 3 | 4 |
| Sulphuric acid 96% | 4 | 4 | 4 | 4 | 4 |
| Sulphuric acid 50% | 4 | 3 | 4 | 3 | 4 |
| Sulphuric acid 25% | 4 | 3 | 3 | 1 | 3 |
| Sulphuric acid 10% | 4 | 3 | 1 | 1 | 3 |
| Tartaric acids | 1 | 1 | 1 | 1 | 1 |
| Tetrachloroethane | 4 | 4 | 4 | 4 | 4 |
| Tetrachloroethylene (perchloroethylene) | 4 | 4 | 4 | 4 | 4 |
| Tetrahydrofuran | 4 | 4 | 4 | 4 | 4 |
| Tetrahydronaphthalene | 4 | 4 | 4 | 4 | 4 |
| Thiophene | 4 | 4 | 4 | 4 | 4 |
| Tin II chlorides | 1 | 1 | 1 | 1 | 1 |
| Toluene | 4 | 4 | 4 | 4 | 4 |
| Trichloroethylene | 4 | 4 | 4 | 4 | 4 |
| Urea, aqueous | 1 | 1 | 1 | 1 | 1 |
| Water | 1 | 1 | 1 | 1 | 1 |
| Xylene | 4 | 4 | 4 | 3 | 4 |
| Zinc salts | 1 | 1 | 1 | 1 | 1 |

**Resistance to Materials: Belting** *(continued)*

**Legend:**
1 = Good resistance | 3 = Limited resistance | 4 = Not recommended

| Materials | Urethane | PVC (non FDA) | Silicone | Polyester | Urethane (hard) |
|---|---|---|---|---|---|
| **Products** | | | | | |
| Alum | 1 | 1 | 1 | 1 | 1 |
| Anti-freeze* | 1 | 3 | 1 | 1 | 1 |
| Aqua regia | 4 | 4 | 4 | 4 | 4 |
| Asphalt | 1 | 3 | 3 | 1 | 1 |
| Battery acid | 4 | 4 | 4 | 4 | 4 |
| Benzine | 1 | 3 | 3 | 1 | 1 |
| Bleaching lye (12.5%) | 1 | 1 | 1 | 1 | 3 |
| Bone oil | 1 | 3 | 4 | 1 | 1 |
| Borax | 1 | 1 | 1 | 1 | 1 |
| Brake fluid* Bosch | 1 | 3 | 1 | 1 | 3 |
| Brake fluid* Skydrol | 4 | 4 | 3 | 4 | 4 |
| Chloride of lime (aqueous suspension) | 1 | 1 | 1 | 1 | 3 |
| Chlorine (active) | 4 | 4 | 4 | 4 | 4 |
| Chrome baths* (technical) | 1 | 3 | 3 | 1 | 1 |
| Chromosulphuric acid | 4 | 4 | 4 | 4 | 4 |
| Cresol solution | 3 | 3 | 4 | 4 | 4 |
| Diesel oil | 1 | 1 | 3 | 1 | 1 |
| Fertilizer salts | 1 | 1 | 1 | 1 | 1 |
| Fixing salt | 1 | 1 | 1 | 1 | 1 |
| Floor wax | 1 | 3 | 3 | 1 | 1 |
| Formalin | 1 | 3 | 3 | 1 | 1 |
| Fuel oils* | 1 | 1 | 3 | 1 | 1 |
| Furniture polish* | 1 | 3 | 3 | 1 | 1 |
| Gypsum | 1 | 1 | 1 | 1 | 1 |
| Ink* | 1 | 1 | 1 | 1 | 1 |
| Linseed oil | 1 | 3 | 1 | 1 | 1 |
| Litex (styrene) | 4 | 4 | 4 | 4 | 4 |
| Mineral oils (non-aromatic) | 1 | 1 | 1 | 1 | 1 |
| Moth balls | 3 | 4 | 3 | 3 | 3 |
| Diesel oil* | 1 | 1 | 3 | 1 | 1 |
| Petrol (gasoline) DIN51635 | 1 | 3 | 3 | 1 | 1 |
| Petrol, regular | 1 | 3 | 3 | 1 | 1 |
| Petrol, super | 3 | 4 | 3 | 1 | 3 |
| Motor oils* | 1 | 1 | 1 | 1 | 1 |
| Oil no. 3 (ASTM) | 1 | 3 | 1 | 1 | 1 |
| Oleum | 4 | 4 | 4 | 4 | 4 |
| Paraffin | 1 | 1 | 1 | 1 | 1 |
| Paraffin oil | 1 | 1 | 1 | 1 | 1 |
| Petroleum | 1 | 3 | 3 | 1 | 1 |
| Petroleum ether | 1 | 3 | 4 | 1 | 1 |
| Photographic developer | 1 | 1 | 1 | 1 | 1 |

## Bearings and Lubrication:

All bearings on the 2200 & 2700 Series conveyor are sealed and lubricated for life. No grease zerk is available and no greasing over the life of the product is required.

All gearmotors used on the 2200 & 2700 series conveyor are sealed and may be mounted in any position. Changing gear oil lubrication may be needed over the life of the gearbox. Please check the appropriate gearmotor manual for instructions.

## Support Stand Locations:

| Support Stand Locations | | |
|---|---|---|
| **Symbol** | **Description** | **Value, mm (inches)** |
| A* | Maximum distance back at drive end | 457 (18) |
| B | Maximum distance back at idler end | 610 (24) |
| C | Maximum distance between supports | 2743 (96) |
| D** | Maximum distance away from frame split | 600 (12) |

***Note:** For heavy load mount packages stand location must be mounted directly under gearmotor.
****Note:** Mounting offset frame split requires tie kit 206519

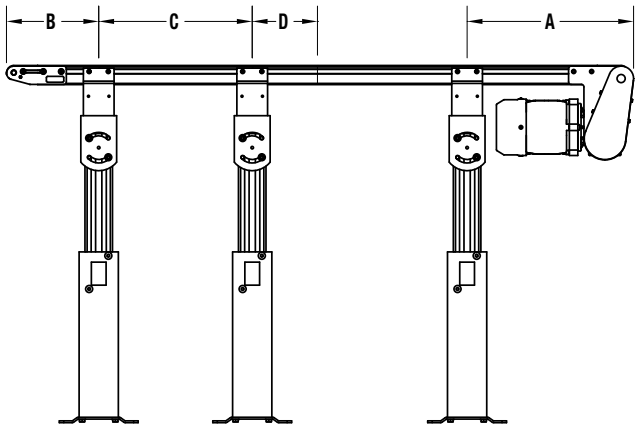


## Conveyor Drive Shaft Tolerances:

### 2200 Belted & Modular Belt End Drive:

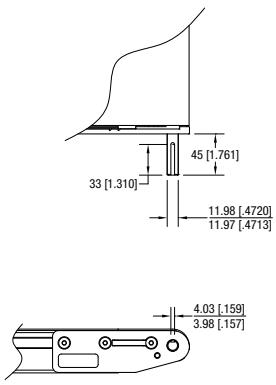


### 2200 Center Drive:

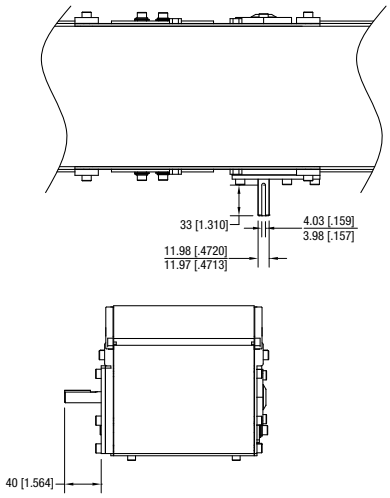


### 2700 Belted End Drive:

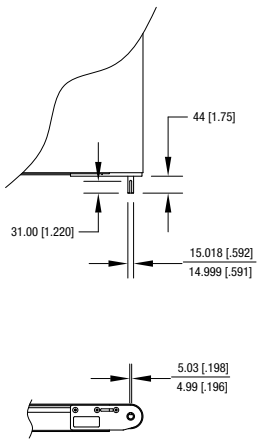


### 2700 Mid Drive:

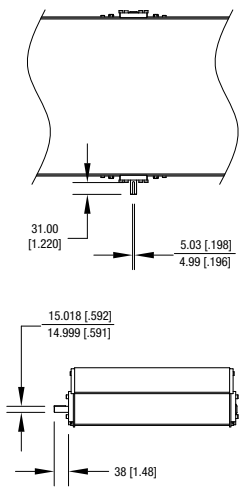

## Conveyor Noise Level (Decibel Ratings)

The actual noise level generated by the conveyor depends on several factors; the installation configuration, the product running on the conveyor, the surrounding equipment, the conveyor options and belt speed. The noise level generated by the conveyor is typically less than the general noise level of factory equipment.

Generally a higher belt speed will result in a higher noise level. In addition modular belt conveyors will run slightly louder than belted conveyors. The following charts provide basic decibel ratings for a typical conveyor arrangements.

**Belted Conveyors:**

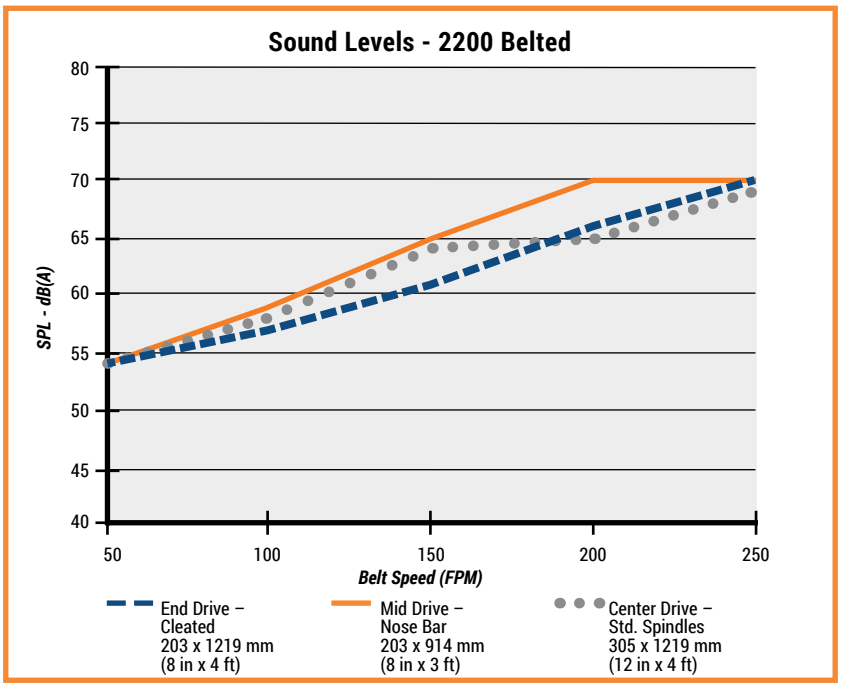


**Modular Belt Conveyors:**

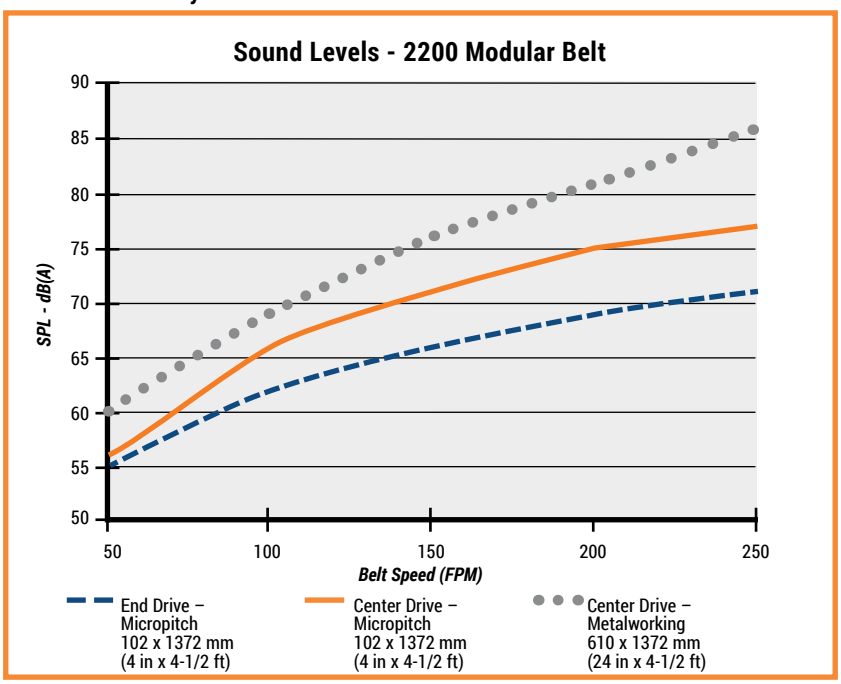

## Maximum Load Capacity

The following Load Capacity Charts **do not** take into account the conveyor configuration, length or gearmotor selection. Your specific conveyor may not be capable of the maximum load condition. Please confirm your maximum load per application with the Dorner DTools program at www.dornerconveyors.com.

All load capacities shown are non-accumulated evenly distributed loads.

**2200 Series End Drive Belted Conveyor**

| Belt Width | Direction 1, Pulling the Belt | Direction 2 Needs to be 1/3 of Direction 1 |
|---|---|---|
| 51 (2 in) wide | 14 kg (30 lbs) | 4.54 kg (10 lbs) |
| 76 (3 in) wide | 16 kg (35 lbs) | 5.44 kg (12 lbs) |
| 102 (4 in) wide | 19 kg (42 lbs) | 6.35 kg (14 lbs) |
| 127 (5 in) wide | 23 kg (50 lbs) | 7.66 kg (17 lbs) |
| 152 (6 in) wide | 27 kg (60 lbs) | 9 kg (19 lbs) |
| 203 (8 in) wide | 32 kg (70 lbs) | 10.66 kg (23 lbs) |
| 254 to 610 mm (10 to 24 in) wide | 36 kg (80 lbs) | 12 kg (26 lbs) |

**2200 Series Belted Center Drive Conveyor**

| Belt Width | Direction 1, Pulling the Belt | Direction 2, Pushing the Belt |
|---|---|---|
| 51 (2 in) wide | 18 kg (40 lbs) | 6 kg (13 lbs) |
| 76 (3 in) wide | 23 kg (50 lbs) | 8 kg (17 lbs) |
| 102 (4 in) wide | 27 kg (60 lbs) | 9 kg (20 lbs) |
| 127 (5 in) wide | 34 (75 lbs) | 11 kg (25 lbs) |
| 152 (6 in) wide | 41 kg (90 lbs) | 14 kg (30 lbs) |
| 203 (8 in) wide | 48 kg (105 lbs) | 16 kg (35 lbs) |
| 254 to 610 mm (10 to 24 in) wide | 54 kg (120 lbs) | 18 kg (40 lbs) |

**2200 Series Mid Drive Belted Conveyor**

| Belt Width | Either Direction |
|---|---|
| 51 (2 in) wide | 14 kg (30 lbs) |
| 76 (3 in) wide | 16 kg (35 lbs) |
| 102 (4 in) wide | 19 kg (42 lbs) |
| 127 (5 in) wide | 23 kg (50 lbs) |
| 152 (6 in) wide | 27 kg (60 lbs) |
| 203 (8 in) wide | 32 kg (70 lbs) |
| 254 to 610 mm (10 to 24 in) wide | 36 kg (80 lbs) |

**2200 Series Precision Move End and Mid Drive Conveyor**

| Belt Width | Either Direction |
|---|---|
| 25 mm (1 in) wide | 91 kg (200 lbs) |
| 51 (2 in) wide | 91 kg (200 lbs) |
| 76 (3 in) wide | 91 kg (200 lbs) |
| 102 (4 in) wide | 91 kg (200 lbs) |
| 152 (6 in) wide | 91 kg (200 lbs) |
| 203 (8 in) wide | 91 kg (200 lbs) |
| 305 (12 in) wide | 91 kg (200 lbs) |
| 457 (18 in) wide | 91 kg (200 lbs) |
| 610 (24 in) wide | 91 kg (200 lbs) |

**2700 Series End Drive Belted Conveyor**

| Belt Width | Direction 1, Pulling the Belt | Direction 2, Pushing the Belt |
|---|---|---|
| 203 (8 in) wide | 45 kg (99 lbs) | 15 kg (33 lbs) |
| 254 (10 in) wide | 48 kg (106 lbs) | 16 kg (35 lbs) |
| 305 (12 in) wide | 51 kg (112 lbs) | 17 kg (37 lbs) |
| 356 (14 in) wide | 54 kg (119 lbs) | 18 kg (40 lbs) |
| 406 (16 in) wide | 57 kg (125 lbs) | 19 kg (42 lbs) |
| 457 (18 in) wide | 60 kg (132 lbs) | 20 kg (44 lbs) |
| 508 (20 in) wide | 63 kg (139 lbs) | 21 kg (46 lbs) |
| 559 (22 in) wide | 66 kg (145 lbs) | 22 kg (48 lbs) |
| 610 to 914 mm (24 to 36 in) wide | 68 kg (150 lbs) | 23 kg (51 lbs) |

**2700 Series Mid Drive Belted Conveyor**

| Belt Width | Direction 1, Pulling the Belt |
|---|---|
| 203 (8 in) wide | 45 kg (99 lbs) |
| 254 (10 in) wide | 48 kg (106 lbs) |
| 305 (12 in) wide | 51 kg (112 lbs) |
| 356 (14 in) wide | 54 kg (119 lbs) |
| 406 (16 in) wide | 57 kg (125 lbs) |
| 457 (18 in) wide | 60 kg (132 lbs) |
| 508 (20 in) wide | 63 kg (139 lbs) |
| 559 (22 in) wide | 66 kg (145 lbs) |
| 610 to 914 mm (24 to 36 in) wide | 68 kg (150 lbs) |

**2200 Series Modular Belt End and Center Drive Conveyor**

| Belt Width | Direction 1, Pulling the Belt |
|---|---|
| 76 (3 in) wide | 36 kg (80 lbs) |
| 102 (4 in) wide | 36 kg (80 lbs) |
| 152 (6 in) wide | 45 kg (100 lbs) |
| 203 (8 in) wide | 45 kg (100 lbs) |
| 305 (12 in) wide | 68 kg (150 lbs) |
| 457 (18 in) wide | 68 kg (150 lbs) |
| 610 (24 in) wide | 68 kg (150 lbs) |

## No Load Torque

No load torque is the amount of torque required to turn an empty conveyor. The torque value varies by conveyor length and configuration. The following charts provide basic values for an average length conveyor. Your specific conveyor may not have a higher value. Please confirm your no load torque and maximum load per application with the Dorner DTools program at www.dornerconveyors.com.

### Belted Conveyor

| 2200 Series Belted Conveyor No Load Torque | | | |
|---|---|---|---|
| Belt Width mm (in) | End Drive Nm (in-lbs) | Mid Drive Nm (in-lbs) | Center Drive Nm (in-lbs) |
| 44 (1.75) | 0.5 (4) | 0.8 (7) | 1 (9) |
| 70 (2.75) | 0.6 (5) | 0.9 (8) | 1.1 (10) |
| 95 (3.75) | 0.7 (6) | 1 (9) | 1.2 (11) |
| 127 (5) | 0.8 (7) | 1.1 (10) | 1.4 (12) |
| 152 (6) | 0.9 (8) | 1.4 (12) | 1.7 (15) |
| 203 (8) | 1.1 (10) | 1.7 (15) | 2.3 (20) |
| 254 (10) | 1.4 (12) | 2 (18) | 2.6 (23) |
| 305 (12) | 1.6 (14) | 2.3 (20) | 2.8 (25) |
| 356 (14) | 1.7 (15) | 2.4 (21) | 3.1 (27) |
| 406 (16) | 1.8 (16) | 2.5 (22) | 3.2 (28) |
| 457 (18) | 1.9 (17) | 2.7 (24) | 3.4 (30) |
| 508 (20) | 2 (18) | 2.8 (25) | 3.6 (32) |
| 559 (22) | 2.1 (19) | 2.9 (26) | 3.7 (33) |
| 610 (24) | 2.3 (20) | 3.2 (28) | 4 (35) |

| 2700 Series Belted Conveyor No Load Torque | | |
|---|---|---|
| Belt Width mm (in) | End Drive Nm (in-lbs) | Mid Drive Nm (in-lbs) |
| 203 (8) | 0.68 (6) | 1.02 (9) |
| 254 (10) | 0.85 (7.5) | 1.19 (10.5) |
| 305 (12) | 1.02 (9) | 1.36 (12) |
| 356 (14) | 1.19 (10.5) | 1.53 (13.5) |
| 406 (16) | 1.36 (12) | 1.69 (15) |
| 457 (18) | 1.53 (13.5) | 1.86 (16.5) |
| 508 (20) | 1.69 (15) | 2.03 (18) |
| 559 (22) | 1.86 (16.5) | 2.2 (19.5) |
| 610 (24) | 2.03 (18) | 2.37 (21) |
| 660 (26) | 2.2 (19.5) | 2.54 (22.5) |
| 711 (28) | 2.37 (21) | 2.71 (24) |
| 762 (30) | 2.54 (22.5) | 2.88 (25.5) |
| 813 (32) | 2.71 (24) | 3.05 (27) |
| 864 (34) | 2.88 (25.5) | 3.22 (28.5) |
| 914 (36) | 3.05 (27) | 3.39 (30) |

### Modular Belt Conveyor:

The no load torque on modular belt conveyors is dependent on the conveyor length and width. Use the following formula to determine no load torque. Where:

Metric Units:

L = Conveyor Length (mm); W = Conveyor Width (mm)

Micropitch no load torque (Nm) = (L/1000)*2*(W/1000)*(6.36 kg/sq m)*(0.3 COF)*(7.87 mm pitch/1000)*(9.81N/Kg)

Metalworking no load torque (Nm) = (L/1000)*2*(W/1000)*(6.36 kg/sq m)*(0.3 COF)*(14.98 mm pitch/1000)*(9.81N/Kg)

Example: 2200 Series Modular Belt 203 mm wide x 3048 mm long.

Micropitch no load torque (Nm) = (3048/1000)*2*(203/1000)*(6.36 kg/sq m)*(0.3 COF)*(7.87 mm pitch/1000)*(9.81N/Kg) = 0.18 Nm

Metalworking no load torque (Nm) = (3048/1000)*2*(203/1000)*(6.36 kg/sq m)*(0.3 COF)*(14.98 mm pitch/1000)*(9.81N/Kg) = 0.35 Nm

Imperial Units:

L = Conveyor Length (ft); W = Conveyor Width (in)

Micropitch no load torque (in-lbs) = (L)*2*(W/12)*1.3 lb/sq ft)*(0.3 COF)*(0.31 in pitch)*0.858

Metalworking no load torque (in-lbs) = (L)*2*(W/12)*1.3 lb/sq ft)*(0.3 COF)*(0.59 in pitch)*0.94

Example: 2200 Series Modular Belt 8 in wide x 10 ft long

Micropitch no load torque (in-lbs) = (10)*2*(8/12)*1.3 lb/sq ft)*(0.3 COF)*(0.31 in pitch)*0.858 = 1.38

Metalworking no load torque (in-lbs) = (10)*2*(8/12)*1.3 lb/sq ft)*(0.3 COF)*(0.59 in pitch)*0.94 = 2.88

## Belting and Coefficient of Friction

The coefficient of friction is used to determine the load a conveyor can carry. It effects a conveyor in two ways: the friction that exists between the conveyor belt and the bed surface, and if accumulating product, the friction that exists between the conveyor top surface and the product.

### Coefficient of Friction, between the bottom of the conveyor belt and bed surface:

| Product | Surfaces | Application Condition | Coefficient of Friction |
|---|---|---|---|
| 2200 & 2700 Series Belted | Impregnated polyester fabric to anodized aluminum bed plate | Dry | 0.33 |
| 2200 Series Modular Belt | Acetal modular belt to UHMW wear strips | Dry | 0.30 |

### Coefficient of Friction, between the top surface of conveyor belt and product:

**2200 & 2700 Series Belted**

The following table provides the coefficient of friction between steel product and various belt top surfaces. All factors below are assuming dry conditions.

| Belt Number | Top Surface Material and Type | Coefficient of Friction |
|---|---|---|
| 01, 54, 58, 68, 73, 81 | Smooth hard urethane | 0.40 |
| 02, 59, 60, 61, 66, 72, 76, 79 | Smooth medium urethane | 0.50 |
| 03, 19, 55, 69, 75, 77, 78, 80 | Glossy soft urethane | >1.0, do not accumulate |
| 05, 06, 50, 53, 63 | Impregnated polyester fabric | 0.20 |
| 08, 18, 64 | PVC, Very High friction | >1.0, do not accumulate |

**2200 Series Modular Belt**

The following table provides the coefficient of friction between acetal modular belt and various products. All factors below are assuming dry conditions.

| Product Being Accumulated | Typical Coefficient of Friction |
|---|---|
| Steel | 0.25 |
| Glass | 0.20 |
| Aluminum | 0.25 |
| Plastic | 0.25 |
| Wood | 0.30 |
| Paper and Cardboard | 0.30 |

## Calculating Conveyor Belt Speed

**2200 & 2700 Series Belted Conveyors:**

To calculate the conveyor belt speed you need to know the following factors:

- Drive roller diameter
  - 32 mm (1.25 in) for 2200 end, mid and center drives
  - 60 mm (2.4 in) for 2700 end and mid drives
- Number of teeth of pulley located at drive roller (if equipped)
- Number of teeth of pulley located at gearmotor (if equipped)
- RPM of gearmotor

$$\text{Belt Speed (ft/min)} = (\text{Drive roller diameter}/12)*(3.14)*(\text{RPM of gearmotor})*\frac{(\text{Teeth at gearmotor})}{(\text{Teeth at drive roller})}$$

Example:

2200 Series End Drive with a Bottom mount with a 28 tooth pulley located at the drive roller and a 44 tooth pulley located on the gearmotor. The gearmotor is a 20:1 ratio with 86 rpm output.

Belt Speed (ft/min) = (1.25/12)*(3.14)*(86)*(44/28)

Belt speed (ft/min) = 44.2 ft/min

**2200 Series Modular Belt Conveyors:**

To calculate the conveyor belt speed you need to know the following factors:

- Drive sprocket pitch diameter
  - 43.4 mm (1.71 in) for Belts 01 and 02
  - 47.8 mm (1.88 in) for Belts 30, 31, 32, 40, 41 and 42
- Number of teeth of pulley located at drive roller (if equipped)
- Number of teeth of pulley located at gearmotor (if equipped)
- RPM of gearmotor

$$\text{Belt Speed (ft/min)} = (\text{Drive pitch diameter}/12)*(3.14)*(\text{RPM of gearmotor})*\frac{(\text{Teeth at gearmotor})}{(\text{Teeth at drive roller})}$$

Example:

2200 Series Straight Modular Belt Conveyor with a Bottom mount with a 28 tooth pulley located at the drive roller and a 44 tooth pulley located on the gearmotor. The gearmotor is a 20:1 ratio with 86 rpm output. Belt type is 30.

Belt Speed (ft/min) = (1.88/12)*(3.14)*(86)*(44/28)

Belt speed (ft/min) = 66 ft/min

## Calculating Conveyor Load Capacity

There are several factor that effect the overall conveyor load of the 2200 & 2700 Series conveyor. These include:

- Conveyor size and configuration
- Conveyor speed
- Application temperature
- Product Accumulation
- Number of starts and stops per hour

Located online at www.dornerconveyors.com is the Dorner conveyor configuration tool, DTools. This tool allows you to configure your conveyor layout and determine the maximum load capacity for the conveyor. It is suggested that this program be used to calculate the conveyor load as the calculation is quite complicated. This configuration program however does not take into account temperature, dirty conditions, and conveyor starts and stops. If these conditions are part of your application please use the load reducing factors as shown below.

Maximum Load = (Load from DTools)(Temperature Factor)(Start/Stop Factor)

| Temperature Factor | | |
|---|---|---|
| Ambient temperature can negatively affect the capacity of the conveyor. | | |
| **Temperature F** | **Temperature C** | **Temperature Factor** |
| -4 | -20 | 1.0 |
| 32 | 0 | 1.0 |
| 68 | 20 | 1.0 |
| 104 | 40 | 0.9 |
| 140 | 60 | 0.8 |

| Start / Stop Factor | |
|---|---|
| Frequent Start / Stops of the conveyor can negatively affect the capacity of the conveyor. All start / stop applications must use a soft start mechanism such as a Frequency Inverter with a 1 second acceleration cycle. | |
| **Application Condition** | **Start / Stop Factor** |
| Continuous Run or 1 start/stop per hour | 1.0 |
| Maximum 10 starts/stop per hour | 0.83 |
| Maximum 30 starts/stop per hour | 0.70 |
| Greater than 30 starts/stop per hour | 0.62 |

## Servo Motor / Control Torque Curves

### Motor Only with 115V Control

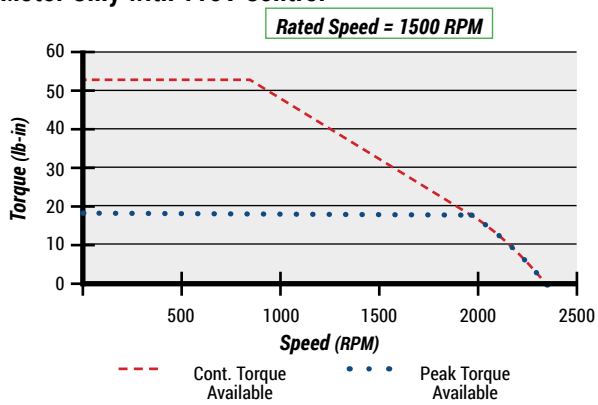


### Motor Only with 230V Control

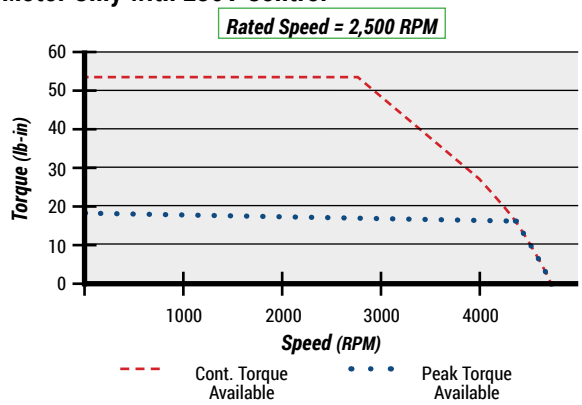


## Servo Performance Data

**Accuracy:**

- 2200 Series: Index consistency = ±0.040 in

**Maximum Speed (Velocity):**

- 2200 Series: 300 ft/min = 60 in/sec

**Maximum Acceleration Rate:** 200 in/sec/sec

**Maximum Deceleration Rate:** 400 in/sec/sec

**Maximum Index Rate:** 100 indexes per minute (0.6 sec total cycle; 0.2 sec accel, 0.2 sec dwell, 0.2 sec decel)

### Minimum Distance for Slow Down / Deceleration

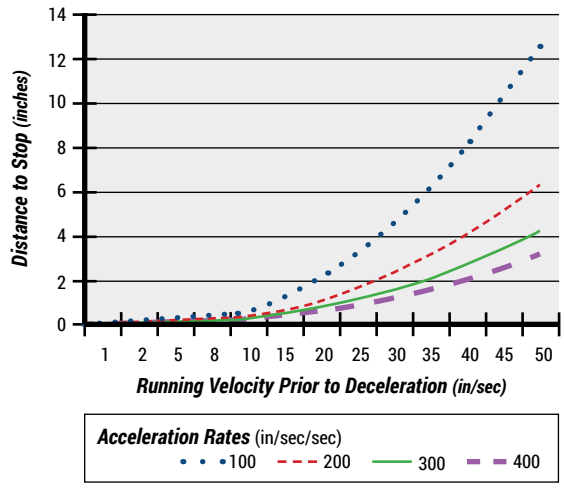


### Minimum Distance for Speed Up / Acceleration

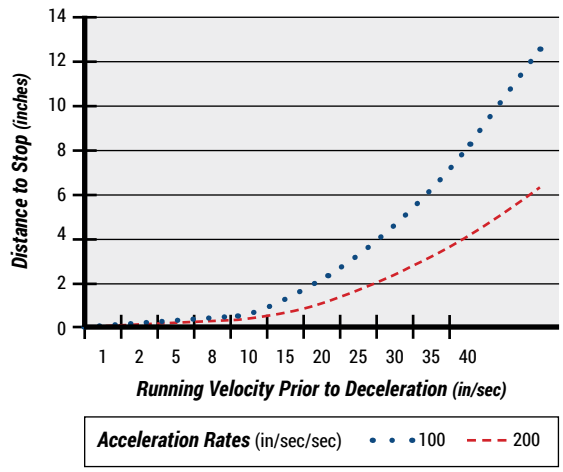


*Due to the wide variety of conveyor and stand options along with possible configurations, stability of the final setup is the responsibility of the end user.*

# 2200/2700 SERIES

## 2200 & 2700 Series Conveyors are best for:

- Small to Medium Part Handling
- Transfers
- Accumulation
- Precision Part Movement
- Part Incline/Decline Routing (Z Frames)
- Positioning
- Automated and Manual Assembly

## Sizes & Measurements

- 25 - 914 mm (1 - 36 in) widths
- 457 - 9144 mm (18 in - 30 ft) lengths

## Loads & Speeds

- Up to 68 kg (150 lbs)
- Up to 122 mpm (400 fpm)

## Conveyor Configurations

Straight

Z-Frame

2700 Series

Horizontal to Incline

Nose-Over

## Industrial

## Flexible Chain

## Pallet Systems

## Sanitary Stainless Steel

## Engineered Solutions Group

Custom engineered solutions for almost any application.

## CAD Configurator Tool

Industry leading tool! Configure your own custom conveyor in minutes.

# TRANSFORMING CONVEYOR AUTOMATION


### Contact Dorner

**United States**
+1-262-367-7600

**Canada**
+1-289-208-7306

**Mexico**
+52.33.30037400

**Germany**
+49 (0) 2461/93767-0

**France**
+33 (0)1 84 73 24 27

**Malaysia**
+604-626-2948

DORNER®
By Columbus McKinnon

DORNERCONVEYORS.COM


CONVEYANCE SOLUTIONS

CMCO INTELLIGENT MOTION · DORNER · GARVEY · MAGNETEK · montratec

© Dorner Mfg. Corp. 2026. All Rights Reserved.

851-803 1026