Single Support Structure with enclosure beam
FK, FS, FM, FC

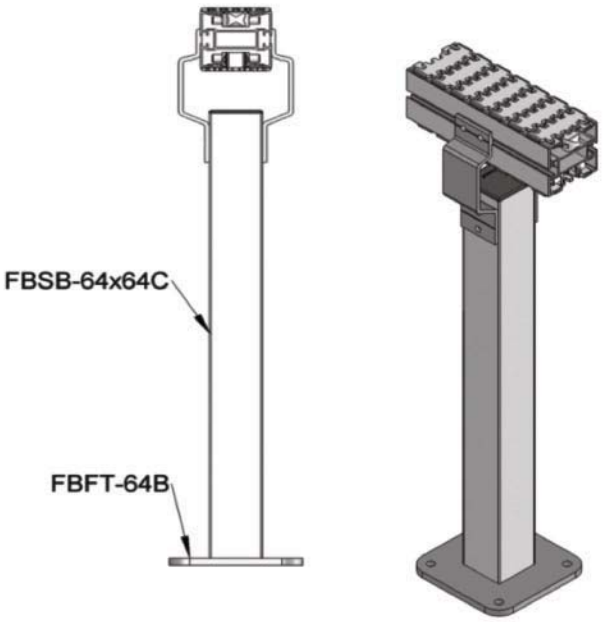

Double Lane Support Structure
FK, FS, FM, FC, FL

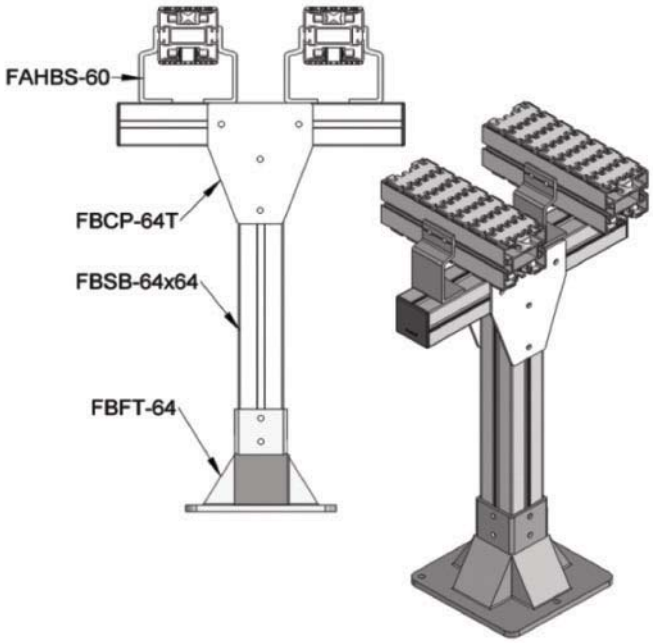

Single Support Structure
FL

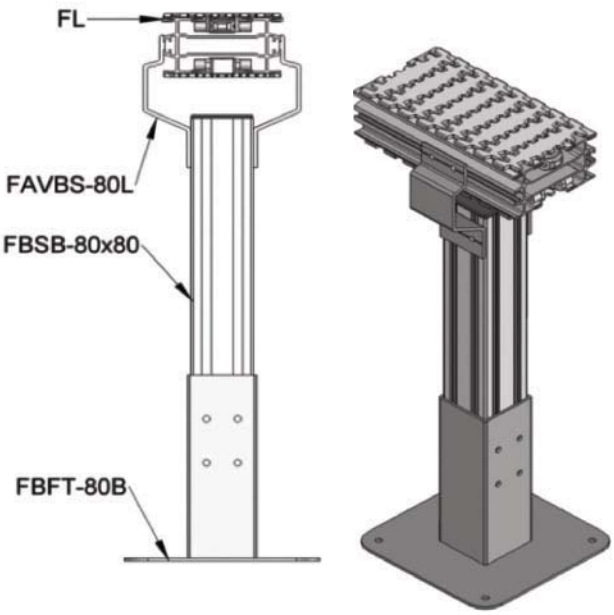

Alpine Support Structure
FK, FS, FM, FC, FL

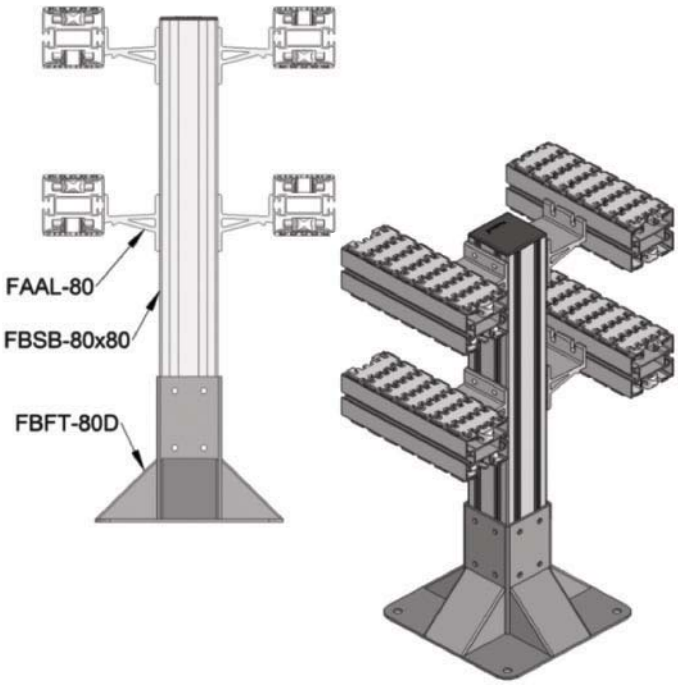

Double Support Structure **FK, FS, FM, FC**

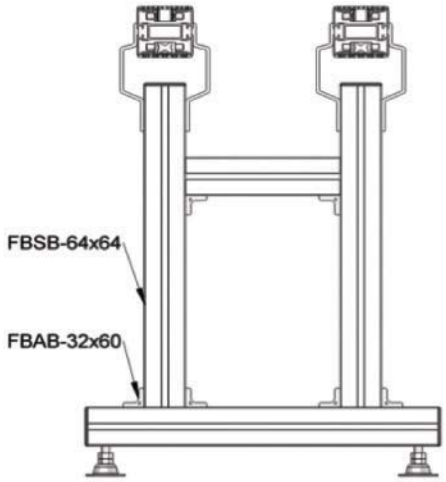

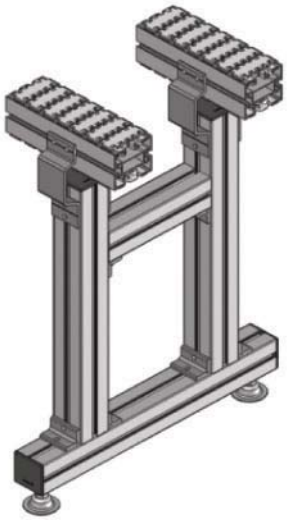

Multi Lane Support Structure **FK, FS, FM, FC, FL**

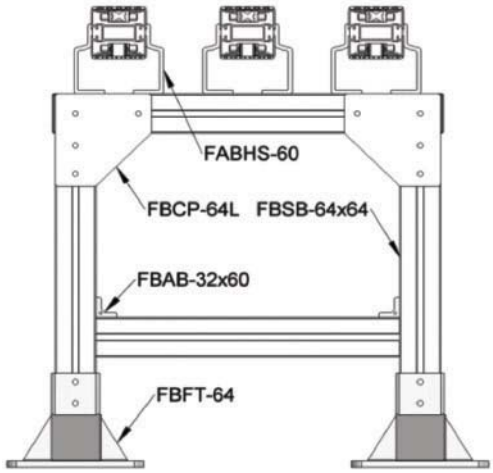

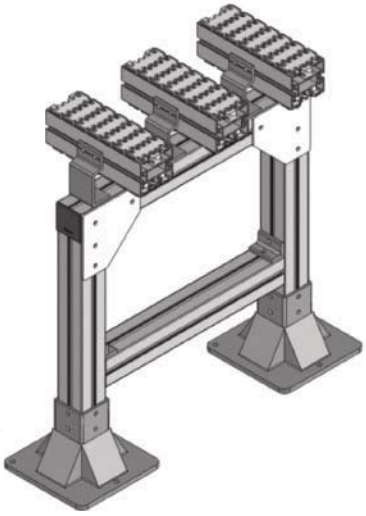

Double Support Structure **FK, FS, FM, FC**

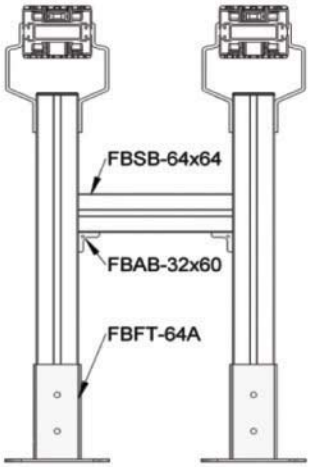

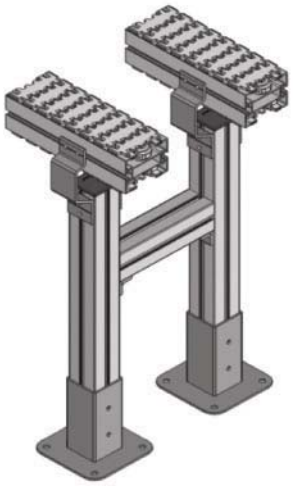

Multi Lane Double Layer Support Structure **FK, FS, FM, FC, FL**

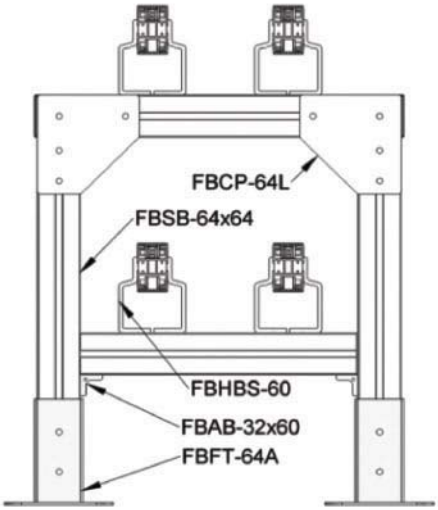

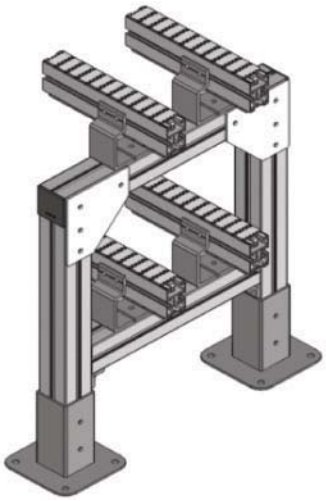

Ceiling Hanger Support Structure **FK, FS, FM, FC, FL**

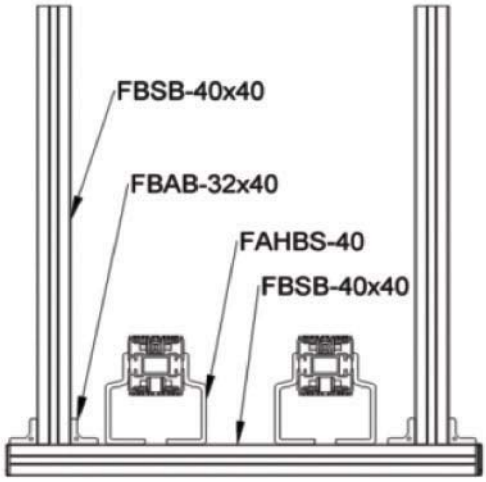

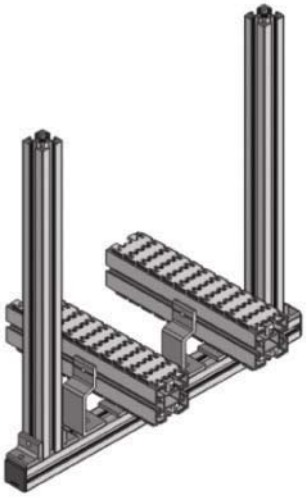

Wall Mount Support Structure **FK, FS, FM, FC**

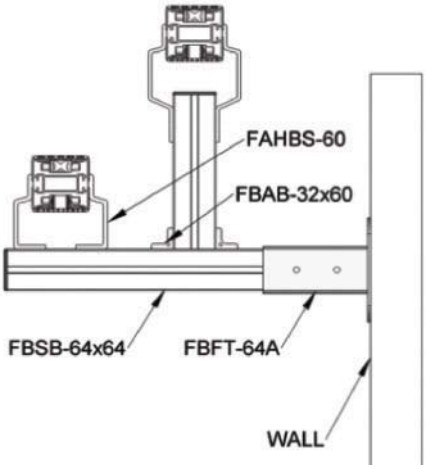

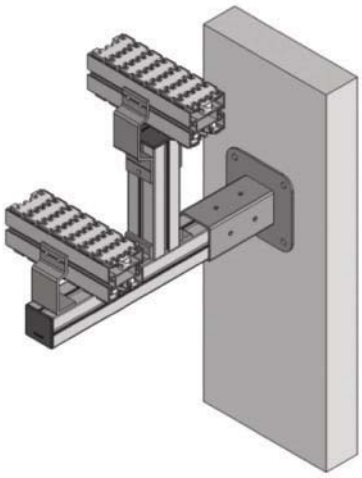

FBSB-40x40

Support Beam 40x40 – Aluminum Anodized

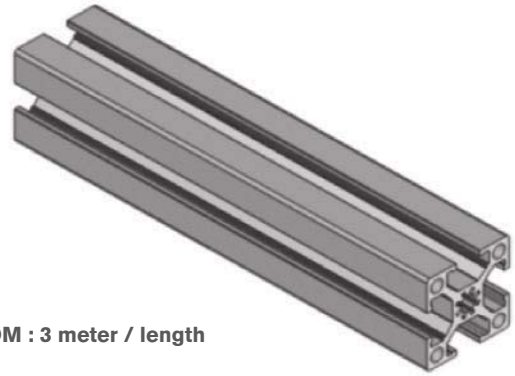

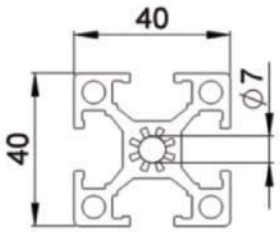

UOM : 3 meter / length

FBSB-64x64

Support Beam 64x64 – Aluminum Anodized

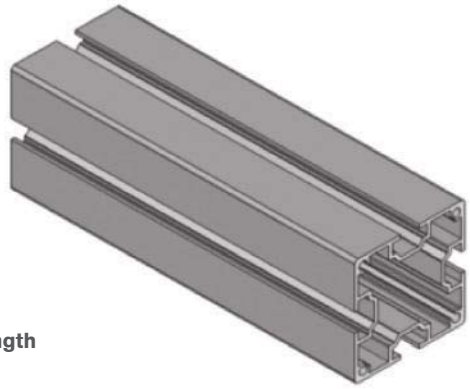

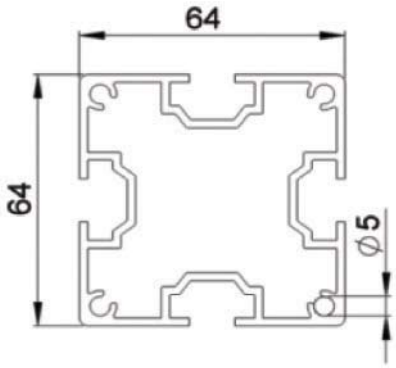

UOM : 3 meter / length

FBSB-64x64C

Close slot Support Beam – Aluminum Anodized

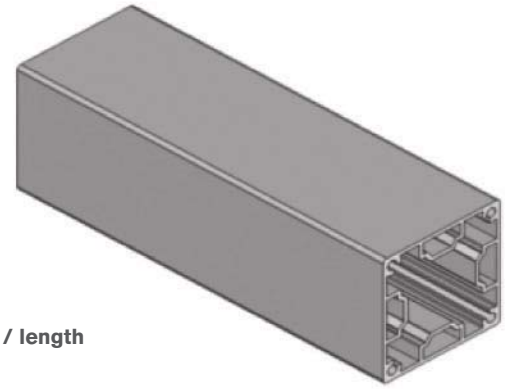

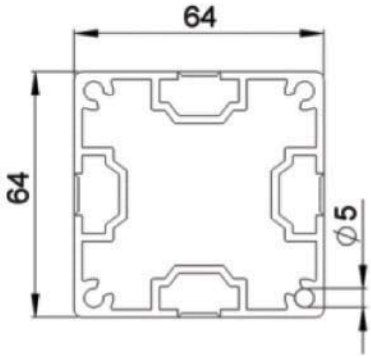

UOM : 3 meter / length

FBSB-80x80

Support Beam 80x80 – Aluminum Anodized

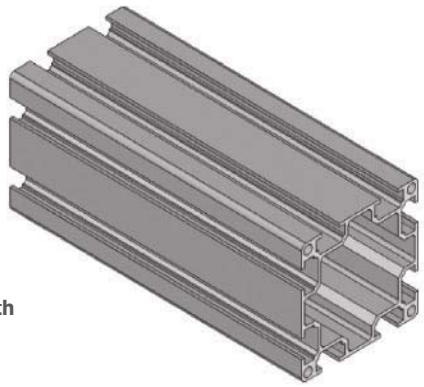

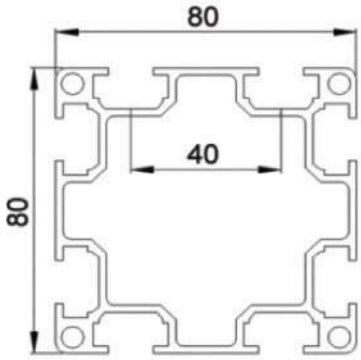

UOM : 3 meter / length

FBSB-40x80

Support Beam – Aluminum Anodized

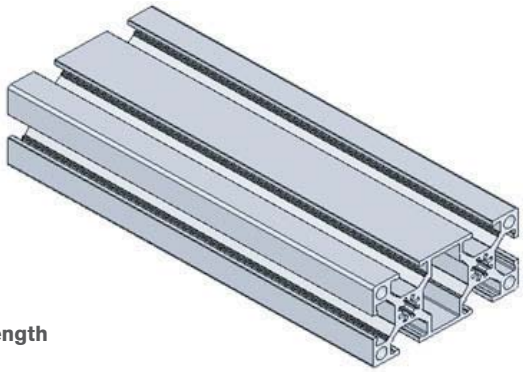

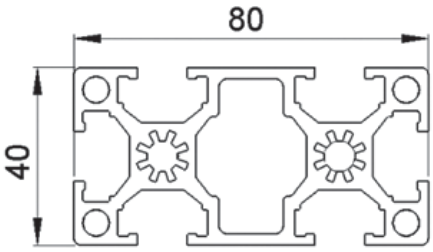

UOM : 3 meter / length

FBSB-40x80C

Close Slot Support Beam - Aluminum Anodized

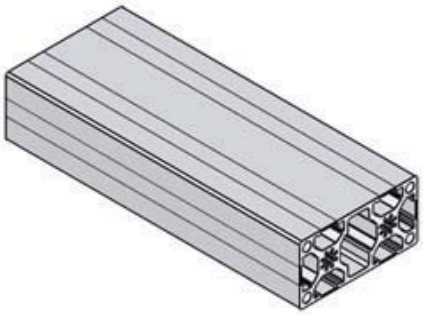

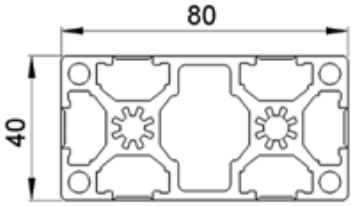

UOM : 3 meter / length

FBEC-40x80

End Cap. 40x80mm Support Beam - Polyamide

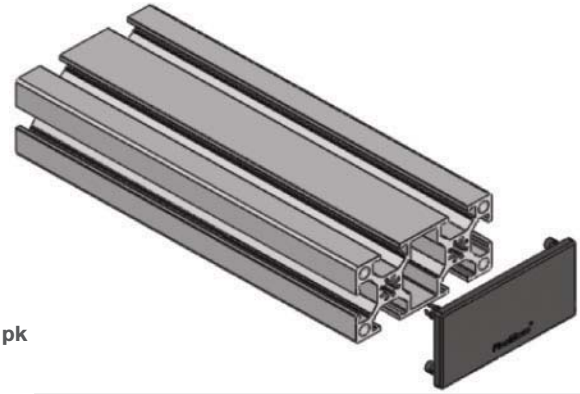

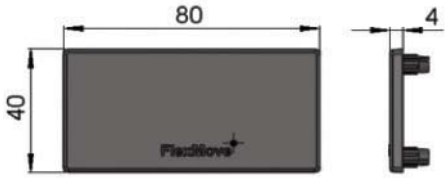

UOM : 10 pcs / pk

FBEC-40

End Cap , 40x40mm Support Beam - Polyamide

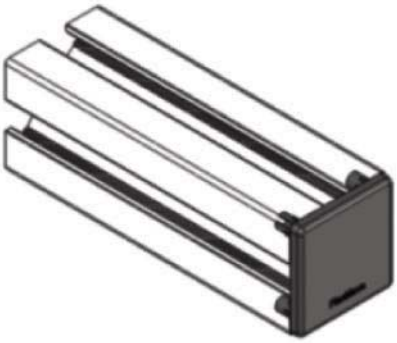

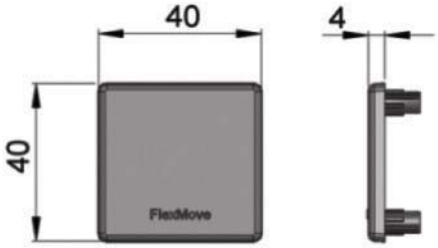

UOM : 10 pcs / pk

FBEC-64

End cap , 64x64mm Support Beam - Polyamide

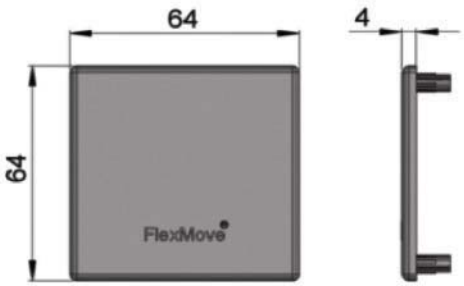

UOM : 10 pcs / pk

FBEC-80

End cap , 80x80mm Support Beam - Polyamide

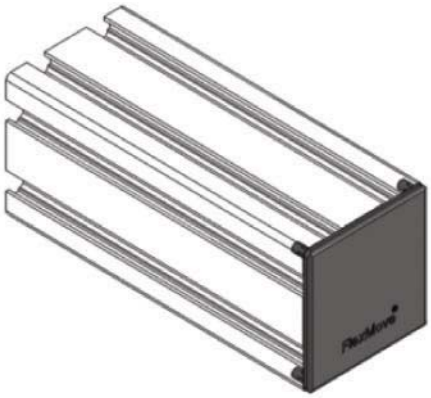

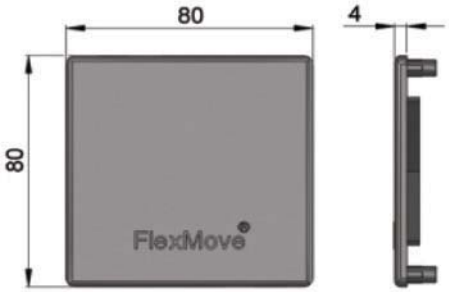

UOM : 10 pcs / pk

FBFT-64

Foot For Support Beam 64x64 – Aluminum Die Cast

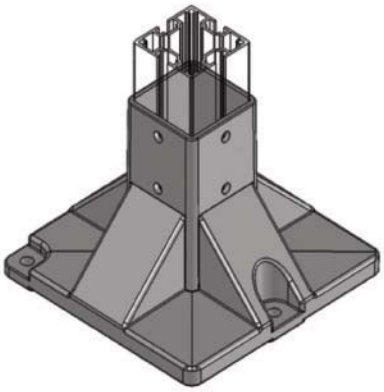

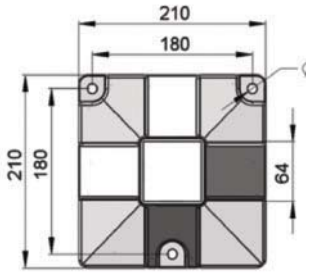

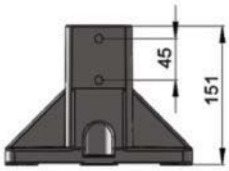

UOM : pc

Mounting : FAHB-M8 x16(4) , FBCS – 20x76 (2) , FAFW-M8 (4) , FAWP-M10 (3)

FBFT-64A

Foot For Support Beam 64x64 – Steel, Powder Coating

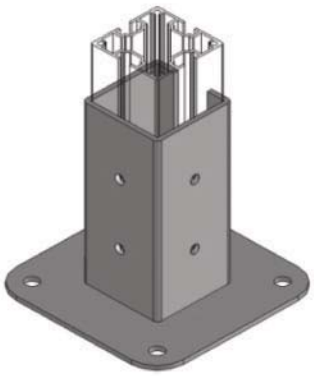

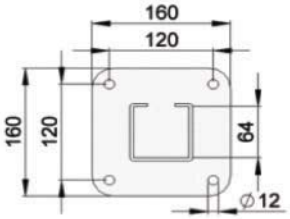

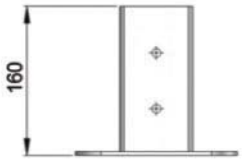

UOM : pc

Mounting : FAHB-M8 x16(4) , FASN – M8 (4) , FAFW-M8 (4) , FAWP-M10(4)

FBFT-64B

Foot For Support Beam 64x64 – Aluminum

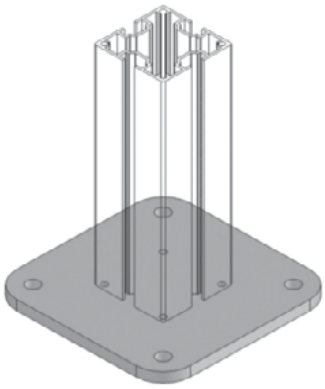

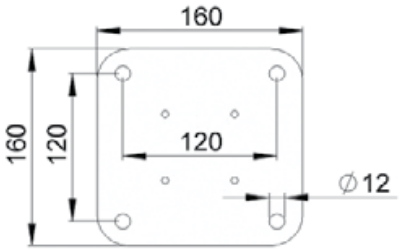

UOM : pc

Mounting : FACS-M6 x 20 (4) , FAWP-M10 (4)

FBCS-20x76

Connecting Strip For Foot – Steel, Electro Zinc Plated

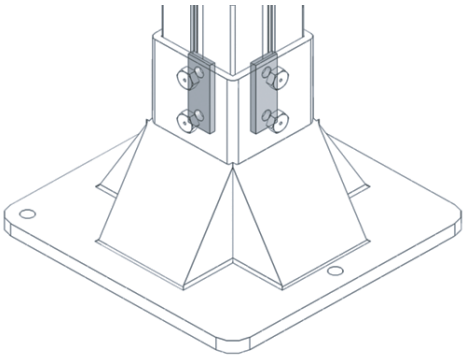

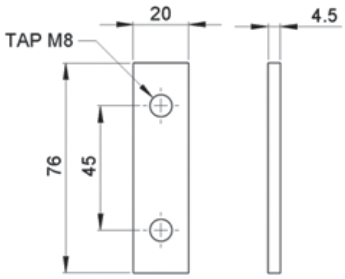

UOM : 10pcs / pk

FBCS-20x96

Connecting Strip For Foot 80x80mm– Steel, Electro Zinc Plated

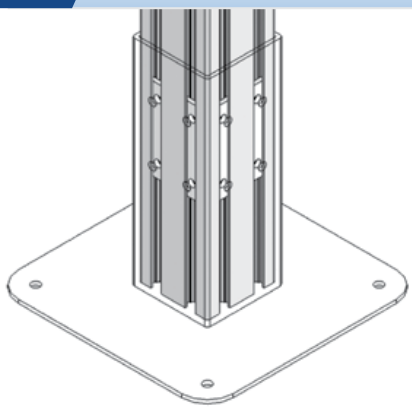

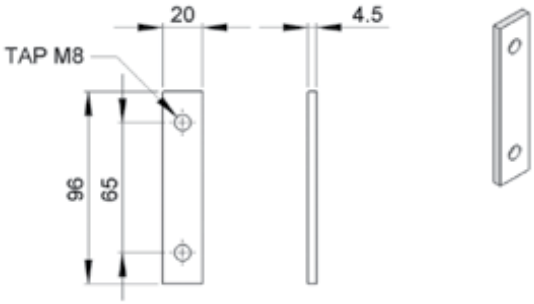

UOM : pc

FBFT-64TP

Tripod Foot For FBSB-64x64 - Polyamide , Glass Fiber reinforced

Plastic Pad, screws and clamps included

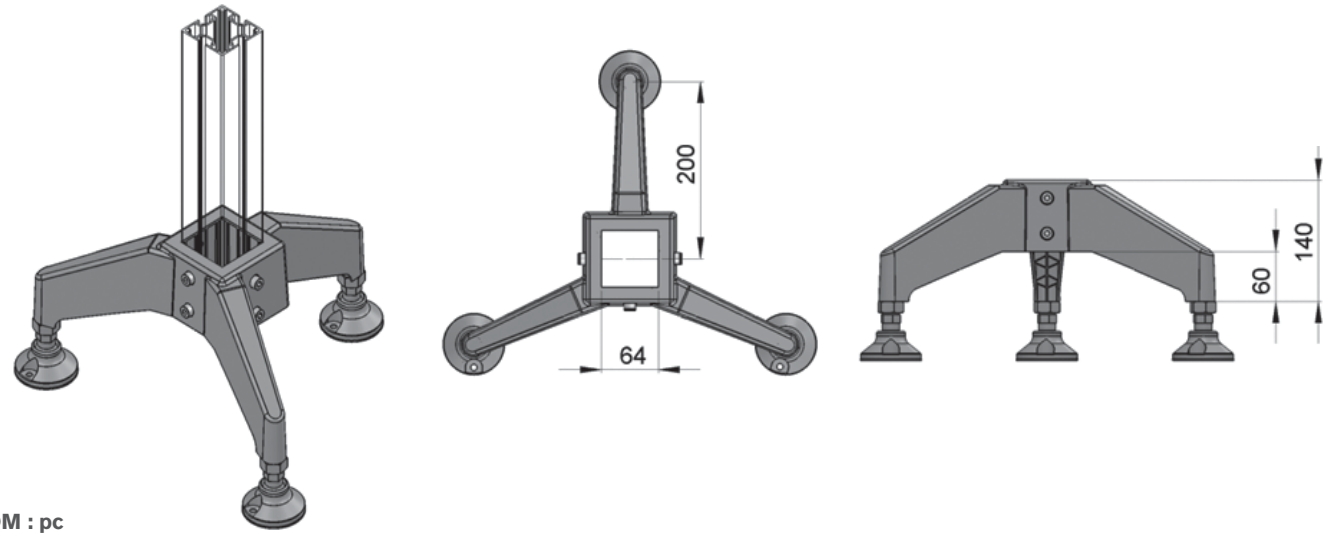

UOM : pc

FBFT-64BP

Bipod Foot For FBSB-64x64 - Polyamide , Glass Fiber reinforced

Plastic Pad, screws and clamps included

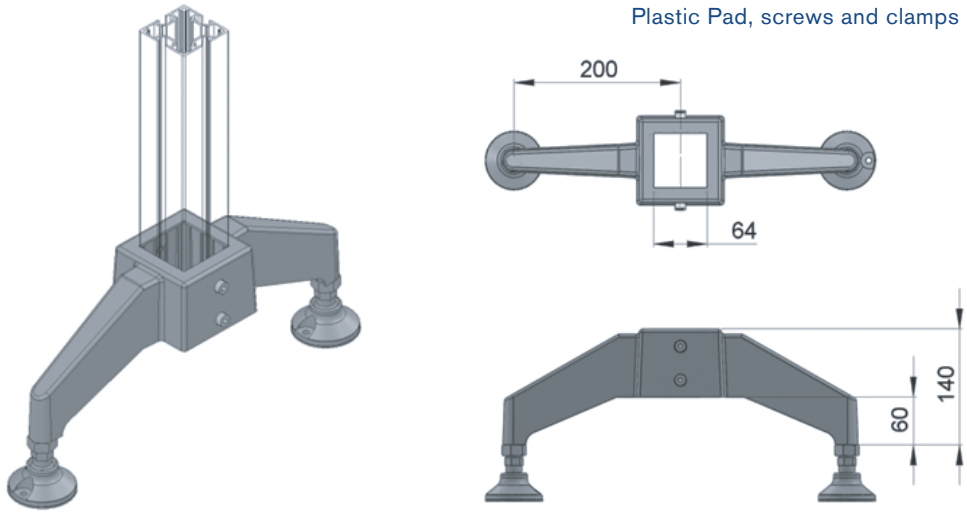

UOM : pc

FBFT-80TP

Tripod Foot For FBSB-80x80 - Polyamide, Glass Fiber reinforced

Plastic Pad, screws and clamps included

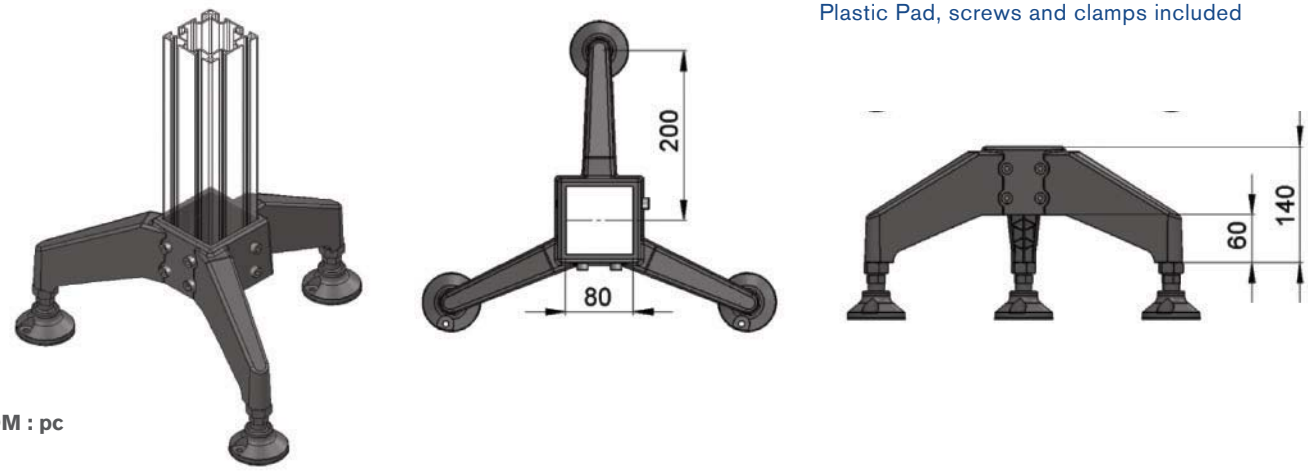

UOM : pc

FBFT-80BP	Bipod Foot For FBSB-80x80 - Polyamide , Glass Fiber reinforced

Plastic Pad, screws and clamps included

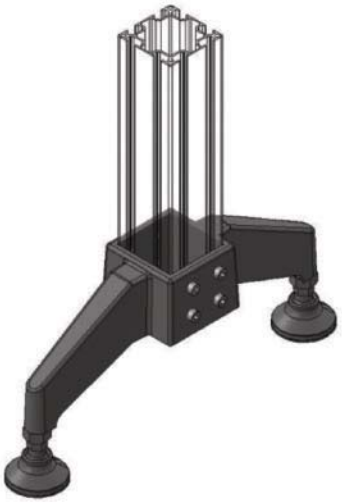

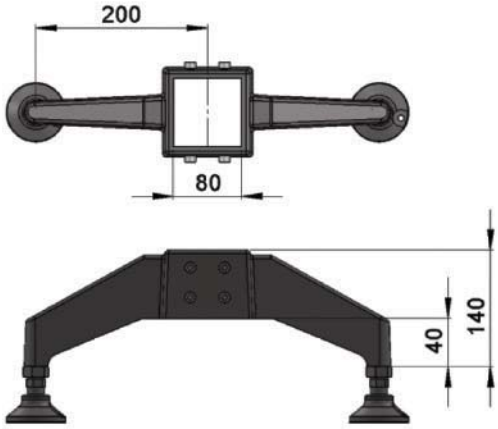

UOM : pc

FBFT-64xM8	End Plate for Support Beam 64x64- Aluminum & Adjustable stand - D=M8, L=50 – Zinc Plated
FBFT-64xM10	End Plate for Support Beam 64x64- Aluminum & Adjustable stand - D=M10, L=75 – Zinc Plated
FBFT-64xM12	End Plate for Support Beam 64x64- Aluminum & Adjustable stand - D=M12, L=75 – Zinc Plated
FBFT-64xM8S	End Plate for Support Beam 64x64- Aluminum & Adjustable stand - D=M8, L=50 – Stainless Steel
FBFT-64xM10S	End Plate for Support Beam 64x64- Aluminum & Adjustable stand - D=M10, L=75 – Stainless Steel
FBFT-64xM12S	End Plate for Support Beam 64x64- Aluminum & Adjustable stand - D=M12, L=75 – Stainless Steel

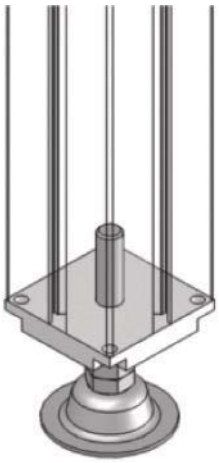

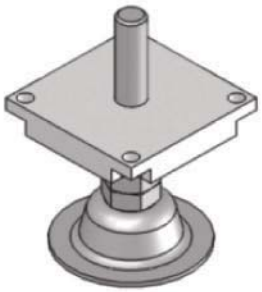

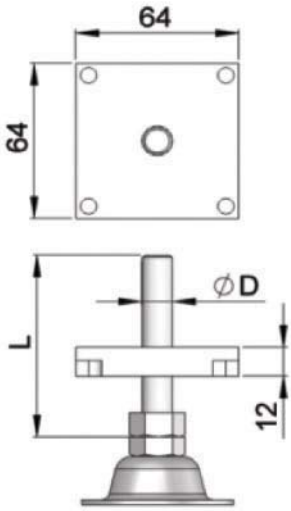

UOM : pc

FBFT-170 — Floor Attachment Bracket – Steel, Zinc Plated

FBFT-170S — Floor Attachment Bracket – Stainless Steel

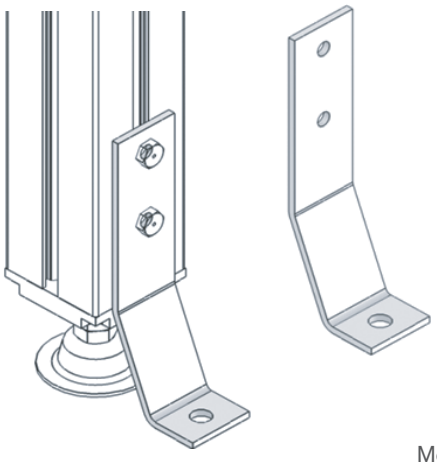

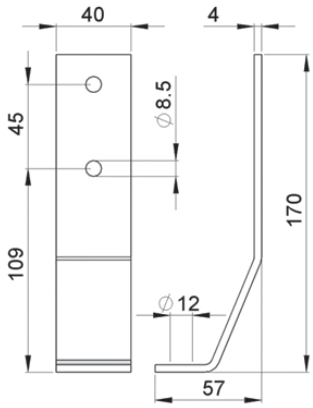

UOM : pc

Mounting : FAHB-M8 x16(2) , FASN-M8 (2) , FAFW-M8 (3) , FAWP-M10 (1)

FBFT-80A — Foot For Support Beam 80x80 – Steel, Powder Coating

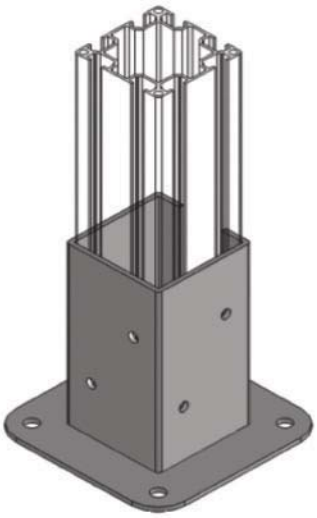

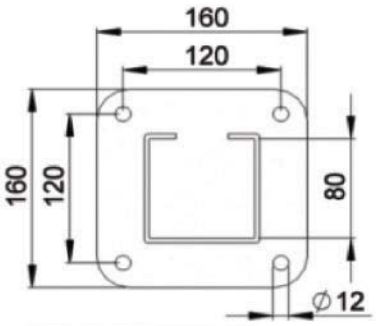

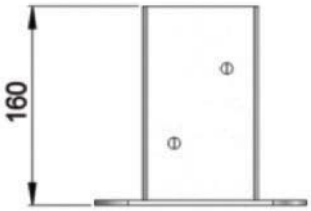

UOM : pc

Mounting : FAHB-M8 x16(4) , FASN-M8 (4) , FAFW-M8 (4) , FAWP-M10 (4)

FBFT-80B — Foot For Support Beam 80x80 – Steel, Powder Coating

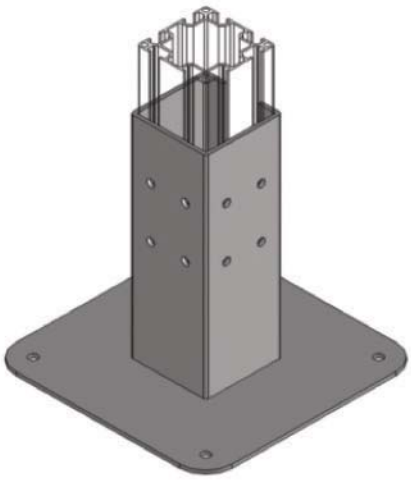

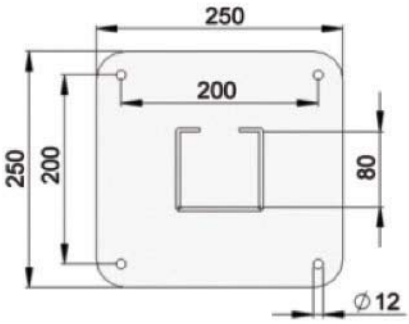

UOM : pc

Mounting : FAHB-M8 x16(8) , FBCS – 20 x 96 (4), FAFW-M8 (8) , FAWP-M10(4)

FBFT-80C

Foot For Support Beam 80x80 – Steel, Powder coating

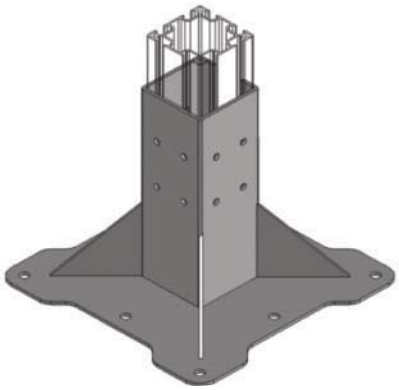

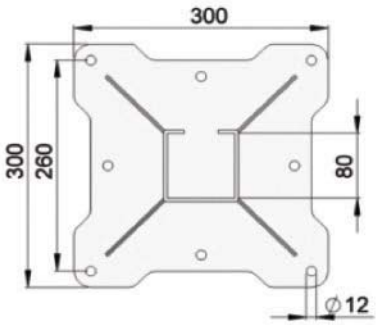

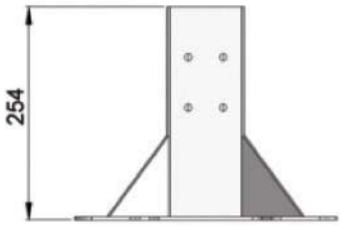

UOM : pc

Mounting : FAHB-M8 x16(8) , FBCS – 20 x 96 (4) , FAFW-M8 (8) , FAWP-M10 (4)

FBFT-80D

Foot For Support Beam 80x80 – Steel, Powder Coating

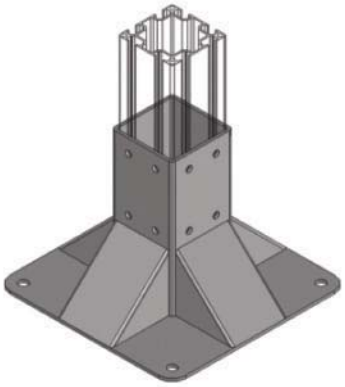

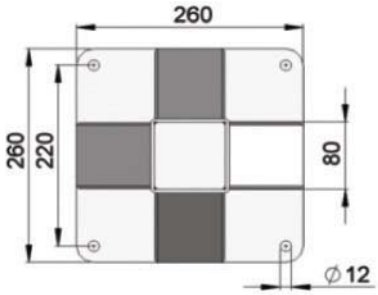

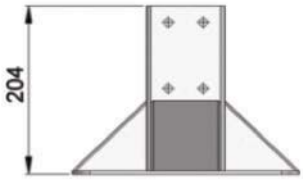

UOM : pc

Mounting : FAHB-M8 x16(8) , FBCS – 20 x 96 (4) , FAFW-M8 (8) , FAWP-M10 (4)

FBCP-40T

T Connecting Plate for Support Beam 40x40- Steel, Zinc Plated

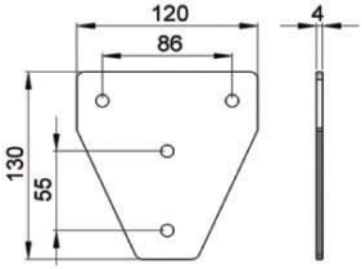

UOM : pc

Mounting : FAHB-M8 x16(4) , FASN-M8 (4) , FAFW-M8 (4)

FBCP-40L

L Connecting Plate for Support Beam 40x40- Steel, Zinc Plated

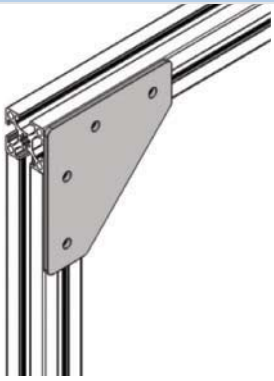

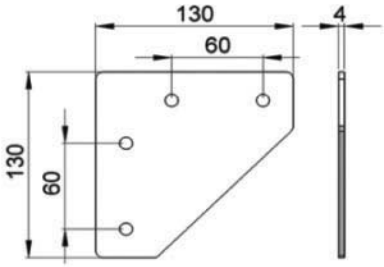

UOM : pc

Mounting : FAHB-M8 x16(4) , FASN-M8 (4) , FAFW-M8 (4)

FBCP-64T

T connecting Plate for Support Beam 64x64 – Steel, Zinc Plated

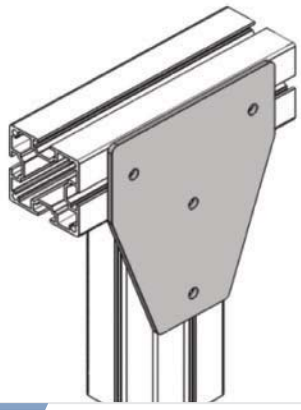

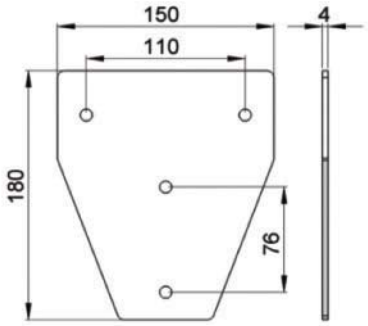

UOM : pc

Mounting : FAHB-M8 x16(4) , FASN-M8 (4) , FAFW-M8 (4)

FBCP-64L

L Connecting Plate for Support Beam 64x64- Steel, Zinc Plated

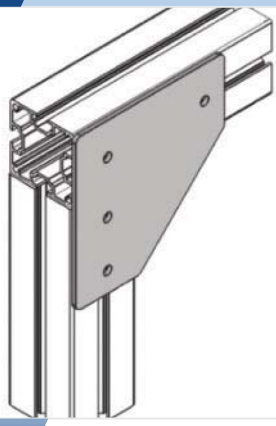

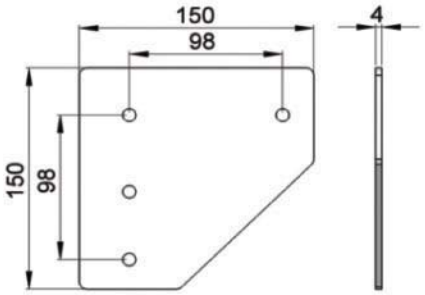

UOM : pc

Mounting : FAHB-M8 x16(4) , FASN-M8 (4) , FAFW-M8 (4)

FBCP-80T

T connecting Plate for Support Beam 80x80 – Steel, Zinc Plated

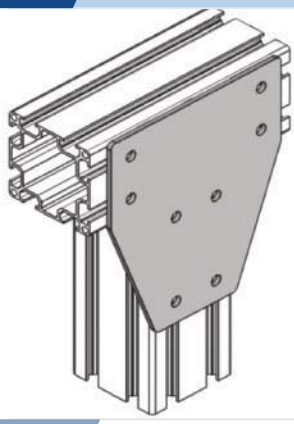

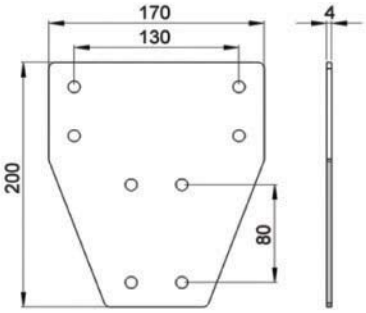

UOM : pc

Mounting : FAHB-M8 x16(8) , FASN-M8 (8) , FAFW-M8 (8)

FBCP-80L

L Connecting Plate for Support Beam 80x80- Steel, Zinc Plated

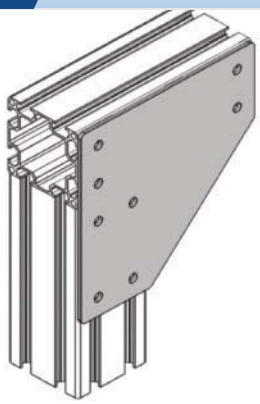

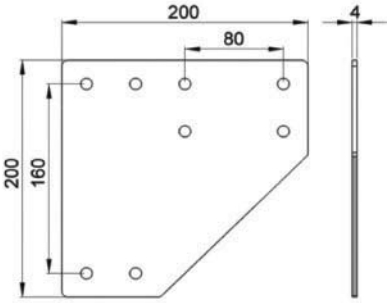

UOM : pc

Mounting : FAHB-M8 x16(8) , FASN-M8 (8) , FAFW-M8 (8)

FBCP-40V

45 ° connecting Plate for Support Beam 40x40 – Steel, Zinc Plated

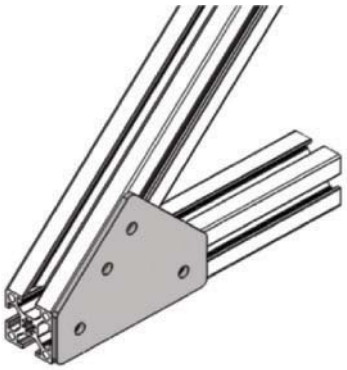

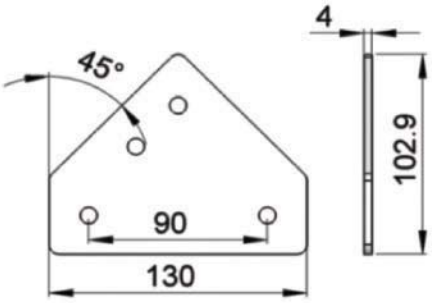

UOM : pc

Mounting : FAHB-M8 x16(4) , FASN-M8 (4) , FAFW-M8 (4)

FBCP-64V

45 ° connecting Plate for Support Beam 64x64 – Steel, Zinc Plated

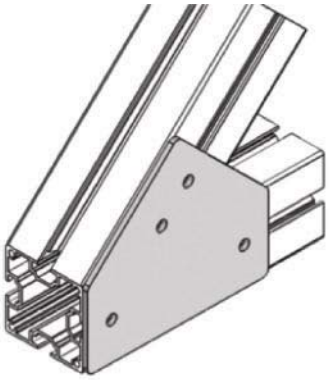

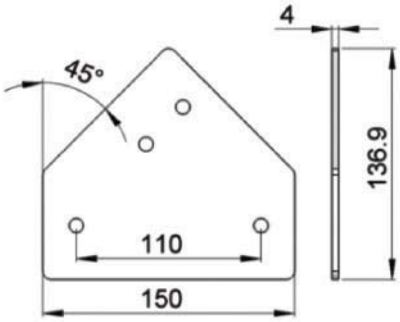

UOM : pc

Mounting : FAHB-M8 x16(4) , FASN-M8 (4) , FAFW-M8 (4)

FBCP-80V

45 ° connecting Plate for Support Beam 80x80 – Steel, Zinc Plated

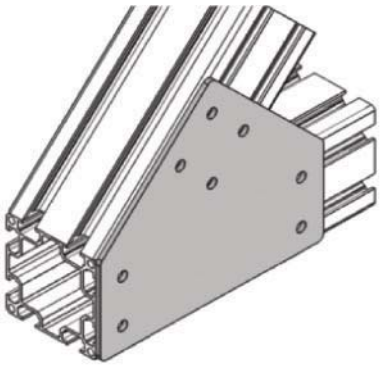

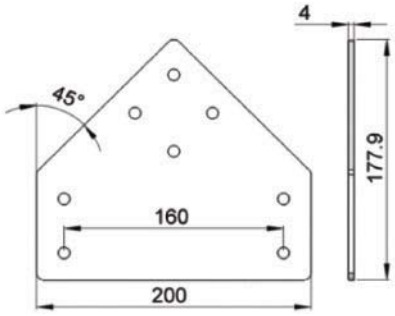

UOM : pc

Mounting : FAHB-M8 x16(8) , FASN-M8 (8) , FAFW-M8 (8)

FBRX-20A

90° Inner Joint Strip – Steel, Zinc Plated

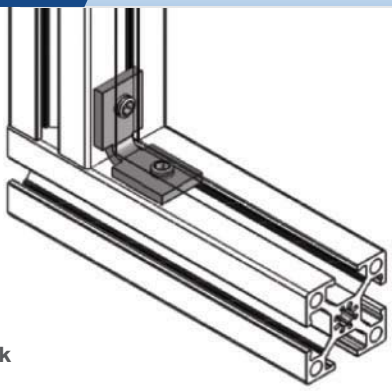

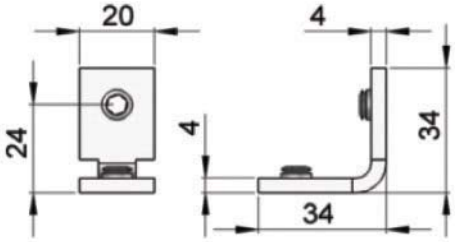

UOM : 10 pcs / pk

FBRX-20B

90° Outer Joint Strip – Steel, Zinc Plated

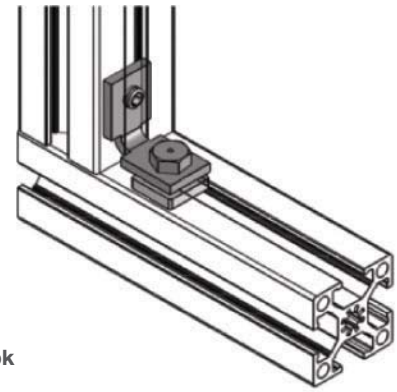

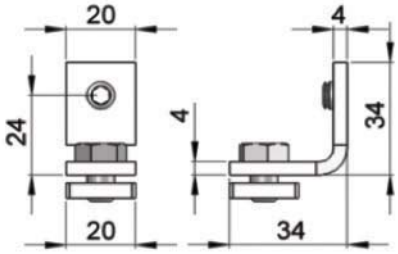

UOM : 10 pcs / pk

FBRX-20C

90° Inner Joint Strip – Steel, Zinc Plated

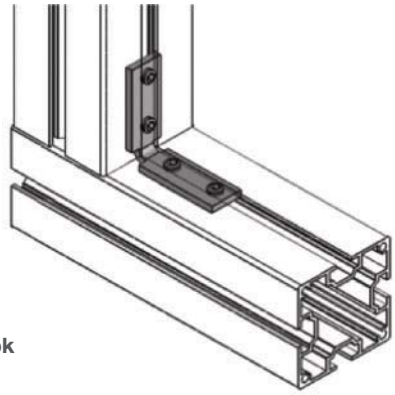

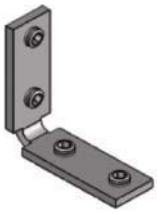

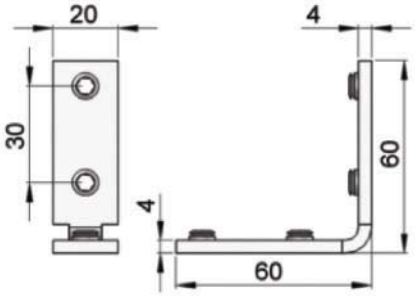

UOM : 10 pcs / pk

FBAB-40x40

Angle Bracket for Support Beam 40x40 - Aluminum

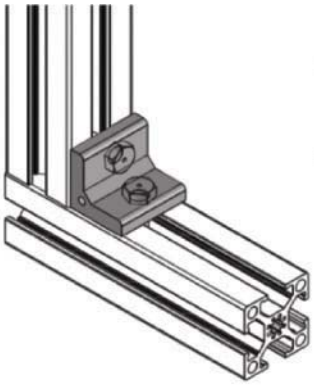

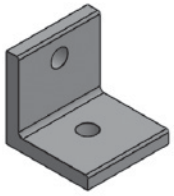

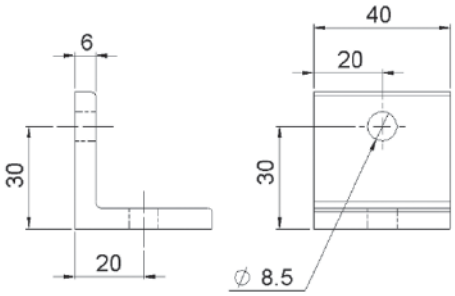

UOM : pc

Mounting : FAHB-M8 x20(2) , FASN-M8 (2) , FAFW-M8 (2)

FBAB-32x60

Angle Bracket for Support Beam 64x64 - Aluminum

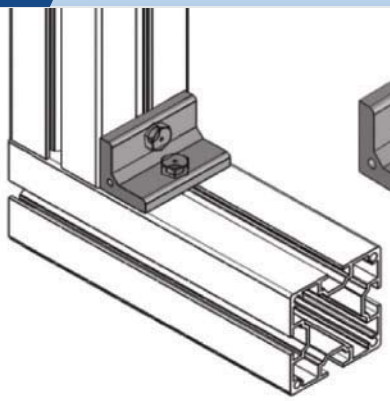

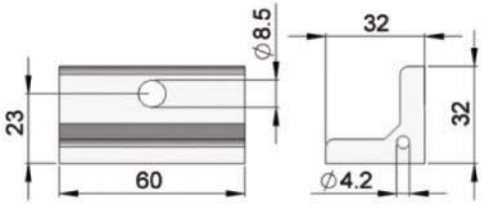

UOM : pc

Mounting : FAHB-M8 x20 (2) , FASN-M8 (2) , FAFW-M8 (2)

FBAB-32x80

Angle Bracket for Support Beam 80x80 - Aluminum

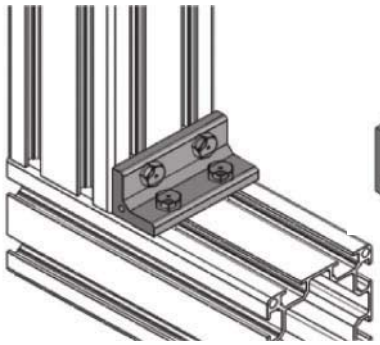

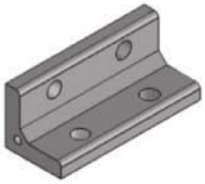

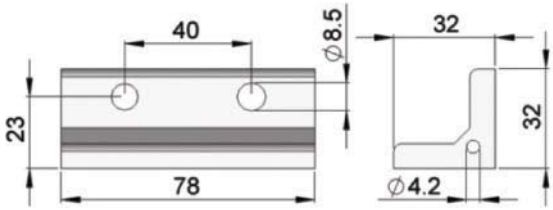

UOM : pc

Mounting : FAHB-M8 x20 (4) , FASN-M8 (4) , FAFW-M8 (4)

FBAB-40L

Angle Bracket for Support Beam 40x40 - Aluminum

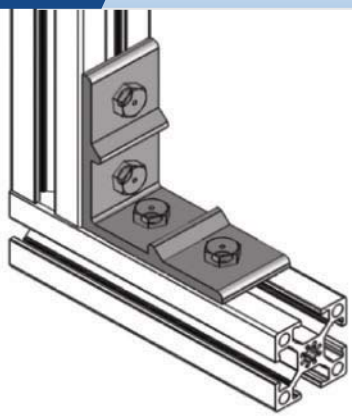

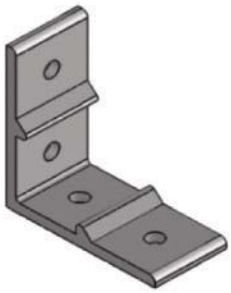

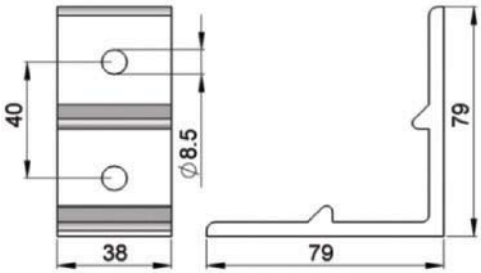

UOM : pc

Mounting : FAHB-M8 x 16 (4) , FASN-M8 (4) , FAFW-M8 (4)

FBAB-60L

Angle Bracket for Support Beam 64x64 - Aluminum

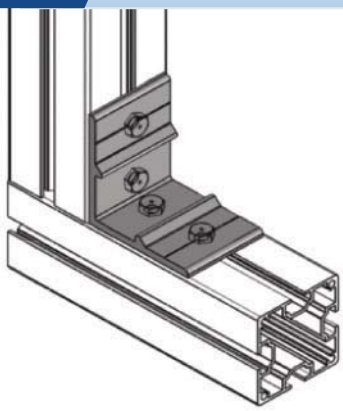

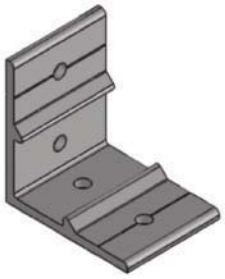

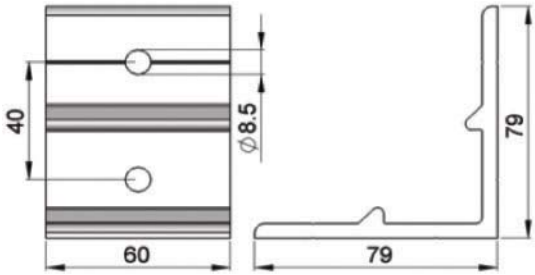

UOM : pc

Mounting : FAHB-M8 x 16 (4) , FASN-M8 (4) , FAFW-M8 (4)

FBAB-80L

Angle Bracket for Support Beam 80x80 - Aluminum

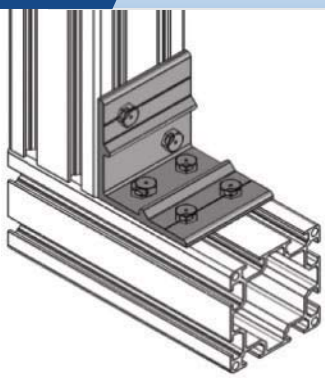

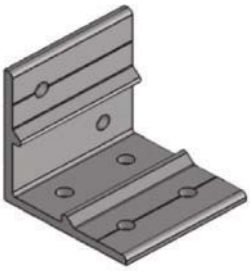

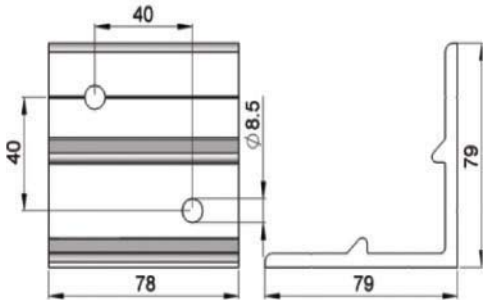

UOM : pc

Mounting : FAHB-M8 x 16 (6) , FASN-M8 (6) , FAFW-M8 (6)

FBAB-40x80A

Angle Bracket for Support Beam 40x40, 64x64, 40x80 - Aluminum Die Cast

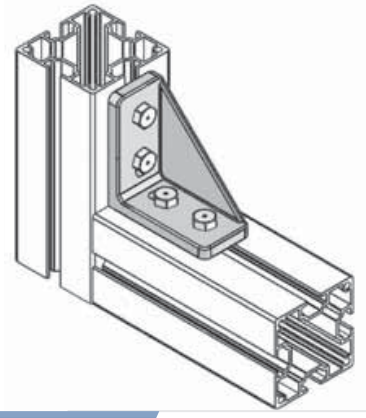

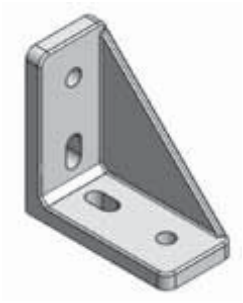

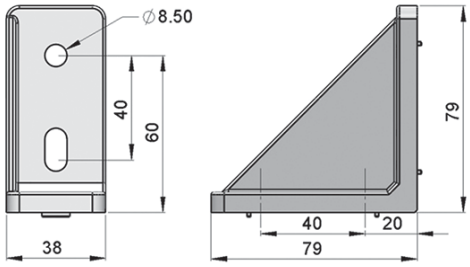

UOM : pc

Mounting : FAHB-M8 x 20 (4) , FASN-M8 (4) , FAFW-M8 (4)

FBAB-40x40A

Angle Bracket for Support Beam 40x40 - Aluminum Die Cast

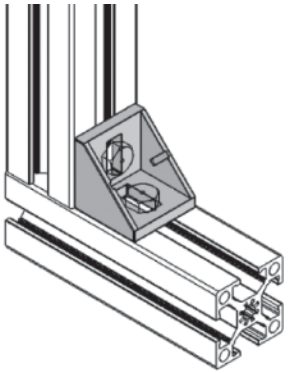

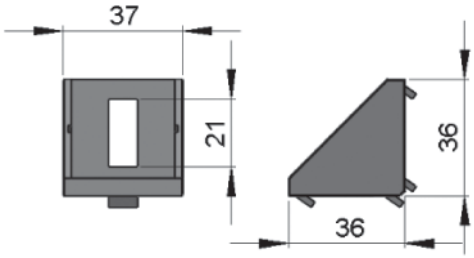

UOM : pc

FBAB-64x64A

Angle Bracket for Support Beam 64x64 - Aluminum Die Cast

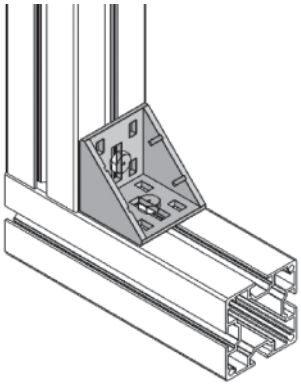

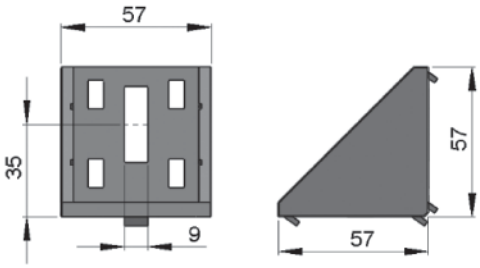

UOM : pc

Mounting : FAHB-M8 x20(2) , FASN-M8 (2) , FAFW-M8 (2)

FBAB-80x80A

Angle Bracket for Support Beam 80x80 - Aluminum Die Cast

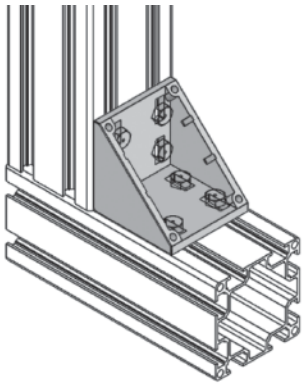

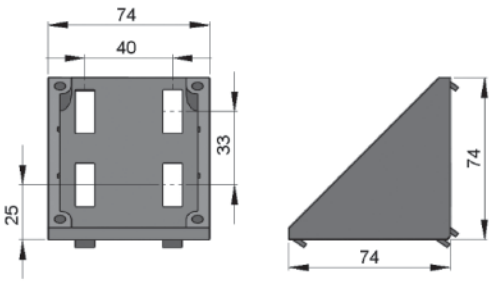

UOM : pc

Mounting : FAHB-M8 x20 (2) , FASN-M8 (2) , FAFW-M8 (2)

FBEC-40x40A

End Cap for FBAB-40x40A angle bracket - Polyamide

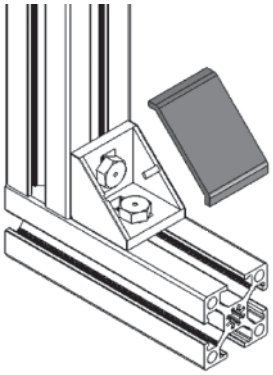

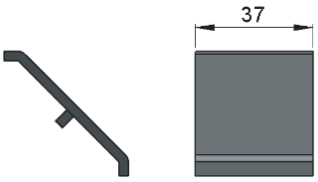

UOM : pc

FBEC-64x64A

End Cap for FBAB-64x64A angle bracket - Polyamide

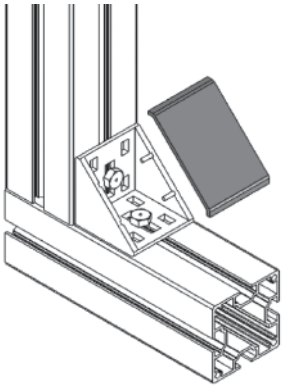

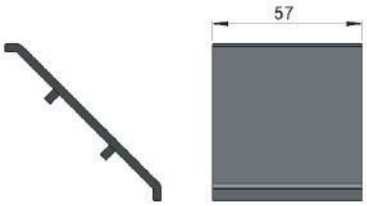

UOM : pc

FBEC-80x80A

End Cap for FBAB-80x80A angle bracket - Polyamide

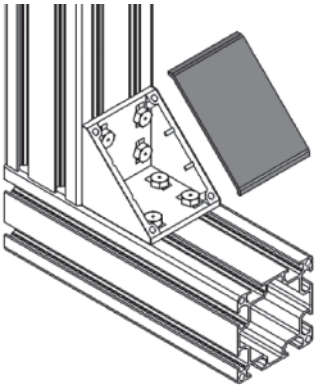

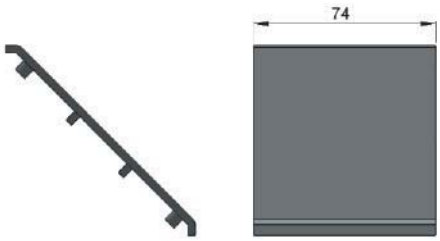

UOM : pc