ENGINEERING MANUAL

Complex Configurations & Tight Spaces

Ideal for Corrosion Resistant Applications

Reduces Conveyor Footprint

Capable of Curves, Inclines & Declines

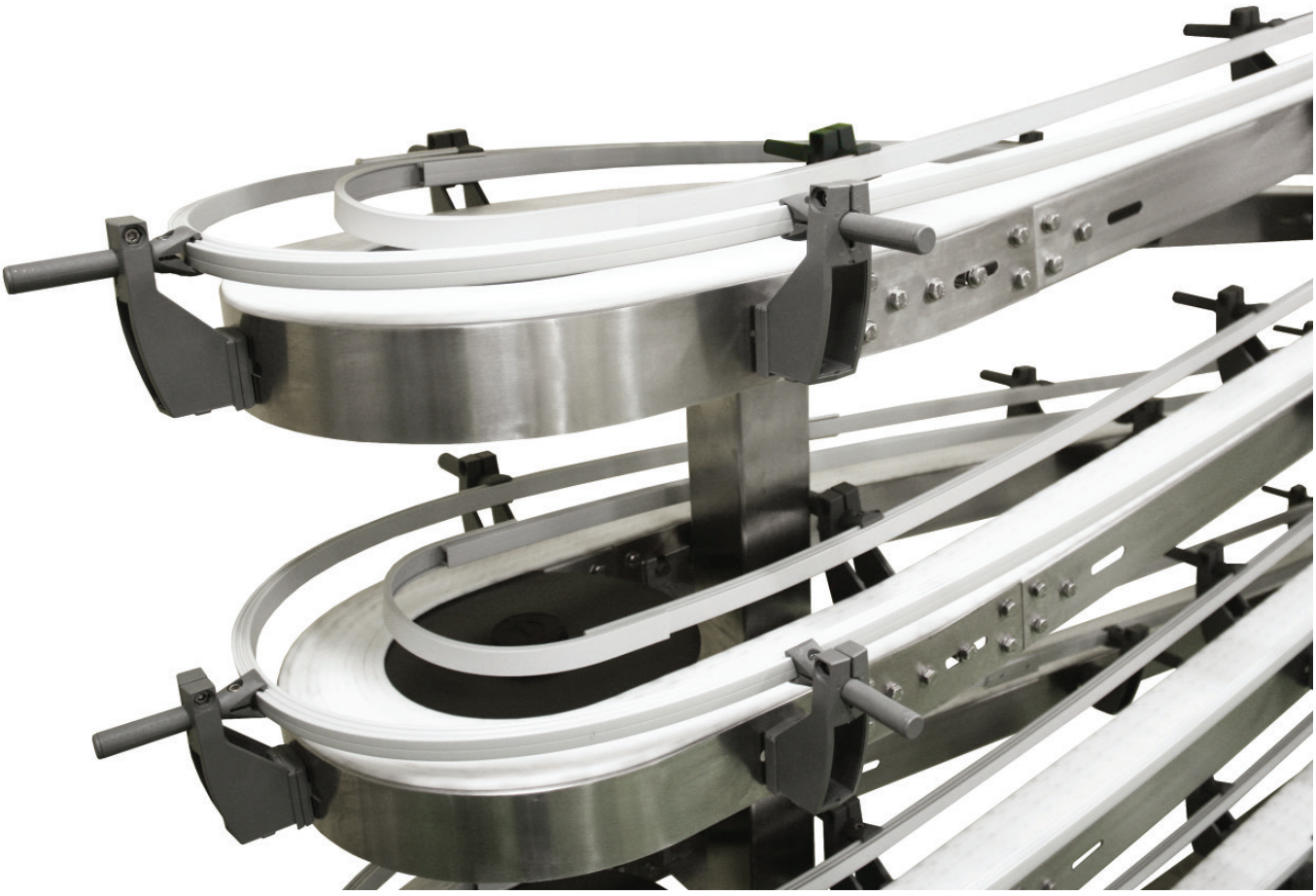

FlexMove® STAINLESS SERIES

High Performance, Stainless Steel, Flexible Chain Conveyors

DORNER®

WHEEL CORNERS
ELIMINATE CORNER FRICTION ALLOWING MULTIPLE CORNER CONFIGURATIONS

VERTICAL BENDS
FOR SMOOTH ELEVATION CHANGES AND EFFICIENT USE OF VERTICAL SPACE

TRANSFERS
FOR SMOOTH IN-LINE TRANSFER OF PRODUCT

STAINLESS STEEL FRAMEWORK
FOR CORROSION RESISTANT APPLICATIONS

MODULAR FRAMING
FOR FUTURE ADD-ON CAPABILITY AND PRODUCTION LINE CHANGES

SUPPORT POST
PROVIDE ADJUSTABLE HEIGHT WHILE OPTIMIZING THE USE OF FLOOR SPACE

Product Overview & How to Purchase ..... 4 – 5

Frame Widths ..... 6 – 7

MM 65mm Conveyor System ..... 8 – 18

MG 85mm Conveyor System ..... 19 – 29

M= 105mm Conveyor System ..... 30 – 39

MO 180 mm Conveyor System ..... 40 – 46

MP 260 mm Conveyor System ..... 47 – 53

M; Conveyor Accessories ..... 54 – 57

MA Conveyor Guides ..... 58 – 65

Gearmotors ..... 66 – 67

Controllers ..... 68 – 69

Technical Data & Calculations ..... 70 – 80

<[mq] Msmn_g M_f_] nci h

We provide a wide selection of chain sizes to cover a wide variety of product sizes and shapes. In order to select the right chain size to use in your application, consider the following selection criteria:

- **Jli ^o] n>cg _hmci hm**
  A product can be two or three times wider than the conveyor chain as long as the center of gravity of the product falls within the chain width. Extra supporting guide rails are required and testing is recommended.
- **Jli ^o] nQ_cabn**
  Product weight is important in chain selection as each chain has its maximum traction force. Traction force calculation is required when there are several heavy products to be conveyed, and it will increase further if the products are accumulated on the conveyor.
- **N_] bhq] [f = [f] of[nci h**
  It is important to calculate total load on conveyor based on product weight, distance between products, accumulation and length of the system. The frequency of start /stop, chain tension and service factor are important. If the calculated capacity is higher than the selected drive and chain series, the conveyor should be shortened or select a system with higher capacity.
- **Mg [ff@i i rj ldhn**
  Straightforward layout and compact design maximizes valuable floor space while minimizing noise, maintenance and footprint.

<_h^m

Bends are used to change the direction of chain movement in conveyors. There are 3 types of bends available:

- **Qb__f <_h^m**
  Designed with top and bottom wheels that rotate freely with the chain and are supported by a dual sealed ball bearing, providing the lowest friction, minimum bend force and smallest turning radius compared to other types of bends. Besides standard 30°, 45°, 60°, 90° and 180° configurations, special angles are also available upon request. Select a horizontal wheel bend whenever is possible.
- **Bi ldci hr[f <_h^m**
  An alternative to wheel bends, horizontal bends are useful in conditions requiring large space, long products with large turning radius and twin – track bend applications. It has higher friction compared to wheel bends. Larger radius is recommended for lower friction and less stress on slide rail.
- **P_lnq] [f <_h^m**
  A vertical bend provides vertical change of the conveyors moving direction. It can be used either as a convex or concave bend. Vertical bends increase the chain tension and cause higher stress on the slide rail. Avoid using more than four 90° vertical bends in one conveyor.

Mfc^_ L[df
A slide rail provides low friction and wear resistant track for the chain to slide on. It is mounted to a conveyor frame using screws or rivets. Various types of slide rails are available to meet different requirements like normal operation, high speed, high load, conductive and accumulation applications.

=ihp_sil @[g_m
Conveyor frames are made of Stainless Steel provided in cut to length sizes to match the application. The conveyor side frame is provided with mounting locations for guides and support stands.

Aoc^_ L[df; mm_g\fs Msmm_g
Guide rail components are used to guide and contain products throughout the conveyor system and prevent them from falling off the conveyor. We provide a comprehensive range of Stainless Steel guide rails, and brackets either fixed or adjustable to cover many specialized product sizes and shapes.

Mhlo]nol[f Msmm_g
Our Stainless Steel structural support system consists of Stainless support stands cut to the height of the application. Each support includes a tripod base for fine height adjustments.

=ihp_sil;]]_mmilc_m
We offer a wide selection of conveyor accessories from special bolt & nuts, brackets, connecting strips, rivets, rollers, and washers for inter-connection between modules and components.

HOW TO PURCHASE

Purchasing a FlexMove Conveyor

Dorner offers three solutions for purchasing a FlexMove Conveyor.

- The first solution is to order all the necessary parts and components to build your FlexMove Conveyor on site. This will require the proper tools for cutting, bending and installing the conveyor. Consult our installation guide for FlexMove Conveyors for more details.
- The second solution is to have a complete conveyor provided through our FlexMove Solutions. With FlexMove Solutions, you can have the conveyor built in our facility, tested, broken down into shippable sections and shipped to the end site for installation.
- The third solution is to work with Dorner to have your FlexMove Conveyor assembled at the final site. The Conveyor will be purchased similar to option 2, but will be shipped as pre-cut and sized components. The Dorner installation team will then assemble and test the equipment at your location. Contact a Dorner representative for a quote on this service.

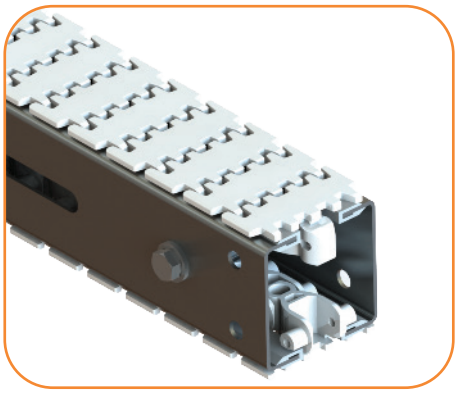

65 mm (2.5 in)

- Maximum load = 30 kg/m (20 lbs/ft)
- Maximum total load = 136 kg (300 lbs) non-accumulated
- Maximum length = 30 m (98 ft)
- Maximum Speed = 58 mpm (190 fpm)

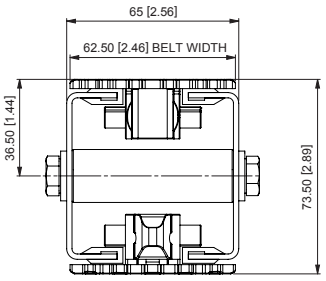

65 MM WIDTH

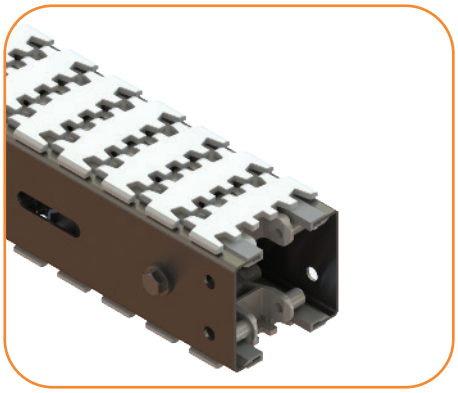

85 mm (3.4 in)

- Maximum load = 60 kg/m (40 lbs/ft)
- Maximum total load = 272 kg (600 lbs) non-accumulated
- Maximum length = 30 m (98 ft)
- Maximum Speed = 58 mpm (190 fpm)

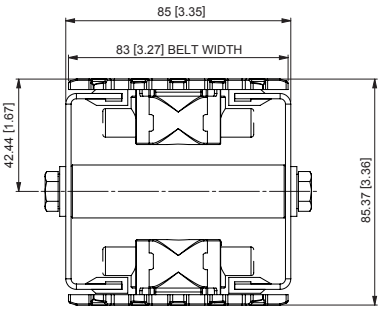

85 MM WIDTH

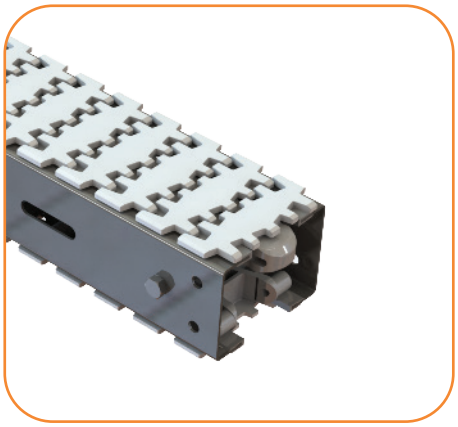

105 mm (4.1 in)

- Maximum load = 60 kg/m (40 lbs/ft)
- Maximum total load = 272 kg (600 lbs) non-accumulated
- Maximum length = 30 m (98 ft)
- Maximum Speed = 58 mpm (190 fpm)

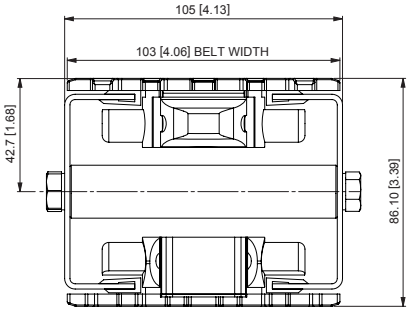

105 MM WIDTH

Note: Conveyor modules may be made up of several length of conveyor beam. Maximum length piece beam is 3,000 mm (118 in).
Note: Dimensions = mm (in)

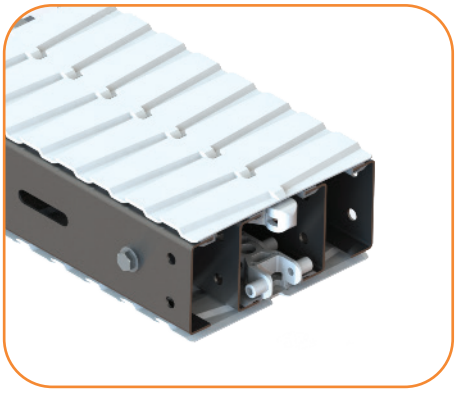

180 mm (7.1 in)

- Maximum load = 65 kg/m (44 lbs/ft)
- Maximum total load = 272 kg (600 lbs) non-accumulated
- Maximum length = 30 m (98 ft)
- Maximum Speed = 58 mpm (190 fpm)

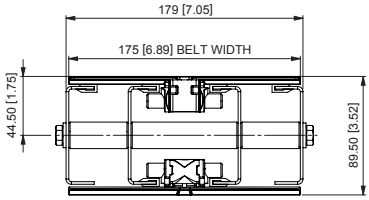

179 MM WIDTH

260 mm (10.2 in)

- Maximum load = 65 kg/m (44 lbs/ft)
- Maximum total load = 272 kg (600 lbs) non-accumulated
- Maximum length = 30 m (98 ft)
- Maximum Speed = 58 mpm (190 fpm)

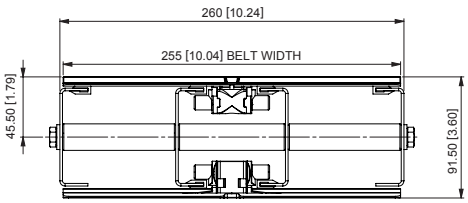

260 MM WIDTH

Note: Conveyor modules may be made up of several length of conveyor beam. Maximum length piece beam is 3,000 mm (118 in).
Note: Dimensions = mm (in)

SS Series

MMM_lc_m4

<_[g Qc^rb4 65 mm

Jli ^o]nQc^rb4 Refer to Guide Rail Assembly

;]]_mmilc_mH__^_^4

Mfc^_L[dL_kod_^4 FASR-25 OR FASR-25U

Mfc^_L[d=ifil4 White or Natural Color

Mfc^_L[dG[n_ldf4 HDPE OR UHMW

Mfc^_L[dLqp_m4 FASLS-M5

Connecting strip is used to connect 2 beams.

=ihh_]mha MHlg4 SACS-50x70

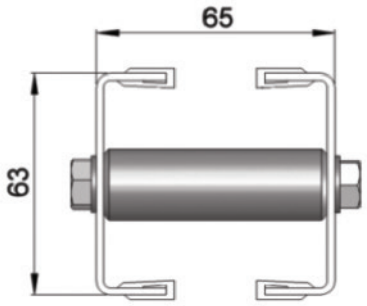

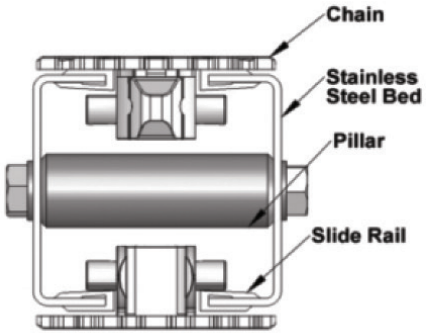

Conveyor Beam SSCB-LXXXX

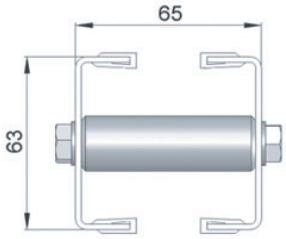

Qb_l_4
RRRR 7 F_harb 'g g #

Ol G4_[]b

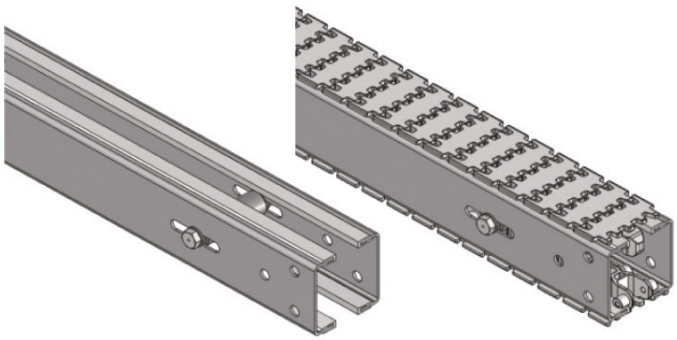

Chain Connecting Module SSCC-160

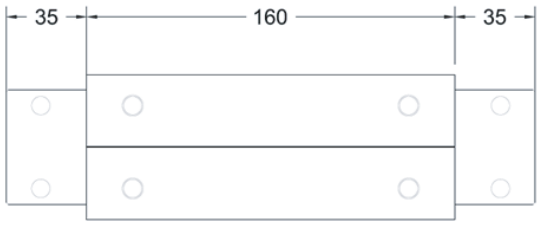

Ol G4- G_nl) F_harb

Connecting Strip – Stainless Steel SACS-50x70

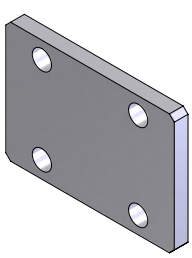

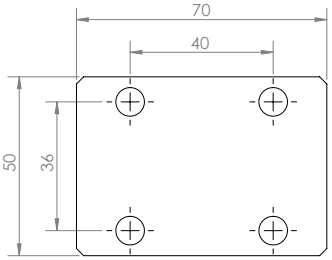

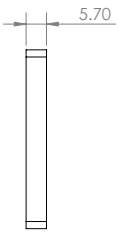

Ol G4j]

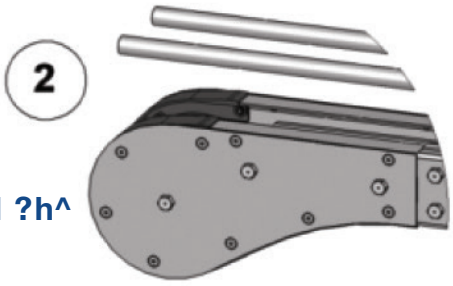

C^f_l ?h^

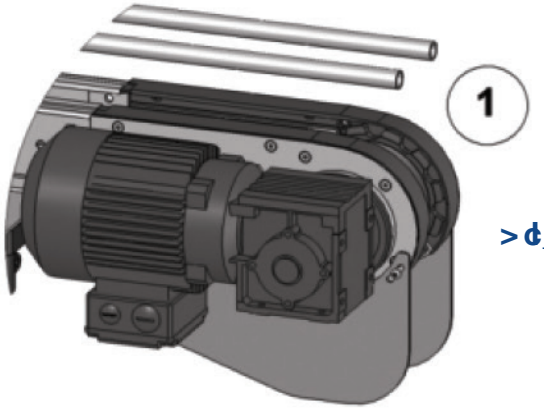

>d_]n>lqp_

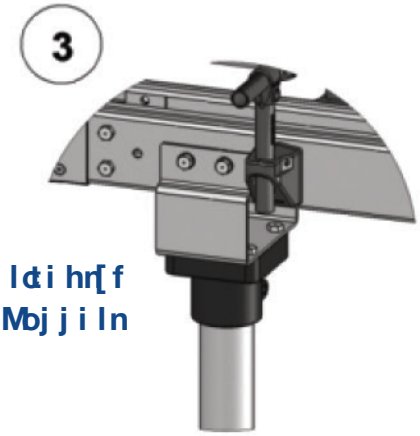

Bilotihn[f
<_[g Mojjiln

Nqji ^
Mlo]nol_

=b[dh =i g g i h >[r[

J[ ] e[adha45 m per box

Jcr] b425.4 mm

Q c^rb463 mm

Tensile Strength at 20°C: 4000N

=i fi l4 White & Black (Conductive)

G[n_l d[f4

=b[dh4 White Acetal / POM

Jcpi m4 Polyamide

Jcpi nJdh4 Stainless Steel

Chm_l n"Q_^a_ @l d] mc h#4TPE Grey

?r[g j f_ `i l @M=N/; +1'F

7 + cleated top chain with alternate of # link of plain chain

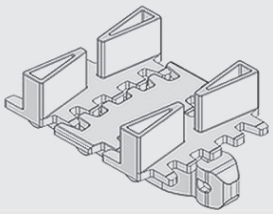

The above chain is FSCT-5A17-L1, 1 link cleated top chain with alternate of 1 link of plain chain.

Hi n_4 7 +&, &- &. &/ (((((, *

Standard Plain Chain @MJ='/

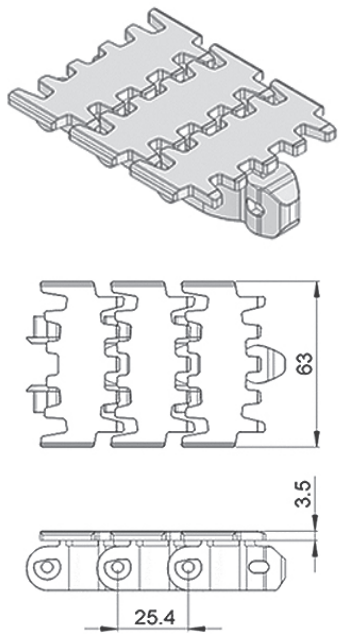

OI G4/ G_n_l) \ i r

Application: Suitable for horizontal and slope < 5° transport of products with accumulation.

Universal Chain @MO='/

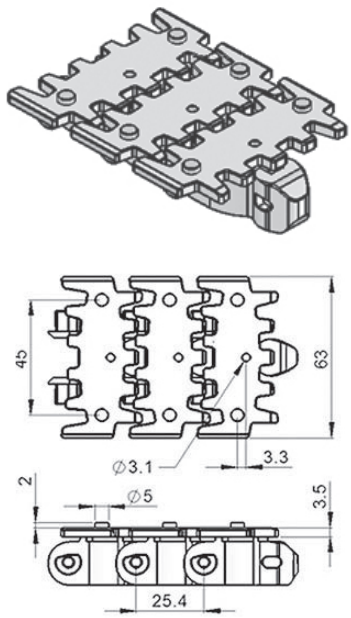

OI G4/ G_n_l) \ i r

Application: Universal Link with M3 Nut, Suitable for attached customer cleat or fixture

Wedge Top Chain @MQ N/;

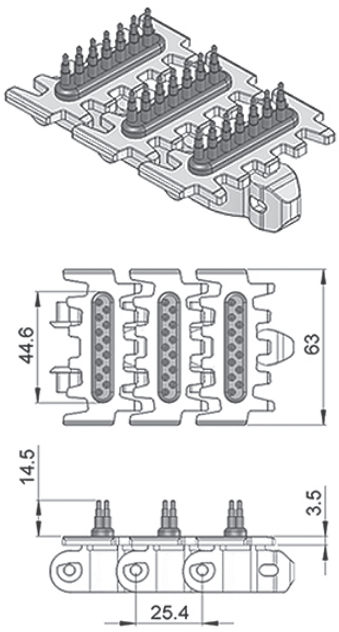

OI G4/ G_n_l) \ i r

Application: Vertical Wedge transportation of products.

Wedge Top Chain @MQ N/=

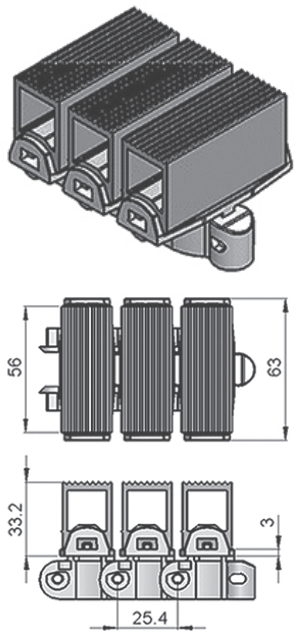

OI G4/ G_n_l) \ i r

Application: Vertical Wedge transportation of products. (Heavy Duty)

Wedge Top Chain @MQ N/>

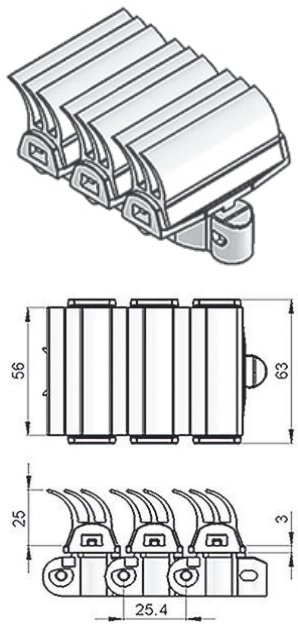

OI G4/ G_n_l) \ i r

Application: Vertical Wedge transportation of products.

Friction Top Chain @M@N/

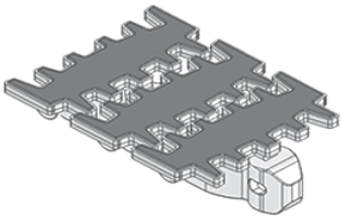

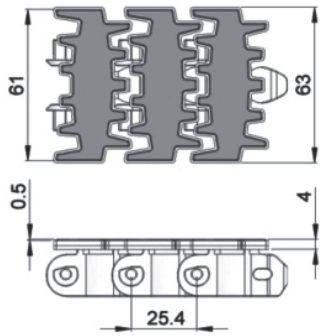

Ol G4/ G_nl)\ir

Application: Suitable for transport product in slope > 5° but ≤ 30° without accumulation.

Friction Top Chain @M@N/=

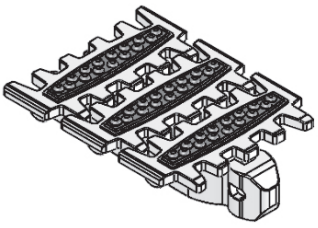

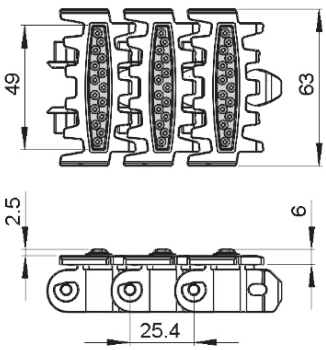

Ol G4/ G_nl)\ir

Application: Suitable for transport product in slope > 5° but ≤ 35° without accumulation. Subject to product weight and packing

Twist Chain @MJ='/G

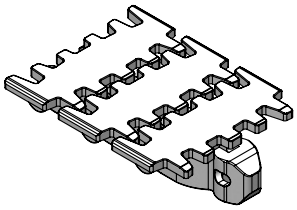

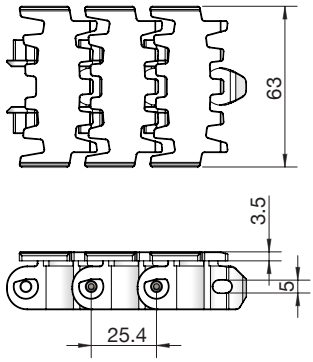

Ol G4/ G_nl)\ir

Application: Suitable twist conveyor beam; horizontal and slope < 5° transport of products with accumulation

Conductive Chain @MJ='/=>

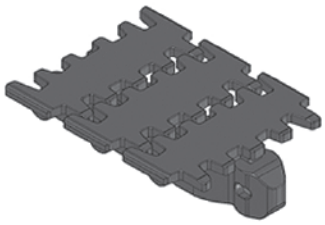

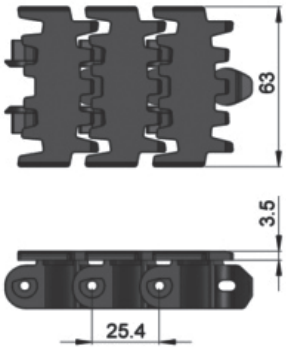

Ol G4/ G_nl)\ir

Application: Suitable for transport of static sensitive product.

Flocked Chain @M@E'/

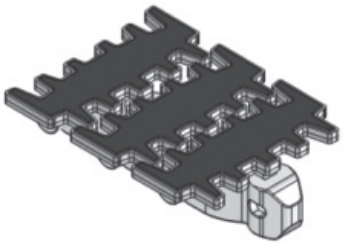

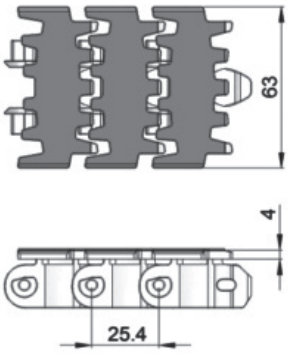

Ol G4/ G_nl)\ir

Application: Suitable to transport lightweight, fragile and scratch sensitive product.

Cleat Top Chain-A @M=N/;+1'F

7 +&, &-&. &/ (((((, *

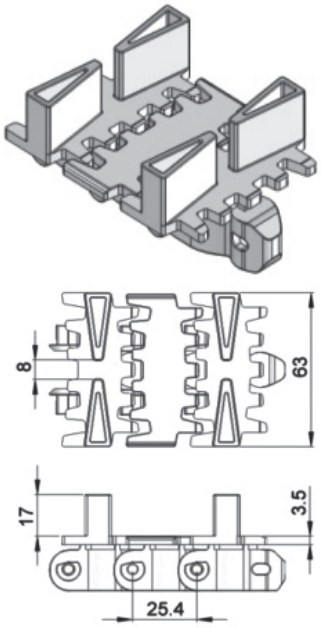

Ol G4/ G_nl)\ir

Application: Suitable for vertical transport of product with no accumulation.

Cleat Top Chain-A @M=N/;-*'F

7 +&, &-&. &/ (((((, *

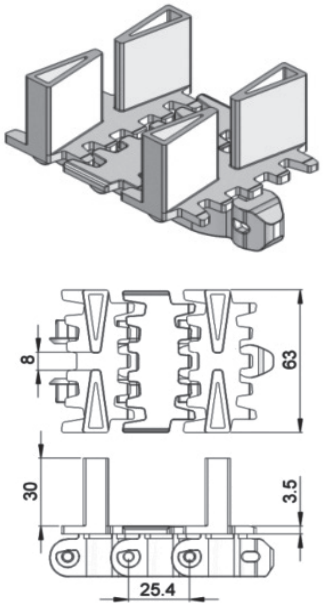

Ol G4/ G_nl)\ir

Application: Suitable for vertical transport of product with no accumulation.

Cleat Top Chain-B @M=N/<

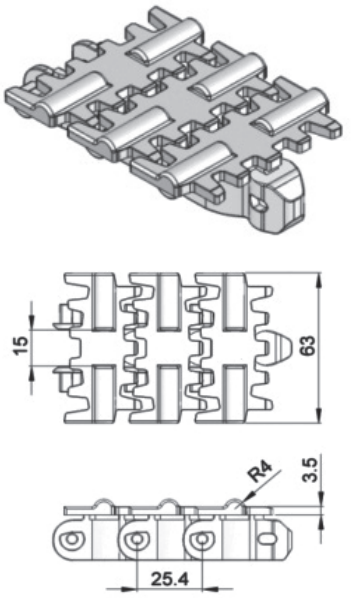

Ol G4/ G_nl)\ir

Application: Suitable Cigarette transport.

Cleat Top Chain-C @M=N/=

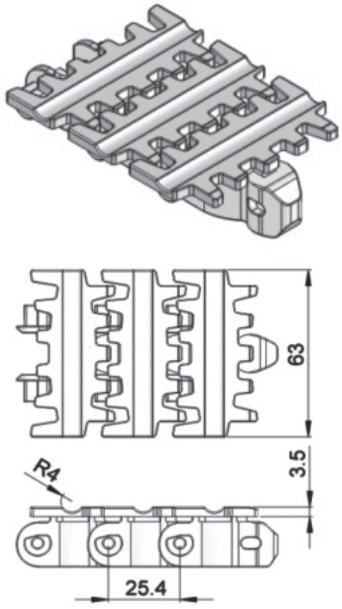

Ol G4/ G_nl)\ir

Application: Suitable for Cigarette transport.

Magnet Top Chain @MGN/

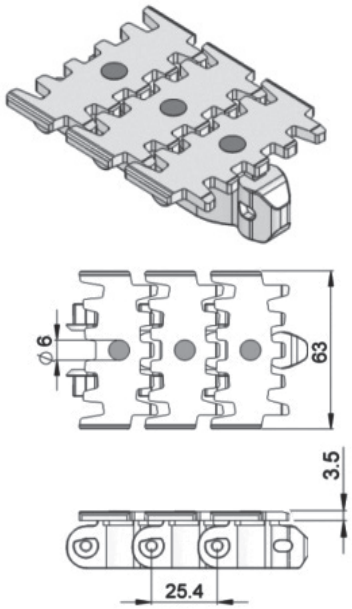

Ol G4/ G_nl)\ir

Application: Suitable for conveying ferromagnetic products in slope.

Magnet Top Chain @MGN/'F

7 +&, &-&. &/ (((((, *

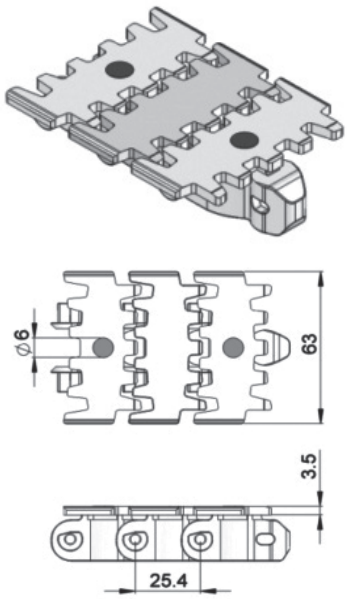

Ol G4/ G_nl)\ir

Application: Suitable for conveying ferromagnetic products in slope.

Hardened Steel Top Chain @MN/

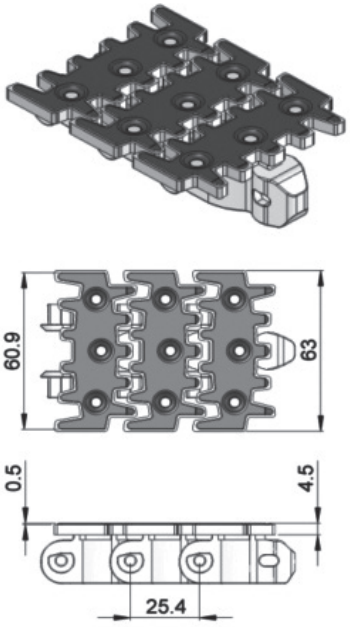

OI G4/ G_nl)\ir

Application: Suitable to transport metal products in accumulation.

Stainless Steel Top Chain @MN/M

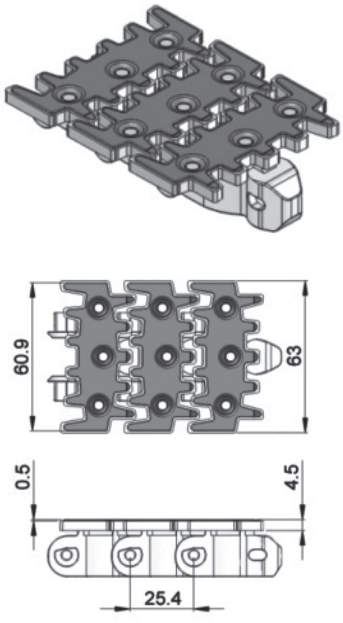

OI G4/ G_nl)\ir

Application: Suitable to transport metal products in accumulation.

Roller Top Chain @ML.N/

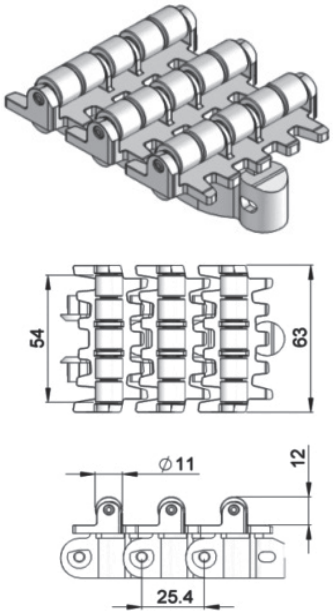

OI G4/ G_nl)\ir

Application: Suitable for accumulation of product with low friction and pressure.

Roller Cleat Chain @ML='/;'F

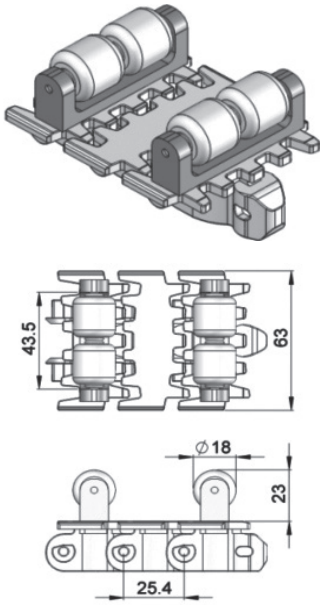

OI G4/ G_nl)\ir

Application: Suitable for vertical transportation, of product in slope with no accumulation.

SS Direct End Drive without Motor "F?@N#

SSDD-A65-0L

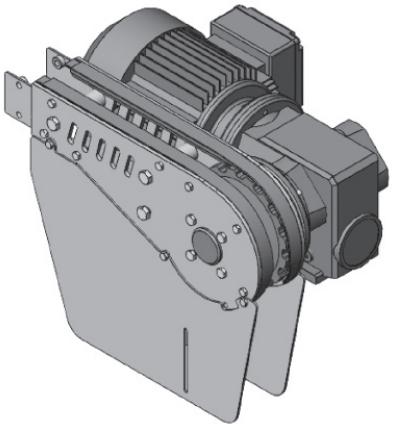

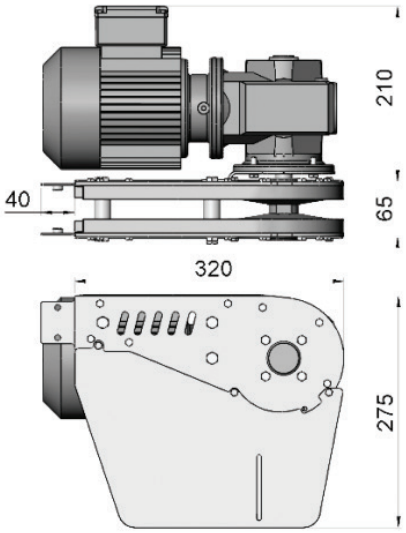

SS Direct End Drive without Motor "LOABN#

SSDD-A65-0R

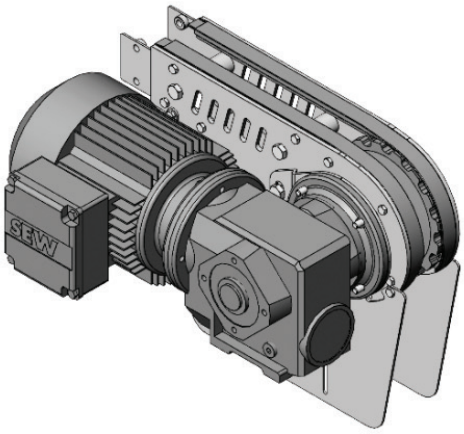

G[r N[]mch@il]_4/H**

The standard Direct End Drive Unit is without torque limiter. See page 66-67 for Gearmotor options.

OI G4j]

Chain required 2-way: 0.8 meter Slide rail required 2-way: 0.5 meter

SS Direct End Drive without Motor GP "F?@N#

SSDD-A65GP-0L

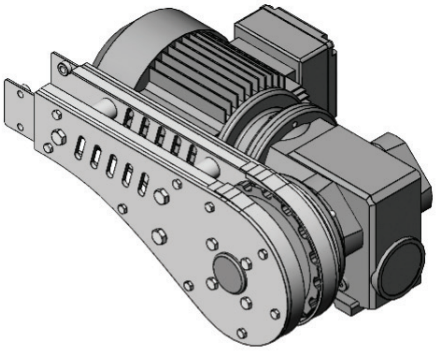

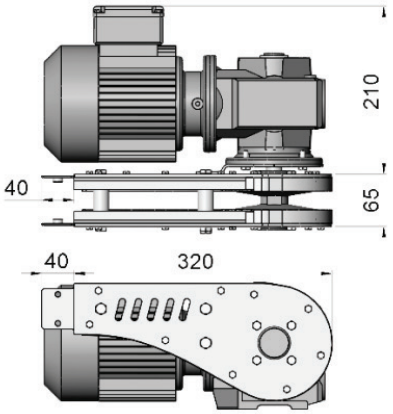

SS Direct End Drive without Motor GP "LOABN#

SSDD-A65GP-0R

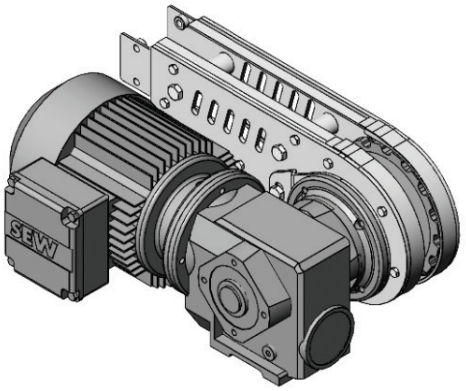

G[r N[]mch@il]_4/H**

The Direct End Drive GP is used for vertical wedge conveyor. See page 66-67 for Gearmotor options.

OI G4j]

Chain required 2-way: 0.8 meter Slide rail required 2-way: 0.5 meter

F&P %ÉW/≠ ∂Ê∂/› %W/É%/∂y ÔoÊ %ÊF&P %Ô/∂y/¢É

SS Idler End-A65 — SSIE-A65

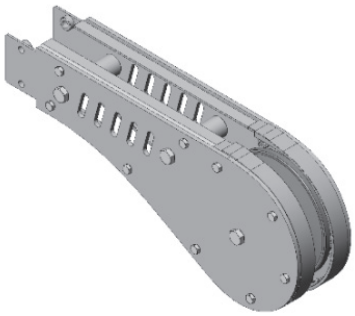

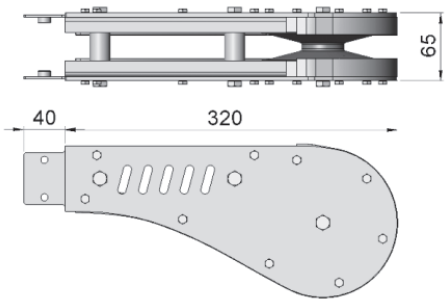

Ol G4j]
Chain required 2-way: 0.8 meter
Slide rail required 2-way: 0.5meter

SS Wheel Bend 180° — SSWB-180R150A

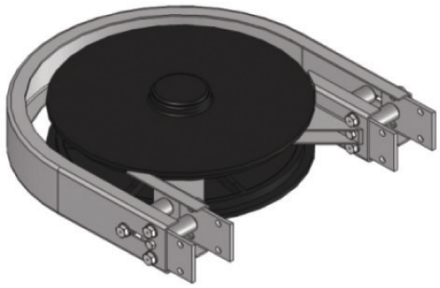

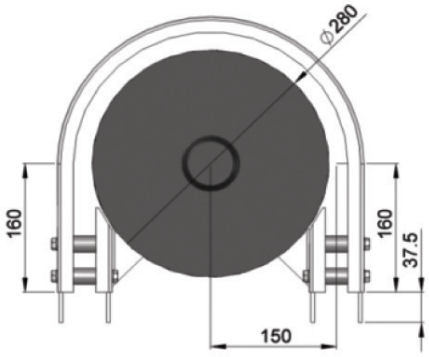

Ol G4j]
Chain required 2-way: 1.4 meter
Slide rail required 2-way: 2.8 meter

SS Wheel Bend 90° — SSWB-90R150A

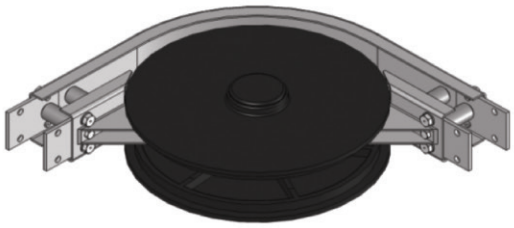

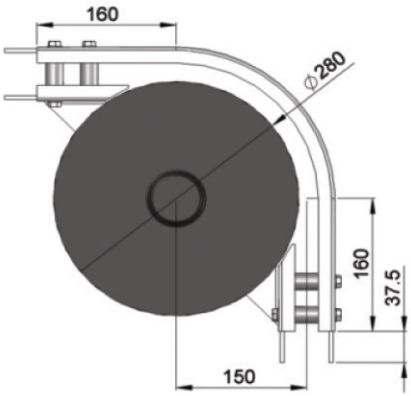

Ol G4j]
Chain required 2-way: 0.9 meter
Slide rail required 2-way: 1.7 meter

SS Wheel Bend 45° — SSWB-45R150A

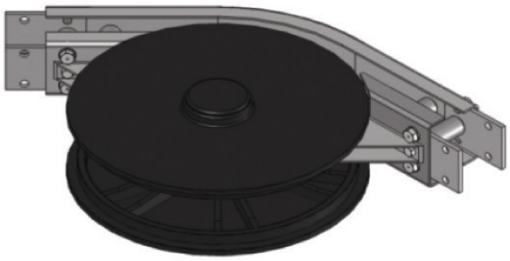

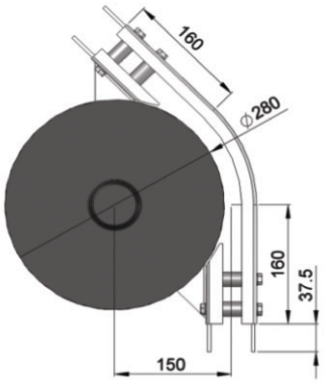

Ol G4j]
Chain required 2-way: 0.6 meter
Slide rail required 2-way: 1.2 meter

SS Wheel Bend 5° - 180°

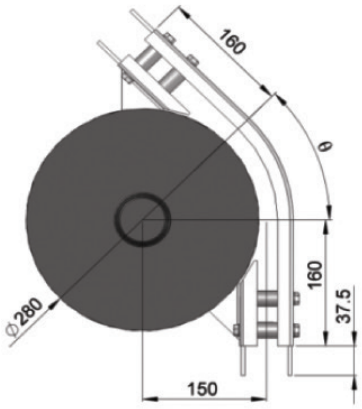

?r[g j f_ `i l MMQ b__f <_h^ l l^_lcha

- Wheel bend, Ø° ± 1°

If an angle of 65° is needed for wheel bend,
the ordering part number is

MMQ <'0/ L +/ *

HüÉ%ôÊÉ/%ÉÉ≤y%%W › É≠ e©Ey%ô ¢≤ó%ô≥≤≤ÉoÊ¢≤ó%Ê¢≈
‹F # F°í ¸ ˜ · í »%≤ó©Ê%ê%|%Ô Ê%É%≤y¢WÊÉy
ˆ üÉ≤%/yÉ/¢≤ó

SS Horizontal Plain Bend 30°

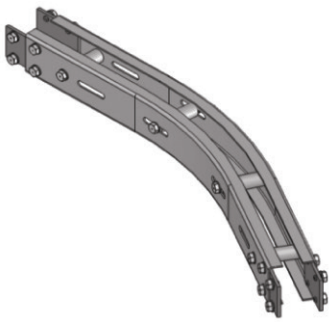

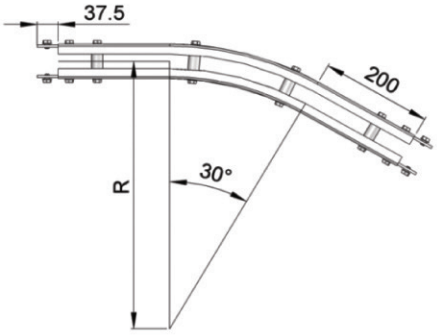

Bi lcti hn[f j f[dn \ _h^&-*ª ∂ +ª

R = 500 ± 10 mm	**MMB<'-*L/****
R = 700 ± 10 mm	**MMB<'-*L1****

Ol G4j]
Chain required 2-way (500, 700): 1.4, 1.6 meter
Slide rail required 2-way (500, 700): 2.8, 3.2 meter

SS Horizontal Plain Bend 45°

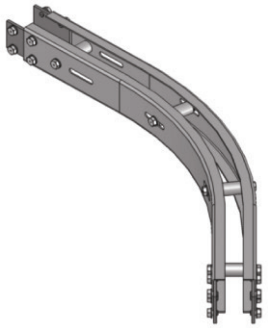

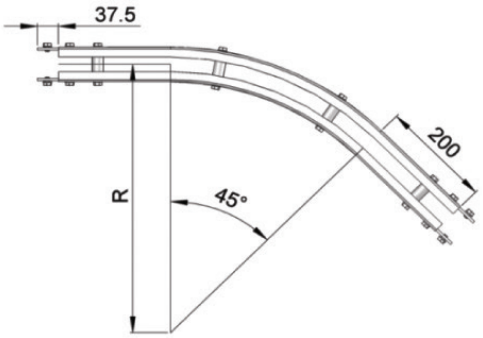

Bi lcti hn[f j f[dn \ _h^&./ª ∂ +ª

R = 500 ± 10 mm	**MMB<'./L/****
R = 700 ± 10 mm	**MMB<'./L1****

Ol G4j]
Chain required 2-way (500, 700): 1.6, 1.9 meter
Slide rail required 2-way (500, 700): 2.9, 3.3 meter

SS Horizontal Plain Bend 90°

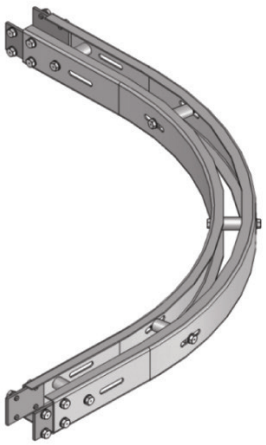

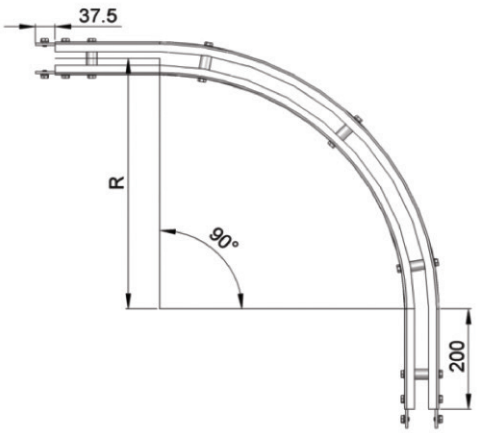

Bi lcti hn[f j f[dn \ _h^&3*ª ∂ +ª

R = 500 ± 10 mm	**MMB<'3*L/****
R = 700 ± 10 mm	**MMB<'3*L1****

Ol G4j]
Chain required 2-way (500, 700): 2.4, 3.0 meter
Slide rail required 2-way (500, 700): 4.8, 6.0 meter

SS Horizontal Plain Bend 5-180°

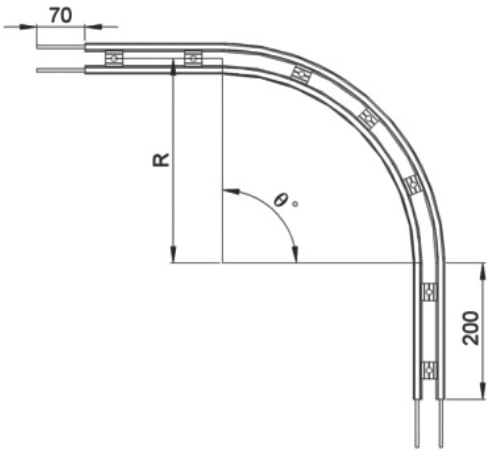

?r[g j f_ `i l MMBi lɑi hr[f Jf[ɑh <_h^ l l^_ lɑha

Bi lɑi hr[f j f[ɑh \ _h^&ß ª ∂ +ª

R = 500 ± 10 mm **MMB<' ß ªL / ***

R = 700 ± 10 mm **MMB<' ß ªL 1 * ***

If an angle of 120° is needed for radius R500 horizontal plain bend, the ordering part number is

MMB<' +, * L / * *

Ol G4j]
Chain required 2-way (500, 700): meter (Variable to angle)
Slide rail required 2-way (500, 700): meter (Variable to angle)

SS Vertical Bend 5°

SSVB-5R300

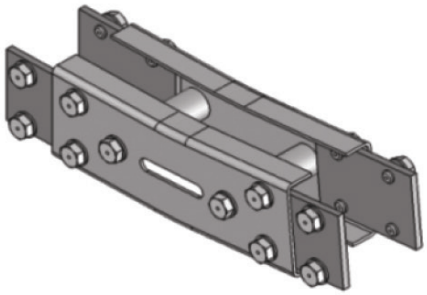

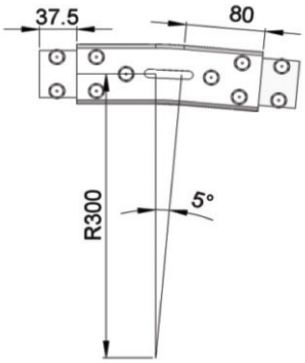

Ol G4j]
Chain required 2-way: 0.4 meter
Slide rail required 2-way: 0.8 meter

SS Vertical Bend 15°

SSVB-15R300

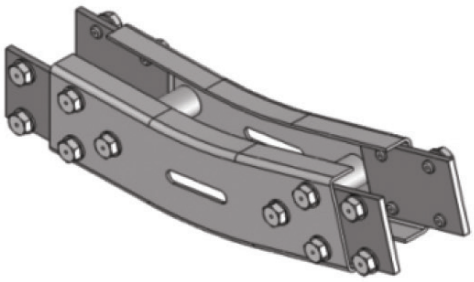

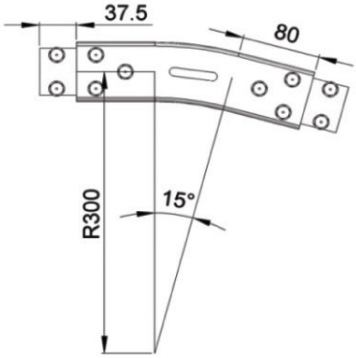

Ol G4j]
Chain required 2-way: 0.6 meter
Slide rail required 2-way: 1.1 meter

SS Vertical Bend 30°

SSVB-30R300

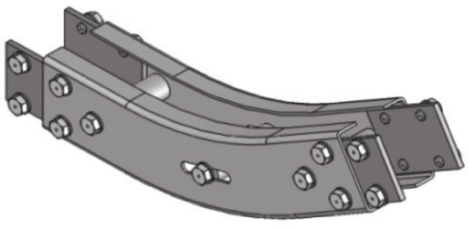

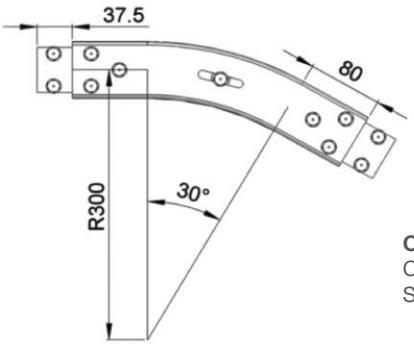

Ol G4j]
Chain required 2-way: 0.8 meter
Slide rail required 2-way: 1.5 meter

SS Vertical Bend 5° - 90°

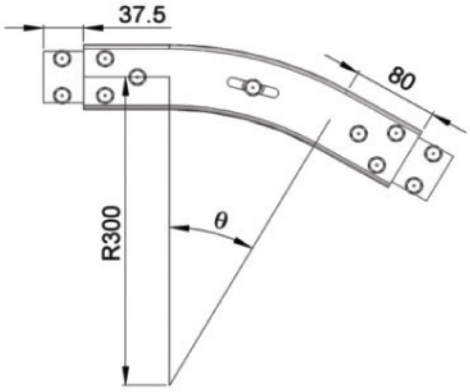

?r[g j f_ `i l MMP_lm][f<_h^ l l^_lcha

- Vertical bend, Ø° ± 1°

If an angle of 25° is needed for vertical bend,
the ordering part number is

MMP<', / L-**

HüÉ%ÔÊÉ/%ÉÉ≤y%%W› É≠ e©Éy%Ô ¢≤ó%∂≤≤ÉoÊ≤ó%Ê¢≈
‹F # F°í ¸ ˜· í »%≤ó©Ê%ÊA| %Ô ÊÉ%Ê≤y ¢VÊÉy
ˆ üÉ≤%/y É/¢≤ó

SS Horizontal Beam Support Bracket – Stainless Steel

SAHBS-90S

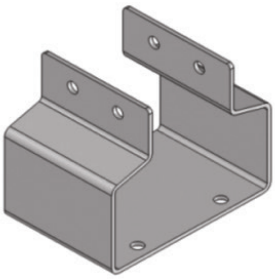

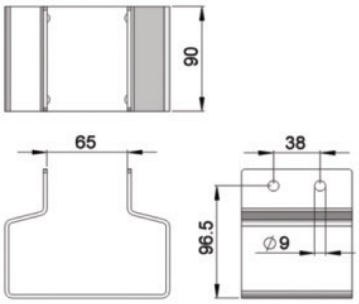

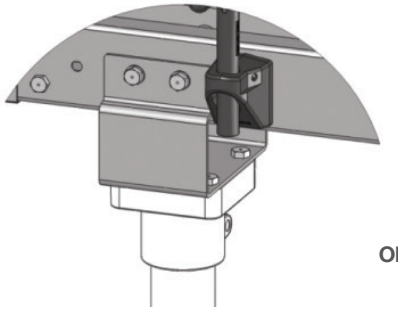

OI G4j]

SS Adjustable Angle Beam Support Bracket

SAHBS-90S-A35

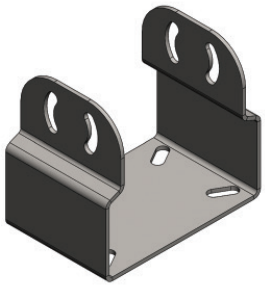

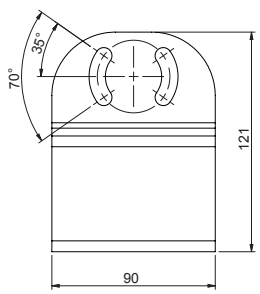

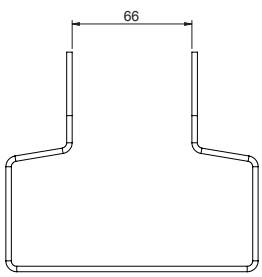

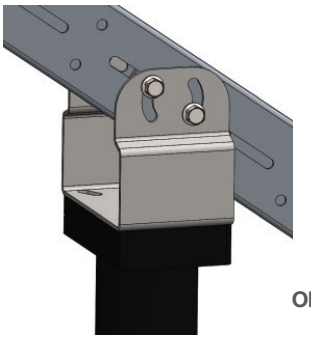

OI G4j]

SS Horizontal Tripod Support

SBSS-HXXXX, where XXXX = H Height (mm)

SS Adjustable Angle Tripod Support

SBSS-A-HXXXX, where XXXX = H Height (mm)

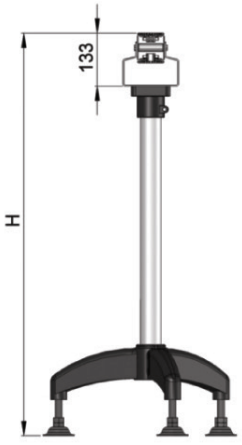

OI G4j]
Includes Beam Support Bracket

SM Series

MG M_lc_m4

<_[g Qc^rb485 mm

Jli ^o]nQc^rb4Refer to Guide Rail Assembly

;]]_mmilc_mH__^_^4

Mfc^_ L[dL_kod_^4FASR-25 OR FASR-25U

Mfc^_ L[d=ifil4White or Natural Color

Mfc^_ L[dG[n_ldf4HDPE OR UHMW

Mfc^_ L[dLqp_n Mjl_q4FASLS-M5

Connecting strip is used to connect two beams.

=ihh_]nha MHlg4SACS-50x70

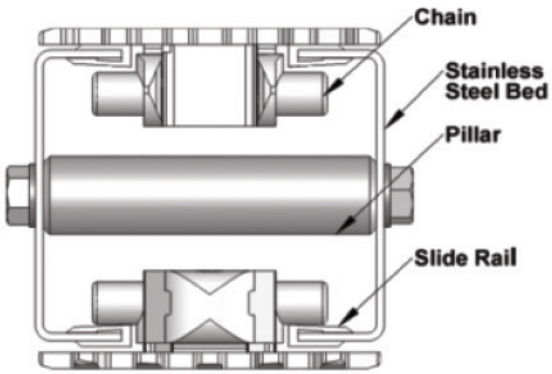

Conveyor Beam SMCB-LXXXX

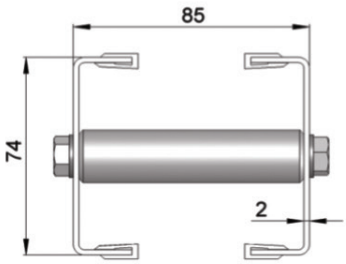

Qb_l_4
RRRR 7 F_harb "g g #

Ol G4_[]b

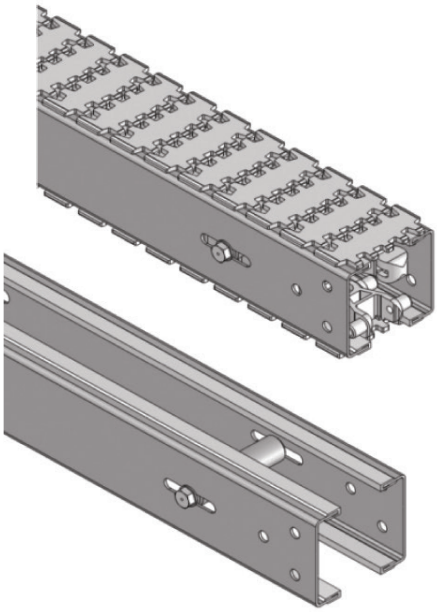

Chain Connecting Module SMCC-160

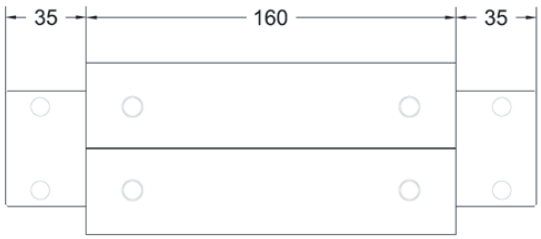

Connecting Strip – Stainless Steel

SACS-50x70

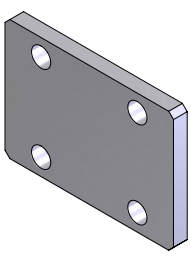

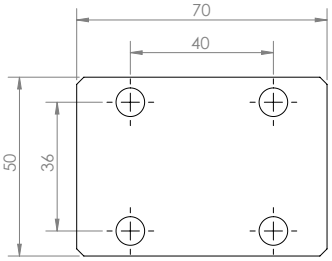

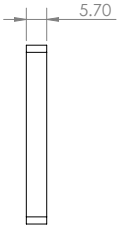

Ol G4j]

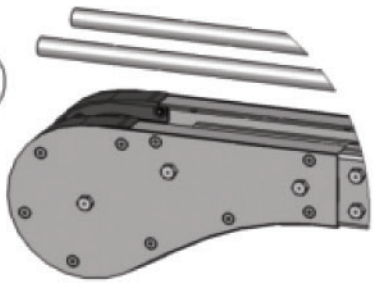

C^f_l ?h^

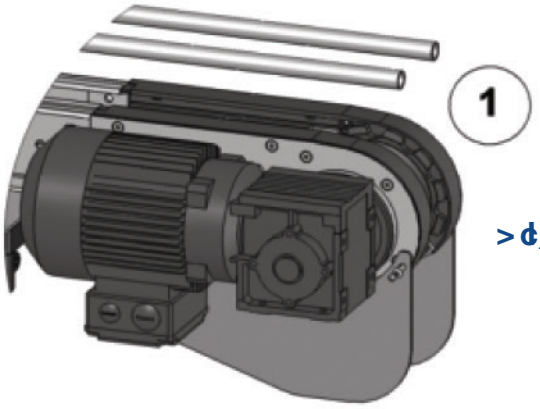

>d_] n>lqp_

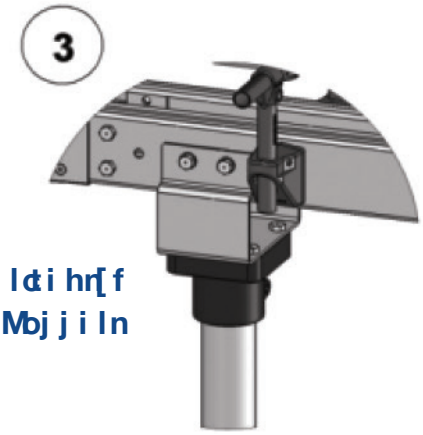

Bi ldi hn[f
<_[g Mbj j i ln

Nqj i ^
Mrlo] nol_

=b[dh =i g g i h >[n[

J[ ] e[adha4 5 m per box

J ori] b4 33.5 mm

Q c^rb4 83 mm

Tensile Strength at 20°C: 6000N

=i fi l4 White & Black (Conductive)

G[n_l d[f4

=b[dh4 White Acetal / POM

J opi n4 Polyamide

J opi nJ dh4 Stainless Steel

Chm_l n"Q _^a_ @l d] mi h#4 TPE Grey

?r[g j f_ `i l @G=N/; +1'F

7 + cleated top chain with alternate of # link of plain chain

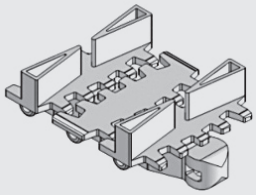

The above chain is FMCT-5A17-L1, 1 link cleated top chain with alternate of 1 link of plain chain.

Hi n_4 7 +&, &- &. &/ (((((, *

Standard Plain Chain @G J='/

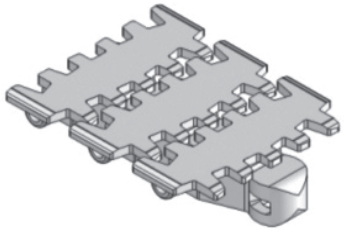

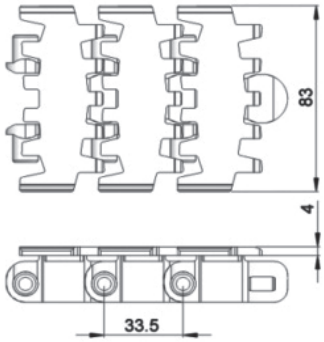

OI G4/ G_n_l) \ i r

Application: Suitable for horizontal and slope < 5° transport of products with accumulation.

Conductive Chain @G J='/=>

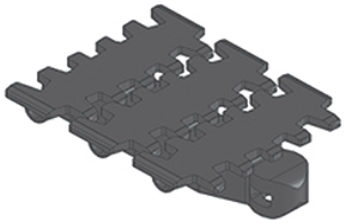

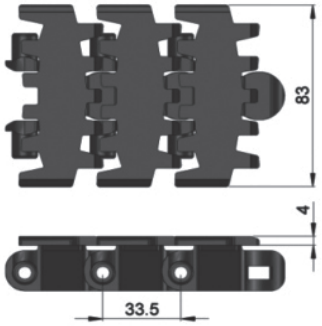

OI G4/ G_n_l) \ i r

Application: Suitable for transport of static sensitive product.

Twist Chain @G J='/G

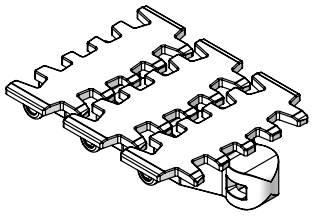

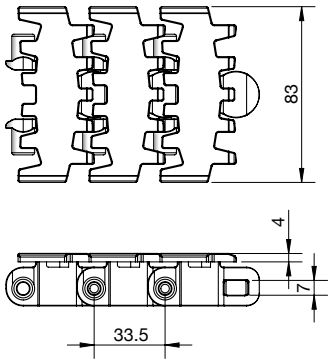

OI G4/ G_n_l) \ i r

Application: Suitable twist conveyor beam; horizontal and slope < 5° transport of products with accumulation

Safety Chain @G J='/P

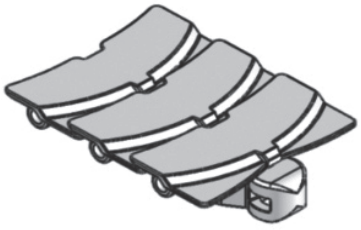

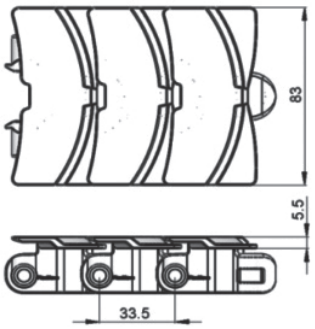

OI G4/ G_n_l) \ i r

Application: (Safety Chain) Suitable for horizontal and slope < 5ª transport of products with accumulation

Safety Chain Friction Top @G @N/P';

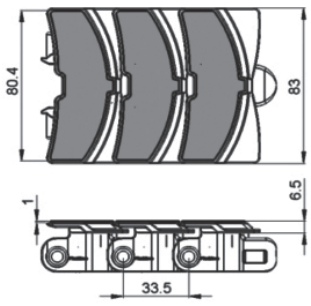

OI G4/ G_n_l) \ i r

Application: (Safety Chain) Suitable for transport product in slope > 5° but ≤ 30° without accumulation.

Friction Top Chain @G@N/

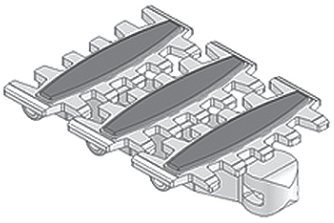

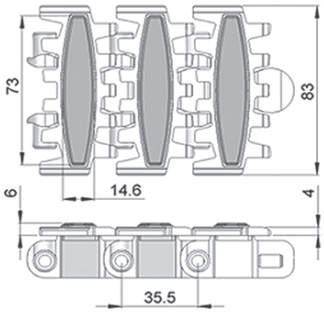

OI G4/ G_nl)\ir

Application: Suitable for transport product in slope > 5° but ≤ 30° without accumulation.

Friction Top Chain @G@N/;

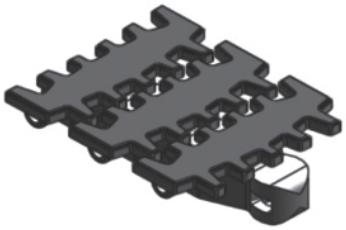

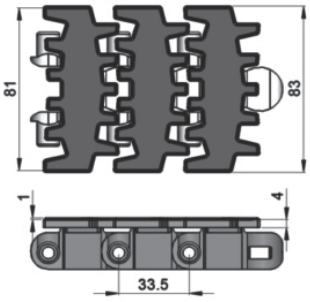

OI G4/ G_nl)\ir

Application: Suitable for transport product in slope > 5° but ≤ 30° without accumulation.

Wedge Top Chain @GQN/;

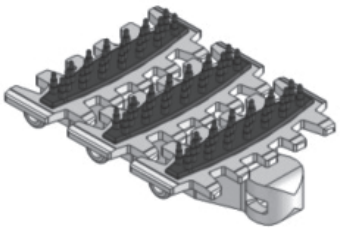

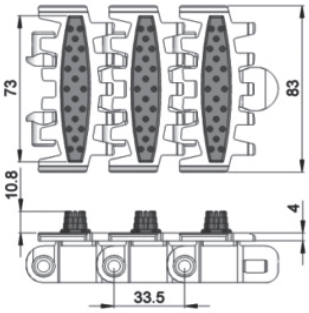

OI G4/ G_nl)\ir

Application: Vertical Wedge transportation of products.

Wedge Top Chain @GQN/<

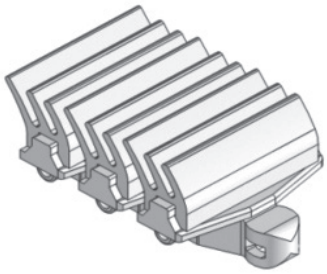

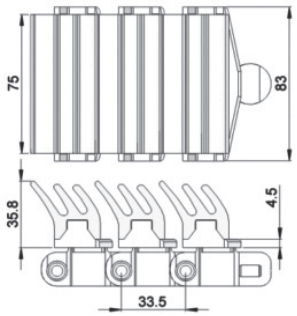

OI G4/ G_nl)\ir

Application: Vertical Wedge transportation of products (Heavy Duty)

Wedge Top Chain @GQN/=

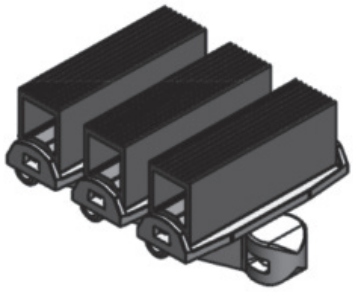

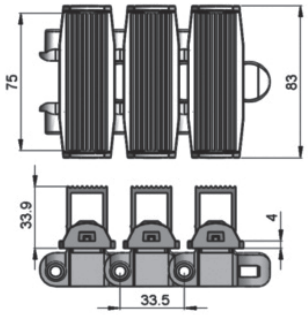

OI G4/ G_nl)\ir

Application: Vertical Wedge transportation of products (Heavy Duty)

Wedge Top Chain @GQN/>

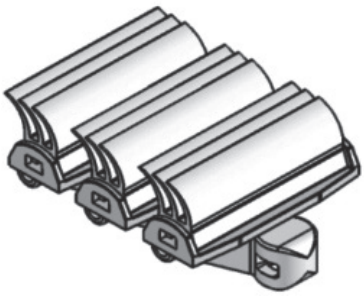

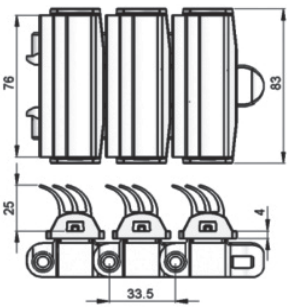

OI G4/ G_nl)\ir

Application: Vertical Wedge transportation of products.

Magnet Top Chain @GGN/

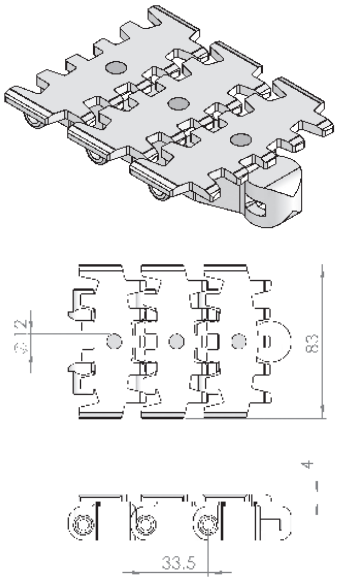

OI G4/ G_nl)\ir

Application: Suitable for conveying of ferromagnetic products in slope.

Magnet Top Chain @GGN/'F

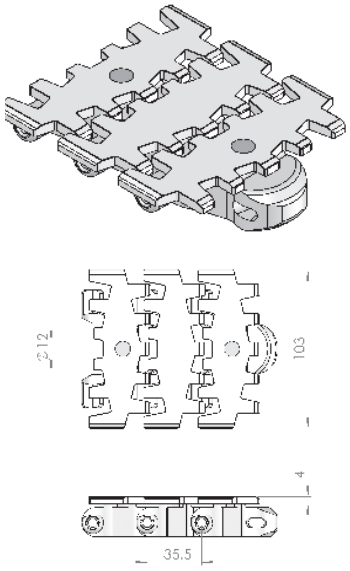

OI G4/ G_nl)\ir

Application: Suitable for conveying of ferromagnetic products in slope.

Flocked Chain @G@E'/

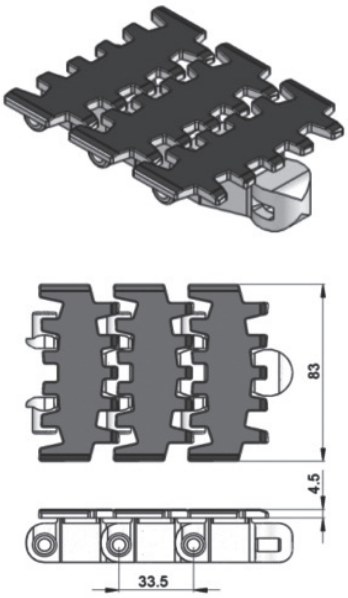

OI G4/ G_nl)\ir

Application: Suitable to transport lightweight, fragile and scratch sensitive product.

Hardened Steel Top Chain @GMN/

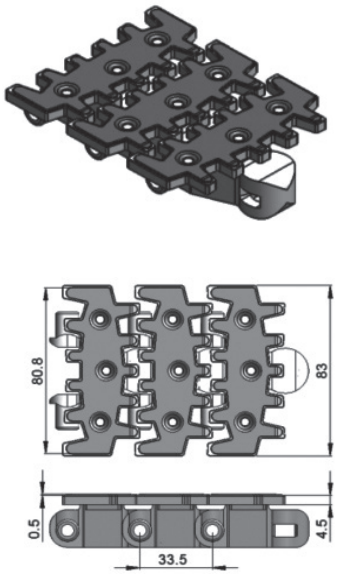

OI G4/ G_nl)\ir

Application: Suitable to transport metal products in accumulation.

Stainless Steel Top Chain @GMN/M

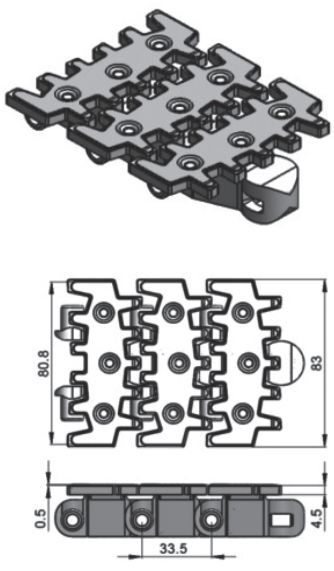

OI G4/ G_nl)\ir

Application: Suitable to transport metal products in accumulation.

Universal Chain @GO='/

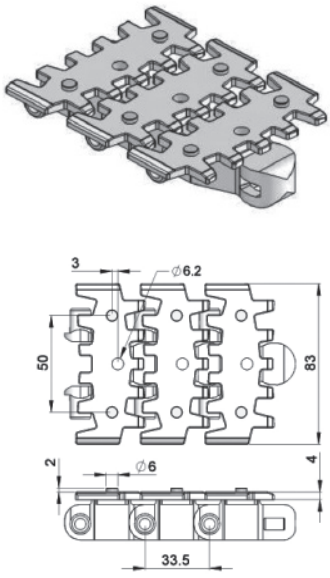

OI G4/ G_nl)\ir

Application: Universal Link with M6 Nut, Suitable for attached customer cleat or fixture.

Roller Top Chain @GLN/

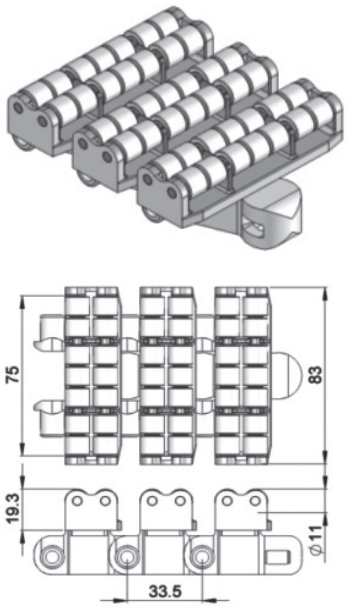

OI G4/ G_nl)\ir

Application: Suitable for accumulation of product with low friction and pressure.

Roller Cleat Chain @GL='/;'F

7 +&, &-&. &/ (((((, *

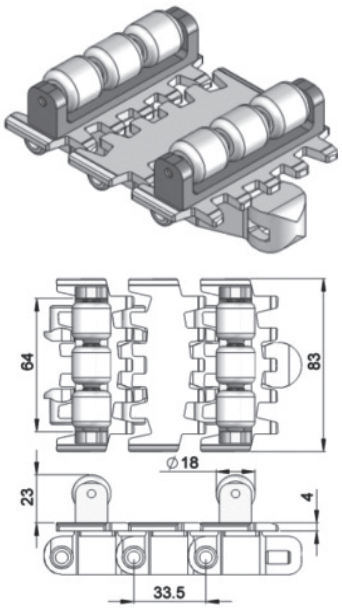

OI G4/ G_nl)\ir

Application: Suitable for vertical transportation of product in slope with no accumulation.

Roller Cleat Chain @GL='/<'F

7 +&, &-&. &/ (((((, *

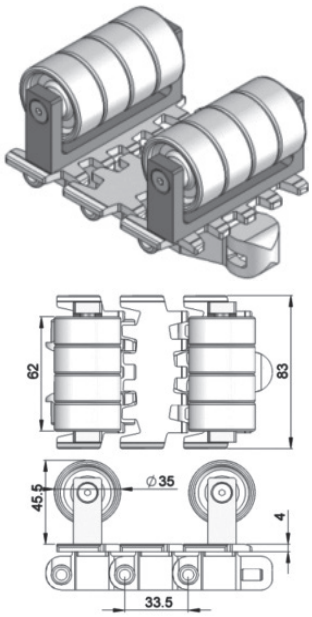

OI G4/ G_nl)\ir

Application: Suitable for vertical transportation of product in slope with no accumulation.

Cleat Top Chain @G=N/;+1'F

7 +&, &-&. &/ (((((, *

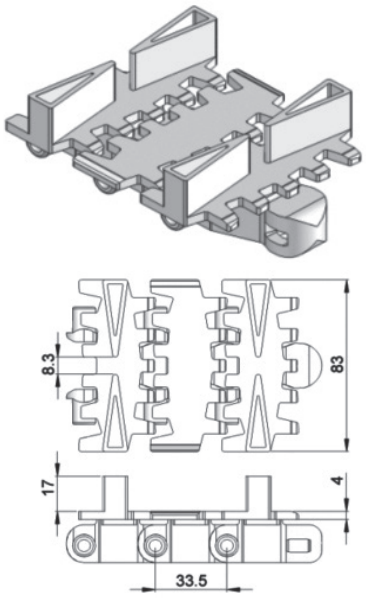

OI G4/ G_nl)\ir

Application: Suitable for vertical transport of product with no accumulation.

Cleat Top Chain @G=N/;-*'F

7 +&, &-&. &/ (((((, *

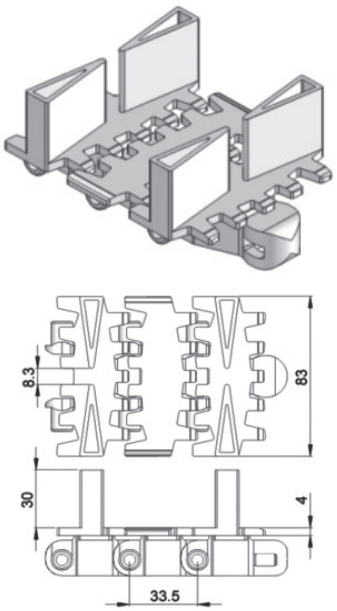

OI G4/ G_nl)\ir

Application: Suitable for vertical transport of product with no accumulation.

SM Direct End Drive without Motor "F?@N#

SMDD-A85-0L

SM Direct End Drive without Motor "LOABN#

SMDD-A85-0R

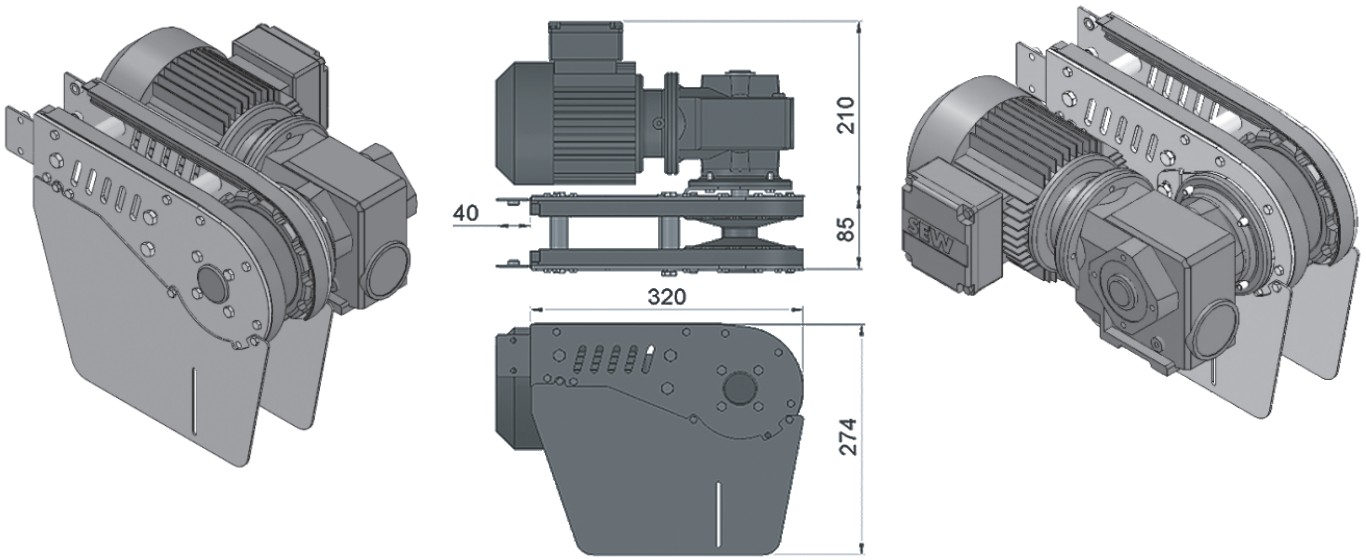

G[r N[]mch@il]_4+,/*H

The Direct End Drive Unit is without torque limiter. See page 66-67 for Gearmotor options.

OI G4j]

Chain required 2-way: 0.8 meter Slide rail required 2-way: 0.5 meter

SM Direct End Drive GP without Motor "F?@N#

SMDD-A85GP-0L

SM Direct End Drive GP without Motor "LOABN#

SMDD-A85GP-0R

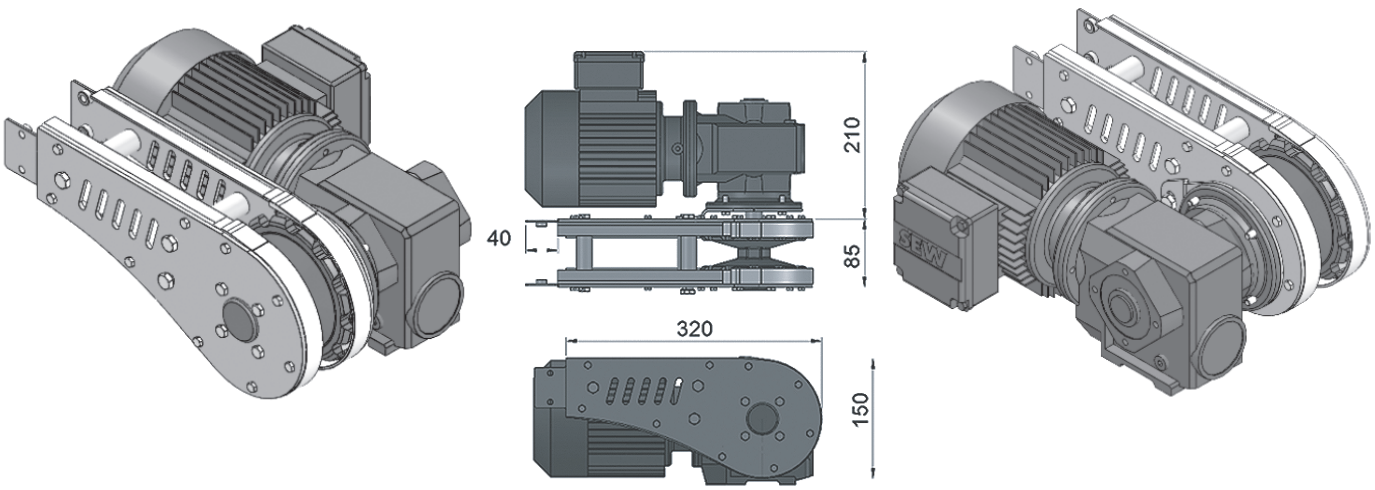

G[r N[]mch@il]_4+,/*H

The Direct End Drive Unit is without torque limiter. See page 66-67 for Gearmotor options.

OI G4j]

Chain required 2-way: 0.8 meter Slide rail required 2-way: 0.5 meter

SM Idler End-A85

SMIE-A85

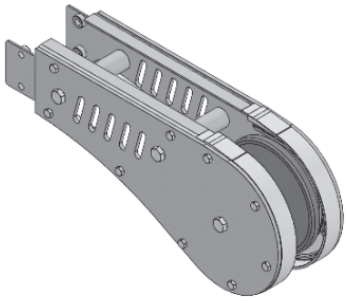

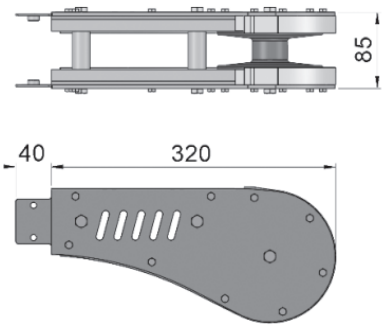

Ol G4j]
Chain required 2-way: 0.8 meter
Slide rail required 2-way: 0.5meter

SM Wheel Bend 180°

SMWB-180R160A

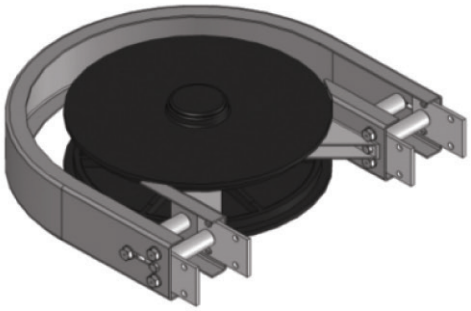

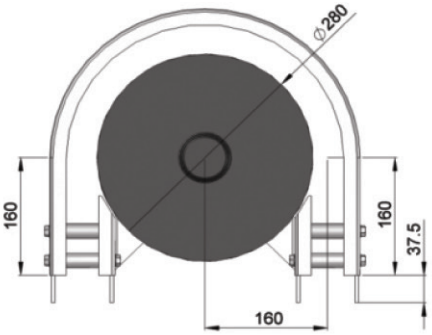

Ol G4j]
Chain required 2-way: 1.4 meter
Slide rail required 2-way: 2.8 meter

SM Wheel Bend 90°

SMWB-90R160A

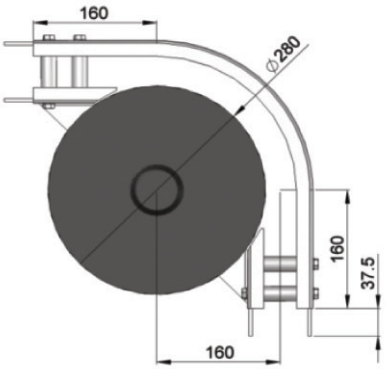

Ol G4j]
Chain required 2-way: 0.9 meter
Slide rail required 2-way: 1.7 meter

SM Wheel Bend 45°

SMWB-45R160A

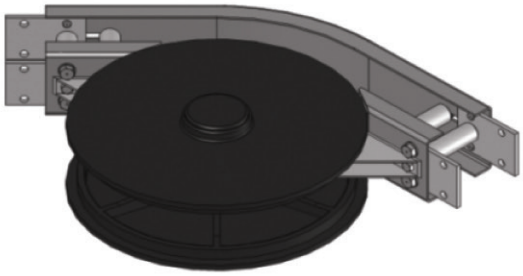

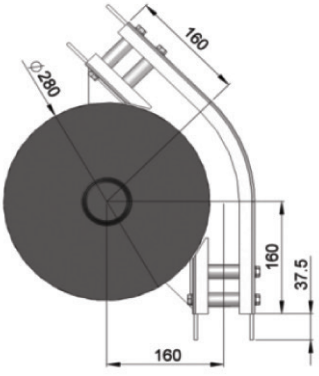

Ol G4j]
Chain required 2-way: 0.6 meter
Slide rail required 2-way: 1.2 meter

SM Wheel Bend 5° - 180°

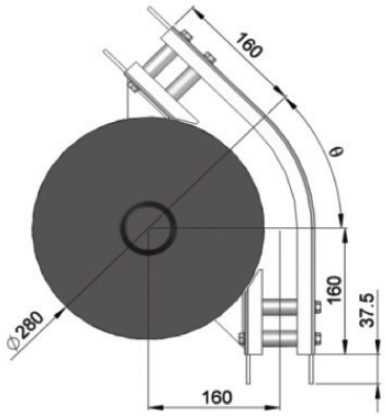

?r[gjf_`il MG Qb__f<_h^ l l^_ldha

- Wheel bend, Ø° ± 1°

If an angle of 65° is needed for wheel bend,
the ordering part number is

MG Q<'0/L+0*

HüÉ%âÔÊ/%âÉ≤y%‰%W› É≠ eÊy%â ¢≤ó%ð≤≤ÉoÊ≤ó%â¢≤
‹F #F°í ¸ ˜· í »%≤ó©%ãâ%| %Ô ÊâÉ%âyφWÊy
ˆ üÉ≤%/yÉ/¢≤ó

SM Horizontal Plain Bend 30°

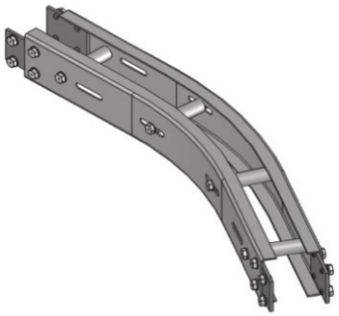

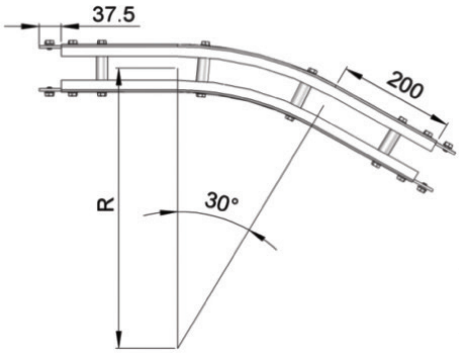

Bildi hr[fjf[dh_h^&-*ª∂+ª

R = 500 ± 10 mm **MG B<'-*L/****

R = 700 ± 10 mm **MG B<'-*L1****

Ol G4j]

Chain required 2-way (500, 700): 1.4, 1.6 meter

Slide rail required 2-way (500, 700): 2.8, 3.2 meter

SM Horizontal Plain Bend 45°

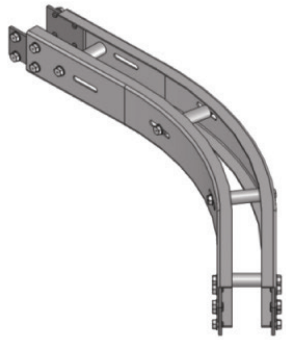

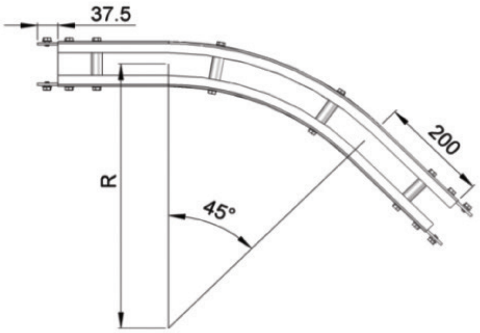

Bildi hr[fjf[dh_h^&/ª∂+ª

R = 500 ± 10 mm **MG B<'./L/****

R = 700 ± 10 mm **MG B<'./L1****

Ol G4j]

Chain required 2-way (500, 700): 1.6, 1.9 meter

Slide rail required 2-way (500, 700): 2.9, 3.3 meter

SM Horizontal Plain Bend 90°

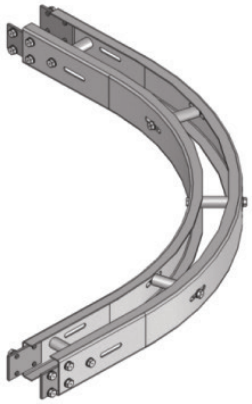

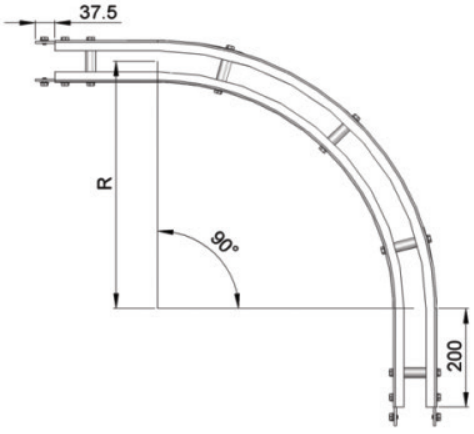

Bildi hr[fjf[dh_h^&3*ª∂+ª

R = 500 ± 10 mm **MG B<'3*L/****

R = 700 ± 10 mm **MG B<'3*L1****

Ol G4j]

Chain required 2-way (500, 700): 2.4, 3.0 meter

Slide rail required 2-way (500, 700): 4.8, 6.0 meter

SM Horizontal Plain Bend 5-180°

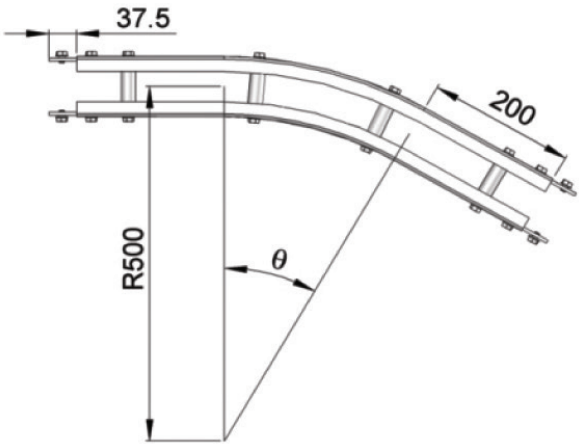

?r[g j f_ `i l MG Bi ldi hr[f Jf[dh <_h^ l l^_ldha

Bi ldi hr[f j f[dh \ _h^&ßª ∂ +ª

R = 500 ± 10 mm **MG B<'ß L/****

R = 700 ± 10 mm **MG B<'ß L1****

If an angle of 70° is needed for radius R500 horizontal plain bend, the ordering part number is

MG B<'1*L/**

Ol G4j]
Chain required 2-way (500, 700): meter (Variable to angle)
Slide rail required 2-way (500, 700): meter (Variable to angle)

SM Vertical Bend 5°

SMVB-5R400

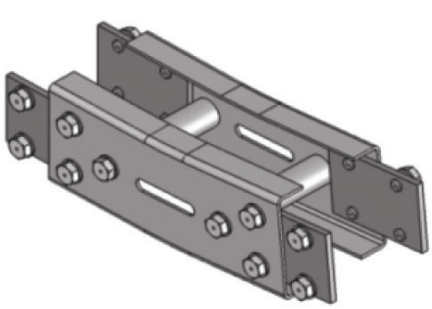

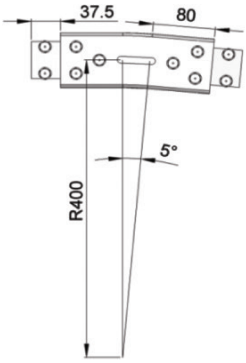

Ol G4j]
Chain required 2-way: 0.4 meter
Slide rail required 2-way: 0.8 meter

SM Vertical Bend 15°

SMVB-15R400

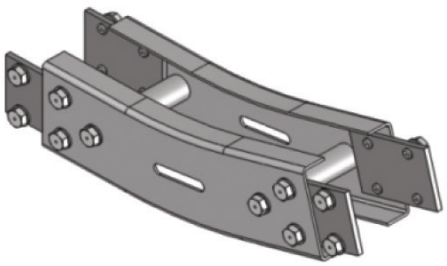

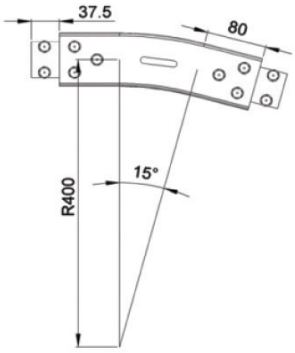

Ol G4j]
Chain required 2-way: 0.6 meter
Slide rail required 2-way: 1.1 meter

SM Vertical Bend 30°

SMVB-30R400

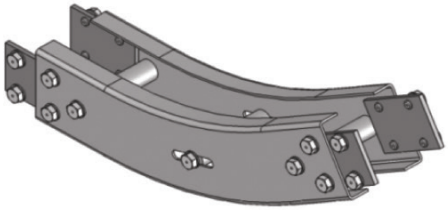

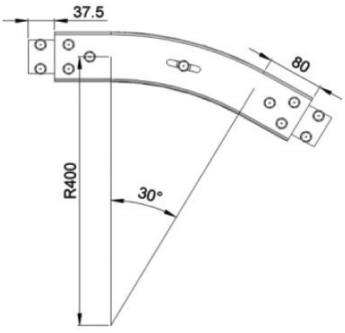

Ol G4j]
Chain required 2-way: 0.8 meter
Slide rail required 2-way: 1.5 meter

SM Vertical Bend 5° - 90°

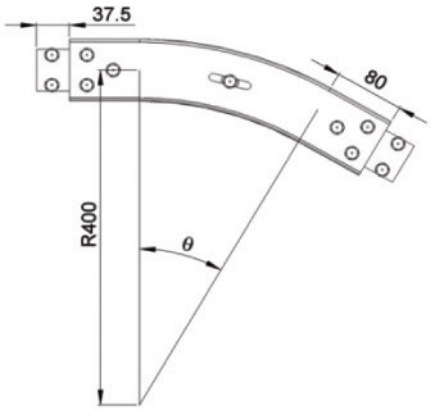

?r[g j f_ `i l MG P_lm] [f <_h^ l l^_lcha

- Vertical bend, Ø° ± 1°

If an angle of 25° is needed for vertical bend,
the ordering part number is

MG P<', / L. **

HüÉ%ÔÊÉ/%ÉÉ≤y%%W› É≠ e©Éy%Ô ¢≤ó%ò≤≤ÉoÊ≤ó%Ê¢≈
‹F #F°í ¸ ˜· í »%≤ó©Ê%ê%A|%Ô ÊÉ%Ê%y¢WÊÉy
ˆ üÉ≤%yÉ/¢≤ó

SM Horizontal beam support bracket – Stainless Steel

SAHBS-90M

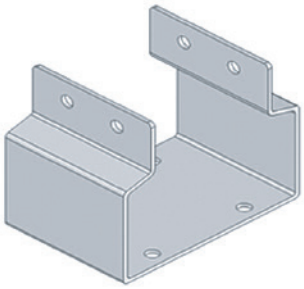

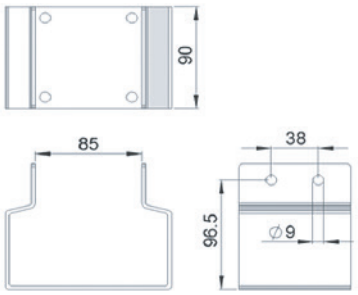

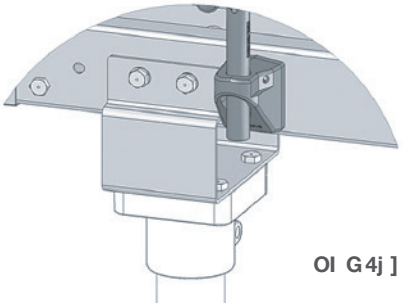

OI G4j]

SM Adjustable Angle Beam Support Bracket

SAHBS-90M-A35

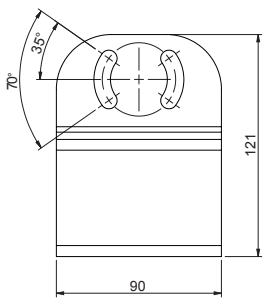

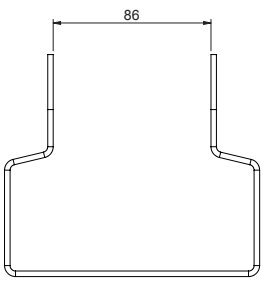

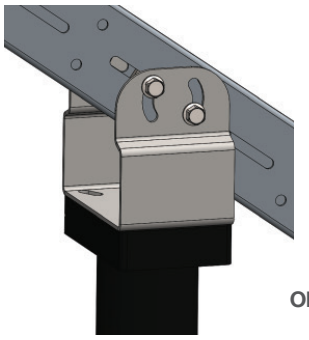

OI G4j]

SM Horizontal Tripod Support

SBSM-HXXXX, where XXXX = H Height (mm)

SM Adjustable Angle Tripod Support

SBSM-A-HXXXX, where XXXX = H Height (mm)

OI G4j]
Includes Beam Support Bracket

SC Series

M= M_lc_m4

<_[g Qc^rb4105 mm

Jli ^o]nQc^rb4Refer to Guide Rail Assembly

;]]_mmilc_mH__^_^4

Mfc^_L[dL_kod_^4FASR-25 OR FASR-25U

Mfc^_L[d=ifil4White or Natural Color

Mfc^_L[dG[n_ldf4HDPE OR UHMW

Mfc^_L[dLqp_m4FASLS-M5

Connecting strip is used to connect 2 beams.

=ihh_]mha MHlg4SACS-50x70

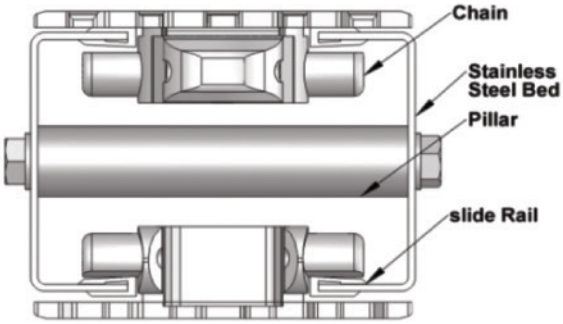

Conveyor Beam SCCB-LXXXX

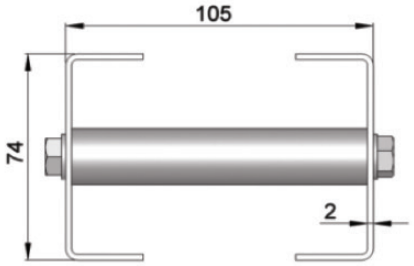

Qb_l_4
RRRR 7 F_harb 'g g #

Ol G4_[]b

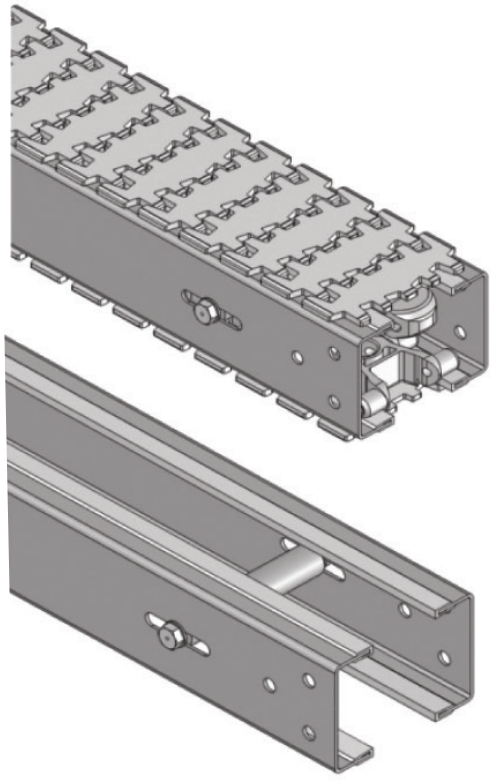

Chain Connecting Module SCCC-160

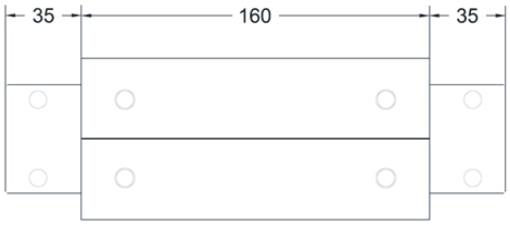

Connecting Strip – Stainless Steel

SACS-50x70

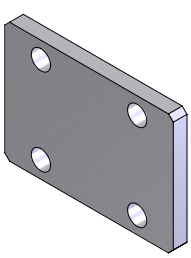

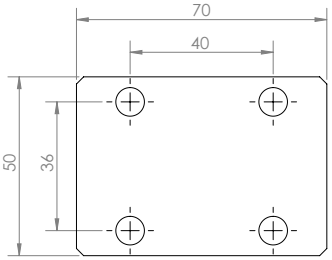

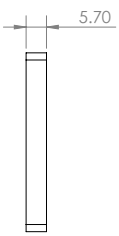

Ol G4j]

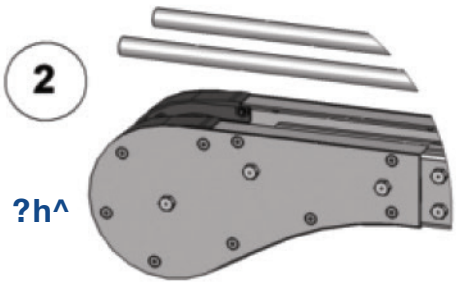

Cf_l ?h^

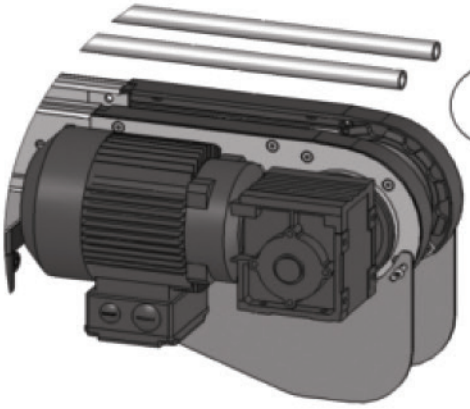

>d_]n>lcp_

Bildihn[f
<_[g Mbjjiln

Ngji^
Mhlo]nol_

=b[ch=i g g i h >[n[

J[ ] e[achaa4 5 m per box

Jcn] b4 35.5 mm

Q c^nb4 103 mm

Tensile Strength at 20°C: 6000N

=i fi l4 White & Black (Conductive)

G[n_l c[f4

=b[ch4 White Acetal / POM

Jcpi n4 Polyamide

Jcpi nJch4 Stainless Steel

Chm_l n"Q_^a_ @l c] mi h#4 TPE Grey

?r[g j f_`i l @==N/; +1'F

= 1 cleated top chain with alternate of # link of plain chain

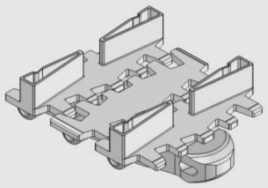

The above chain is FCCT-5A17-L1, 1 link cleated top chain with alternate of 1 link of plain chain.

Hi n_4 7 +&, &- & &/ì ((, *

Standard Plain Chain @=J='/

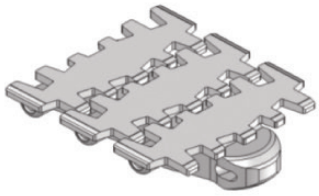

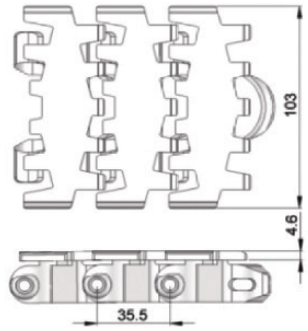

OI G4/ G_n_l) \i r

Application: Suitable for horizontal and slope < 5° transport of products with accumulation.

Conductive Chain @=J='/=>

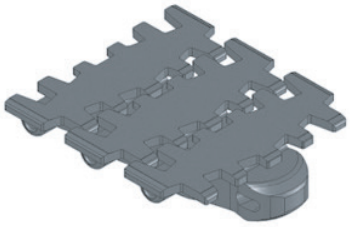

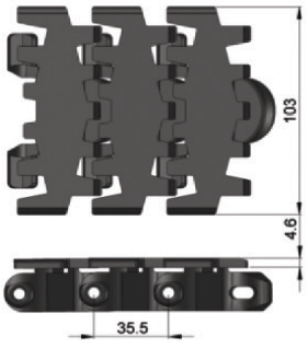

OI G4/ G_n_l) \i r

Application: Suitable for transport of static sensitive product.

Cleat Top Chain @==N/; -*'F

7 +&, &- & &/ì ((, *

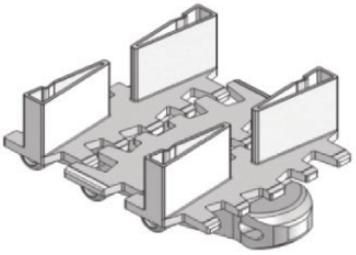

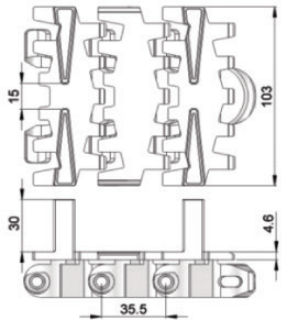

OI G4/ G_n_l) \i r

Application: Suitable for vertical transport of product with no accumulation.

Cleat Top Chain @==N/; +1'F

7 +&, &- & &/ì ((, *

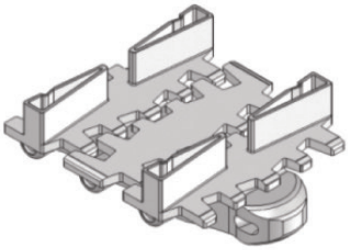

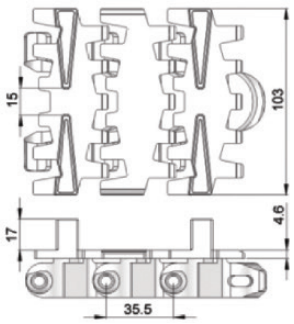

OI G4/ G_n_l) \i r

Application: Suitable for vertical transport of product with no accumulation.

Roller Top Chain @=LN/

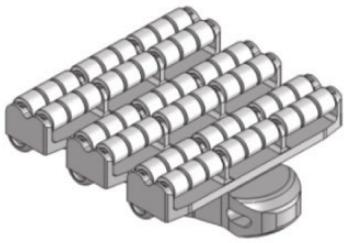

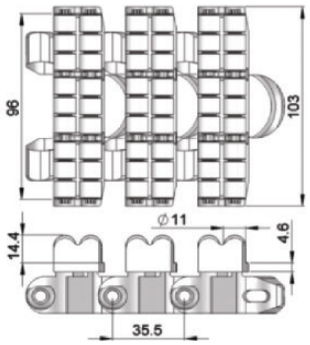

OI G4/ G_n_l) \i r

Application: Suitable for accumulation of product with low friction and pressure.

Roller Cleat Chain @=L='/;'F

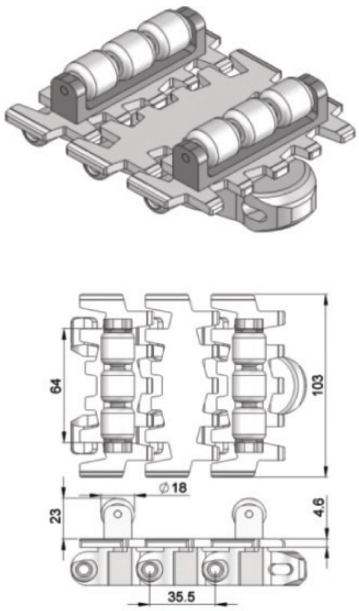

OI G4/ G_nl)\ir

Application: Suitable for vertical transportation of product in slope with no accumulation.

Roller Cleat Chain @=L='/<'F

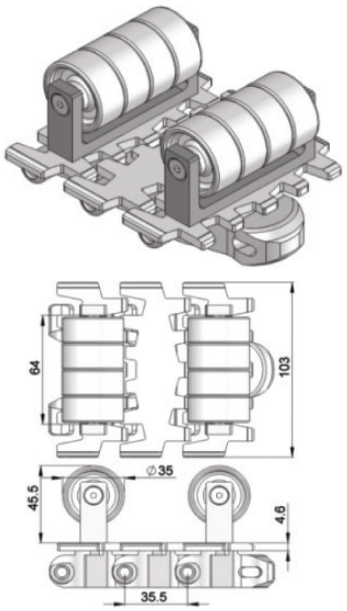

OI G4/ G_nl)\ir

Application: Suitable for vertical transportation of product in slope with no accumulation.

Friction Top Chain @=@N/

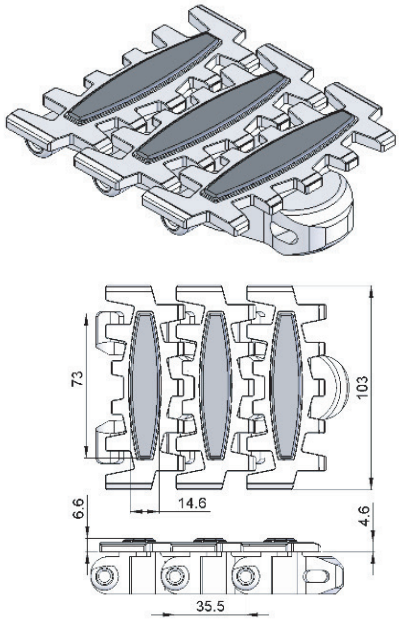

OI G4/ G_nl)\ir

Application: Suitable for transport product in slope > 5 ° but ≤ 30 ° without accumulation.

Friction Top Chain @=@N/;

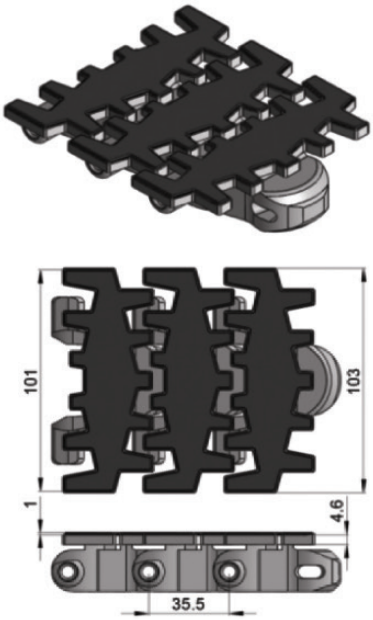

OI G4/ G_nl)\ir

Application: Suitable for transport product in slope > 5 ° but ≤ 30 ° without accumulation.

Friction Top Chain @=@N/<

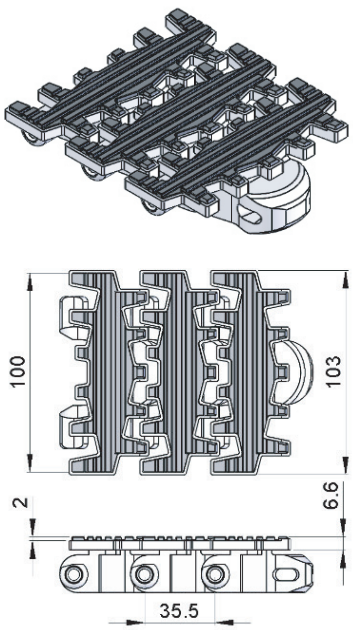

OI G4/ G_nl)\ir

Application: Suitable for transport product in slope > 5 ° but ≤ 40 ° without accumulation.

Friction Top Chain @=@N/=

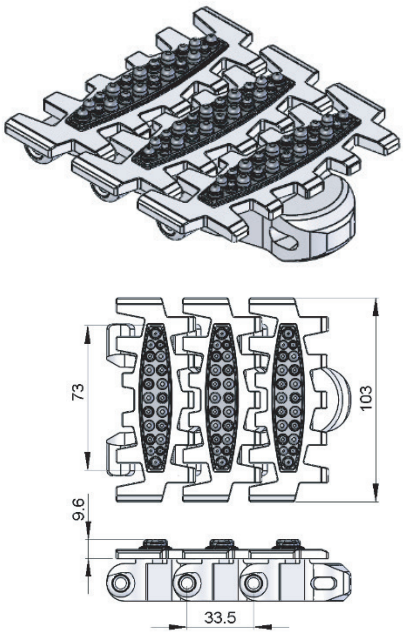

OI G4/ G_nl)\ir

Application: Suitable for transport product in slope > 5 ° but ≤ 35 ° without accumulation.

Hardened Steel Top Chain @=MN/

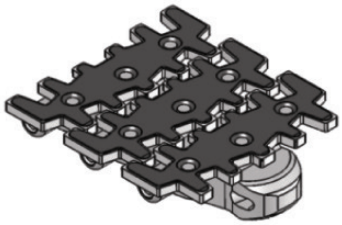

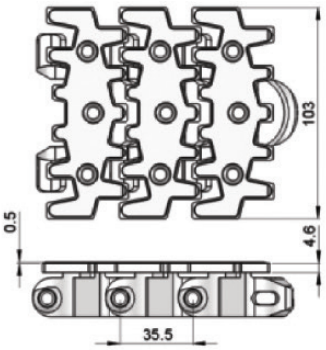

OI G4/ G_nl)\ir

Application: Suitable to transport metal products in accumulation.

Stainless Steel Top Chain @=MN/M

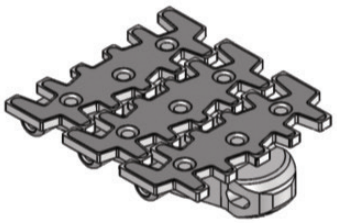

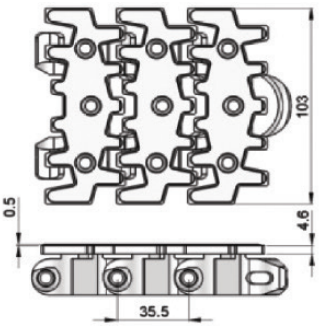

OI G4/ G_nl)\ir

Application: Suitable to transport metal products in accumulation.

Flocked Chain @=@E'/

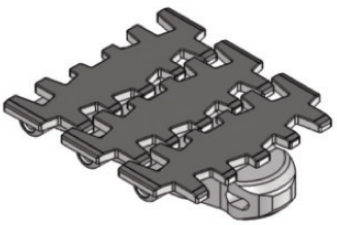

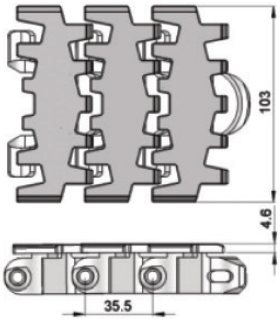

OI G4/ G_nl)\ir

Application: Suitable to transport lightweight, fragile and scratch sensitive product.

Safety Chain @=J='/P

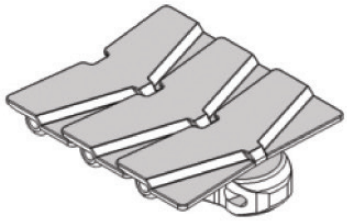

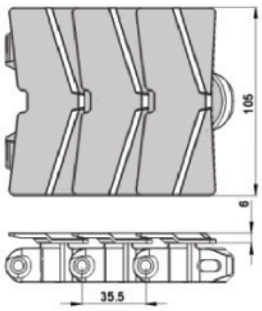

OI G4/ G_nl)\ir

Application: (Safety Chain) Suitable for horizontal and slope < 5° transport of products with accumulation.

Twist Chain @=J='/G

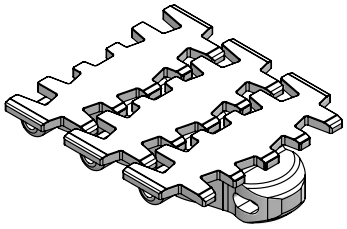

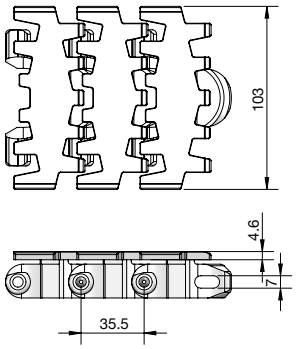

OI G4/ G_nl)\ir

Application: Suitable twist conveyor beam; horizontal and slope < 5° transport of products with accumulation

SC Direct End Drive without Motor "F?@N#

SCDD-A105-0L

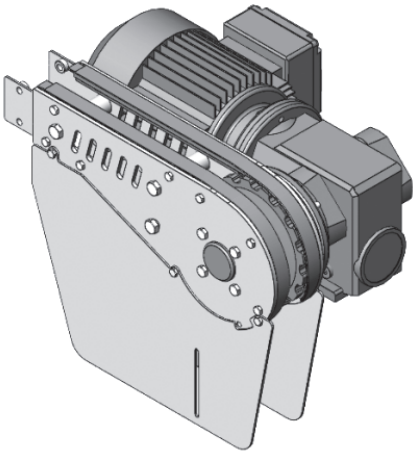

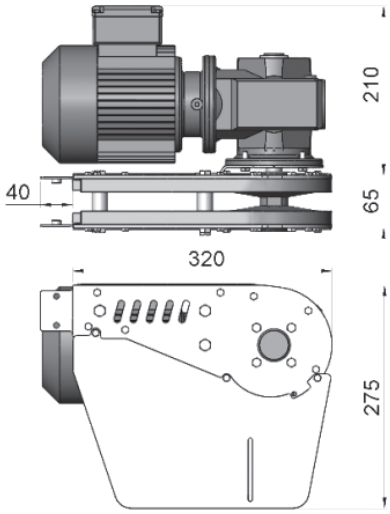

SC Direct End Drive without Motor "F?@N#

SCDD-A105-0R

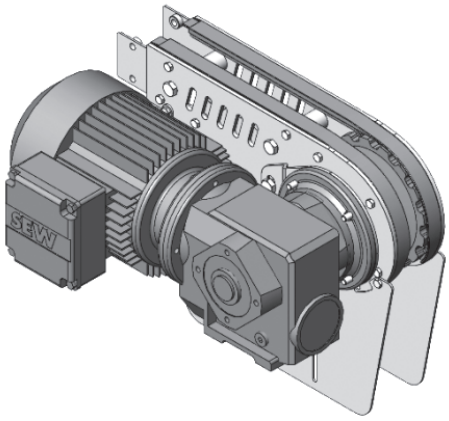

G[r N[]mch@il]_4+,/*H

The Direct End Drive Unit is without torque limiter. See page 66-67 for Gearmotor options.

OI G4j]

Chain required 2-way: 0.8 meter Slide rail required 2-way: 0.5 meter

SC Idler End-A105

SCIE-A105

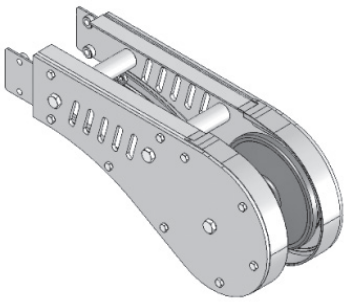

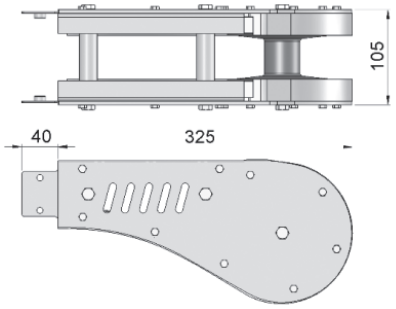

OI G4j]

Chain required 2-way: 0.8 meter

Slide rail required 2-way: 0.5meter

F&P %éÉW≠ ∂Ê∂/› %WÉ%∂y ÔoÊ %ê%F&P %Ô∂y/¢É

SC Wheel Bend 180°

SCWB-180R170A

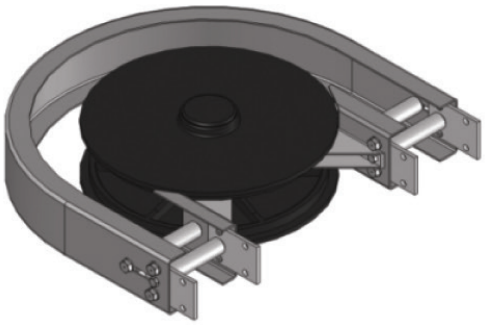

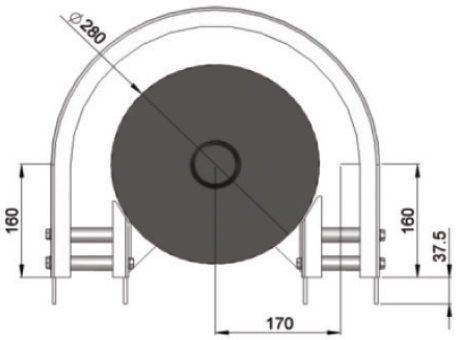

Ol G4j]
Chain required 2-way: 1.4 meter
Slide rail required 2-way: 2.8 meter

SC Wheel Bend 90°

SCWB-90R170A

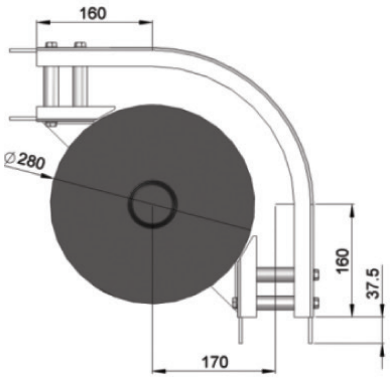

Ol G4j]
Chain required 2-way: 0.9 meter
Slide rail required 2-way: 1.7 meter

SC Wheel Bend 45°

SCWB-45R170A

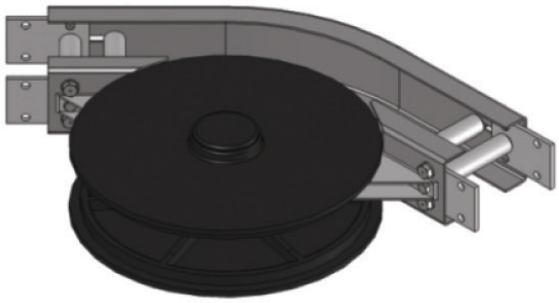

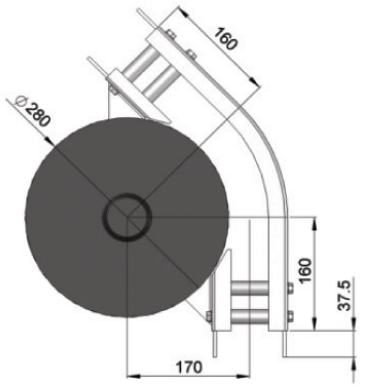

Ol G4j]
Chain required 2-way: 0.6 meter
Slide rail required 2-way: 1.2 meter

SC Wheel Bend 5° - 180°

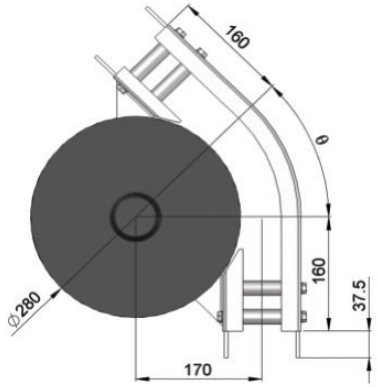

?r[g j f_ `i l M= Q b__f <_h^ l l^_lcha

- Wheel bend, Ø° ± 1°

If an angle of 65° is needed for wheel bend,
the ordering part number is

M= Q <' 0/ L +1*

HüÉ%ÔÊÉ/%ÉÉ≤y%%W › É≠ e©Éy%Ô ¢≤ó%ò≤≤ÉoÊ¢≤ó%Ê¢≈
‹F # F°í ¸ ˜ · í »%≤ó©Ê%ÊA | %Ô ÊÉ%Ê≤y ¢WÊÉy
ˆ üÉ≤%y É/¢≤ó

SC Horizontal Plain Bend 30°

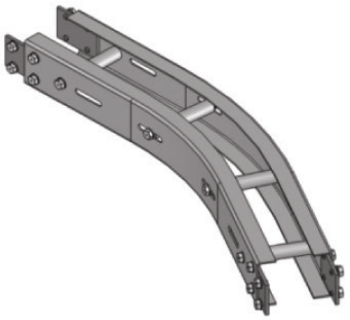

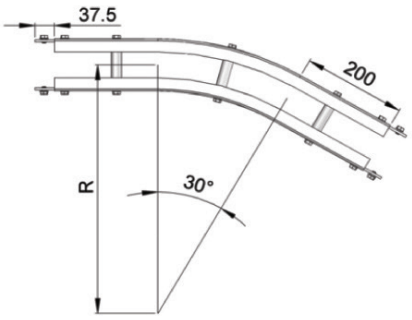

Bi ldi hr[f j f[dh \ _h^&-*ª ∂ +ª

R = 500 ± 10 mm M=B<'-*L/**

R = 700 ± 10 mm M=B<'-*L1**

Ol G4j]

Chain required 2-way (500, 700): 1.4, 1.6 meter

Slide rail required 2-way (500, 700): 2.8, 3.2 meter

SC Horizontal Plain Bend 45°

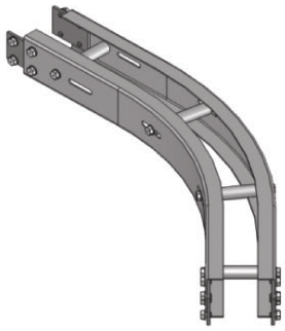

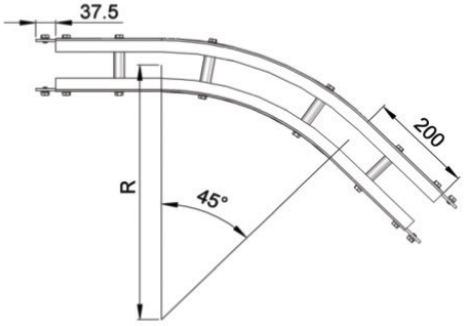

Bi ldi hr[f j f[dh \ _h^&./ª ∂ +ª

R = 500 ± 10 mm M=B<'./L/**

R = 700 ± 10 mm M=B<'./L1**

Ol G4j]

Chain required 2-way (500, 700): 1.6, 1.9 meter

Slide rail required 2-way (500, 700): 2.9, 3.3 meter

SC Horizontal Plain Bend 90°

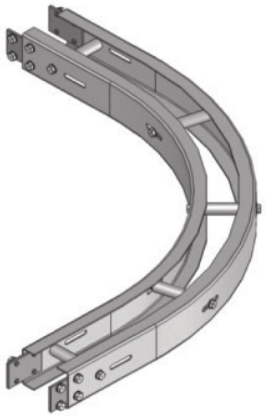

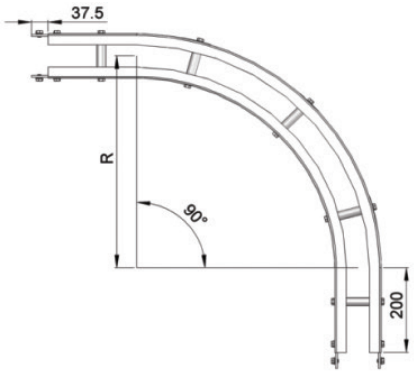

Bi ldi hr[f j f[dh \ _h^&3*ª ∂ +ª

R = 500 ± 10 mm M=B<'3*L/**

R = 700 ± 10 mm M=B<'3*L1**

Ol G4j]

Chain required 2-way (500, 700): 2.4, 3.0 meter

Slide rail required 2-way (500, 700): 4.8, 6.0 meter

SC Horizontal Plain Bend 5-180°

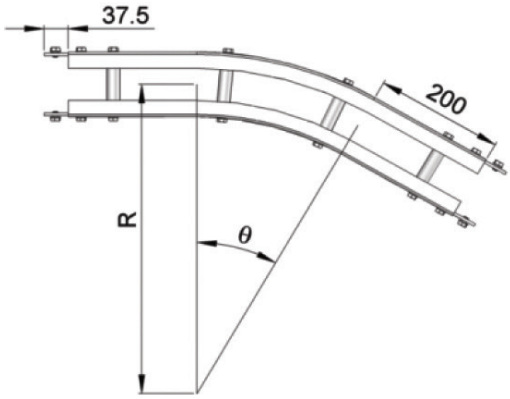

?r[g j f_ `i l M= Bi ldi hr[f Jf[dh <_h^ l l^_ldha

Bi ldi hr[f j f[dh \ _h^&ß ª ∂ +ª

R = 500 ± 10 mm M=B<'ßL/**

R = 700 ± 10 mm M=B<'ßL1**

If an angle of 70° is needed for radius R500 horizontal plain bend, the ordering part number is

M=B<'1*L/

Ol G4j]

Chain required 2-way (500, 700): meter (Variable to angle)

Slide rail required 2-way (500, 700): meter (Variable to angle)

SC Vertical Bend 5°

SCVB-5R400

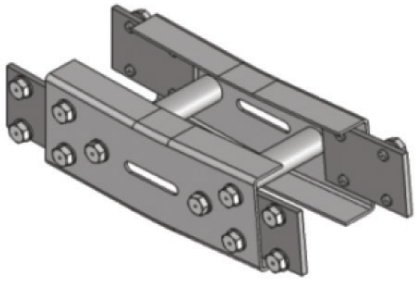

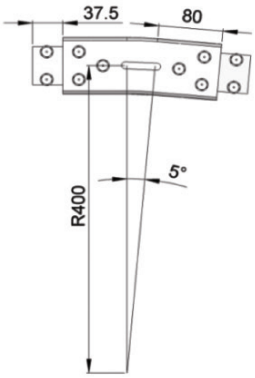

Ol G4j]
Chain required 2-way: 0.4 meter
Slide rail required 2-way: 0.8 meter

SC Vertical Bend 15°

SCVB-15R400

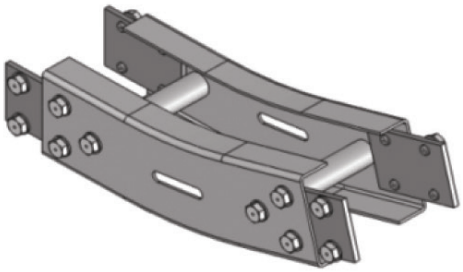

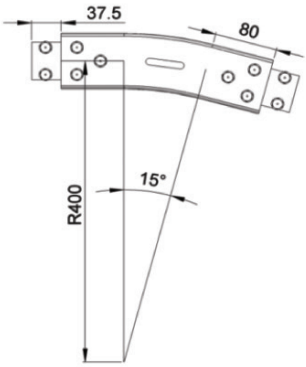

Ol G4j]
Chain required 2-way: 0.6 meter
Slide rail required 2-way: 1.1 meter

SC Vertical Bend 30°

SCVB-30R400

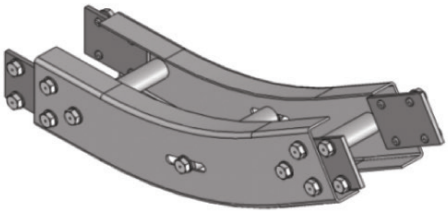

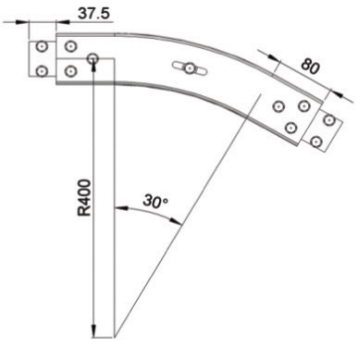

Ol G4j]
Chain required 2-way: 0.8 meter
Slide rail required 2-way: 1.5 meter

SC Vertical Bend 5° - 90°

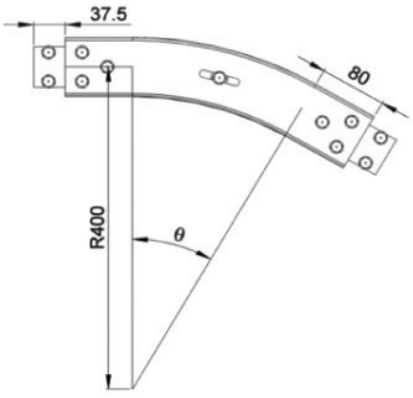

?r[g j f_ `i l M= P_lm][f<_h^ l l^_lcha

- Vertical bend, Ø° ± 1°

If an angle of 25° is needed for vertical bend,
the ordering part number is

M=P<', /L. **

HüÉ%ÔÉ/%Ó≤y%%W› É≠ e©y%Ô ¢≤ó%∂≤≤ÉoÊ≤ó%Ê¢≈
‹F #F°í ¸ ˜· í »%≤ó©%A|%Ô ÊoÉ%y¢WÉy
ˆ üÉ≤%y É/¢≤ó

SC Horizontal beam support bracket – Stainless Steel — SAHBS-90C

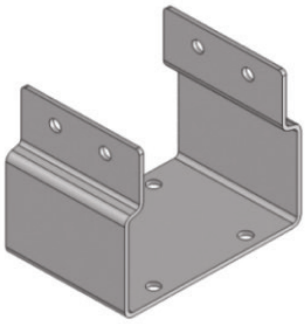

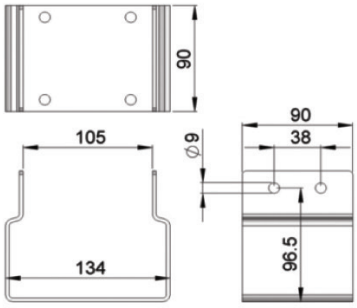

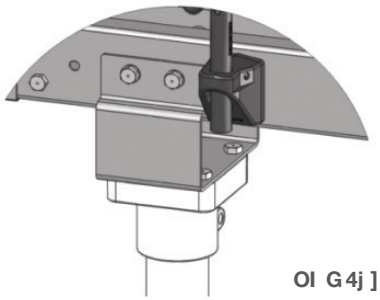

OI G4j]

SC Adjustable Angle Beam Support Bracket — SAHBS-90C-A35

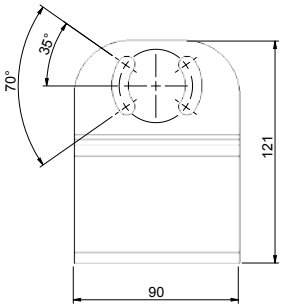

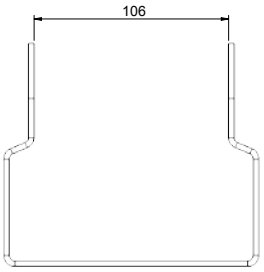

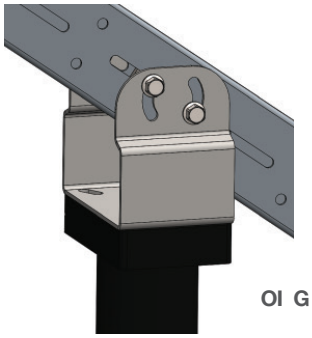

OI G4j]

SC Adjustable Angle Tripod Support — SBSC-HXXXX, where XXXX = H Height (mm)

SC Horizontal Tripod Support — SBSC-A-HXXXX, where XXXX = H Height (mm)

OI G4j]
Includes Beam Support Bracket

SU Series

MO M_lc_m4

<_[g Qc^rb4179 mm

Jli ^o] nQc^rb4Refer to Guide Rail Assembly

;]]_mmilc_mH__^_^4

Mfc^_ L[dL_kodc_^4FASR-25, FASR-25U, FASR-25X

Mfc^_ L[d=ifil4White or Natural Color

Mfc^_ L[dG[n_ldcf4HDPE, UHMWPE or Special PE

Mfc^_ L[dLqp_m4FASLS-M5

Connecting strip is used to connect two beams.

=ihh_]nchaMHdj4SACS-50x70

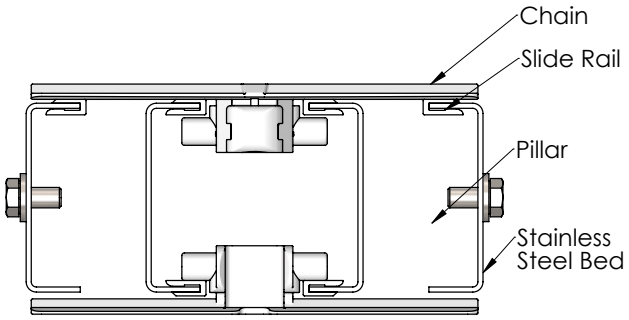

Conveyor Beam SUCB-LXXXX

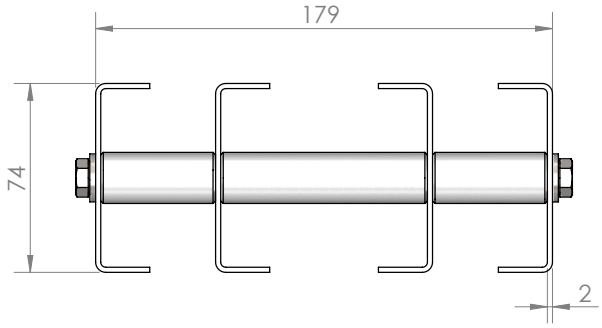

Qb_l_4
RRRR 7 F_harb 'g g #

Ol G4_[]b

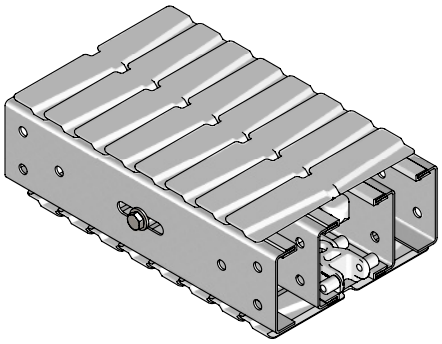

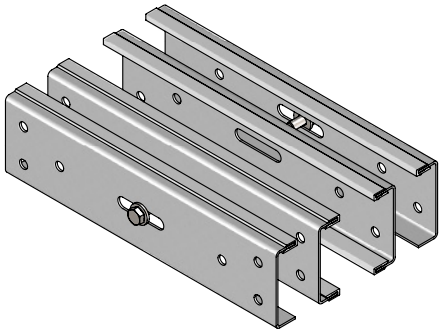

Chain Connecting Module SUCC-300

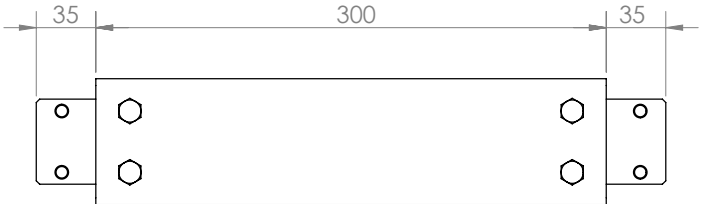

Connecting Strip – Stainless Steel

SACS-50x70

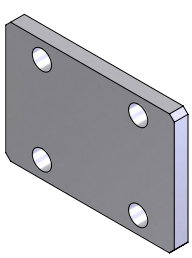

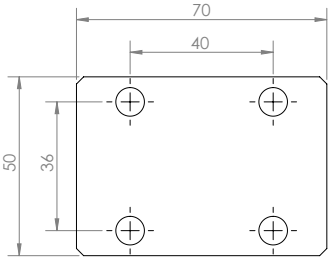

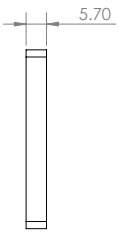

Ol G4j]

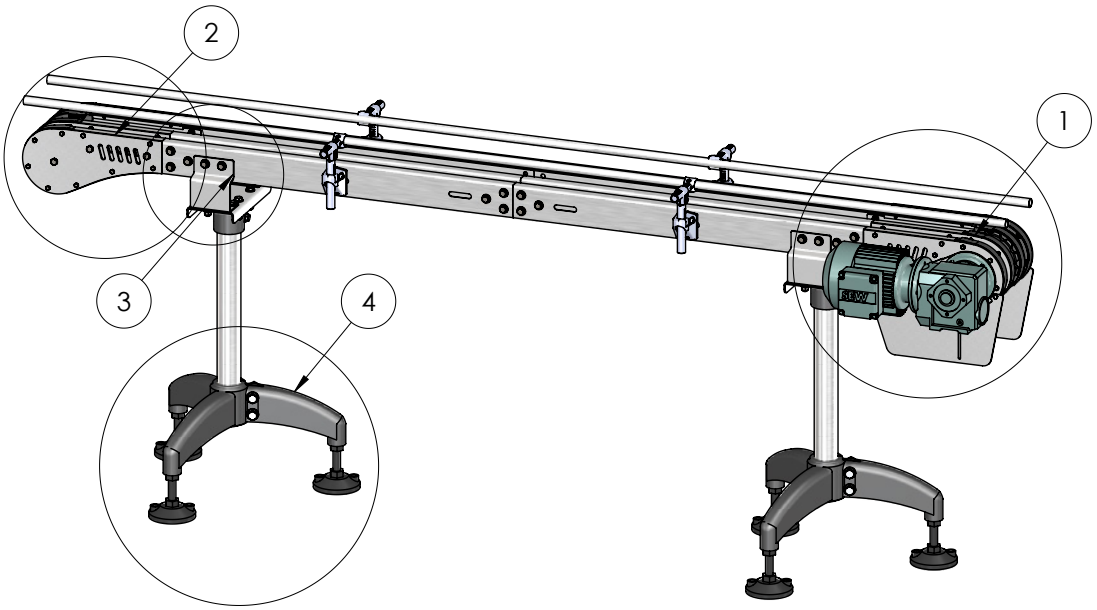

2

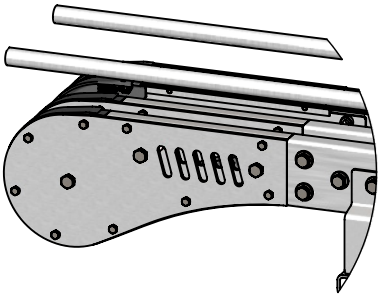

Cf_l ?h^

1

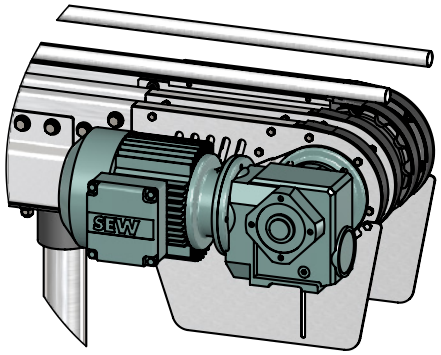

>d_]n>lcp_

3

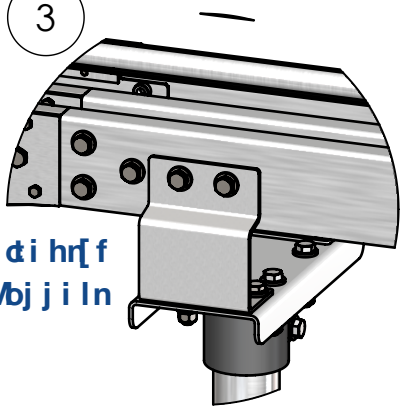

Bildihr[f
<_[g Mbjjiln

4

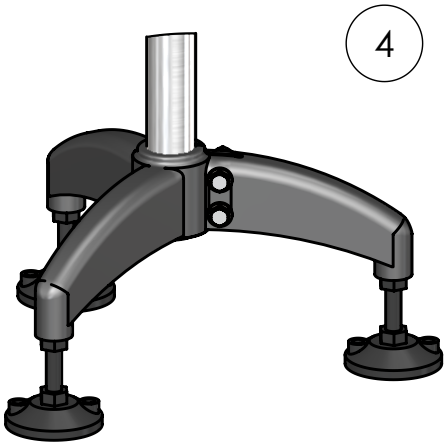

Ngi^
Mhlo]mol_

=b[dh =i g g i h >[n[

J[ ] e[adha4: 5 m per box

J oc] b: 33.5 mm

Q c^nb: 175 mm

Tensile Strength at 20°C: 6000N

=i fi l: White

G[n_l d[f4

=b[dh4: White Acetal / POM

J opi n4: Polyamide

J opi nJ dh4: Stainless Steel

Chm_l n"Q_^a_ @l d] mi h#4: TPE Grey

Plain Chain @OJ=' /

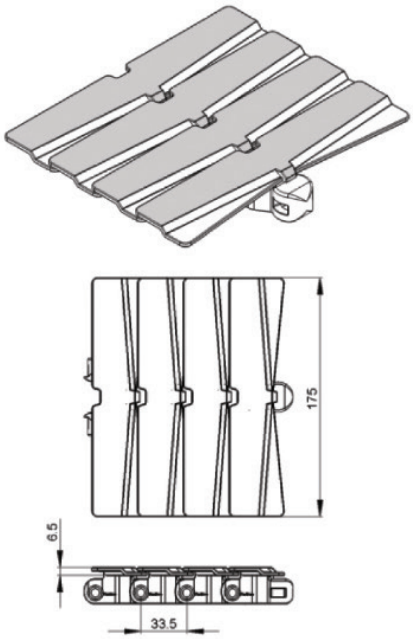

OI G4/ G_n_l) \ i r

Application: Suitable for horizontal and slope < 5° transport of products with accumulation.

Roller Plain Chain @OJ=' / L

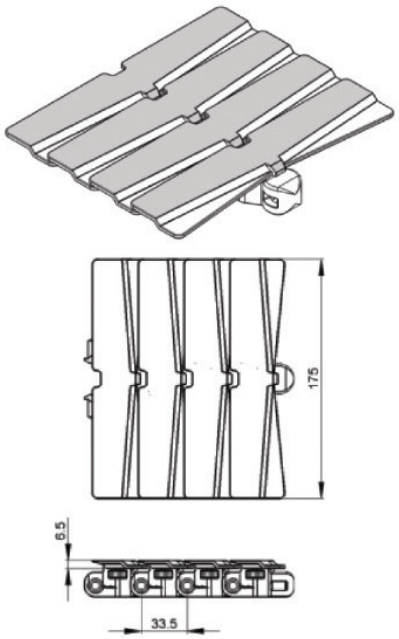

OI G4/ G_n_l) \ i r

Application: Suitable for horizontal and slope < 5° transport of products with accumulation.

Hi n_4@l d] mi h L_^o] dha Li ff_l =b[dh l_] i g g _h^_^ `i l bcab mj __^ i l bcab fi [^ j f[dh \ _h^m

Friction Top Chain @O@N /

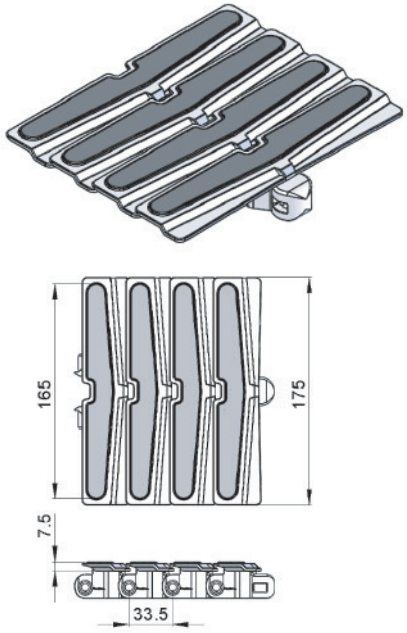

OI G4/ G_n_l) \ i r

Application: Suitable for horizontal and slope ≤ 30° transport of products without accumulation.

Roller Friction Top Chain @O@N / L

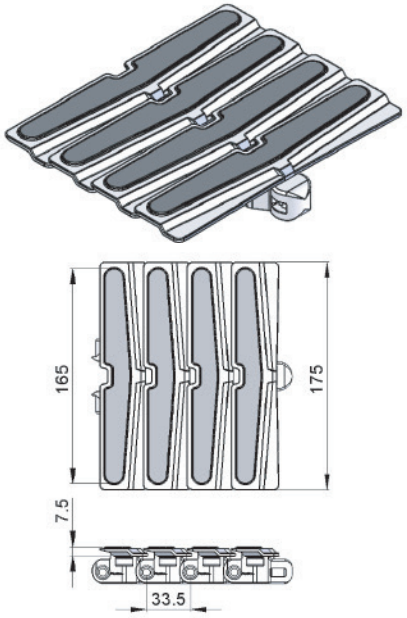

OI G4/ G_n_l) \ i r

Application: Suitable for horizontal and slope ≤ 30° transport of products without accumulation.

Hi n_4@l d] mi h L_^o] dha Li ff_l =b[dh l_] i g g _h^_^ `i l bcab mj __^ i l bcab fi [^ j f[dh \ _h^m

Twist Chain @OJ=' / G

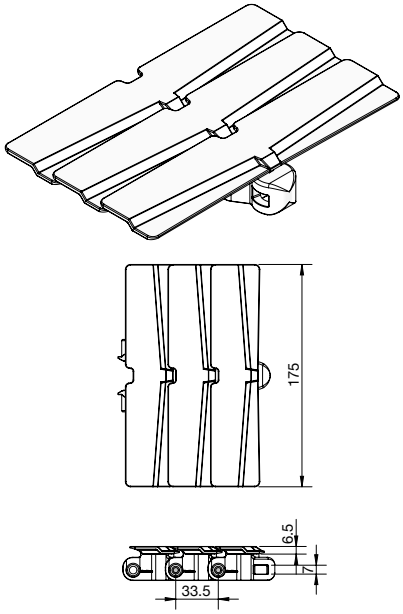

OI G4/ G_n_l) \ i r

Application: Suitable twist conveyor beam; horizontal and slope < 5° transport of products with accumulation.

SU Direct End Drive without Motor 'F?@N#

SUDD-A180-0L

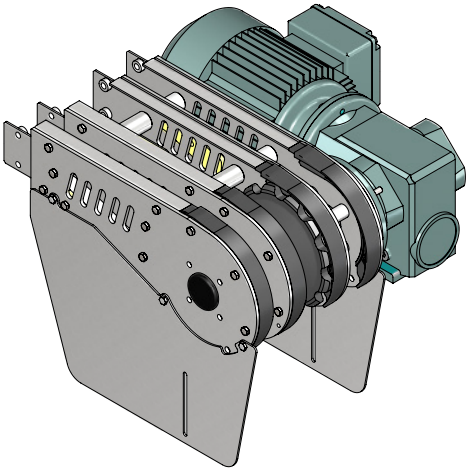

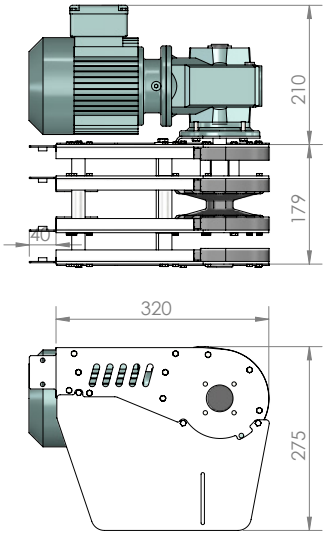

SU Direct End Drive without Motor 'LCABN#

SUDD-A180-0R

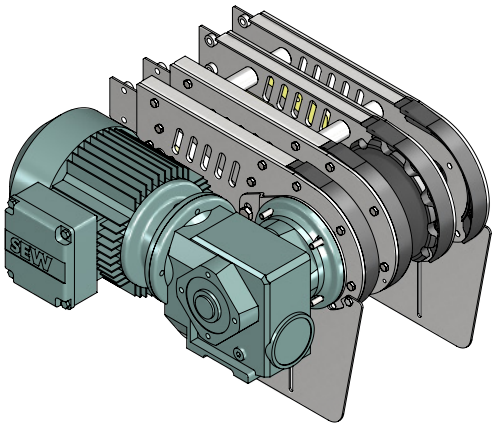

G[r N[]mci h@i l]_4+, /*H

The Direct End Drive Unit is without torque limiter. See page 66-67 for Gearmotor options.

Ol G4j]

Chain required 2-way: 0.8 meter Slide rail required 2-way: 0.9 meter

SU Idler End-A180

SUIE-A180

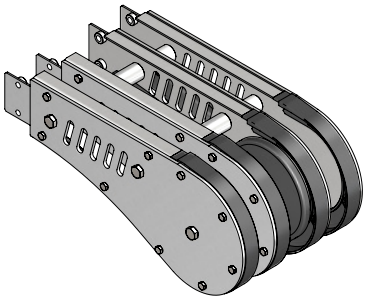

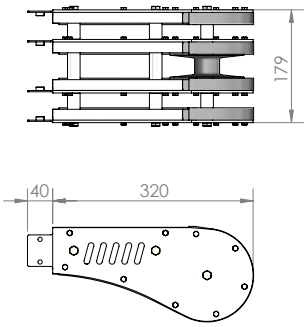

Ol G4j]

Chain required 2-way: 0.8 meter

Slide rail required 2-way: 0.9 meter

SU Horizontal Plain Bend 30°

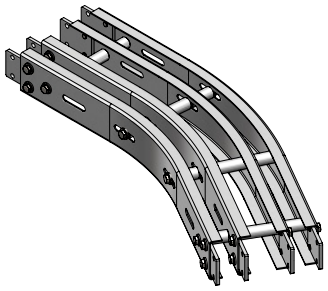

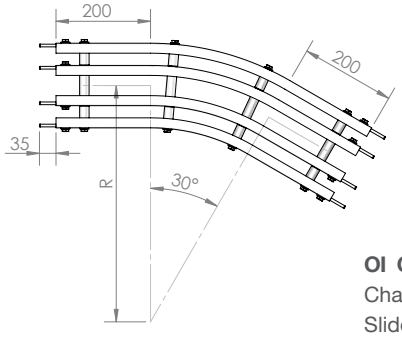

Bestellbeispiel:

R = 500 ± 10 mm	MOB<'-*L/**
R = 700 ± 10 mm	MOB<'-*L1**
R = 1000 ± 10 mm	MOB<'-*L+***

Hinweis:
Chain required 2-way (500, 700, 1000): 1.4, 1.6, 1.9 meter
Slide rail required 2-way (500, 700, 1000): 4.0, 4.7, 5.6 meter

SU Horizontal Plain Bend 45°

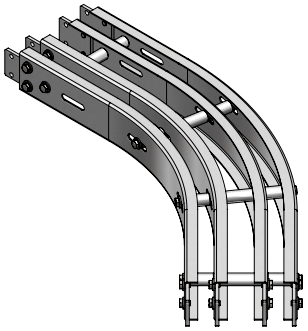

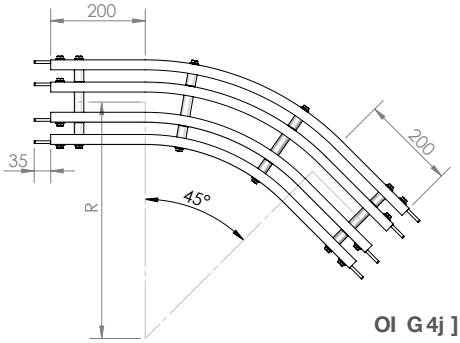

Bestellbeispiel:

R = 500 ± 10 mm	MOB<'.*L/**
R = 700 ± 10 mm	MOB<'.*L1**
R = 1000 ± 10 mm	MOB<'.*L+***

Hinweis:
Chain required 2-way (500, 700, 1000): 1.6, 2.0, 2.4 meter
Slide rail required 2-way (500, 700, 1000): 4.8, 5.8, 7.2 meter

SU Horizontal Plain Bend 90°

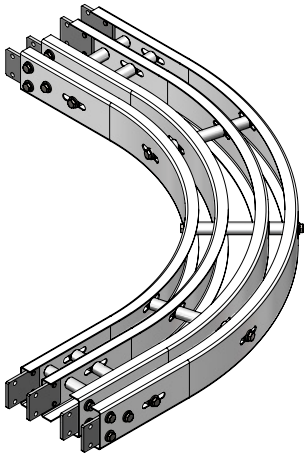

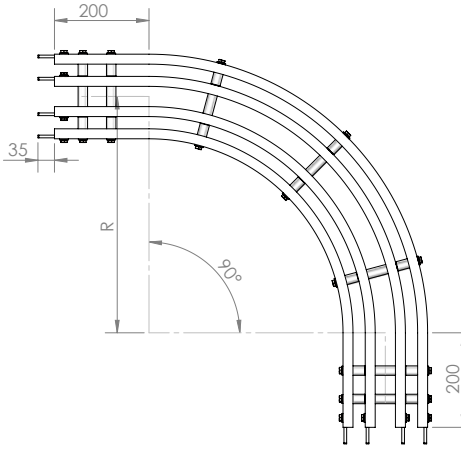

Bestellbeispiel:

R = 500 ± 10 mm	MOB<'3*L/**
R = 700 ± 10 mm	MOB<'3*L1**
R = 1000 ± 10 mm	MOB<'3*L+***

Hinweis:
Chain required 2-way (500, 700, 1000): 2.4, 3.1, 4.0 meter
Slide rail required 2-way (500, 700, 1000): 7.2, 9.1, 12.0 meter

SU Horizontal Plain Bend 5-180°

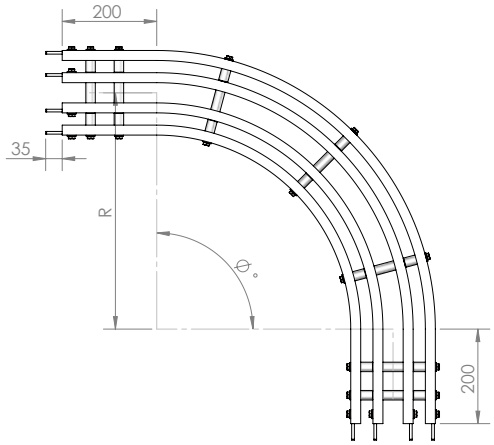

?r[gjf_`il MOBildtihr[fJf[dh<_h^ll^_ldha

Bildtihr[fjf[dh_h^&ßª∂+ª

R = 500 ± 10 mm **MOB<'ßL/****

R = 700 ± 10 mm **MOB<'ßL1****

R = 1000 ± 10 mm **MOB<'ßL+*****

If an angle of 120° is needed for radius R500 horizontal plain bend, the ordering part number is

MOB<'1*L/**

OI G4j]

Chain required 2-way (500, 700, 1000): meter (Variable to angle)

Slide rail required 2-way (500, 700, 1000): meter (Variable to angle)

SU Vertical Bend 5° SUVB-5R400

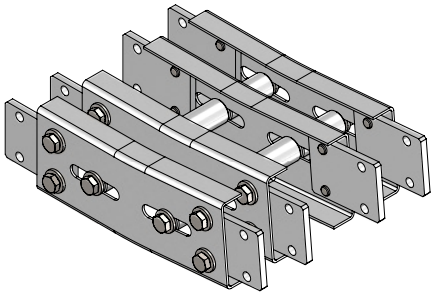

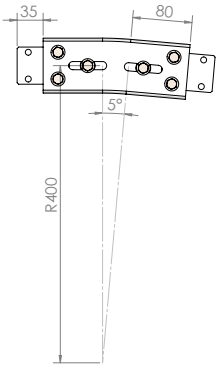

OI G4j]

Chain required 2-way: 0.4 meter

Slide rail required 2-way: 1.6 meter

SU Vertical Bend 15° SUVB-15R400

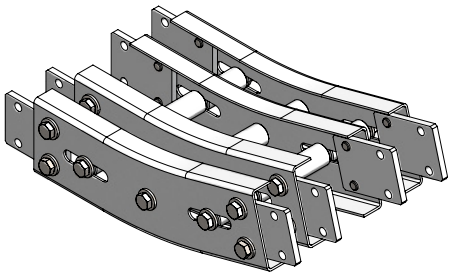

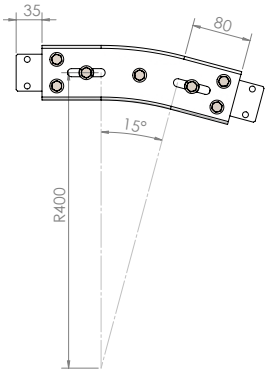

OI G4j]

Chain required 2-way: 0.6 meter

Slide rail required 2-way: 2.2 meter

SU Vertical Bend 30° SUVB-30R400

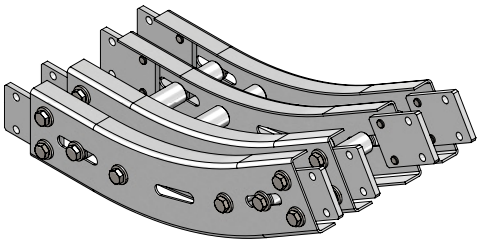

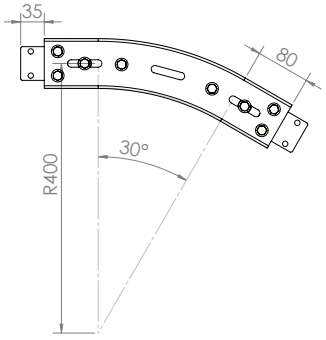

OI G4j]

Chain required 2-way: 0.8 meter

Slide rail required 2-way: 3.0 meter

SU Vertical Bend 5° - 90°

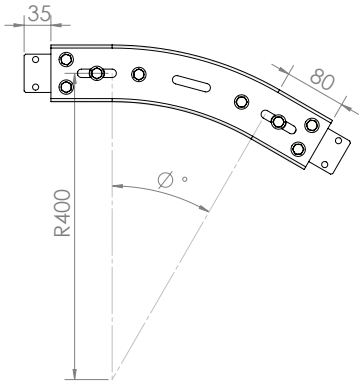

?r[g j f_ `i l MO P_lm] [f <_h^ l l^_lcha

- Vertical bend, Ø° ± 1°

If an angle of 25° is needed for vertical bend,
the ordering part number is

MOP<', / L. **

HüÉ%ÔÊÉ/%ÉÉ≤y%%W› É≠ e©Éy%Ô ¢≤ó%ò≤≤ÉoÊ¢≤ó%Ê¢≈
‹F #F°í ¸ ˜· í »%≤ó©Éº%ê%A|%Ô ÊÉ%Éy¢ÓWÊÉy
ˆ üÉ≤%yÉ/¢≤ó

SU Horizontal beam support bracket – Stainless Steel

SAHBS-90

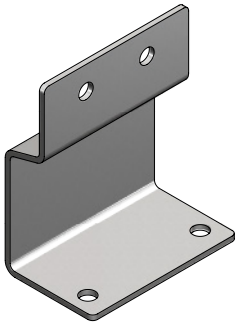

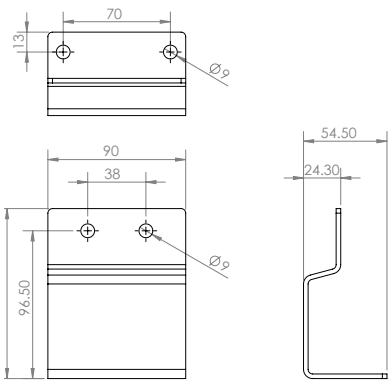

OI G4j]

SU Horizontal Tripod Support

SBSU-HXXXX, where XXXX = H Height (mm)

SU Adjustable Angle Tripod Support

SBSU-A-HXXXX, where XXXX = H Height (mm)

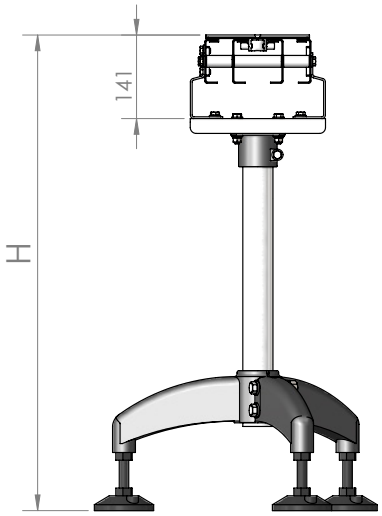

OI G4j]
Includes Beam Support Brackets

SV Series

MP M_l c_m4

<_[g Q c^rb4260 mm

Jli ^o] nQ c^rb4Refer to Guide Rail Assembly

;]] _mmi l c_mH__^_^4

Mfc^_ L[d L_kod_^4FASR-25, FASR-25U, FASR-25X

Mfc^_ L[d =i fi l4White or Natural Color

Mfc^_ L[d G[n_l d f4HDPE, UHMWPE or Special PE

Mfc^_ L[d L op_m4FASLS-M5

Connecting strip is used to connect two beams.

=i hh_] mcha MHdj 4SACS-50x70

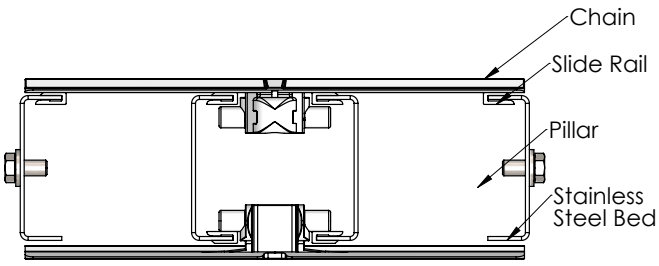

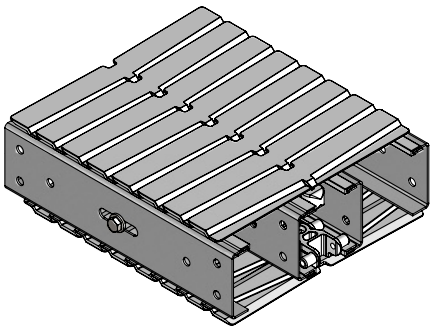

Conveyor Beam SVCB-LXXXX

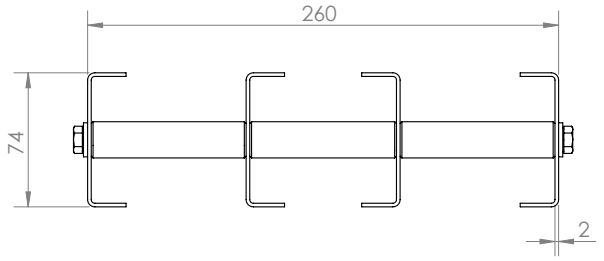

Qb_l_4
RRRR 7 F_harb "g g #

OI G4_[ ] b

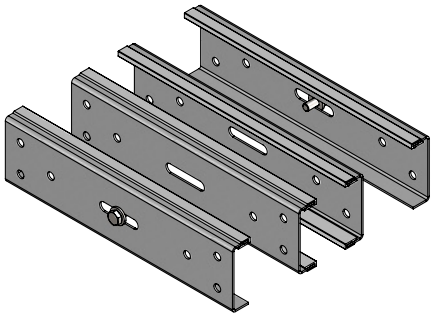

Chain Connecting Module SVCC-300

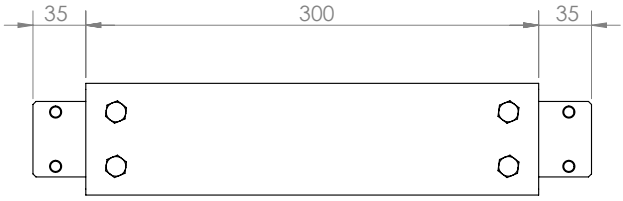

Connecting Strip – Stainless Steel

SACS-50x70

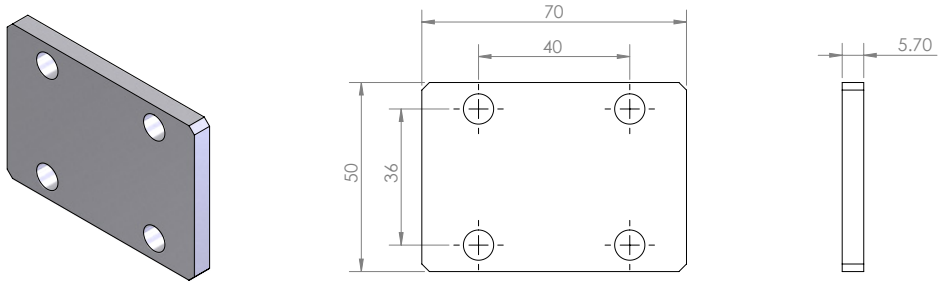

OI G4j]

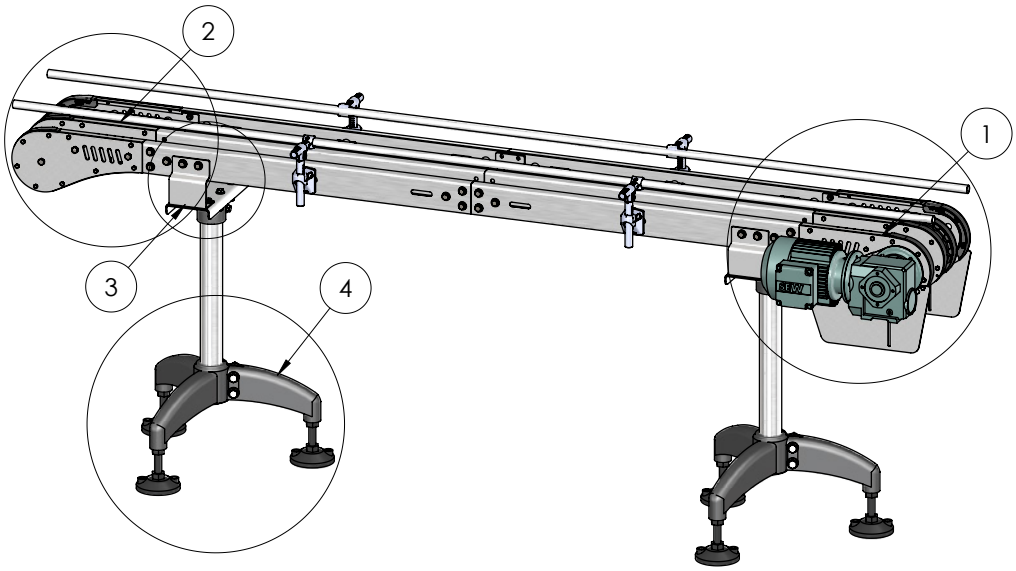

2

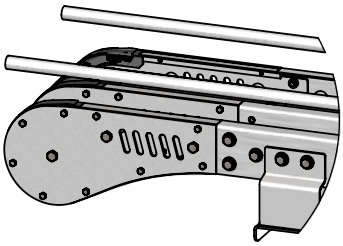

Cf_l ?h^

1

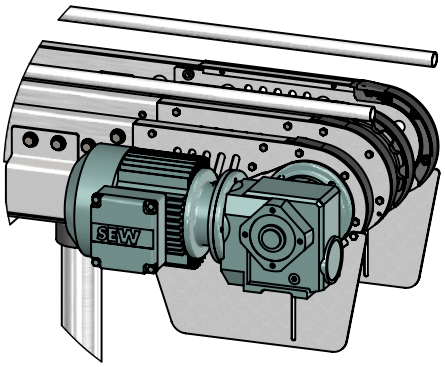

>d_]n>lφ_

3

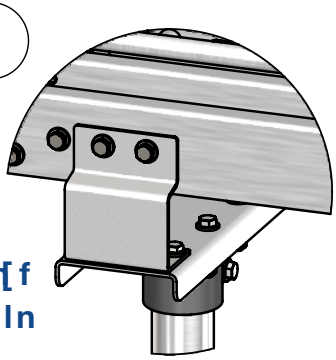

Bildihf[
<_[g Mbjjiln

4

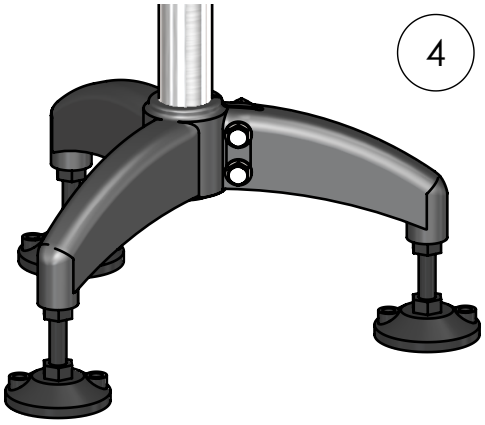

Ngji^
Mflo]mol_

=b[dh =i g g i h >[n[

J[ ] e[adha45 m per box

Jocj b: 33.5 mm

Q c^rb: 255 mm

Tensile Strength at 20°C: 6000N

=i fi l: White

G[n_l ¢f4

=b[dh4White Acetal / POM

Jopi m4Polyamide

Jopi nJdh4Stainless Steel

Qmln"Q_^a_ @¢qmi h#4TPE Grey

Plain Chain @PJ='/

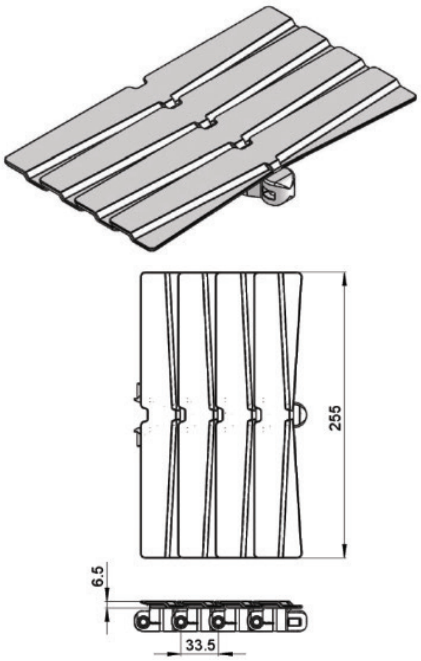

OI G4/ G_n_l)\ir

Application: Suitable for horizontal and slope < 5° transport of products with accumulation.

Roller Plain Chain @PJ='/L

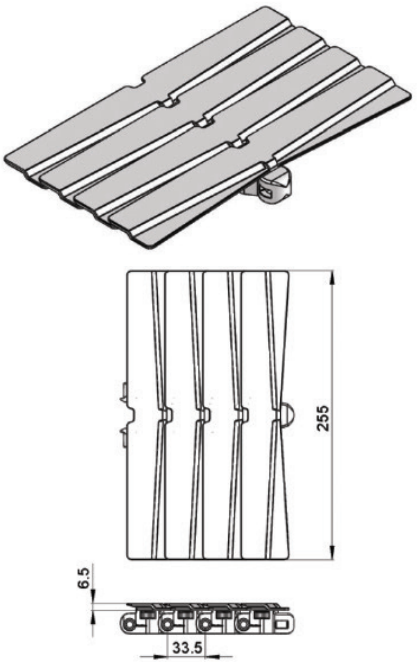

OI G4/ G_n_l)\ir

Application: Suitable for horizontal and slope < 5° transport of products with accumulation.

Hin_4@¢qmi h L_^o]dha Liff_l =b[dh l_]i g g _h^_^`il bcabmj__^ il bcabfi[^jf[dh_h^m

Friction Top Chain @P@N/

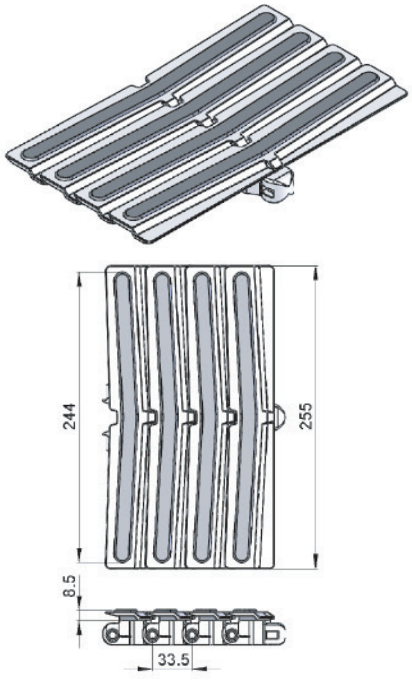

OI G4/ G_n_l)\ir

Application: Suitable for horizontal and slope ≤ 30° transport of products without accumulation.

Roller Friction Top Chain @P@N/L

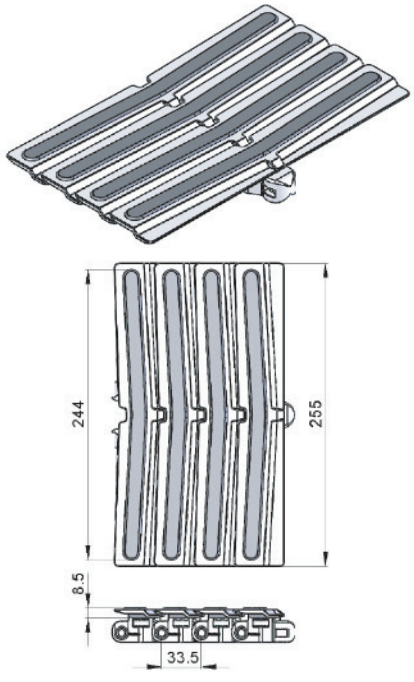

OI G4/ G_n_l)\ir

Application: Suitable for horizontal and slope ≤ 30° transport of products without accumulation.

Hin_4@¢qmi h L_^o]dha Liff_l =b[dh l_]i g g _h^_^`il bcabmj__^ il bcabfi[^jf[dh_h^m

Twist Chain @PJ='/G

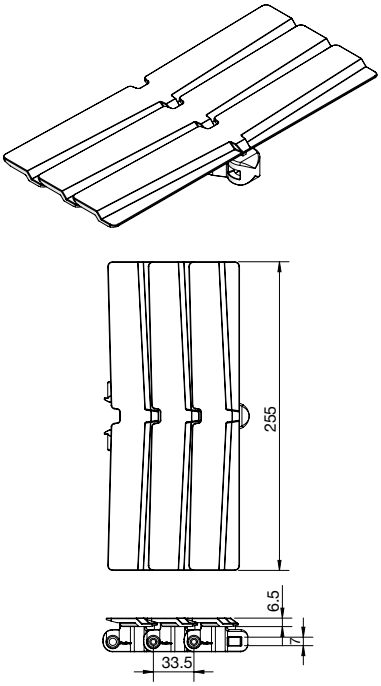

OI G4/ G_n_l)\ir

Application: Suitable twist conveyor beam; horizontal and slope < 5° transport of products with accumulation.

SV Direct End Drive without Motor "F?@N#

SVDD-A260-0L

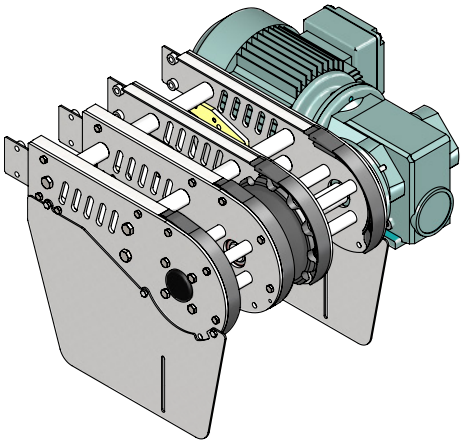

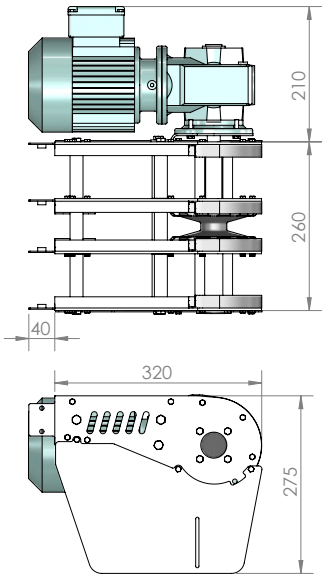

SV Direct End Drive without Motor "LOABN#

SVDD-A260-0R

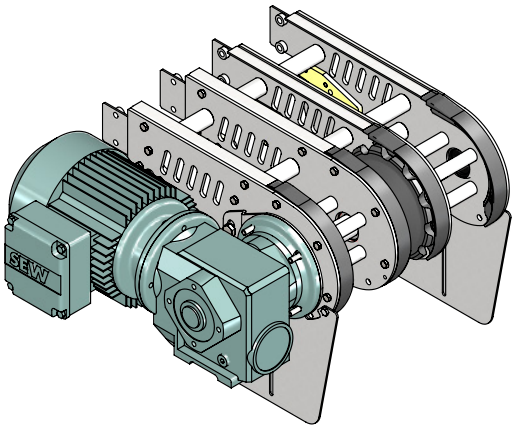

G[r N[]mch@il]_4+,/*H

The Direct End Drive Unit is without torque limiter. See page 66-67 for Gearmotor options.

OI G4j]

Chain required 2-way: 0.8 meter Slide rail required 2-way: 0.9 meter

SV Idler End-A260

SVIE-A260

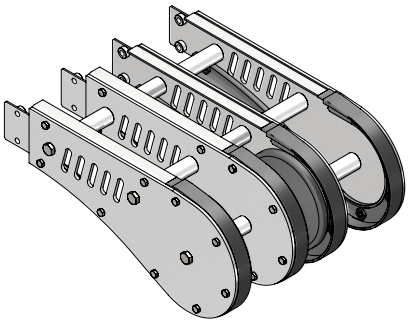

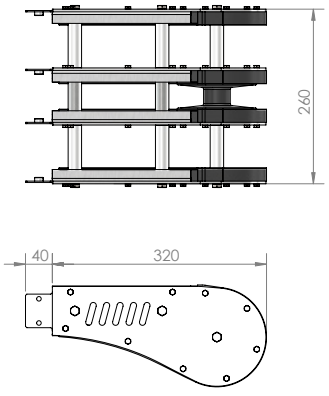

OI G4j]

Chain required 2-way: 0.8 meter

Slide rail required 2-way: 0.9 meter

F&P %éW≠ ∂Ê∂/› %WÉ%/∂y ÔoÊ %ê%F&P %Ô∂y/¢É

SV Horizontal Plain Bend 30°

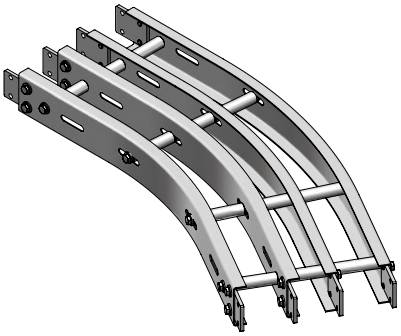

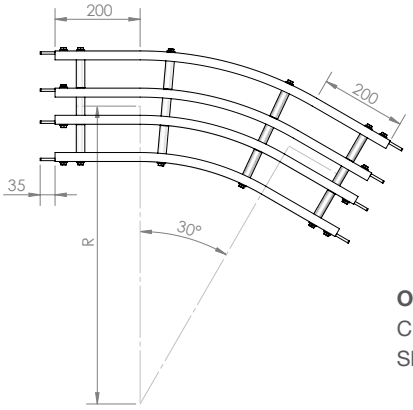

Bi ldi hr[fj f[dh \ _h^&-*ª ∂ +ª

R = 700 ± 10 mm **MPB<'-*L1****

R = 1000 ± 10 mm **MPB<'-*L+*****

OI G4j]

Chain required 2-way (700, 1000): 1.6, 1.9 meter

Slide rail required 2-way (500, 700, 1000): 4.7, 5.6 meter

SV Horizontal Plain Bend 45°

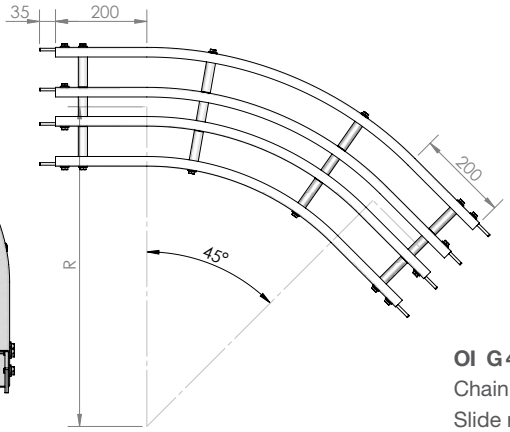

Bi ldi hr[fj f[dh \ _h^&./ª ∂ +ª

R = 700 ± 10 mm **MPB<'./L1****

R = 1000 ± 10 mm **MPB<'./L+*****

OI G4j]

Chain required 2-way (700, 1000): 2.0, 2.4 meter

Slide rail required 2-way (700, 1000): 5.8, 7.2 meter

SV Horizontal Plain Bend 90°

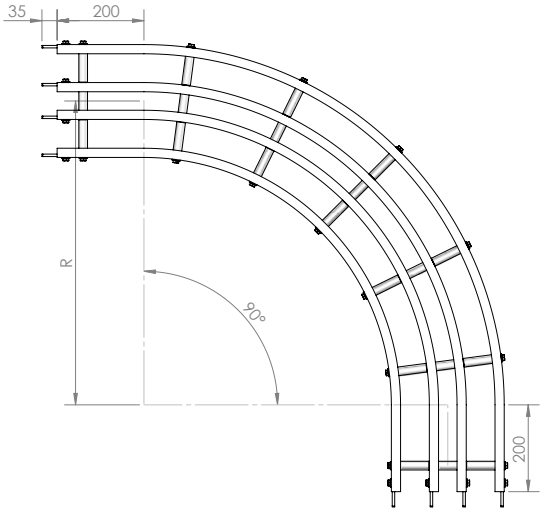

Bi ldi hr[fj f[dh \ _h^&3*ª ∂ +ª

R = 700 ± 10 mm **MPB<'3*L1****

R = 1000 ± 10 mm **MPB<'3*L+*****

OI G4j]

Chain required 2-way (700, 1000): 3.1, 4.0 meter

Slide rail required 2-way (700, 1000): 9.1, 12.0 meter

SV Horizontal Plain Bend 5-180°

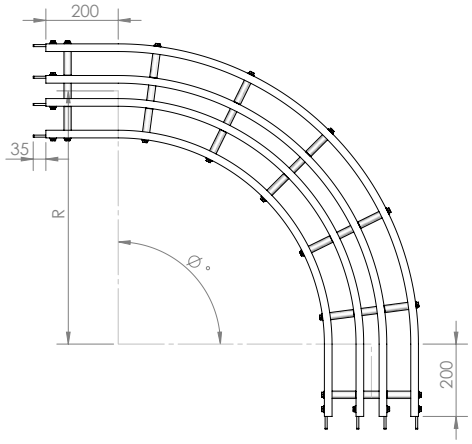

?r[g j f_ `i l MP Bi ld i hr[f Jf[dh <_h^ l l^_ldha

Bi ld i hr[f j f[dh \ _h^&ß ª ∂ +ª

R = 700 ± 10 mm **MPB<'ß L 1****

R = 1000 ± 10 mm **MPB<'ß L +*****

If an angle of 120° is needed for radius R700 horizontal plain bend, the ordering part number is

MPB<'+, * L / **

Ol G4j]

Chain required 2-way (700, 1000): meter (Variable to angle)
Slide rail required 2-way (700, 1000): meter (Variable to angle)

SV Vertical Bend 5°

SVVB-5R400

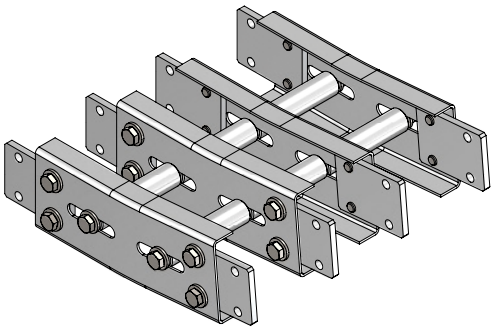

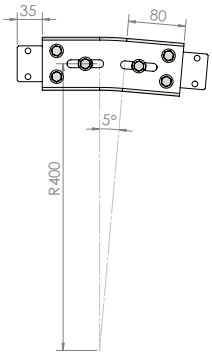

Ol G4j]

Chain required 2-way: 0.4 meter
Slide rail required 2-way: 1.6 meter

SV Vertical Bend 15°

SVVB-15R400

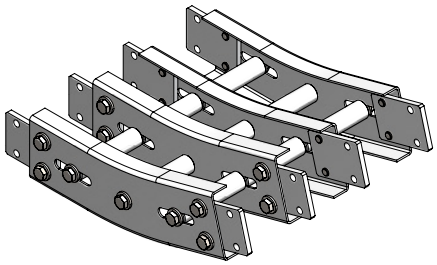

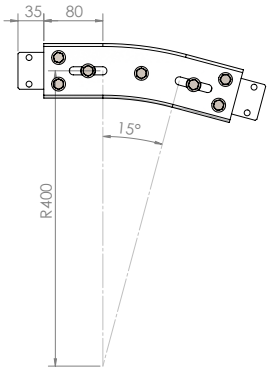

Ol G4j]

Chain required 2-way: 0.6 meter
Slide rail required 2-way: 2.2 meter

SV Vertical Bend 30°

SVVB-30R400

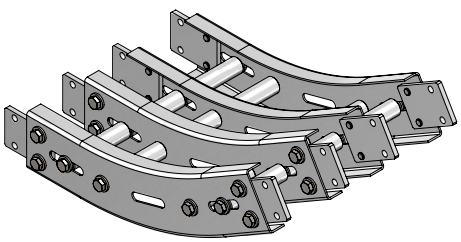

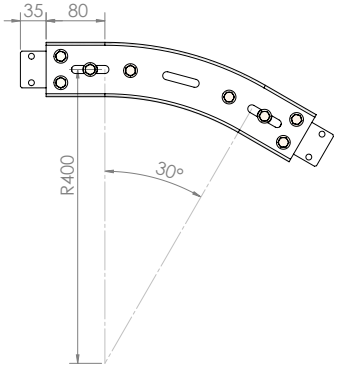

Ol G4j]

Chain required 2-way: 0.8 meter
Slide rail required 2-way: 3.0 meter

SU Vertical Bend 5° - 90°

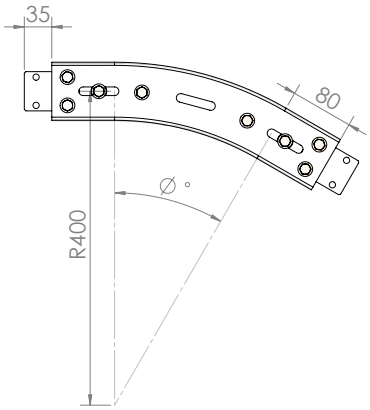

?r[g j f_ `i l MP P_lm] [f <_h^ l l^_lcha

- Vertical bend, Ø° ± 1°

If an angle of 25° is needed for vertical bend,
the ordering part number is

MPP<', / L. **

HüÉ%ÔÊÉ/%ÉÉ≤y%%W › É≠ e©Éy%Ô ¢≤ó%ò≤≤ÉoÊ≤ó%Ê¢≈
‹F #F°í ¸ ˜· í »%≤ó©%ê%A| %Ô Ê%É%y ¢WÊÉy
ˆ üÉ≤%y É/¢≤ó

SV Horizontal beam support bracket – Stainless Steel

SAHBS-90

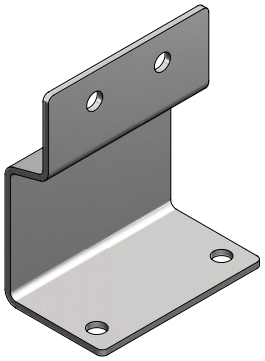

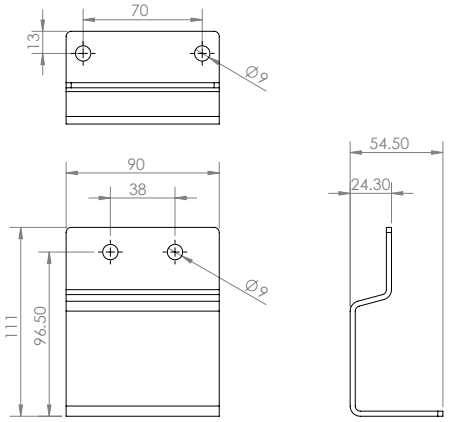

OI G4j]

SV Horizontal Tripod Support

SBSV-HXXXX, where XXXX = H Height (mm)

SV Adjustable Angle Tripod Support

SBSV-A-HXXXX, where XXXX = H Height (mm)

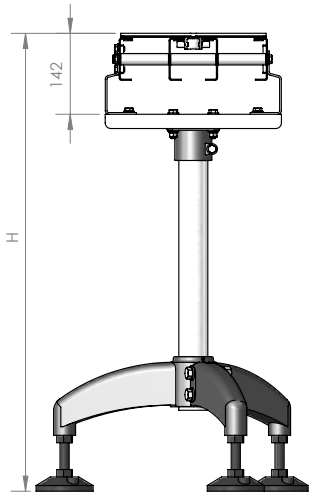

OI G4j]
Includes Beam Support Brackets

FASR-25	HDPE Slide Rail - White	‘9∂/≠ W%∞≈≈@WÊ∂≤’
FASR-25U	UHMW-PE Slide Rail - White	‘6∂ˆ ‰/¢Ê∂≤v‰ÔÊ¥e€%∂/‰bo Ô≠ Ô©Ê∂≤’
FASR-25X	Special PE Slide Rail - Blue	‘6∂ˆ É› Ê‰/¢Ê∂≤v‰ÔÊ¥e€%∂/‰bo Ô≠ Ô©Ê∂≤’
FASR-25T	PAPE Slide Rail - Grey	‘. ¢ü%¥e/W¢É%¥≤y‰¢ü%@Wy’‰
FASR-25CD	Conductive Slide Rail - Black	‘FÊ¥Ê¢%∂≤y Ô¢Ê¢É’
FASR-25P	PVDF Slide Rail - White	‘, ∂/‰e/W¢É%¥≈≈@WÊ∂≤’

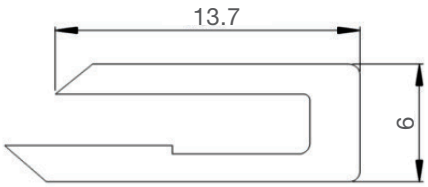

See page 70 for detail slide rail information

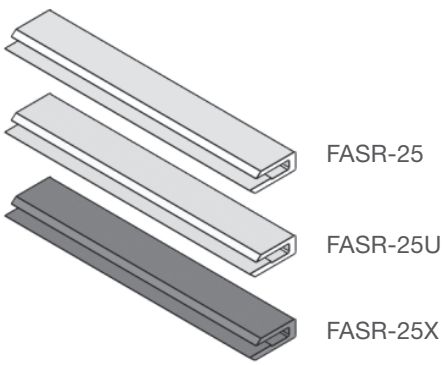

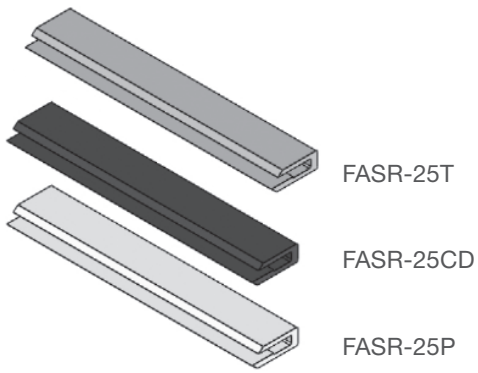

OI G4, / g _n_l) li ff

FASLR-4x6	Aluminum Rivet for Slide Rail

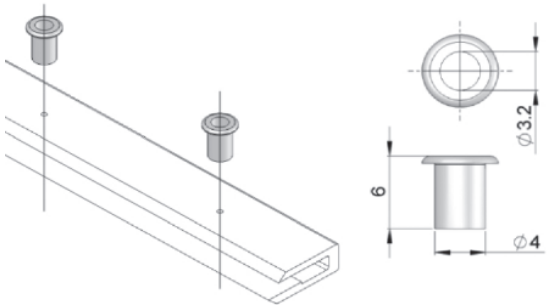

OI G4/* j] m) j e

FASLS-M5	Nylon Set Screw for Slide Rail

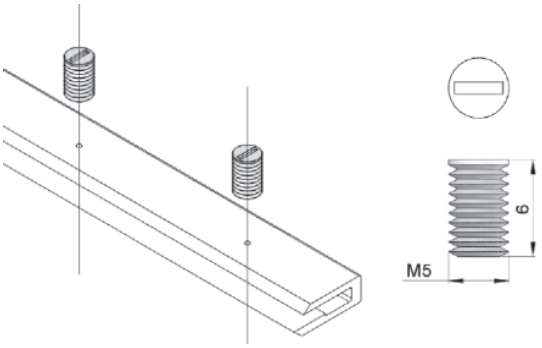

OI G4/* j] m) j e

SASHN-1M8 M8 Single Nut, Non-Rotating

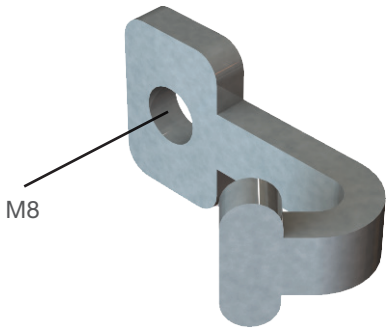

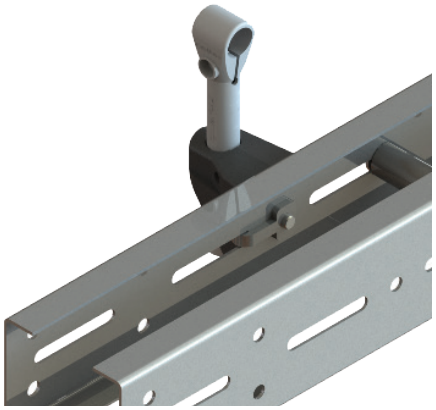

OI G4+* j]m) j e

SASHN-2M8 M8 Double Nut, Non-Rotating

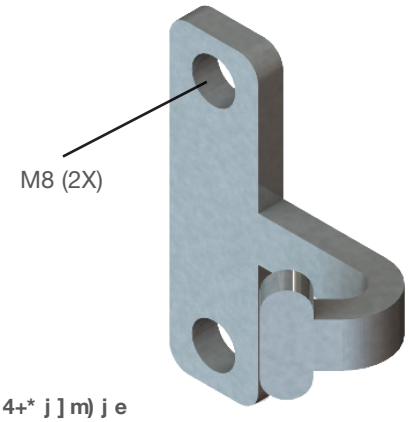

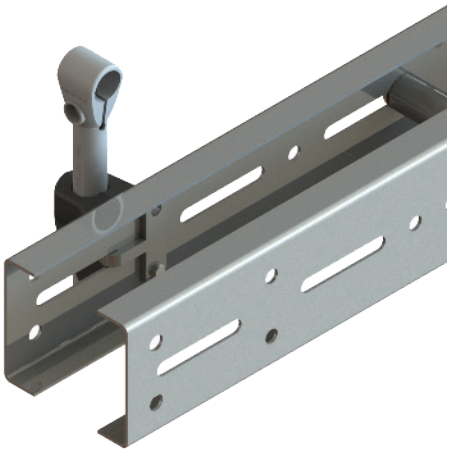

OI G4+* j]m) j e

SAFW-M8 M8 Flat Washer – Stainless Steel

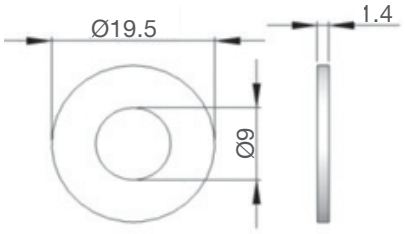

OI G4/* j]m) j e

SALN-M8 M8 Lock Nut – Stainless Steel

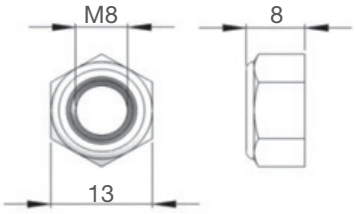

OI G4/* j]m) j e

SAHB- M8xXX Hex Bolt, M8 – Stainless Steel. Where XX = L = Length (= 12, 16, 25, 45, 100 mm)

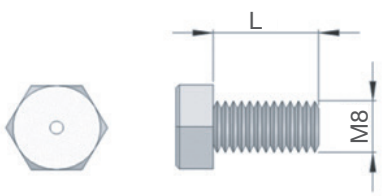

OI G4/* j]m) j e

SADBS-WW-HHHH Direct Drive Tripod Support

Where WW = Width (SS = 65; SM = 85; SC = 105; SU = 180; SV = 260)
HHHH = Height = Top of Chain Height

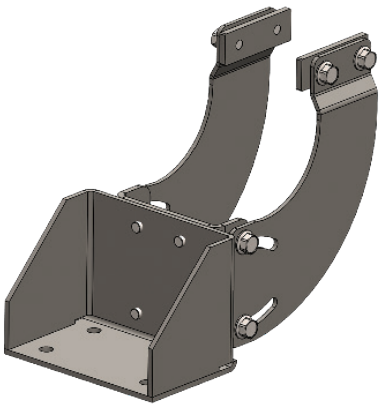

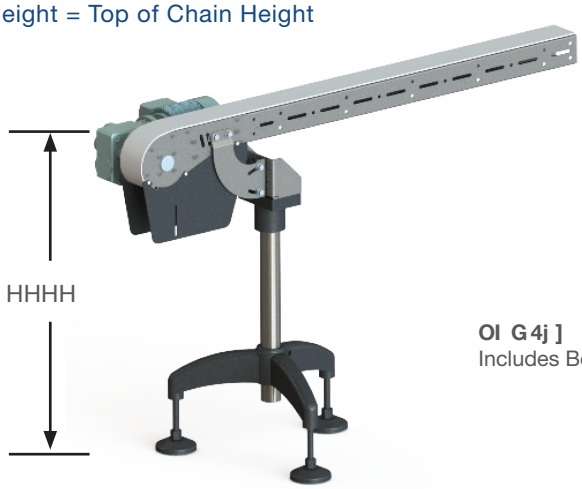

Ol G4j]
Includes Beam Support Bracket

SABS-38x4 Beam Spacer, Stainless Steel

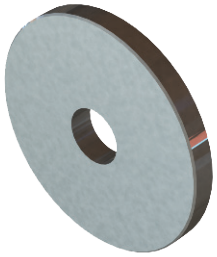

Ol G4+* j] m) j e

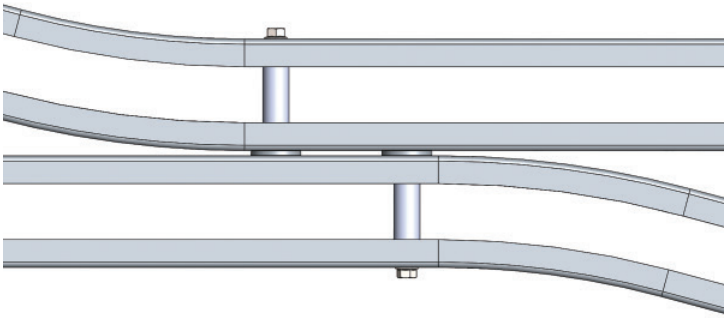

FAFR-35 Free Roller – POM

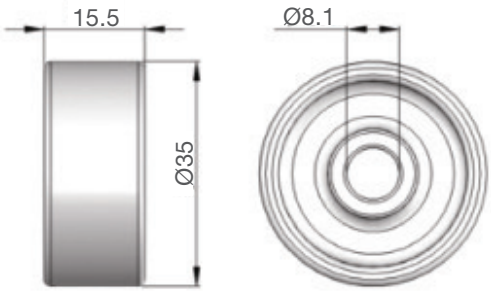

Ol G4+* j] m) j e

FAFR-18 Free Roller – POM

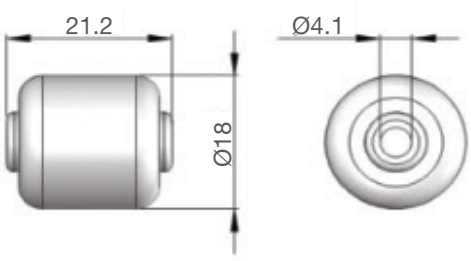

Ol G4+* j] m) j e

FAFR-11 Free Roller - POM

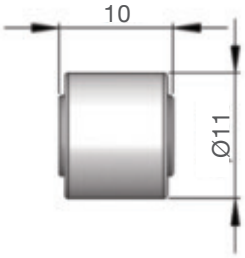

OI G4+* j]m) j e

FASR-75x15 Sponge Roller, Sponge Rubber

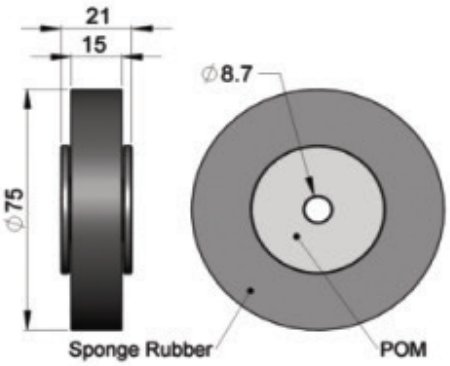

OI G4+* j]m) j e

FASR-75x19P PVC Roller c/w POM Core & Screw

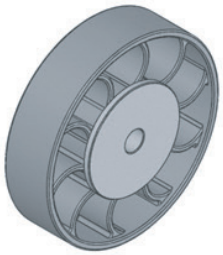

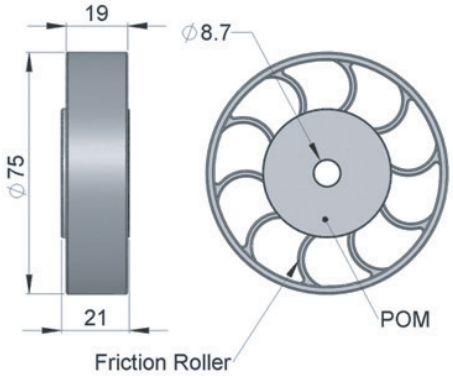

OI G4+* j]m) j e

SG Guide Assembly — 12/18 mm Rail, Fully Adjustable

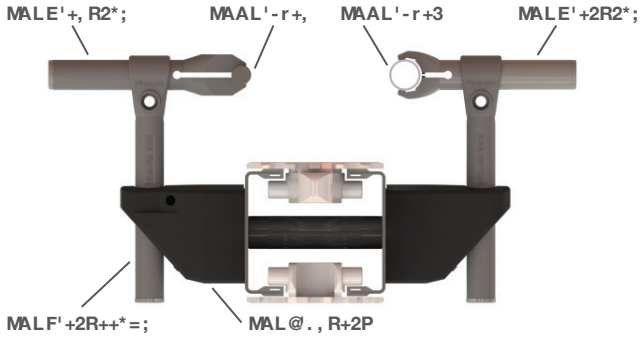

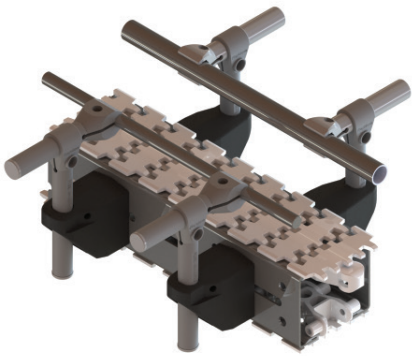

SG Guide Assembly — 12/18 mm Rail, Adjustable Width/Height

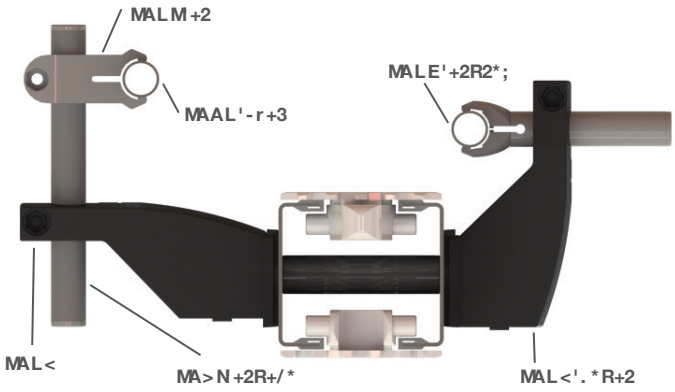

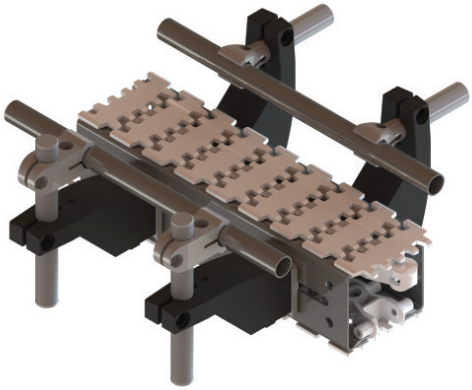

SG Guide Assembly — 12/18 mm Rail, Twin Rail

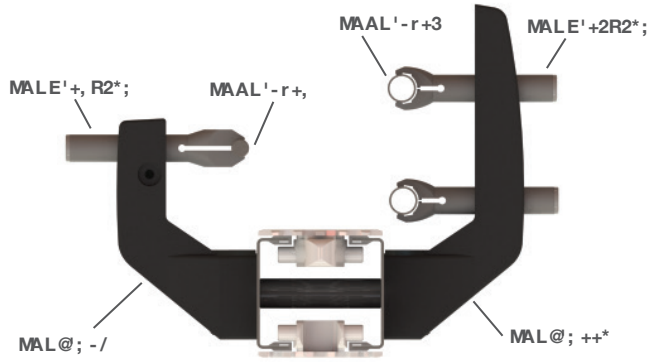

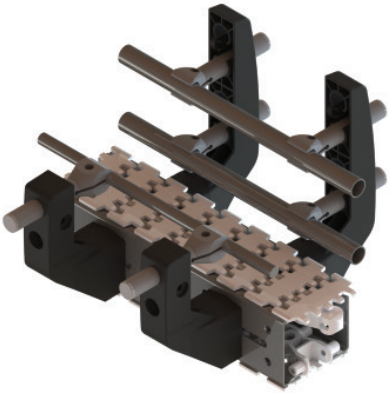

SG Guide Assembly — 18 mm Rail, Overhead Guide

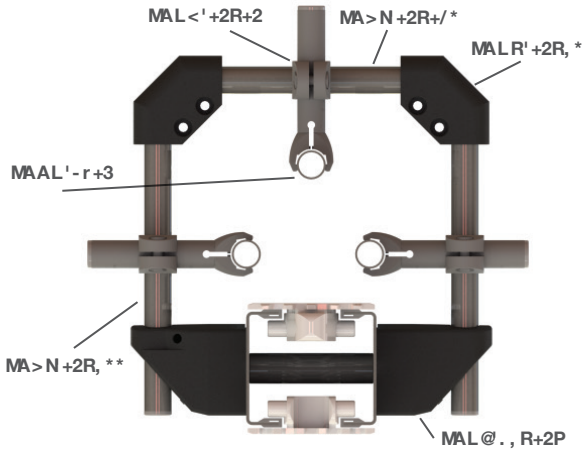

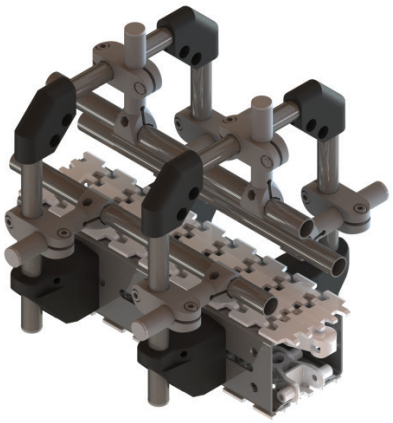

FGRR-15X20P	Guide Rail Rectangular, 15 mm x 20 mm – HDPE

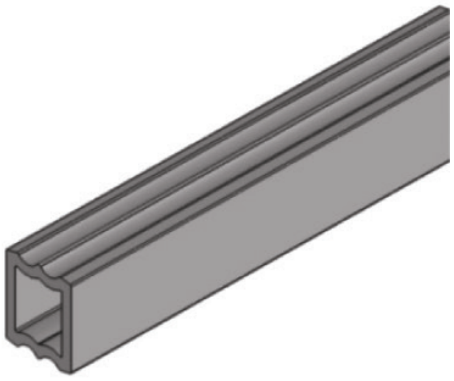

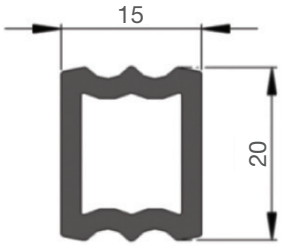

OI G4- g _n_l) f_harb

SGGR-3x19 D = 19 mm	Guide Rail Tube – Stainless Steel
SGGR-3x12 D = 12 mm	Guide Rail Solid Round – Stainless Steel

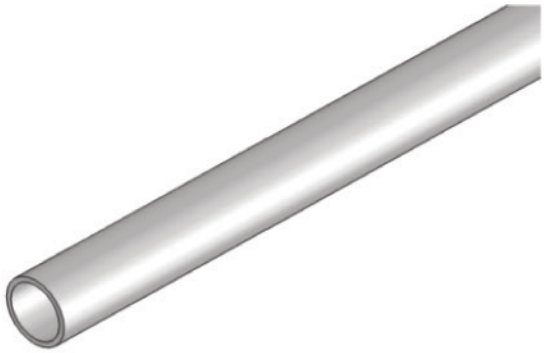

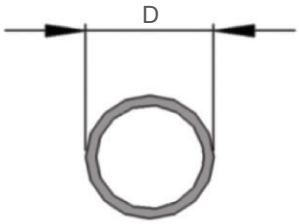

OI G4- g _n_l) f_harb

SGDT-18x150 D = 19mm L = 150	Distance Tube – Stainless Steel
SGDT-18x200 D = 19mm L= 200	Distance Tube – Stainless Steel

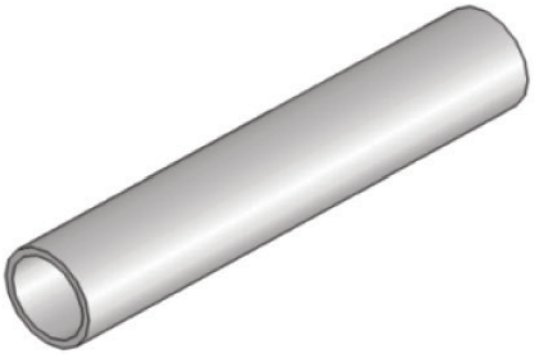

OI G4+* j] m) j e

SGRS-18 Guide Rail Support - Polyamide

J ď ÏÓĽĂääĉJ ȯĂĂĽĉJ sáĂġ ď Ó} ĉ= ëċä

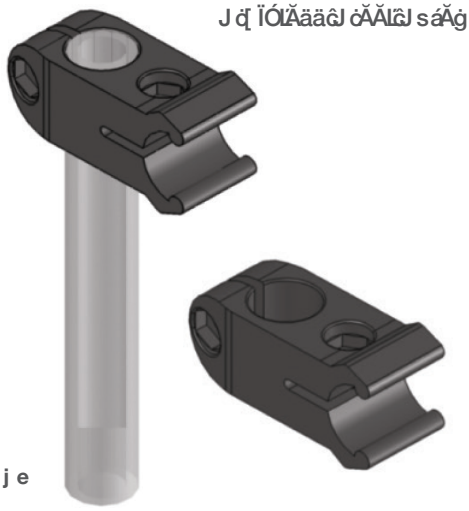

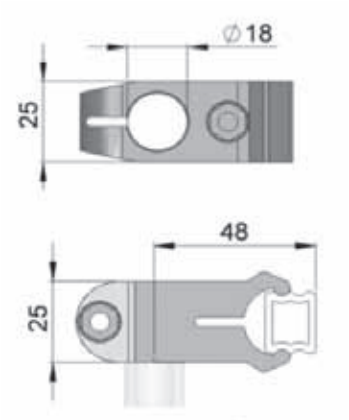

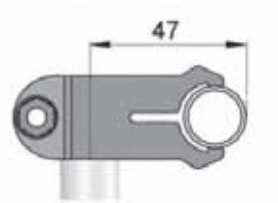

OI G4+* j] m) j e

SGRL-18x110C Guide Rail Support, L = 110mm - Polyamide

SGRL-18x160C Guide Rail Support, L = 160mm - Polyamide

J ď ÏÓĽĂääĉJ ȯĂĂĽĉJ sáĂġ ď Ó} ĉ= ëċä

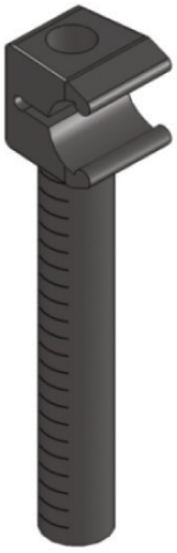

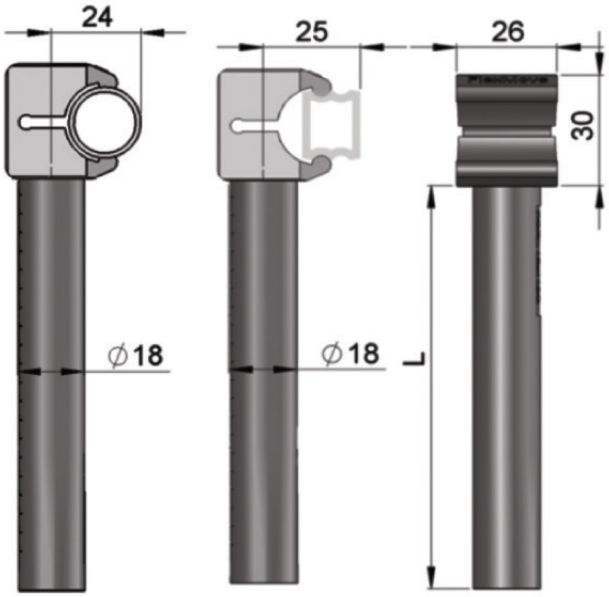

OI G4+* j] m) j e

SGRD-12x80 Guide Rail Clamp Rod, L = 80mm – S/Steel

SGRD-12x130 Guide Rail Clamp Rod, L = 130mm – S/Steel

J ď ÏÓĽĂääĉJ ȯĂĂĽĉJ sáĂġ ď Ó} ĉ= ëċä

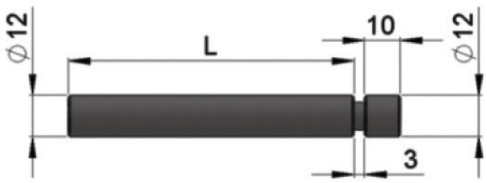

OI G4+* j] m) j e

SGRK-12 Guide Rail Clamp - Polyamide

J ď[ÏÓĹĂääĉJ ȯĂĂĹĉJ sáĂġ ď[Ó} ĉ= ëȯä

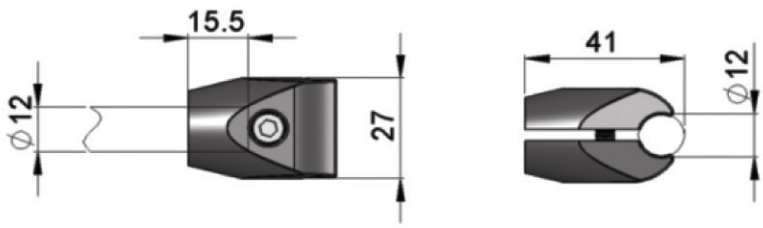

OI G4+* j] m) j e

SGRK-12x80A Guide Rail Support, L = 80mm - Polyamide

SGRK-12x130A Guide Rail Support, L = 130mm - Polyamide

J ď[ÏÓĹĂääĉJ ȯĂĂĹĉJ sáĂġ ď[Ó} ĉ= ëȯä

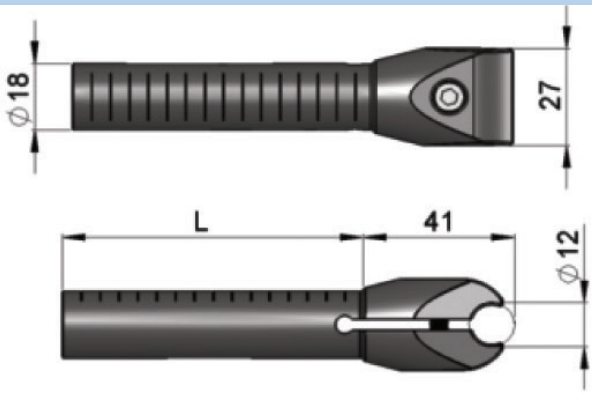

OI G4+* j] m) j e

SGRK-18x40A Guide Rail Support, L = 40mm - Polyamide

SGRK-18x60A Guide Rail Support, L = 60mm - Polyamide

SGRK-18x80A Guide Rail Support, L = 80mm - Polyamide

SGRK-18x130A Guide Rail Support, L = 130mm - Polyamide

J ď[ÏÓĹĂääĉJ ȯĂĂĹĉJ sáĂġ ď[Ó} ĉ= ëȯä

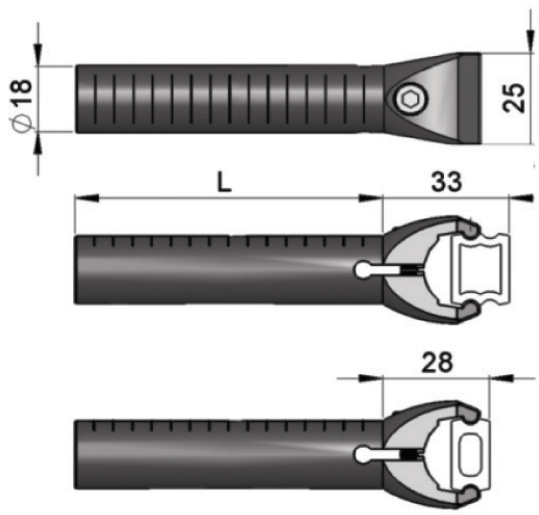

OI G4+* j] m) j e

SGRC-18x110C — Double Guide Rail Support, L = 110mm - Polyamide

SGRC-18x160C — Double Guide Rail Support, L = 160mm - Polyamide

J ď[ÏÓĹĂääĉJ ȯĂĂĹĉJ sáĂġ ď[Ó} ĉ= ëȯä

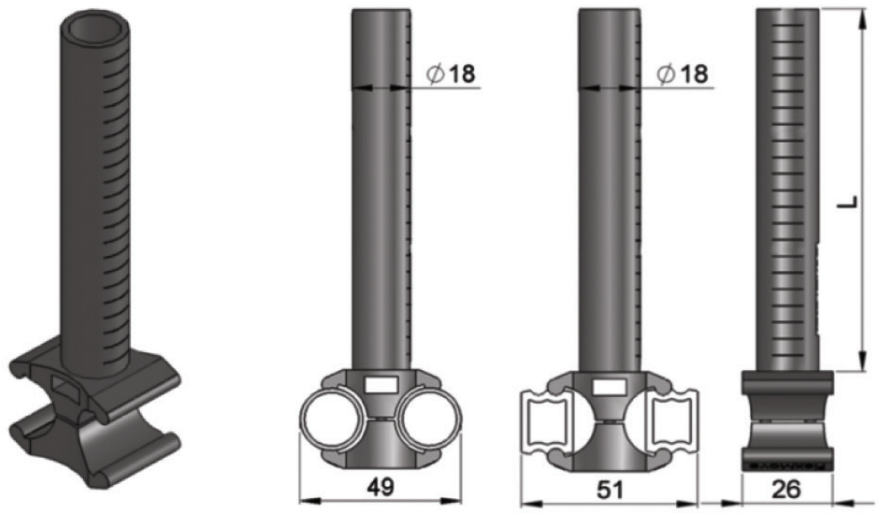

OI G4+* j] m) j e

FGEC-18 — End cap. 18 mm Tube - Polyamide

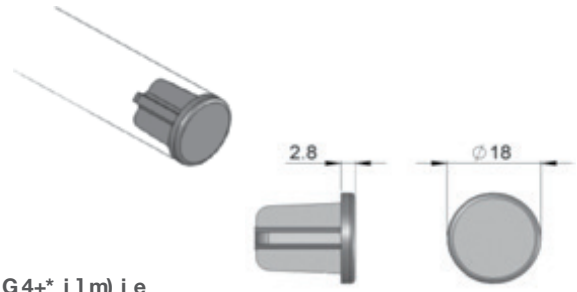

OI G4+* j] m) j e

OI G4+* j] m) j e

SGRF-A35 — Guide Rail Bracket Support A35 – Polyamide

J ď[ÏÓĹĂääĉJ ȯĂĂĹĉJ sáĂġ ď[Ó} ĉ= ëȯä

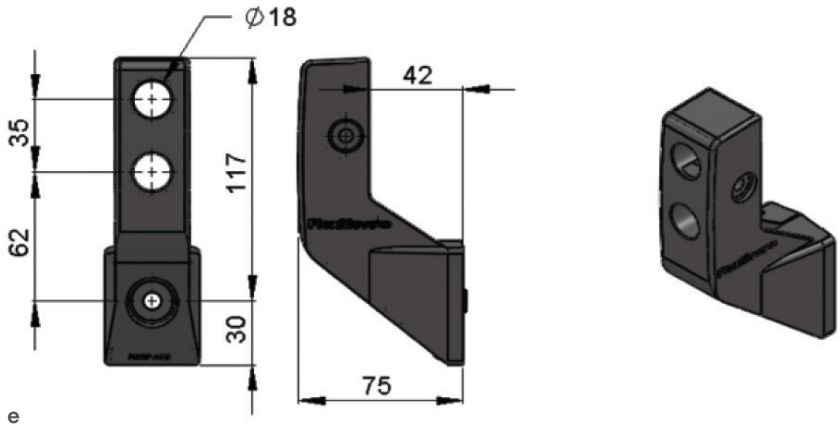

OI G4+* j] m) j e

SGRF-A110 Guide Rail Bracket Support A110 – Polyamide

J ď ÏÓĽĂääĉJ ċĂĂĽĉJ sáĂġ ď Ó} ĉ= ëċä

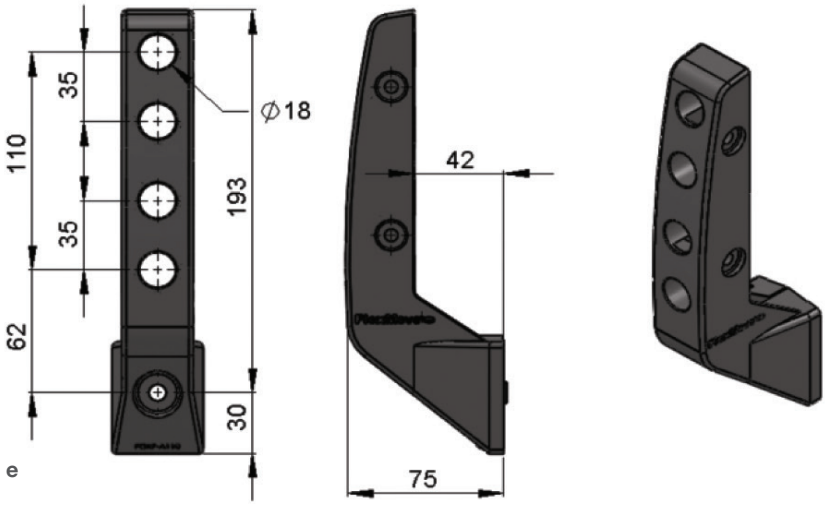

Ol G4+* j] m) j e

FGRF-DP FGRF Dummy Plug

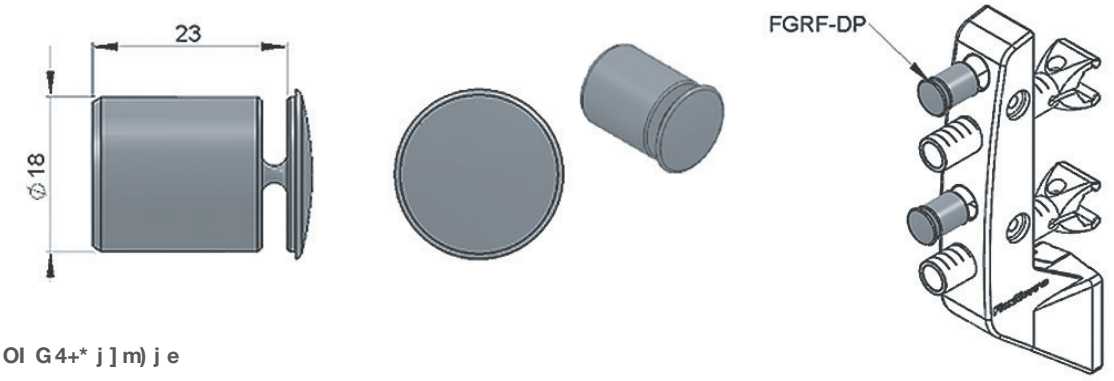

Ol G4+* j] m) j e

SGRL-18x110CA Guide Rail Support, L = 110mm - Polyamide

SGRL-18x160CA Guide Rail Support, L = 160mm - Polyamide

J ď ÏÓĽĂääĉJ ċĂĂĽĉJ sáĂġ ď Ó} ĉ= ëċä

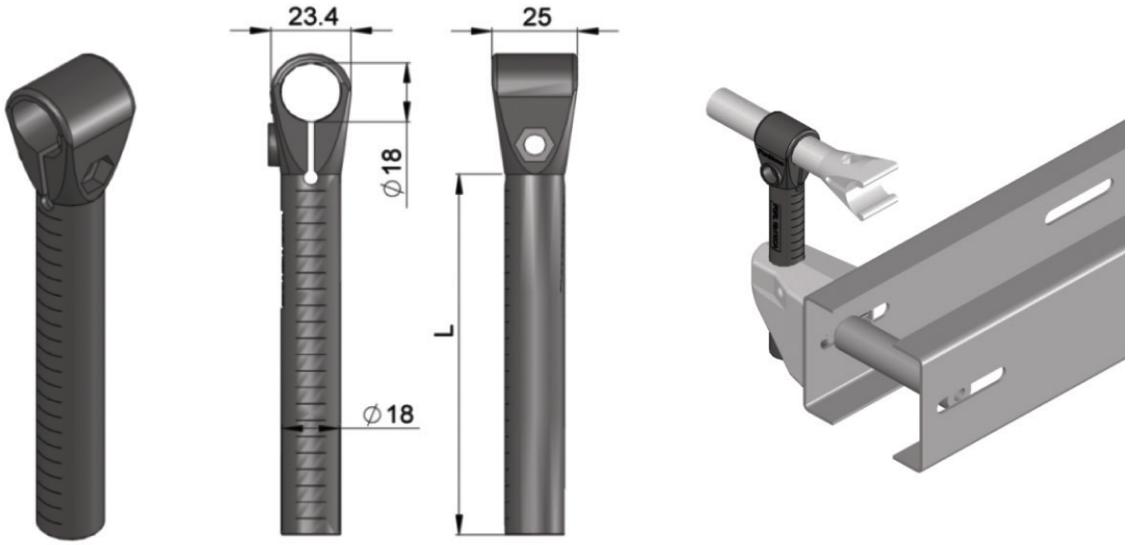

Ol G4+* j] m) j e

SGRF-42x18V

Guide Rail Bracket – Polyamide

J ď[ÏÓĹĂääĉJ ȯĂĂĹĉJ sáĂġ ď[Ó} ĉ= ëċä

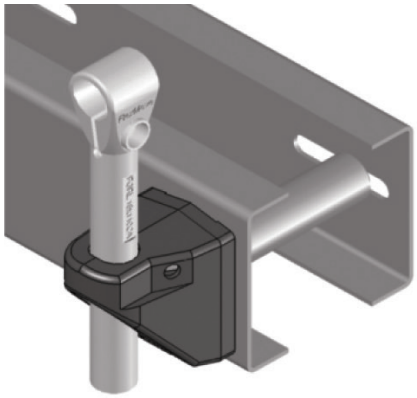

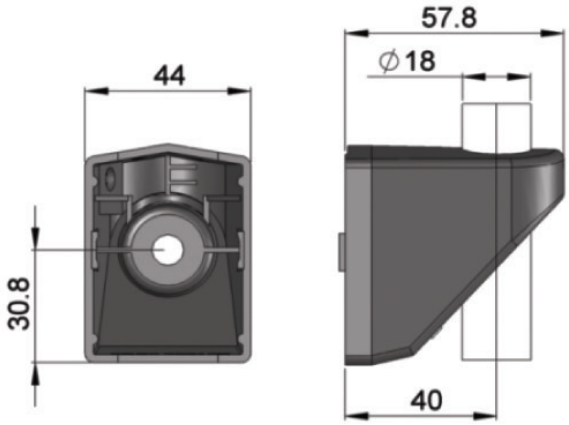

Ol G4+* j] m) j e

FGRD-18A

Spacer for SGRF-42x18V - Polyamide

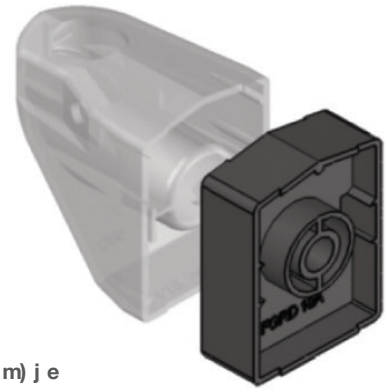

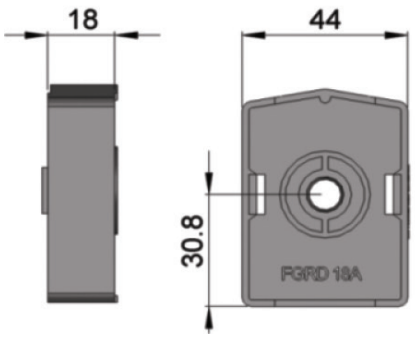

Ol G4+* j] m) j e

SGRB-40x18

Guide Rail Bracket, D = 18mm - Polyamide

J ď[ÏÓĹĂääĉJ ȯĂĂĹĉJ sáĂġ ď[Ó} ĉ= ëċä

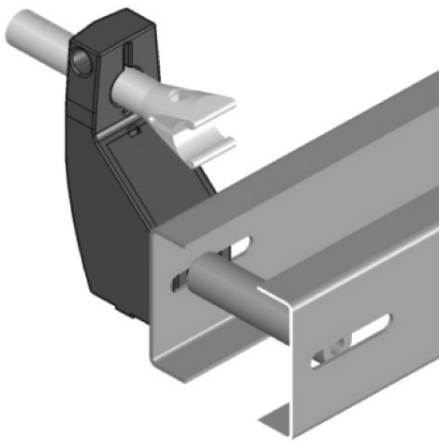

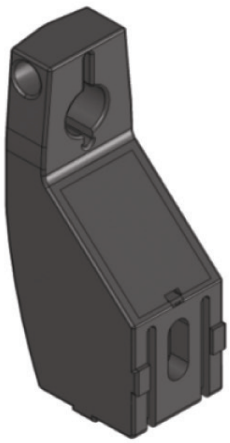

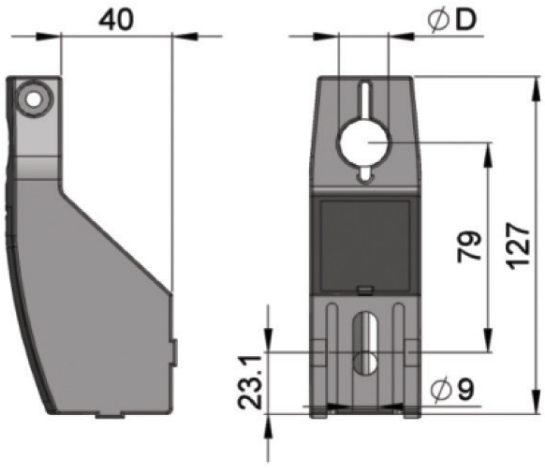

Ol G4+* j] m) j e

FGRD-6B

Spacer for SGRB-40x18, SGRB-40x20 - Polyamide

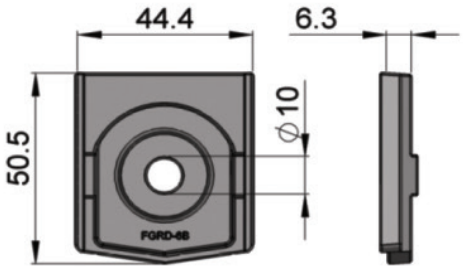

Ol G4+* j] m) j e

SGRB-18x18

Guide Rail Bracket, ØA = 18mm, ØB = 18mm - Polyamide

J ¢[ÏÓĹĂääĉJ ¢ĂĂĹĉJ sáĂġ ¢[Ó} ĉ= ëċä

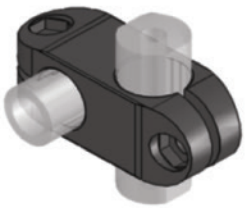

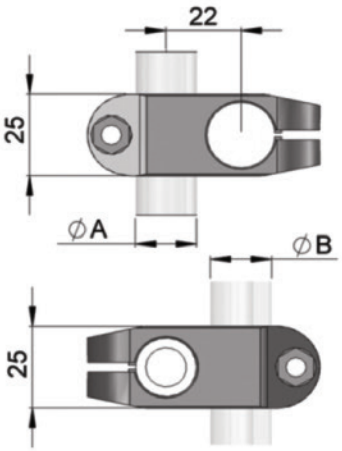

Ol G4+* j] m) j e

SGRX-18X20

90° Corner Connector - Polyamide

J ¢[ÏÓĹĂääĉJ ¢ĂĂĹĉJ sáĂġ ¢[Ó} ĉ= ëċä

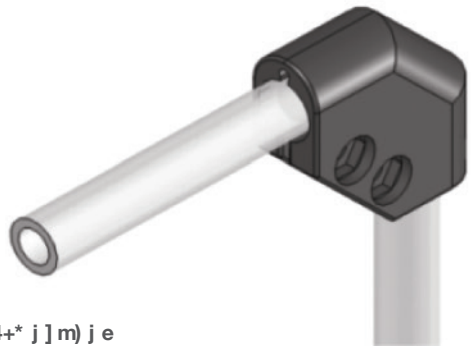

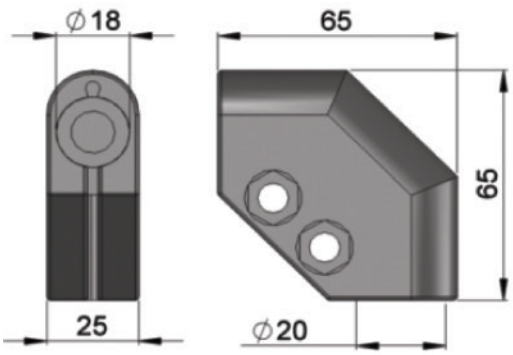

Ol G4+* j] m) j e

Direct Mount, SEW Equivalent, Fixed Speed - 20 mm Shaft

230/460V 60 Hz

- Sealed Gearmotor
- SEW SA37 Size gearmotor
- Totally enclosed fan cooled
- 230/460V 3 Phase
- 60 Hz
- Wiring by others

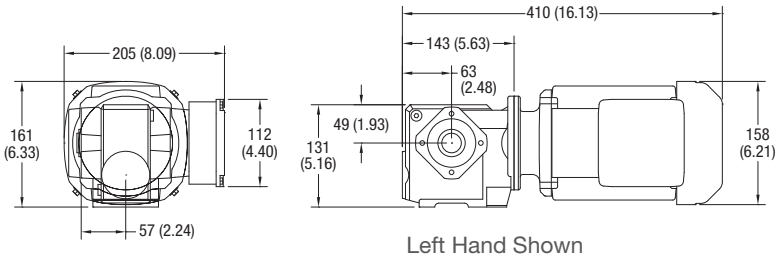

Left Hand Shown

Regulatory Approvals

Part Number	Chain Speed SS, SM, SU, SV Ft/min	Chain Speed SS, SM, SU, SV M/min	Chain Speed SC Ft/min	Chain Speed SC M/min	RPM	Hp	kW	Amps	in.-lbs.	Nm	Starter Chart Page 69
FMM129(X)DS423EN	17.1	5.2	18	5.5	13	0.25	0.18	1.1/0.56	837	95	L
FMM067(X)DS423EN	32.8	10	34.8	10.6	25	0.5	0.37	1.9/0.95	699	79	M
FMM032(X)DS423EN	69.9	21.3	73.8	22.5	53	0.75	0.55	2.7/1.35	653	74	M
FMM015(X)DS423EN	150.3	45.8	158.5	48.3	114	0.75	0.55	2.7/1.35	341	39	M
FMM013(X)DS423EN	171.3	52.2	180.8	55.1	130	1	0.75	3.1/1.57	425	48	P
FMM010(X)DS423EN	225.4	68.7	237.9	72.5	171	1.5	1.1	4.2/2.1	490	56	P

Where (X) is L or R for Right Hand or Left Hand Gearmotor matching RH or LH Drive

230/400V 50 Hz

- Sealed Gearmotor
- SEW SA37 Size gearmotor
- Totally enclosed fan cooled
- 230/400V 3 Phase
- 50 Hz
- Wiring by others

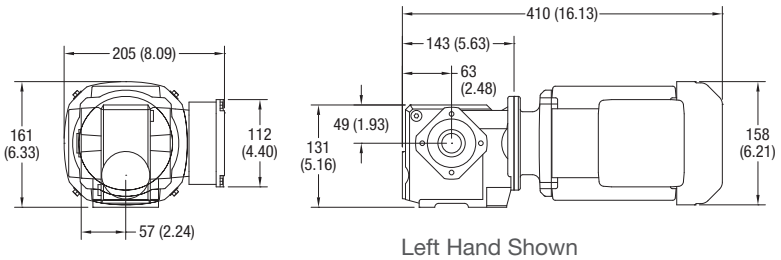

Left Hand Shown

Regulatory Approvals

Part Number	Chain Speed SS, SM, SU, SV Ft/min	Chain Speed SS, SM, SU, SV M/min	Chain Speed SC Ft/min	Chain Speed SC M/min	RPM	Hp	kW	Amps	in.-lbs.	Nm	Starter Chart Page 69
FMZ099(X)DS423EN	17.1	5.2	18	5.5	13	0.33	0.25	1.3/0.76	628	71	I
FMZ060(X)DS423EN	30.2	9.2	31.8	9.7	23	0.5	0.37	1.9/1.09	717	81	I
FMZ029(X)DS423EN	63.3	19.3	66.6	20.3	48	0.75	0.55	2.6/1.52	478	54	I
FMZ013(X)DS423EN	137.1	41.8	144.7	44.1	104	1	0.75	3.1/1.79	363	41	J
FMZ009(X)DS423EN	205.7	62.7	213.9	66.1	156	1.5	1.1	4.1/2.38	336	38	J
FMZ007(X)DS423EN	284.8	86.8	300.5	91.60	216	2	1.5	5.6/3.23	372	42	N/A

Where (X) is L or R for Right Hand or Left Hand Gearmotor matching RH or LH Drive

F&P %ÉW/≠ ∂Ê/› %WÉ%/∂y ÔoÊ %ê%F&P %Ô/∂y/¢É

CE **Note:** When buying a gearmotor only without the starter, the customer must supply their own on/off switch and motor overload protection to comply with the CE Safety Directive.

FLA = Full Load Amperes Some motors and gear reducers may normally operate hot to the touch. Consult factory for specific operating temperatures. **Note:** Dimensions = mm (in)

Direct Mount, SEW Equivalent, Variable Speed - 20 mm Shaft

230/460V 60 Hz

- Sealed Gearmotor
- SEW SA37 Size gearmotor
- Totally enclosed fan cooled
- 230/460V 3 Phase
- 60 Hz
- Wiring by others

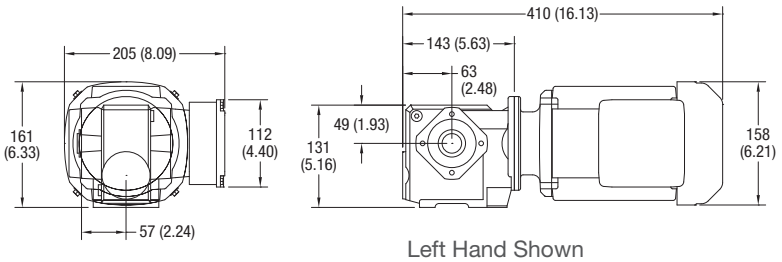

Left Hand Shown

Regulatory Approvals

Part Number	Chain Speed SS, SM, SU, SV Ft/min	Chain Speed SS, SM, SU, SV M/min	Chain Speed SC Ft/min	Chain Speed SC M/min	RPM	Hp	kW	Amps	in.-lbs.	Nm	VFD Chart Page 68
FMM129(X)DS423EN	2.9 - 17.1	0.9 - 5.2	3 - 18	0.9 - 5.5	13	0.25	0.18	1.1/0.56	837	95	D
FMM067(X)DS423EN	5.5 - 32.8	1.7 - 10	5.8 - 34.8	1.8 - 10.6	25	0.5	0.37	1.9/0.95	699	79	D
FMM032(X)DS423EN	11.7 - 69.9	3.6 - 21.3	12.3 - 73.8	3.8 - 22.5	53	0.75	0.55	2.7/1.35	653	74	D
FMM015(X)DS423EN	25.1 - 150.3	7.6 - 45.8	26.4 - 158.5	8.1 - 48.3	114	0.75	0.55	2.7/1.35	341	39	D
FMM013(X)DS423EN	28.6 - 171.3	8.7 - 52.2	30.1 - 180.8	9.2 - 55.1	130	1	0.75	3.1/1.57	425	48	D
FMM010(X)DS423EN	37.6 - 225.4	11.5 - 68.7	39.7 - 237.9	12.1 - 72.5	171	1.5	1.1	4.2/2.1	490	56	D

Where (X) is L or R for Right Hand or Left Hand Gearmotor matching RH or LH Drive

230/400V 50 Hz

- Sealed Gearmotor
- SEW SA37 Size gearmotor
- Totally enclosed fan cooled
- 230/400V 3 Phase
- 50 Hz
- Wiring by others

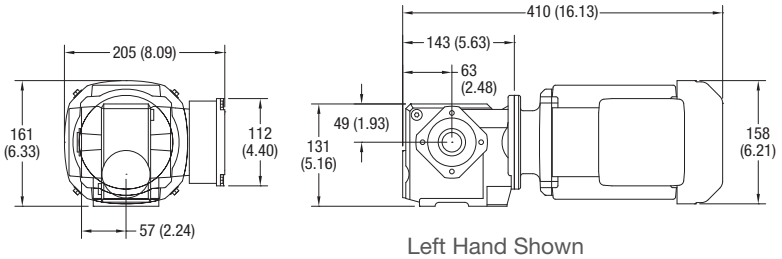

Left Hand Shown

Regulatory Approvals

Part Number	Chain Speed SS, SM, SU, SV Ft/min	Chain Speed SS, SM, SU, SV M/min	Chain Speed SC Ft/min	Chain Speed SC M/min	RPM	Hp	kW	Amps	in.-lbs.	Nm	VFD Chart Page 68
FMZ099(X)DS423EN	3.4 - 17.1	1 - 5.2	3.6 - 18	1.1 - 5.5	13	0.33	0.25	1.3/0.76	628	71	B
FMZ060(X)DS423EN	6 - 30.2	1.8 - 9.2	6.4 - 31.8	1.9 - 9.7	23	0.5	0.37	1.9/1.09	717	81	B
FMZ029(X)DS423EN	12.7 - 63.3	3.9 - 19.3	13.3 - 66.6	4.1 - 20.3	48	0.75	0.55	2.6/1.52	478	54	B
FMZ013(X)DS423EN	27.4 - 137.1	8.4 - 41.8	28.9 - 144.7	8.8 - 44.1	104	1	0.75	3.1/1.79	363	41	B
FMZ009(X)DS423EN	41.1 - 205.7	12.5 - 62.7	43.4 - 213.9	13.2 - 66.1	156	1.5	1.1	4.1/2.38	336	38	B
FMZ007(X)DS423EN	57 - 284.8	17.4 - 86.8	60.1 - 300.5	18.3 - 91.60	216	2	1.5	5.6/3.23	372	42	B

Where (X) is L or R for Right Hand or Left Hand Gearmotor matching RH or LH Drive

F&P %ÉW≠ ∂Ê∂/› %WÉ‰∂y ÔoÉ ‰Ê&P %ÔÒ∂y/¢ É

Note: When buying a gearmotor only without the starter, the customer must supply their own on/off switch and motor overload protection to comply with the CE Safety Directive.

FLA = Full Load Amperes Some motors and gear reducers may normally operate hot to the touch. Consult factory for specific operating temperatures. **Note:** Dimensions = mm (in)

Variable Speed Controllers

Chart B — VFD Controller, Full CE Compliance, 50 Hz

- VFD control
- IP 65 enclosure
- EMC filter
- Variable speed
- Mounting hardware
- Line cord and motor cord
- Motor cord only on 460V

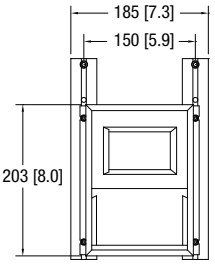

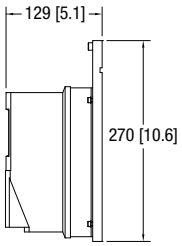

Regulatory Approvals

CE

c UL us

Part Number	Input Volts	Input Phase	Input Hz	Output Volts	Output Phase	Max Kw*	Max Amps	Reversing
62UV2121	230	1	50	230	3	0.75	4.2	Yes
62UV4341	400	3	50	400	3	0.75	2.1	Yes
62UV2127	230	1	50	230	3	1.50	6.8	Yes
62UV4347	400	3	50	400	3	1.50	3.4	Yes

Chart D — VFD Controller, 60 Hz

- Full feature VFD control
- NEMA 4 enclosure
- Digital display
- Keypad with Start/Stop, Forward/Reverse and speed variations
- Includes cord to motor
- Power to controller by others
- 62MV1122 includes line cord to controller
- Mounting hardware

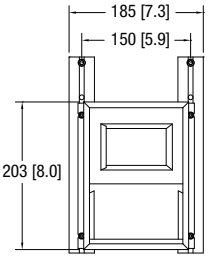

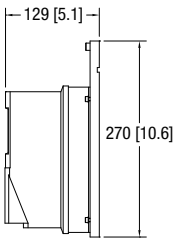

Regulatory Approvals

CE

c UL us

Part Number	Input Volts	Input Phase	Input Hz	Output Volts	Output Phase	Max Hp	Output Amps*	Reversing
32MV1122	115	1	60	230	3	0.5	2.2	Yes
32MV2122	230	1	60	230	3	0.5	2.2	Yes
32MV1121	115	1	60	230	3	1.0	4.0	Yes
32MV2121	230	1	60	230	3	1.0	4.0	Yes
32MV2127	230	1	60	230	3	2.0	6.8	Yes
32MV2322	230	3	60	230	3	0.5	2.2	Yes
32MV2327	230	3	60	230	3	2.0	6.8	Yes
32MV4341	460	3	60	460	3	1.0	2.0	Yes
32MV4347	460	3	60	460	3	2.0	3.4	Yes

In order for this drive to meet full CE requirements for European application a separate CE approve RFI filter must be installed. Product shown in chart B above have this filter pre-installed and are recommended for use in the European Union.

F&P %éÉW≠ ∂Ê∂/› %WÉ%/∂yÔoÊ %æÊ%F&P %&Ô∂y/¢É

CE **Note:** When buying a gearmotor only without the starter, the customer must supply their own on/off switch and motor overload protection to comply with the CE Safety Directive.

FLA = Full Load Amperes Some motors and gear reducers may normally operate hot to the touch. Consult factory for specific operating temperatures. **Note:** Dimensions = mm (in)

Manual Motor Starters

Manual motor starts are manual electronic disconnects that provide motor overload protection and are required by the National Electric Code (NEC) for safe motor operation.

- IP 55 Enclosure
- Push button Start / Stop
- Includes mounting hardware

Regulatory Approvals

Illustration **A**

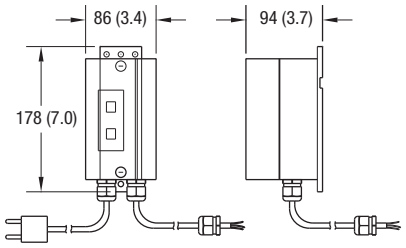

Illustration **B**

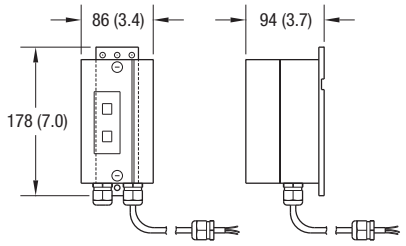

Chart I — 230/400V 50Hz to 2.5 amp

- 230 Volts, 1 phase includes cord, plug and starter
- 230/400 Volts, 3 phase wiring to starter by others
- Wiring between motor and starter provided when ordered together
- 50 Hz

Part Number	In Volts	In Phase	Amp Range	Illustration
62(c)M21T	230	1	1.6 - 2.5	A
62(c)M23T	230	3	1.0 - 1.6	B
62(c)M43T	400	3	0.63 - 1.0	B

Chart J — 230/400V 50 Hz to 4 amp

- 230 Volts, 1 phase includes cord, plug and starter
- 230/400V, 3 phase wiring to starter by others
- Wiring between motor and starter provided when ordered together
- 50 Hz

Part Number	In Volts	In Phase	Amp Range	Illustration
62(c)M21J	230	1	2.5 - 4.0	A
62(c)M23J	230	3	1.6 - 2.5	B
62(c)M43J	400	3	1.0 - 1.6	B

Chart L — 230/460V 60 Hz to 1.6 amp

- 230/460 Volts, 3 phase wiring to starter by others
- Wiring between motor and starter provided when ordered together
- 60 Hz

Part Number	In Volts	In Phase	Amp Range	Illustration
62MM23L	230	3	1.0 - 1.6	B
62MM43L	460	3	0.4 - .63	B

Chart M — 230/460V 60Hz to 2.5 amp

- 230/460 Volts, 3 phase wiring to starter by others
- Wiring between motor and starter provided when ordered together
- 60 Hz

Part Number	In Volts	In Phase	Amp Range	Illustration
62MM23M	208-230	3	1.6 - 2.5	B
62MM43M	460	3	1.0 - 1.6	B

Chart P — 230/460V 60Hz to 4 amp

- 230/460 Volts, 3 phase wiring to starter by others
- Wiring between motor and starter provided when ordered together
- 60 Hz

Part Number	In Volts	In Phase	Amp Range	Illustration
62MM23U	208-230	3	2.5 - 4.0	B
62MM43P	460	3	1.6 - 2.5	B

Chart Q — 230/460V 60Hz to 6.3 amp

- 230/460 Volts, 3 phase wiring to starter by others
- Wiring between motor and starter provided when ordered together
- 60 Hz

Part Number	In Volts	In Phase	Amp Range	Illustration
62MM23Q	208-230	3	4.0 - 6.3	B
62MM43Q	460	3	2.5 - 4.0	B

CE **Note:** When buying a gearmotor only without the starter, the customer must supply their own on/off switch and motor overload protection to comply with NEC and CE safety directive.

(c) = Electrical Configuration **G** = CE German
F = CE French **U** = CE Great Britain **Note:** Dimensions = mm (in)

Regulatory Approvals:

Conveyors:

All Dorner FlexMove Series standard conveyors (not including gearmotors and controllers) are CE approved. CE approval follows the provisions of the following directives; Machine Directive 2006/42/EC, EU Low Voltage Directive 2006/95/EC, and EMC Directive 2004/108/EC. All conveyors are marked with the CE symbol on the Dorner serial number tag located on the conveyor frame. Contact the factory for the CE Declaration of Conformity.

All Dorner FlexMove Series standard conveyors (not including gearmotors and controllers) are designed and manufactured in accordance with the restrictions defined in the "Restriction of Hazardous Substances" directive, citation 2011/65/EU, commonly known as RoHS. All conveyors are marked with the RoHS symbols on the Dorner serial number tag located on the conveyor frame.

Gearmotors and Controllers:

All Dorner FlexMove Series gearmotors and controllers carry one or more of the following approvals. Products are not covered by each approval. Please see the appropriate part number on the Gearmotor and controller charts located in this manual. In addition, regulatory symbols are located on the product information tags located on the product.

CE	CE Marking on a product is a manufacturer's declaration that the product complies with the essential requirements of the relevant European health, safety and environmental protection legislation, in practice by the Product Directives. CE Marking on a product ensures the free movement of the product within the European Union (EU).
RoHS	This directive restricts (with exceptions) the use of six hazardous materials in the manufacture of various types of electronic and electrical equipment. It is closely linked with the Waste Electrical and Electronic Equipment Directive (WEEE) 2002/96/EC which sets collection, recycling and recovery targets for electrical goods and is part of a legislative initiative to solve the problem of huge amounts of toxic e-waste.
	The UL Recognized Component mark is for products intended to be installed in another device, system or end product. This Recognized Component Mark is for the United States only. When a complete product or system containing UL Recognized Components is evaluated, the end-product evaluation process can be streamlined.
c US	The UL Recognized Component mark is for products intended to be installed in another device, system or end product. This Recognized Component Mark is for the United States and Canada. When a complete product or system containing UL Recognized Components is evaluated, the end-product evaluation process can be streamlined.
	CSA International (Canadian Standards Association), is a provider of product testing and certification services for electrical, mechanical, plumbing, gas and a variety of other products. Recognized in the U.S., Canada and around the world, CSA certification marks indicate that a product, process or service has been tested to a Canadian or U.S. standard and it meets the requirements of an applicable CSA standard or another recognized document used as a basis for certification.
c UL US	The UL Listing Mark means UL found that representative product samples met UL's safety requirements. These requirements are primarily based on UL's own published standards for safety. The C-UL-US Mark indicates compliance with both Canadian and U.S. requirements. The products with this type of Mark have been evaluated to Canadian safety requirements and U.S. safety requirements.

Clean Room Certifications:

FlexMove Conveyors are often used in clean room applications where the generation of particulates from the conveyor are a concern. In these applications the correct installation and application of the conveyor is critical to the proper running of the conveyor and minimizing the dust generated by the conveyor belt or modular belt. The end user must ensure that the conveyor belts are properly tracked and product accumulation is minimized to providing minimal dust generation.

All of the FlexMove products are designed and constructed to be used in clean room environments. The following FlexMove Series products have gone through third party testing and certification and are certified for use in ISO Standard 14644-1 Class 5 and Federal Standard 209 Class 100 Clean Room applications.

1100 Series Belted Conveyor
FlexMove Series Flexible Chain Conveyor
FlexMove Stainless Series Conveyor
2200 Series Modular Belted Conveyor
2200 Series Belted Conveyor
2200 Series Precision Move Conveyor
3200 Series Belted Conveyor
3200 Series Modular Belted Conveyor
3200 Series Precision Move Conveyor

Contact the factory for copy of the certification.

Slide Rail Specifications / Application Data

J[InHi (	@ ML',/ @ ML',/E	@ ML',/O	@ ML',/=>	@ ML',/N	@ ML',/J	@ ML',/R
Material	HDPE	UHMW	Antistatic HDPE	PAPE	PVDF	Impregnated UHMW
Color	white	white	black	Grey	White	Blue
FDA approved	Yes	Yes	No	No	No	Yes
Coefficient of Friction	0.25	0.25	0.25	0.3	0.35	0.25
Temp Range	-20 to 60 C	-20 to 60 C	-20 to 60 C	-20 to 80 C	-20 to 100 C	-20 to 60 C
Maximum Speed	50 M/min	60 M/min	50 M/min	60 M/min	60 M/min	60 M/min
Heavy Loads	poor	good	poor	excellent	excellent	good
Elongation / wear resistance	poor	good	poor	excellent	excellent	good
Chemical Resistance	Good, poor to petroleum based solvents	Good	Good, poor to petroleum based solvents	Good, not used with wet solvents	Excellent	Good
Application	General conveyance, lowest cost	High speed, moderate loads, low dust generation	Environments sensitive to static electricity	High speed, high load, dry applications only, abrasive particles	High speed, high load, abrasive particles	High speed, moderate loads, low dust generation

Chains

M_l c_m	MM	MG	M=	MO	MP
' Ã[ÆÈÕÊ ÆÉÓÃÔãÑ Ñ ì	63 mm	83 mm	103 mm	175 mm	255 mm
' Ã[ÆÈÕÊ ÆÉÓÃÔãÈÈs Ãì	2.48"	3.27"	4.06"	6.890"	10.039"
L§ÖãÁÍ§ÔãÒ¡§Ö» ÓÃÇ¡ ÓÔÇãæ Ôæ=ì	3400 N	4800 N	4800 N	4800 N	4800 N
L§ÖãÁÍ§ÔãÒ¡§Ö» ÓÃÇ¡ ÓÔÓ¬æ Ôãí ì	764 lbf	1079 lbf	1079 lbf	1079 lbf	1079 lbf
< [ěîÕÊ Úþì ÆÈ» ÓÕ§ÖãÁÍ§Ç¡ ÓÔÇãæ Ôæ=ì	500 N	1250 N	1250 N	1250 N	1250 N
< [ěîÕÊ Úþì ÆÈ» ÓÕ§ÖãÁÍ§Ç¡ ÓÔÓ¬æ Ôãí ì	112 lbf	281 lbf	281 lbf	281 lbf	281 lbf
T Úþì ÆÈ» ÓÕ§Ñ é§þ[Ôæþ§Ôãæ ì	-20 – 60°C	-20 – 60°C	-20 – 60°C	-20 – 60°C	-20 – 60°C
T Úþì ÆÈ» ÓÕ§Ñ é§þ[Ôæþ§Ôãæ ì	-4 – 140°F	-4 – 140°F	-4 – 140°F	-4 – 140°F	-4 – 140°F
< [ěÆÑ ēÑ Ôs ÚÖę§ÔÚþÔãé §§} ÔãÑ óÑ ÆÈì	58 m/min	58 m/min	58 m/min	58 m/min	58 m/min
< [ěÆÑ ēÑ Ôs ÚÖę§ÔÚþÔãé §§} ÔãÓ óÑ ÆÈì	190 ft/min	190 ft/min	190 ft/min	190 ft/min	190 ft/min
< [ěîÔs ÚÖę§ÔÚþÔ§Ö» ÓÃÔãÑ ì	30 m	30 m	30 m	30 m	30 m
< [ěîÔs ÚÖę§ÔÚþÔ§Ö» ÓÃÔãÓ	100 ft	100 ft	100 ft	100 ft	100 ft
< ÆÈÎÔæþÖÆÈ» Ôþ[} ÆãÔãÑ Ñ ì	150 mm	160 mm	170 mm	500 mm	700 mm
< ÆÈÎÔæþÖÆÈ» Ôþ[} ÆãÔãÈs Ãì	5.91"	6.30"	6.70"	19.7"	27.6"
: ÆÈì Ôãé[sÆÈ» ÔãÑ Ñ ì	25.4 mm	33.5 mm	35.5 mm	33.5 mm	33.5 mm
: ÆÈì Ôãé[sÆÈ» ÔãÈs Ãì	1.0"	1.32"	1.40"	1.32"	1.32"
' Ã[ÆÈÕÊ §ÆÃÔãé Í[ÆÈì Ôã » óÑ ì	0.75 kg/m	1.20 kg/m	1.67 kg/m	2.0 kg/m	2.43 kg/m
' Ã[ÆÈÕÊ §ÆÃÔãé Í[ÆÈì Ôãí ć´Ó	0.50 lb/ft	0.81 lb/ft	1.12 lb/ft	1.344 lb/ft	1.633 lb/ft
< [ěîÕÊ §ÆÃÔÕÚÖÔs ÚÖę§ÔÚþÔã » óÑ ì	30 kg/m	60 kg/m	60 kg/m	65 kg/m	65 kg/m
< [ěîÕÊ §ÆÃÔÕÚÖÔs ÚÖę§ÔÚþÔãí ć´Ó	20 lb/ft	40 lb/ft	40 lb/ft	44 lb/ft	44 lb/ft
3Ó§Ñ ÕÊ ÆÉÓÃÔãÑ Ñ ì	15-140 mm	20-200 mm	25-300 mm	50-400 mm	80 – 500 mm
3Ó§Ñ ÕÊ ÆÉÓÃÔãÈs Ãì	0.6 – 5.5"	0.8-7.9"	1.0-11.8"	2.0 – 15.4"	3.2 – 19.7"

Drive Unit Specifications

) ÏáÄsóÔ) ãÏğÄãëÓÏc

	MM	MG	M=	MO	MP
Number of Teeth on sprocket	16	12	12	12	12
Chain Pitch (mm)	25.4	33.5	35.5	33.5	33.5
Max. Traction force (N)	500	1250	1250	1250	1250
Sprocket Diameter (mm)	128	128	135	128	128

Stand Location

Maximum Distances:

1 = 914 mm (36 in)

2 = Should be between 1800-2400 mm (6-7.8 ft)*

* For conveyors longer than 3000 mm (10 ft), install support at joint.

Note: Additional support required on 180° curve modules.

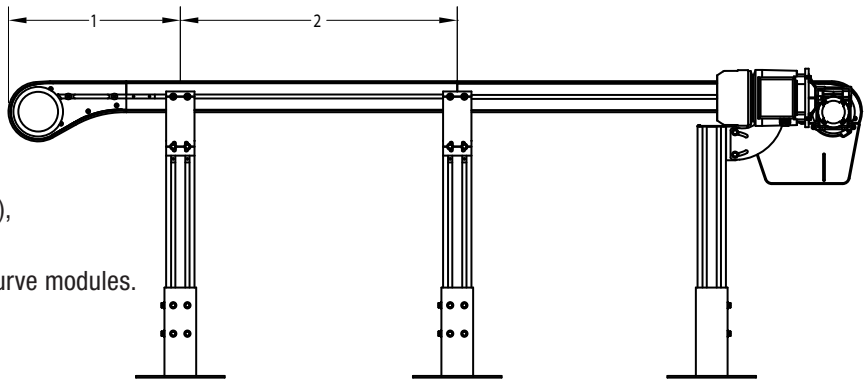

Support must be provided directly at drive end. See accessories for Direct Mount and Suspended Mount support options.

Conveyor Drive Shaft Tolerances:

I j mc h[f ; or dc[l s Mb[`n

ê¡ ðÑ ŃôJÍ [Éc

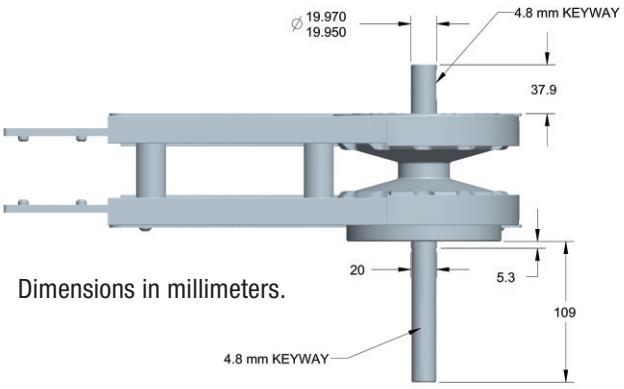

Dimensions in millimeters.

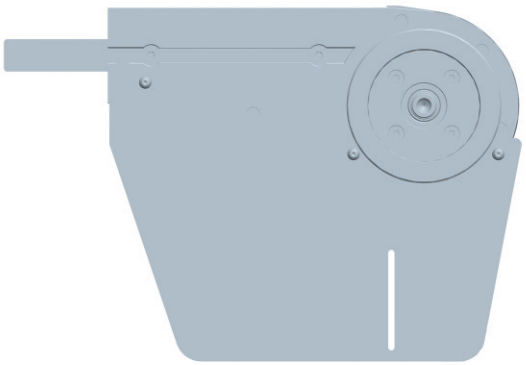

Conveyor Load Capacity

There are several factors that affect the overall conveyor load of the FlexMove conveyor. These include:

- Conveyor size and configuration
- Conveyor speed
- Application temperature
- Product accumulation
- Number of starts and stops per hour
- Maximum Drive Unit Output

Located online at www.dornerconveyors.com is the Dorner conveyor configuration tool, DTools. This tool allows you to configure your conveyor layout and determine the maximum load capacity for the conveyor. It is suggested that this program be used to calculate the conveyor load as the calculation is quite complicated. This configuration program however does not take into account temperature, dirty conditions, and conveyor starts and stops. If these conditions are part of your application, please use the load reducing factors as shown below.

Maximum Load = (Load from DTools) (Temperature Factor) (Start/Stop Factor)
See following pages for factors.

Nominal Maximum Load

A Nominal Maximum Load may be calculated without the use of DTools to determine if the conveyor can generally carry the application load. The following process can be used to calculate Nominal Maximum Load. It **does not** take into account the conveyor configuration. Please confirm your maximum load per application with the Dorner DTools program at www.dornerconveyors.com.

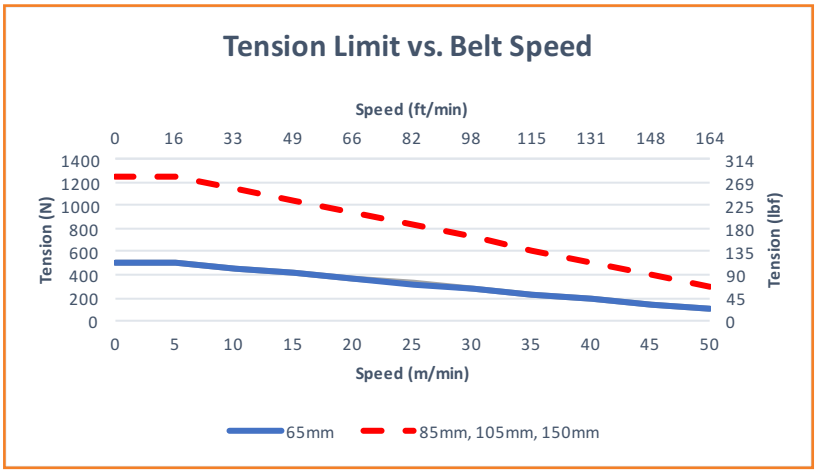

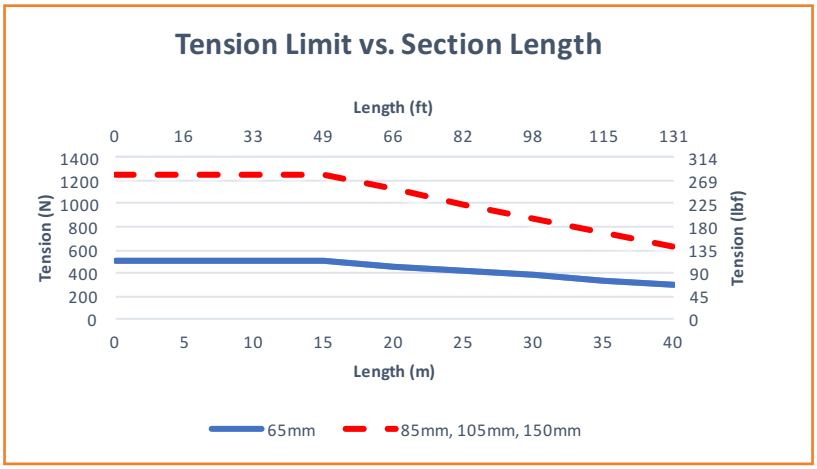

To calculate the Nominal Maximum Load:
Note: This does not include conveyor configuration. Please confirm load with Dorner online DTools configurator.

1. Determine your Basic Tension Limit from the above two graphs. The Basic Tension Limit is the lesser number of the two. Compare your tension limit to drive unit output. Your tension limit is the smaller.
2. Tension Limit = (Basic Tension Limit) (Temperature Factor) (Start/Stop Factor) (Accumulation Factor) (0.7)
   See following pages for factors.
3. Nominal Maximum Load (kg) = (Tension Limit / Chain Coefficient of Friction) - (Conveyor length) (2) (Chain weight)

Nominal Maximum Load (lbs) = (Nominal Maximum Load (kg)) (2.2)
See following pages for Chain Coefficient of Friction. Nominal Maximum load may also be limited by available gearmotors. Conformation of gearmotor torque is required. See pages 66-67 for gearmotors available. Nominal Maximum load cannot exceed overall conveyor load limit of 300 lbs (136kg) for 65 mm wide and 600 lbs (273kg) for 105 mm and 150 mm wide.

Nominal Maximum Load *(continued)*

Example:

105 mm FlexMove by 20 meters total length running at 15 Meters/min. Accumulated load with dry metal parts running in a 40°C environment. Continuous running.

- Basic Tension Limit – Tension vs. Speed = 1050N
- Basic Tension Limit – Tension vs. Length = 1100N
- Therefore Basic Tension Limit = 1050N
- Tension Limit = (Basic Tension Limit) (Temperature Factor) (Start/Stop Factor) (Accumulation Factor) (0.7)
- Tension Limit = (1050) (0.9) (1.0) (0.5) (0.7) = 330N
- Nominal Maximum Load (kg) = (Tension Limit / Chain Coefficient of Friction) - (Conveyor length) (2) (Chain weight)
- Nominal Maximum Load (kg) = (330 / 0.3) - (20) (2) (16.4) = 1100 - 984 = 116 kg
- Nominal Maximum Load (lbs) = 116*2.2 = 256 lbs

Temperature Factor

Ambient temperature can negatively affect the tension capacity of the conveyor chain.

Temperature (°F)	Temperature (°C)	Temperature Factor
-4	-20	1.0
32	0	1.0
68	20	1.0
104	40	0.9
140	60	0.8

Start / Stop Factor

Frequent Start / Stops of the conveyor can negatively affect the tension capacity of the conveyor chain. All start / stop applications must use a soft start mechanism such as a Frequency Inverter with a 1 second acceleration cycle.

Application Condition	Start / Stop Factor
Continuous Run or 1 start/stop per hour	1.00
Maximum 10 starts/stop per hour	0.83
Maximum 30 starts/stop per hour	0.70
Greater than 30 starts/stop per hour	0.62

Accumulation Factor

Product accumulation greatly reduces the conveyor load capacity. Product accumulation may only be done with the plain chain. Based on the product being accumulated apply the below Accumulation Factor in determining your Nominal Maximum Load. All factors below are assuming dry conditions.

Product Being Accumulated	Typical Coefficient of Friction	Accumulation Factor
Steel	0.25	0.50
Glass	0.20	0.60
Aluminum	0.25	0.50
Plastic	0.25	0.50
Wood	0.30	0.40
Paper and Cardboard	0.30	0.40

Chain Coefficient of Friction

The following table provides the coefficient of friction between the standard UHMW wearstrips and the Acetal chain. Coefficient of friction as shown may be reduced by addition of a lubricant.

Application Condition	Coefficient of Friction
Dry	0.30
Water Lubrication	0.27
Coolant Lubrication	0.20
Oil Lubrication	0.20

>lqp_ Ohcnl orj on=[j [] cns&J"Q #l_kod_g _hn^_j _h^ i h4

- Traction force F (N)
- Chain speed V (m/min)

To calculate power, the equation is P = 1/60 (F x V)

There are several drive unit designs, the maximum permissible traction force on each type of drive unit as below:

>lqp_ ohcnnsj _	G[rcg og nl[] mi h`i l] _ dn H_qni h "H#				
	SS	SM	SC	SU	SV
End	500	1250	1250	1250	1250

Conveyor Noise Level

The actual noise level generated by the conveyor depends on several factors; the installation configuration, the product running on the conveyor, the surrounding equipment, the conveyor options and chain speed. The noise level generated by the conveyor is typically less than the general noise level of factory equipment.

Generally, a higher speed chain will result in a higher noise level. In addition, 65 mm conveyors will run slightly quieter, and power transfer tails will add a few decibel points as well. The following charts provide basic decibel ratings for typical conveyor arrangements, such as wheeled and plain bend corners, and power transfers.

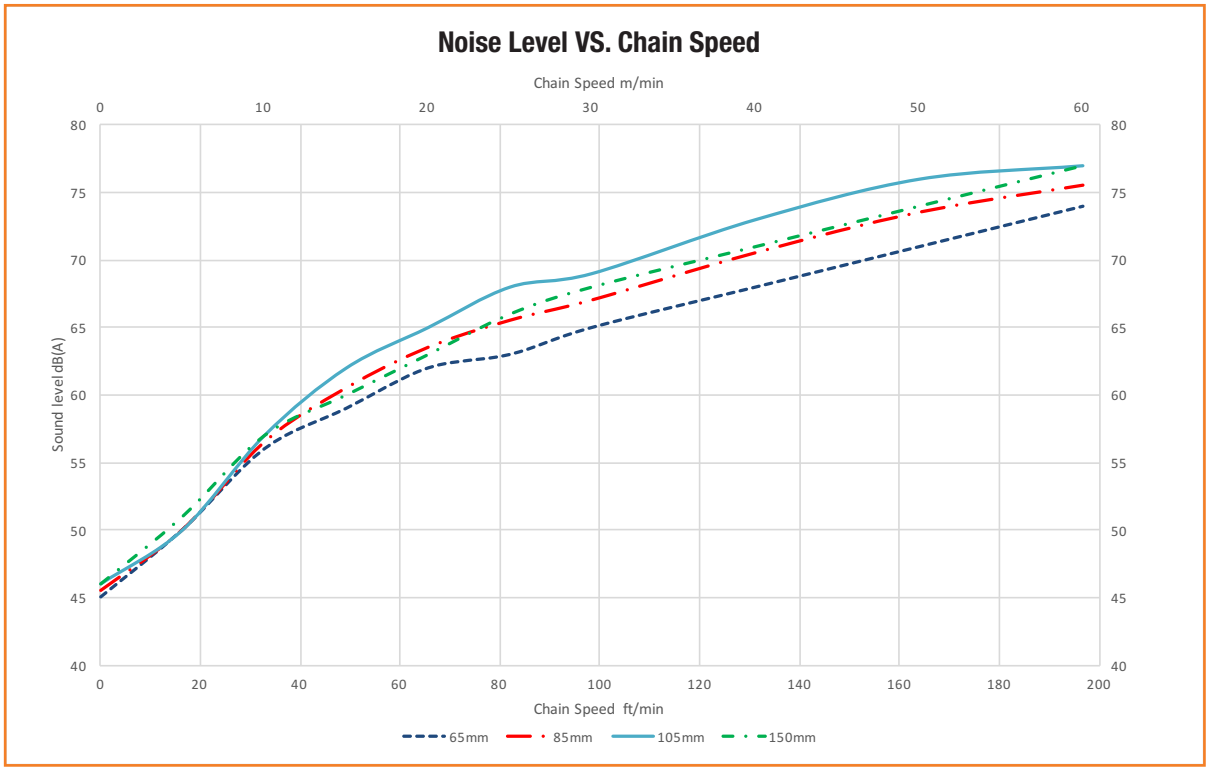

Decibel ratings are taken approximately 3 feet away from the conveyor modules.

Bend Factors

Bend factors must be considered and calculated at every plain chain. It depends on the angle of the bend α in radians and friction coefficient μ between chain and slide rails. In application when conveyor is dry and clean, the friction coefficient μ is close to 0.1.

The bend factor is important to calculate since the frictional force of a plain bend depends not only on the weight of chain and product but also the actual the tension throughout the bend. The result an additional pressure force of the chain towards the conveyor beam directed toward the center of the bend. Since the chain tension varies throughout the conveyor, calculation of this additional pressure force is complicated. The highest values are present at the pulling side of the drive unit and virtually zero at the chain inlet. Using bend factor is the easiest way of including added friction in the plain bend for both horizontal and vertical into the calculation. Always use wheel bend unless for exceptional cases. If using plain bend is a must, the combined plain bends angle should not more than 180°, unless it is for a very short and light application.

<_h^ rsj _&bi ldi hr[f i l p_lrj [f j f[dh \ _h^	<_h^ `[ ] ri l
30°1	.2
45°	1.3
60°1	.4
90°1	.6

8° inclined is the maximum a product could convey for plain chain whereas friction top chain could take up to 30°

Material

G[n_ld f	@C rGi p_ J[lrm
POM (PolyOxyMethylene)	Conveyor Chain, rollers
POM Conductive (PolyOxyMethylene)	Conductive chain
Aluminum, extruded & anodized	Angle bracket, beam support bracket, conveyor beam, support beam, guide rail, distance tube, fixed and adjustable side guide bracket, spacer
Steel, electro-zinc plated	Bolts and nuts, connecting strips, foot connecting strip
Steel, powder coated	Foot, connecting plate
PA, Polyamide	Chain pivot, side guide bracket, side guide support, drive and idler steering guide, end caps, wheel guide
Polyamide PA + Glass fiber	Drive sprocket, idler wheel
PVC, Polyvinyl Chloride	T-slot cover
HDPE, High Density Polyethylene	Slide rail, guide rail
UHMW-PE, Ultra High Molecular Weight Polyethylene	Slide Rail, drive and idler steering guides
PVDF, Polyvinylidene fluoride	Slide Rail
TPE, Thermoplastic Elastomer	Chain insert for friction top and wedge top

Resistance to Chemical

FlexMove® components can withstand continuous contact with most chemicals. However, it is recommended to avoid:

- Acids with pH less than 4
- Bases with pH higher than 9

The following table specifies the resistance of several material used in the conveyor on selected chemicals

F_a_h^

1 = Very good
2 = Good
3 = Moderate resistance
4 = Not recommended
5 = No data available

G[n_lq[f	;]_r[f JI G	Jifs[gc^_ J;	Bcab'^_hmrs Jifs_rbsf_h_ B>J?	Nb_lgijf[mnq ?f[mnig_l NJ?	;fogchog ;F
sJEay					
Acetic acid	3	4	3	-	2
Benzoic acid	3	4	1	-	4
Citric acid	3	2	2	-	2
Chromic acid	4	4	1	-	3
Hydrofluoric acid	4	4	1	-	4
Hydrochloric acid	4	4	1	-	3
Hydro cyanic acid	4	4	2	-	1
Nitric acid	4	4	4	-	3
Phosphoric acid	4	4	1	-	3
Sulphuric acid	4	4	2	1	3
Tartaric acid	3	2	1	-	1
&[ãÆGSÚÑéÚëÖ]ãy					
Ammonia	1	2	1	-	2
Calcium hydroxide	1	2	1	-	4
Caustic soda	1	2	1	1	3
Potassium hydroxide	1	2	1	-	4
J[íGay					
Potassium bicarbonate	2	2	2	-	1
Potassium permanganate	2	4	2	-	1
Sodium cyanic	2	2	2	-	4
Sodium hydrochloride	3	4	1	-	4
Acid salt	2	3	1	-	-
Basic salt	1	2	1	-	-
Neutral salt	1	2	1	-	-

Chains

G[n_lq[f	;]_r[f JI G	Ji fs[g c^_ J;	Bcab'^_hmns Ji fs_rbsf_h_ B>J?	Nb_lg i j f[mnq ?f[mni g _l NJ?	;fog chog ;F
?Þ»[ÖæŒŠÚÑéÚëÖ} āÇ Ö} ÇàÚíęŞÖŒay					
Acetone	1	1	4	3	1
Benzene	1	1	4	3	1
Butyl alcohol	2	2	2	-	1
Carbon disulphide	1	1	3	-	1
Chloroform	1	1	4	-	-
Ethyl acetate	1	1	2	-	1
Ethyl alcohol	1	1	1	-	1
Heptane	2	2	2	-	-
Methyl alcohol	1	1	1	-	2
Methyl ethyl ketone	1	1	4	4	2
Nitrobenzene	2	2	3	-	1
Phenol	3	3	2	-	1
1[āāŞāy					
Carbon dioxide	3	1	1	-	1
Carbon monoxide	2	1	1	-	1
Chlorine	2	4	3	-	1
Hydrogen sulphide	3	1	2	-	1
Sulphur dioxide	2	3	2	-	1
?ÖÃŞþāy					
Beer	1	2	2	-	1
Fruit juices	1	2	3	-	2
Gasoline	1	2	2	-	1
Milk	1	1	2	-	1
Oil	1	1	2	-	1
Vinegar	1	2	3	-	1

Note: the table above is valid for temperature range up to 60°C and it is to be considered as guideline only. Furthermore, precautions should be taken when using cleaning agents. If you are in doubt on the material to withstand your special environment, you should go for chemical testing or contact our local distributor.

Static Electricity

The standard plastic materials used for conveyors have low electrical conductivity so static electricity can build up in the conveyor. When a conveyor is running under normal environment (20°C and humidity 60%) without load, the static electricity build up should be around the following figures:

Above the drive unit	1800-2500V
Idler end	400-500V
Above the wheel bend	400-500V
Above the straight section	250-350V

With the introduction of anti-static material for slide rail and chain, it shall meet the requirement for electronic industry.

PRODUCT SUMMARY

FlexMove® STAINLESS SERIES

FlexMove® Stainless Steel Conveyors are best for:

- Part Handling
- Tight Spaces
- Buffering
- Elevation Changes
- Accumulation
- Long Lengths
- Complex Configurations
- Caustic & Corrosive Environments
- Curves, Jogs, Inclines, Declines

Sizes & Measurements

- Widths: 65 mm, 85 mm, 105 mm, 180 mm and 260 mm
- Lengths: up to 30 m (98 ft)

Loads & Speeds

- Loads up to 65 kg/m (44 lbs/ft)
- Speeds: up to 58 mpm (190 fpm)

Plastic Chain Types

- Standard: Low Friction & Friction Top Inserts
- Specialty
  - Conductive
  - Cleated
  - Hardened Steel Top
  - Roller Top
  - Magnet Top
  - And Many More

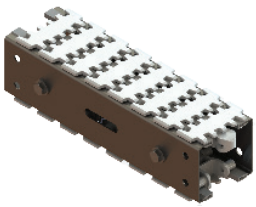

Flat

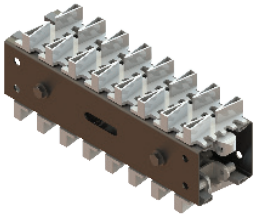

Cleated

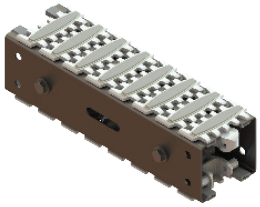

Friction Top

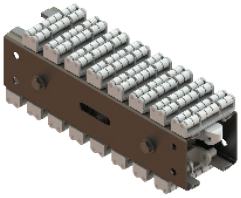

Roller Top

Modules

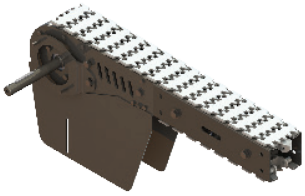

Drive Tail

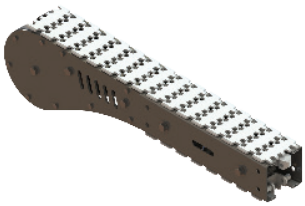

Idler Tail

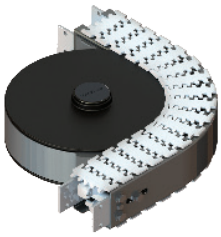

Curves from 15° to 180°

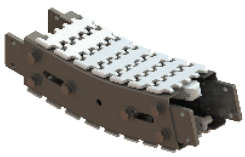

Inclines/Declines from 5° to 90°

Support Stands

- Tripod Supports
- Horizontal & Adjustable Angle Supports also available

Guiding

- Fully Adjustable
- Adjustable Width/Height
- Twin Rail
- Overhead Guide

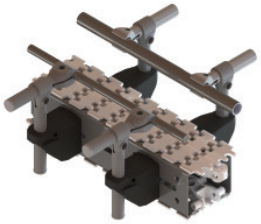

Industrial & Automation Conveyors

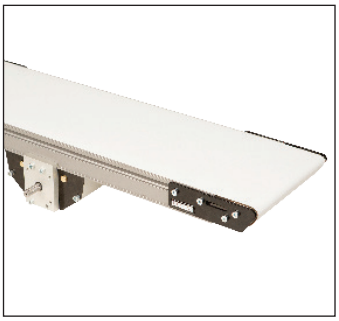
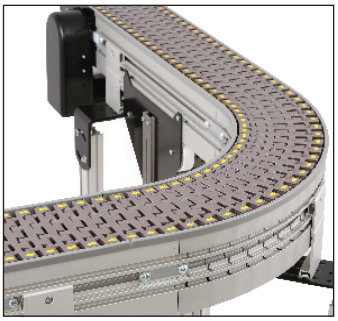
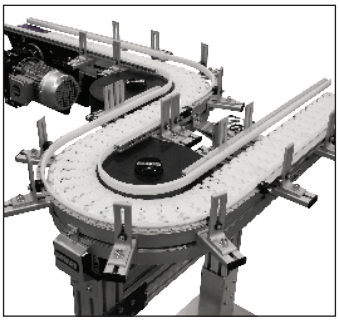
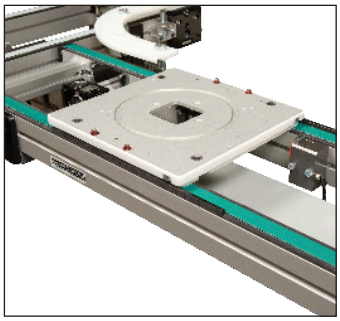

Sanitary Conveyors

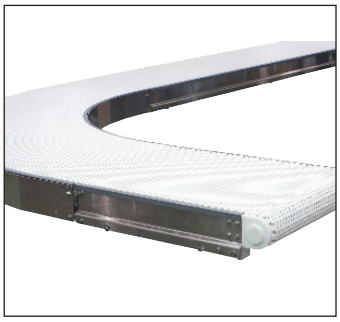
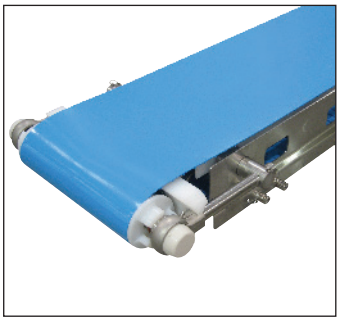

Engineered Solutions

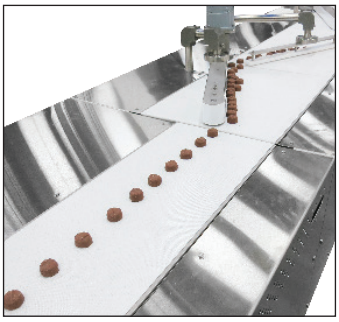
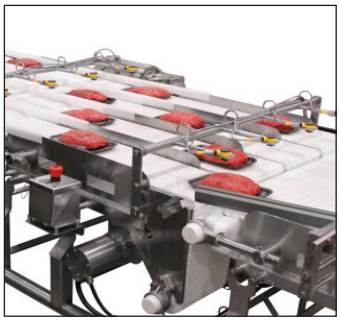

Parts

Service

Online Configurator

Warranty

Transforming Conveyor Automation

Dorner – Asia

128 Jalan Permatang Damar Laut, Bayan Lepas 11960
Penang, Malaysia
+604-626-2948 | info.asia@dorner.com

Dorner GmbH – Europe

Dorner – Germany
Karl-Heinz-Beckurts-Straße 7
52428 Jülich,
Germany
+49 (0) 2461/93767-0
info.europe@dorner.com

Dorner – France
8 rue des Frères Caudron
78140 Velizy-Villacoublay
France
+33 (0)1 84 73 24 27
info.france@dorner.com

Dorner – North & South America

Dorner – U.S.A. Headquarters
975 Cottonwood Ave
Hartland, WI 53029, USA
(800) 397-8664
(262) 367-7600
info@dorner.com

Dorner – Canada
100-5515 North Service Road
Burlington, Ontario L7L 6G6
Canada
(289) 208-7306
info@dorner.com

Dorner – Latin America
Carretera a Nogales #5297,
Nave 11. Parque Industrial Nogales
Zapopan, Jalisco C.P. 45222
Mexico
+52.33.30037400
info.latinamerica@dorner.com

DORNER®

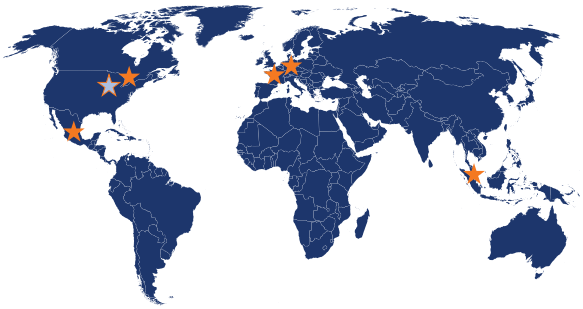

www.dornerconveyors.com

© Dorner Mfg. Corp. 2021. All Rights Reserved. 851-917-AS-EN 0621